This is a digital copy of a book that was preserved for generations on library shelves before it was carefully scanned by Google as part of a project to make the world's books discoverable online.

It has survived long enough for the copyright to expire and the book to enter the public domain. A public domain book is one that was never subject to copyright or whose legal copyright term has expired. Whether a book is in the public domain may vary country to country. Public domain books are our gateways to the past, representing a wealth of history, culture and knowledge that's often difficult to discover.

Marks, notations and other marginalia present in the original volume will appear in this file - a reminder of this book's long journey from the publisher to a library and finally to you.

Usage guidelines

Google is proud to partner with libraries to digitize public domain materials and make them widely accessible. Public domain books belong to the public and we are merely their custodians. Nevertheless, this work is expensive, so in order to keep providing this resource, we have taken steps to prevent abuse by commercial parties, including placing technical restrictions on automated querying.

We also ask that you:

+ *Make non-commercial use of the files* We designed Google Book Search for use by individuals, and we request that you use these files for personal, non-commercial purposes.

+ *Refrain from automated querying* Do not send automated queries of any sort to Google's system: If you are conducting research on machine translation, optical character recognition or other areas where access to a large amount of text is helpful, please contact us. We encourage the use of public domain materials for these purposes and may be able to help.

+ *Maintain attribution* The Google "watermark" you see on each file is essential for informing people about this project and helping them find additional materials through Google Book Search. Please do not remove it.

+ *Keep it legal* Whatever your use, remember that you are responsible for ensuring that what you are doing is legal. Do not assume that just because we believe a book is in the public domain for users in the United States, that the work is also in the public domain for users in other countries. Whether a book is still in copyright varies from country to country, and we can't offer guidance on whether any specific use of any specific book is allowed. Please do not assume that a book's appearance in Google Book Search means it can be used in any manner anywhere in the world. Copyright infringement liability can be quite severe.

About Google Book Search

Google's mission is to organize the world's information and to make it universally accessible and useful. Google Book Search helps readers discover the world's books while helping authors and publishers reach new audiences. You can search through the full text of this book on the web at `http://books.google.com/`

THE

EXECUTIVE DOCUMENTS

OF THE

HOUSE OF REPRESENTATIVES

FOR THE

FIRST SESSION OF THE FIFTY-FIRST CONGRESS.

1889-'90.

WASHINGTON:
GOVERNMENT PRINTING OFFICE.
1890.

A 19139

LELAND STANFORD JUNIOR
LIBRARY
UNIVERSITY.

INDEX TO EXECUTIVE DOCUMENTS OF HOUSE OF REPRESENTATIVES.

CONTENTS OF THE VOLUMES.

Vol. 1..FOREIGN RELATIONS: No. 1, pt. 1.
Vol. 2..WAR: No. 1, pt. 2, v. 1.
Vol. 3.. ENGINEERS: No. 1, pt. 2, v. 2, pt. 1.
Vol. 4.. ENGINEERS: No. 1, pt. 2, v. 2, pt. 2.
Vol. 5.. ENGINEERS: No. 1, pt. 2, v. 2, pt. 3.
Vol. 6.. ENGINEERS: No. 1, pt. 2, v. 2, pt. 4.
Vol. 7.. ORDNANCE: No. 1, pt. 2, v. 3, and SIGNAL: No. 1, pt. 2, v. 4, pts. 1 and 2.
Vol. 8..NAVY: No. 1, pt. 3, v. 1.
Vol. 9.. No. 1, pt. 3, v. 2.
Vol. 10..POSTMASTER-GENERAL: No. 1, pt. 4.
Vol. 11..INTERIOR: No. 1, pt. 5, v. 1.
Vol. 12.. No. 1, pt. 5, v. 2.
Vol. 13.. No. 1, pt. 5, v. 3.
Vol. 14.. GEOLOGICAL SURVEY: No. 1, pt. 5, v. 4.
Vol. 15.. EDUCATION: No. 1, pt. 5, v. 5.
Vol. 16 ..DISTRICT OF COLUMBIA: No. 1, pt. 6.
Vol. 17..AGRICULTURE: No. 1, pt. 7.
Vol. 18..Nos. 1, pt. 8, and Nos. 4 and 7.
Vol. 19 ..No. 2, FINANCE REPORT.
Vol. 20 No. 3, parts 1 and 2, Currency Report.
Vol. 21..Nos. 5, 174, and 394, Estimates.
Vol. 22..No. 6, part 1, Commerce and Navigation.
Vol. 23..No. 6, part 2, Internal Commerce.
Vol. 24..Nos. 8 to 39, inclusive, except No. 14.
Vol. 25..No. 14, Tests of Iron and Steel.
Vol. 26..Nos. 40 to 105, inclusive, except No. 55.
Vol. 27..No. 55, Coast Survey, 1889.
Vol. 28..Nos. 106 to 140, inclusive, except No. 113.
Vol. 29..No. 113, Contracts for Carrying the Mails.
Vol. 30..No. 113, pt. 2, Fines and Deductions.
Vol. 31..Nos. 141 to 212, inclusive, except No. 174.
Vol. 32..Nos. 213 to 263, inclusive.
Vol. 33..No. 264, parts 1 and 2.
Vol. 34..Nos. 265 to 294, inclusive.
Vol. 35..Nos. 295 to 391, inclusive, except No. 336.
Vol. 36..No. 336. Report Commissioner of Labor.
Vol. 37 Nos. 392 to 470, inclusive, except Nos. 394, 410, 436, and 437.
Vol. 38..No. 410, part 1 } Paris Exposition.
Vol. 39..No. 410, part 2 }
Vol. 40..No. 410, part 3 }
Vol. 41..No. 410, part 4 }
Vol. 42..No. 410, part 5 }
Vol. 43..No 436, Treasurer's Accounts, 1889.
Vol. 44..No. 437, Commercial Relations, 1887-'88.

INDEX TO THE DOCUMENTS.

Subject.	No.	Vol.
A.		
Agriculture, Secretary of, communications from:		
Annual Report of, for 1889.....[Part 7].	1	17
North Dakota Experiment Station, in reference to an appropriation for	423	37
Silk culture, report upon the operations of the Women's Silk Culture Association	110	28
Statement of expenditures of Agricultural Department for year ended June 30	104	26
Agricultural Experiment Station:		
Letter from the Secretary of Agriculture in reference to an appropriation for the North Dakota	423	37
Alaska:		
Estimate from Secretary of the Interior of an appropriation for the purchase and maintenance of a steam vessel for use of the civil authorities of	93	26
Appropriation to repair Government building at Sitka	146	31
	288	34
Estimate from the Secretary of the Navy of an appropriation for the erection of marine barracks at Sitka	103	26

A 19139

LELAND STANFORD JUNIOR
LIBRARY
UNIVERSITY.

Subject.	No.	Vol.
Alaska—Continued.		
Estimate of Secretary of the Treasury for the maintenance of the refuge station at Point Barrow	249	32
Letter from the Secretary of the Treasury recommending an appropriation for the establishment of a light and fog-signal at St. Mary's Island	259	32
Compulsory school attendance in	321	35
Increase in estimate of Secretary of Interior for the education of children in, for 1891	303	35
Alien contract labor law, number of suits under	206	31
Allen, J. B., amended estimate from Attorney-General to compensate	391	35
Alloway Creek, New Jersey, reports upon survey of	60	26
American cemetery, Acapulco, Mexico, communication from Secretary of State, reqesting an appropriation for the improvement of the	317	35
Angel Island Quarantine Station, California, increased estimate of Secretary of the Treasury of appropriation for the	154	31
Ante bellum mail service, etc., letter from Secretary of the Treasury transmitting certain claims for, and of the Pere Marquette Railroad Company and Pacific Mail Steamship Company	418	37
Appoquinimink Creek, Delaware, report of survey of	19	24
Appropriations:		
Estimate of Secretary of Treasury for service of fiscal year ending June 30, 1891	5	21
Military Academy, estimate from the Secretary of War of, for the	159	31
Estimates of Secretary of the Treasury of deficiencies for year 1890 and prior years	174	21
Army	262	32
Letter from Secretary of the Treasury concerning bill (H. R. 3823) to repeal laws relating to permanent and indefinite	274	34
Letter from the Commissioner of Pensions, asking an appropriation for thirty medical examiners	329	35
Supplemental estimates of, required for the various Departments for fiscal year ending June 30, 1890, and prior years	394	21
Indian appropriation bill	405	37
Letter from the Secretary of Agriculture in reference to an appropriation for the North Dakota experiment station	423	37
Arizona, laws of fifteenth legislative assembly	109	28
Arkansas and Mississippi, undelivered land patents in	416	37
Army:		
Appropriations for the support of the	262	32
Estimate from the Secretary of War of a deficiency in the appropriation for pay of the	236	32
Estimate of Secretary of War of deficiency in appropriation for pay, etc., of the	430	37
Petitions for increase in pay of noncommissioned officers of the staff	170	31
	245	32
	324	35
	277	34
	295	35
Petitions of veteran privates of the, for a reduction in the limit of thirty years for retirement	319	35
Relative to regular supplies, Quartermaster's Department	292	34
Reports of purchases of supplies for use of the, for 1889	256	32
Relative to lineal promotions in the	326	35
	424	37
Petitions to reorganize the band of the United States Military Academy	446	37
Report relative to purchasing instruments for heavy artillery practice	73	26
Estimate of Secretary of War of a deficiency in the appropriation for pay, etc., of the	348	35
Transmitting letter relating to mileage of officers of the	399	37
Army Gun Factory, increased estimate from Secretary of War for machinery and plant at the	214	32

Subject.	No.	Vol.
Arnoux, W. H., request of Secretary of the Navy for an appropriation for compensating for services as counsel	314	35
Arrears of pay and bounty for volunteers, estimate of the Secretary of the Treasury of appropriation for	116	28
Arsenals, letter from Secretary of War relating to estimates of appropriations for the, at Indianapolis, Ind., and at West Troy, N. Y.	193	31
Artificial limbs, estimate of the Secretary of War of deficiency in the appropriation for	228	32
Atlantic and Pacific Railroad Company, estimate from the Secretary of the Interior for survey of the land grant to the	250	32
Attorney-General, communications from:		
Annual Report of	7	18
Contract labor law, number of suits under	206	31
Courts of the United States, estimates of expenses of	362	35
Claims for witness fees, Department of Justice	192	31
District of Columbia, number of persons arrested for murder, manslaughter, etc., in the	266	34
Oklahoma Territory, compensation of marshals for services in	421	37
Sitka, Alaska, appropriation to repair Government building at	146 288	31 34
Sioux City, Iowa, office for district clerk at	411	37
Texas, employment of counsel, etc., in the prosecution of suit relating to Greer County	404	37
Tuthill, Richard H., claim of	434	37
United States, judgment in cases against the	337	35
Aquia Creek, Virginia, report of survey of	135	28
B.		
Barge Office at New York, letter from the Secretary of the Treasury, requesting that the sum of $20,000 be appropriated to cover the cost of repairs on the	350	35
Beaufort River, North Carolina, report upon survey of	42	26
Beet-sugar taxes, letter from the Acting Secretary of State relative to tariffs of Austria-Hungary, Germany, and France on, and export bounties	191	31
Belfast Harbor, Maine, reports upon survey of	81	26
Beverly Harbor, Massachusetts, report upon survey of	27	24
Big Black River, Mississippi, improvement of	216	82
Bishop & Co., communication from Secretary of State in relation to an appropriation to pay the claim of	231	32
Blinn, Richard F., claim of	130	28
Board of Pension Appeals, letter from the Secretary of Interior relative to an increase in the number of members of the	141	31
Boeing, William, for the relief of	133	28
Bradford, Commander Royal B., estimate of Secretary of the Interior of an appropriation to compensate	244	32
Breadstuffs and provisions, message relating to importations of	392	37
Brown's Creek, New York, report upon survey of	22	24
Buildings for garrison purposes, estimate from Secretary of War of appropriation for	162	31
Bureau of Engraving and Printing:		
Estimates of appropriations for additional buildings for use of the	235	32
Request of the Chief of the, for an additional appropriation for compensation of employés on account of overtime work	304	35
Bureau of Pensions, transfer of, to the War Department	296 300	35 35
Bureau of Statistics:		
Twelfth number of Statistical Abstract, prepared by the	13	24
Request of Secretary of the Treasury for a provision in legislative appropriation bill for employment of a special statistical clerk in the	163	31
Burial lots for Fort Porter, estimate from Secretary of War of an appropriation for the purchase of, in Forest Lawn Cemetery, New York	47	26
Byrne, Edward, relative to reinstatement of, as captain of cavalry	233	32

Subject.	No.	Vol.
C.		
Cadet Hospital, West Point, letter from Secretary of the Treasury transmitting an estimate from Secretary of War of appropriation to change the plumbing in the	349	35
Cape Charles City, Va., report upon survey of harbor of	29	24
Carlisle, Pa.:		
Estimate of Secretary of Interior for buildings, etc., for Indian school at	221	32
Caswell, T. T., request of Secretary of the Navy for authority of Congress to relieve Pay Inspector, U. S. Navy, of checkage against his account	232	32
Cedar Bayou, Texas, reports upon survey of bar at mouth of	84	26
Cemeteries, Acapulco, Mexico, communication from the Secretary of State requesting an appropriation for improvement of the American cemetery at	317	35
Chapin, E. E., letter from Attorney-General submitting the claim of, as assistant attorney, eastern and western districts, Wisconsin, for appropriation	441	37
Chargé d'affaires *ad interim*, letter from Secretary of State relative to a deficiency appropriation for salaries of	225	32
Cherokee Indians, appropriation to negotiate with the	400	37
Chesapeake Bay, right of way of vessels in channel in and from, to Baltimore	339	35
Chester River, Maryland, reports upon survey of	65	26
Chickahominy River, Virginia, reports upon survey of	41	26
Chickamauga Battlefield, estimate from Secretary of War for an appropriation of $3,000 for maps of	175 442	31 37
Chief clerk General Land Office, letter from Secretary of Interior recommending an increase in the salary of the	142	31
Chief of Engineers:		
Annual Report of, Part 1, vol. 2 [Part 2]	1	3
Part 2, vol. 2 [Part 2]	1	4
Part 3, vol. 2 [Part 2]	1	5
Part 4, vol. 2 [Part 2]	1	6
Chief of Ordnance, Annual Report of [Part 2]	1	7
Chincoteague Inlet, Virginia, report on improvement of	207	31
Chippewa Indians in Minnesota, for the relief and civilization of the	247	32
Cigars, recommendation of Commissioner of Internal Revenue of certain amendments to existing laws taxing manufacturers of	363	35
Civilian engineers, statement of, for 1889	118	28
Civil officers, letter from the Secretary of the Treasury transmitting draft of a bill "To limit and define the term of all of the United States, appointed for a fixed term"	335	35
Civil Service Commission:		
Sixth report of the United States [Part 8]	1	18
Supplemental estimate of the, for salaries, etc., in the office of the	301	35
Claims:		
List of, allowed under act of July 4, 1864, since January 17, 1889	126	28
Schedule of, allowed by the accounting officers of the Treasury under appropriations balances of which have been exhausted or carried to the surplus fund	144	31
List of all, allowed by accounting officers of the Treasury, enumerated in House Ex. Docs. Nos. 55 and 153, Forty-eighth Congress, second session	314	35
Relating to an appropriation to pay the, of the Seneca Indians	340	35
Of certain States on account of "refunding to States expenses incurred in raising volunteers"	413	37
Clerical force for Second Auditor's Office, letter from Second Auditor recommending an appropriation for ten additional clerks	433	37
Clerical force, applications from Third and Fourth Auditors for increased	440	37
Coast and Geodetic Survey:		
Estimate of deficiencies in the appropriations for service of the, for fiscal year 1890	46	26
Annual Report for 1889	55	27
Statement of expenditures on account of the, for fiscal year ended June 30, 1889	90	26

Subject.	No.	Vol.
Coast and Geodetic Survey—Continued.		
Letter from Secretary of the Treasury, recommending the purchase of an additional building for use of the	153	31
Coast and Geodetic Survey steamer *Gedney*, estimate of Secretary of the Treasury for repairs of the	171	31
Coaster's Harbor Island, reports upon survey of	63	26
Cocheco River, New Hampshire, reports upon survey of, from Dover to its mouth	74	26
Columbia River:		
Report upon obstructions in the	64	26
Improvement of	101	26
Columbia River, light-ship *Oregon*, estimate of additional appropriation of $10,000 to complete the	237	32
Commerce and Navigation:		
Report of Chief of Bureau of Statistics on foreign commerce	6	22
Report of Chief of Bureau of Statistics on internal commerce. [Pt. 2]	6	23
Commercial relations, annual reports from United States consuls on commerce, etc	437	44
Commissioner of Education, Annual Report of, for year 1890 (vol. 5)	1	15
Commissioners of the District of Columbia, Annual Report of the, for 1889 [Part 6]	1	16
Commissioner of Indian Affairs, Annual Report (vol. 2) [Part 5]	1	12
Commissioner of Internal Revenue, Report of, for 1889	4	18
Commissioner of Labor, Fifth Annual Report of the	336	34
Commissioner of Patents, Annual Report (vol. 3) [Part 5]	1	13
Comptroller of the Currency, Annual Report of	3	20
Consular officers, letter from Secretary of State in relation to the necessity for an immediate appropriation for salaries of	387	35
Contract labor laws:		
Letter from the collector of the port of New York in response to resolution of inquiry of the House, relative to the action of the Cunard Steamship Company refusing return passage to certain emigrants landed in violation of the	420	37
Number of suits under	206	31
Contracts for carrying the mails	113	29
Coosa River, Alabama, report of survey of	94	26
Corth, H., deceased, estate of	246	32
Court of Claims:		
List of judgments rendered by the	181	31
Additional list of judgments rendered by the	427	37
Request of Commissioners of District of Columbia for appropriation to pay judgment rendered by the, in favor of Daniel Donovan	432	37
Courts of the United States:		
Estimate of Secretary of the Interior for deficiency in the appropriations for distribution of the reports of the United States Supreme Court	179	31
Estimate of deficiency in appropriations for fees of witnesses in the, submitted by the Attorney-General	223	32
Letter from the Attorney-General relating to deficiencies in appropriations for Department of Justice	224	32
Additional estimates of Attorney-General of certain deficiencies to defray expenses of the	332	35
Statement of the Attorney-General of expenses of the, for years 1888, 1889, and 1890	338	35
Consolidated and revised statement of deficiencies to defray expenses of the, to take the place of previous estimates	368	35
Revised estimates for expenses of the, for year 1891	401	37
Estimates of deficiencies on account of expenses of	414	37
Estimates of appropriations to defray expenses of the, for 1890 and previous years	452	37
Estimate of expenses of	362	35
Estimates of deficiencies for expenses of the	467	37
Estimates of Attorney-General of appropriations for expenses of	121	28
Crane and Waters Rivers of Essex Branch, Massachusetts, report upon survey of	23	24

Subject.	No.	Vol.
Customs collection district, Laredo, Tex., letter from the Secretary of the Treasury recommending the establishment of the, in lieu of Corpus Christi	242	32
Customs duties, statement of refunds of, for fiscal year ended June 30, 1889	11	24
Customs officers, abstract of the official emoluments of	306	35
Customs revenue:		
Recommendation of Secretary of the Treasury that the annual appropriation for expenses of collecting the, be increased	263	32
Estimate of expenses of collecting the, for fiscal year ending June 30, 1891	280	34
Customs Service:		
Letter from Secretary of the Treasury transmitting report of all payments made to informers and seizing officers in the	9	24
Letter from the Secretary of the Treasury recommending that the compensation of the supervising special agent of the, be restored to $10 per day	226	32
Cypress Bayou, Louisiana, report upon improvement of	252	32
D.		
Dakota, purchase of stock cattle for Ponca Indians in	45	26
Dallas, Tex., veto of bill for addition to public building at	359	35
Damages to certain vessels, estimates from Secretary of the Navy to reimburse the owners of schooner *Rillie S. Derby* and barges *Benefactor* and *Mayflower*, for damages by collision with U. S. steamer *Juniata*	194	31
Dayton, Ohio, estimate of Secretary of the Treasury of appropriation to improve the sewerage system at the Central Branch of the Soldiers Home at	358	35
Department of Agriculture, statement of expenditures of the, for fiscal year ended June 30, 1889	104	26
Department of the Interior:		
Accounts of disbursing officers of the	417	37
Expenditure of contingent fund	117	28
Department of Justice:		
Claims for witness fees, middle district of Tennessee	192	31
Communication from Attorney-General recommending the payment of certain bills on file in the	455	37
Estimate from the Attorney-General of deficiency in the appropriation for printing and binding the	374	35
Department of Labor:		
Increased estimate from the Commissioner of labor for the rent of rooms for use of the	95	26
Department of State:		
Estimate of Secretary of State of an additional appropriation for binding manuscript papers belonging to the	275	34
Estimate of Secretary of State of deficiency for printing and binding for the	396	37
Contingent expenses of	322	35
Detroit River:		
Approximate cost of tunneling	369	35
Report upon survey of, at Grosse Point, Mich	200	31
Dickerman, A. T., claim of	371	35
Director of the Mint, report of the, upon the production of precious metals	354	35
District of Columbia:		
Report on system of sewerage existing in the	445	37
Annual report of the Commissioners of the [Part 6]	1	16
Additional estimates of deficiencies in appropriations for the service of the	428	37
Estimate of the Commissioners of the, of an appropriation to satisfy decree in the case of District of Columbia *vs.* McBlair	120	28
Letter from the Commissioners of the, transmitting for appropriation an additional list of judgments rendered against the	438	37
Number of persons arrested for murder, manslaughter, etc., in the	266	34

Subject.	Vol.	Vol.
District attorneys, letter from Secretary of the Treasury calling attention to the compensation allowed to the district-attorney for the southern district of New York	325	35
Donovan, Daniel, request of Commissioners of District of Columbia for appropriation to pay judgment rendered by the Court of Claims in favor of	432	37
Duluth, Minn., report upon survey of property donated by the city of	217	32
E.		
Eastern Branch of the Potomac River, dredging channel of the	347	35
East Point Judith, Rhode Island, reports upon survey of	66	26
East River:		
Report of survey of	169	31
Map of survey of [Part 2].	169	31
Eleventh Census:		
Estimate of Secretary of Interior of $350,000 for printing, engraving, and binding for the	49	26
Estimate from the Secretary of the Interior of the appropriation for the expenses of the	160	31
Estimate of Secretary of Interior of appropriation for printing, engraving, and binding for the	373	35
Elk River, Maryland, report of survey of	157	31
Engineer museum, letter of Secretary of War requesting an appropriation for an	222	32
Equipment of vessels, estimate from the Secretary of the Navy of deficiency in the appropriation for	180	31
Examining surgeons, estimate from Secretary of the Interior of the "fees and expenses" of	464	37
Executive Departments, useless papers in the	197	31
F.		
Finances, annual report of the Secretary of the Treasury on the	2	19
Fines and deductions: Mail contracts	113	20
First Comptroller's Office, letter of First Comptroller asking for an appropriation to pay messenger in his office for extra services	395	37
Fishing Creek, North Carolina, report of survey of	32	24
Florida, letter from Secretary of the Treasury transmitting report of Third Auditor upon the mutual demands of the State of, and the United States	68	26
Fog signal, recommendation of Secretary of the Treasury for an appropriation for, at or near the Cuckold's Island, Maine	272	34
Fond du Lac River, Wisconsin, report upon survey of	24	24
Foreign mails, contracts for	458	37
Foreign relations, annual report on	1	1
Fortifications, estimate of Secretary of War of appropriation for armament of	147	31
Fort Douglas, Utah, submitting draft of bill relating to water supply at	76	26
Fort Myer Military Post, estimate from Secretary of War of appropriation for	161	31
Fort Missoula, Mont., report relative to title to lands of	33	24
Fort Riley, Kans, estimate of Secretary of War for purchase of books for the libraries of the cavalry and artillery school at	230	32
Fort Sheridan rifle range, supplemental estimate of Secretary of War of appropriation for	115	28
Fort Wadsworth, N. Y., additional land for fortification at	98	26
Foulk, George C., letter from the Secretary of State submitting for appropriation the claim of	449	37
G.		
Galveston Harbor, Texas, report on improvements in	454	37
General Land Office, letter from Secretary of Interior recommending an increase in the salary of the chief clerk of the	142	31

Subject.	No.	Vol.
Geological Survey:		
Report of the director of the (vol. 4) ..... [Part 5]	1	14
Estimates of irrigation branch of the	326	35
Additional estimate of Secretary of the Interior of appropriation from the director of the, for necessary expenses of the irrigating branch of the	330	35
George, Mrs. Susanna, communication from the Light-House Board in relation to claim of	379	35
Green and Barren Rivers, Kentucky, report of bill relating to leases of water powers on the	389	35
Gulf of Mexico, report for deep harbor on	56	26
Guthrie, Okla., methods of locating homesteads and town sites at the land office at	209	31
H.		
Hampton, Va., extension of national cemetery at	87	26
Hydrographic Office, estimate from Secretary of the Navy for printing and binding for the fiscal year 1891	177	31
I.		
Illinois and Mississippi Canal, report upon survey of	316 429	35 37
Import duties, statement of refunds of for fiscal year ended June 30, 1889	11	24
Letter relative to tariffs of Austria-Hungary, France and Germany beet-sugar taxes and export bounties	191	31
Indians:		
Estimate from Secretary of Interior for an appropriation for relief of destitute	241	32
Funds for subsistence and civilization of certain tribes of	52	26
Cherokee, Freedmen Delawares, and Shawnees, estimates of the Secretary of the Interior of an additional sum of $10,000 to carry into effect the act for enrollment of the	456	37
Chippewa, of Lake Superior, letter from Secretary of the Interior relative to an immediate appropriation for relief of the	99	26
Kickapoos, amended estimate of Secretary of the Interior of appropriation for "fulfilling treaties with the"	15	24
Sioux, estimate of Secretary of the Interior of appropriation for the education of the	333	35
Sioux at Devil's Lake Agency, N. Dak., recommendation of Secretary of Interior of an appropriation of $25,000 for immediate relief of the	131	28
Indian agents, relief of certain	298	35
Indian appropriation bill	405	37
Indian Department, tabular statements of disbursements made from appropriations for the, for 1889	8	24
Indian depredation claims, schedule of	122	28
Indian goods, exigency purchases of	18	24
Indian Office:		
Recommendation of the Commissioner of Indian Affairs of the re-establishment of the office of chief clerk of the	196	31
Letter urging increase of salary of Commissioner, assistant commissioner and financial clerk of the	265	34
Indian reservations, property transferred on the several	48	26
Indian schools:		
Carlisle, Pa., estimate from Secretary of Interior for buildings, etc., for the Indian school at	221 285	32 34
Supplemental estimate from Secretary of the Interior of amount required for support of, upon Indian reservations	334	35
Transportation, estimate of deficiency in appropriation for	219	32
Indian scouts, employment of	299	35
Indian service, amended estimates for the, for fiscal year ending June 30, 1891	205	31
Indian supplies, increased estimate of Secretary of the Interior for telegraphing and purchase of	269	34

Subject.	No.	Vol.
Initial monuments, estimate from Secretary of Interior for an appropriation for, for mineral surveys	290	34
Internal commerce, report Chief of Bureau of Statistics on commerce and navigation [Part 2].	6	23
Internal Revenue, report of the Commissioner of, for 1889	4	18
Internal Revenue officers, recommendation of the Commissioner of Internal Revenue for amendment of the Revised Statutes providing penalty for obstructing, in their duty	397	37
International American Congress, estimates from Secretary of State of appropriations to complete the work of the	407	37
International Congress of Engineers, report on inland navigation and seaports of France, with a list of canals and canalized rivers of the United States	378	35
Iron and Steel, tests of	14	25
J.		
Jews in Russia, concerning the enforcement of proscriptive edicts against	470	37
Jones, Russell & Co., claim of	220	32
Judgments due the United States, letter from the Solicitor of the Treasury in regard to unpaid	308	35
K.		
Kennebunk River, Maine, report of survey of	136	28
Key West, Fla., report on improvement of harbor of	39	24
Kittery navy-yard, increase of force in	462	37
L.		
Labor laws. (*See* Contract labor laws).		
La Fayette monument, communication of Secretary of War for appropriation for site for the	465	37
Lake Michigan to the Illinois River, report upon survey of water-way from	264	33
Lake Ontario and Irondequoit Bay, channel between	320	35
Land entries, abstract of, suspended	111	28
Land offices, estimate from the Secretary of the Interior for opening, at Pierre and Chamberlain, S. Dak	184	31
Land patents:		
Undelivered, in Arkansas and Mississippi	416	37
Compilation of, undelivered	425	37
Larchmont Harbor, New York, reports upon survey of	40	26
Larkin, G. T., letter from Attorney-General in reference to the expenses of, late deputy-marshal eastern district of Tennessee	402	37
League Island navy-yard	273	34
Lexington, Ky., donation of land at, for military purposes	44	26
Libraries, estimate from the Secretary of War for purchase of books for the, of the cavalry and artillery school at Fort Riley, Kans	230	32
Life-Saving Service, letter from the General Superintendent of the, in relation to an appropriation to reimburse the crew of the life-saving station at Muskeget, Mass	380	35
Lights:		
Recommendation of Secretary of the Treasury for a light station at or near the mouth of the new cut-off channel, Baltimore Harbor, Maryland	270	34
Letter from Secretary of the Treasury calling attention to the recommendation of the Light-House Board that range lights be established at entrance of Beaufort Harbor, North Carolina	327	35
Recommendation Secretary of the Treasury of appropriation for the purchase of additional land for the Cheboygan River range-light station	271	34
Letter from Secretary of the Treasury recommending an appropriation for proper lights at Doller's Point and on Hog Island Wharf, James River, Virginia	267	34

Subject.	No.	Vol.
Lights—Continued.		
Letter from the Light-House Board recommending an appropriation to establish range lights in Lake Winnebago, Wisconsin	254	32
Letter from Secretary of the Treasury transmitting bill H. R. 4665, "to establish five lights along the ship channel of Mobile Bay," and recommending modifications in same	202	31
Recommendation of Secretary of Treasury of an appropriation for proper lights marking the entrance of St. Jones River, Delaware Bay	257	32
Letter from Secretary of the Treasury recommending an appropriation for a light and fog signal at St. Mary's Island, Alaska	259	32
Recommendation of Light-House Board of additional appropriation for a light and fog signal at Seul Point, Michigan	278	34
Letter from the Secretary of the Treasury recommending an appropriation for, on the Thames River, between New London and Norwich, Conn	312	35
Letter from the Secretary of the Treasury recommending an appropriation for range of lights between Windmill Point, Lake St. Clair, and Belle Isle, Detroit River, Michigan	260	32
Recommendation of Secretary of the Treasury of an appropriation for proper lights in Yaquina Bay, Oregon	258	32
Light-house establishment, letter from the Secretary of the Treasury requesting that certain items in estimate for special works for the, be placed in urgent deficiency bill	176	31
Light-house tenders, estimate of Secretary of the Treasury for the construction of the several	173	31
Light and steam fog-whistle, New London, Conn., letter from the Secretary of the Treasury recommending the establishment of a	313	35
Light station, Sherwood Point, Wisconsin, estimate from the Light-House Board of an appropriation for land for an approach to the	36	24
Livingston Point, near Paducah, Ky., report upon survey of	172	31
Louisiana, affairs in the overflowed districts of	342	35
Lower Cumberland River, reports upon survey of, below Nashville, Tenn.	85	26
Lyon, Isaac S., letter from attorney-general submitting for appropriation the claim of	439	37
M.		
Machine guns for the Army, estimate from Secretary of War, of an appropriation for	377	35
McVay, James A. J. and Joseph H., claim of	150	31
Mail contracts, annual report on [Parts 1 and 2]	113	29, 30
Maine, report of Secretary of War relating to ordnance and ordnance stores to the State of	398	37
Manistee River, Michigan, report upon improvement of harbor at mouth of	88	26
Manokin River, Maryland, report upon survey of	149	31
Maricopa County, Ariz., veto of bill to issue certain bonds of supervisors of	422	37
Marine Hospital, Chicago, Ill., letter from the Secretary of the Treasury recommending an appropriation for the completion of the approaches to the	164	31
Martha's Vineyard, Mass., reports upon survey of	59	26
Menomonee Harbor, Wisconsin, report upon survey of	34	24
Merchant Marine Service, petition of officers of certain marine insurance companies in favor of bill (H. R. 592) to increase the safety of loaded vessels, etc	168	31
Milford Harbor, Connecticut, report of survey of	139	28
Military Academy:		
Estimate from the Secretary of War of appropriations for the	159	31
Estimate from the Secretary of War of appropriation for pay of the Superintendent of the, for fiscal year 1891	77	26
Petitions of Army officers to increase appointments at large to the United States	444	37

Subject.	No.	Vol.
Military Academy—Continued.		
Estimates from the Secretary of War of appropriations for the construction of a commissary storehouse at the, at West Point, and for purchase of land for target practice and drill at Fort McPherson, Ga	91	26
Military Academy band, petitions to reorganize the	446	37
Military courts, appropriation for expenses of the	297	35
Military establishment, statement of expenditures from contingent funds	54	26
Military posts, estimates from Secretary of War of appropriations for buildings at	17	24
Military reservations:		
Estimate from Secretary of the Interior to pay custodians of abandoned	248	32
Estimate of Secretary of Interior of deficiency for preservation of abandoned	189	31
Estimate of Secretary of Interior to pay salary of the custodian of the abandoned, at Fort Lyon, Colo	265	34
Minnesota Point, Wisconsin, reports upon survey of	51	26
Mint, report of the director of the, on the production of precious metals	354	35
Mint, Philadelphia, letter from the Director of the, recommending that an increase be made in the salary of the chief clerk of the	86	26
Mississippi River, floods upon the	281 291	34 34
Mississippi River Commission, expenses of	356	35
Missouri, report of Third Auditor of amount found due the State of	448	37
Missouri River, report of survey of the, between Cambridge and Glascow	251	32
Mitchell, Edward, communication from the Supervising Architect of the Treasury in relation to the account of	384	35
Montana, increased estimate of Secretary of Interior of appropriation for surveying the public lands in	409	37
Montanari, Joseph, communication from Secretary of State in relation to an appropriation for relief of	375	35
Montoya, E., and Sons, claim of	127 132	28 28
Monuments or tablets at Gettysburgh, estimate of Secretary of War of appropriations for	195	31
Mountain guns, carriages, etc., estimate from Secretary of War of appropriation for	155	31
Mount Vernon, Va., report of survey for a national road from the aqueduct bridge to	106	28
Muskegon and Ludington Harbors, Michigan, further improvement of	105	26
N.		
Narragansett Bay, reports upon survey of	57	26
Nautical Almanac Office, estimate of Secretary of the Navy for rent of rooms for use of the	261	32
Naval officers, request of Secretary of the Navy that certain, be relieved of checkage against accounts in office of Fourth Auditor	203	31
Naval service, estimate of Secretary of the Navy of deficiency in appropriation for transportation and recruiting in the	253	32
Navy, Annual Report of the Secretary [Part 3]	1	8 9
Navy Department:		
Estimate of Secretary of the Navy of deficiency in the appropriation for contingent expenses of the	343	35
Contingent expenses for 1889	67 140	26 28
Employés in		
Estimate of Secretary of the Navy of a deficiency in the appropriation for provisions and clothing for the	365	35
Navy-yards, estimate of Secretary of the Navy of appropriation for extending the launching ways at the, at New York and Norfolk	315	35
Navy-yard, Portsmouth, N. H., estimate from Secretary of the Navy for reconstruction of buildings and machinery destroyed by fire at the	276	34

Subject.	No.	Vol
Nebraska, estimate from Secretary of the Interior for survey of a portion of the northern boundary of	201	
Nehalem Bay and Bar, Oregon, reports upon survey of	70	
New Haven Harbor, Connecticut, improvements of	145	
New London, Conn., letter from Secretary of the Treasury recommending the establishment of a light and steam fog-whistle at	313	
New York City, injurious deposits in harbor and adjacent waters of	341	
New York Harbor, estimate of Secretary of War of appropriation for the prevention of obstructive deposits in	165	
North East River, Maryland, report upon survey of	21	
North East River, North Carolina, report upon survey of	35	
Nye, Lieut. Haile C. T., letter from the Secretary of State recommending an appropriation for bringing home the remains of, late naval attaché at Lima, Peru	100	
O.		
Occoquan Creek, Virginia, reports upon survey of	75	
Ocmulgee River, Georgia, report upon survey of	215	
Oconee River, Georgia, report upon survey of	211	
Ogden, Utah, veto of increased indebtedness for city of	353	
Oklahoma:		
Estimate of Secretary of Interior of appropriation to carry into effect act to provide for town-site entries in	390	
Methods of locating homesteads and town-sites at the land office at Guthrie	209	
Oklahoma Territory, compensation of marshals for services in	421	
Onancock Harbor, Virginia, reports upon survey of	83	
Ordnance, report relative to site for testing and proving heavy	148	
Ordnance and ordnance stores, estimate from Secretary of the Navy of appropriation for	249	
Relating to, for the State of Maine	398	
Ordnance Proving Ground, Sandy Hook, New Jersey, report relative to test of rifled mortar presented by South Boston Iron Works at	158	
Osage River, Missouri, report of survey of	119	
Owen, George H., communication from Secretary of State in relation to bill to credit late United States consul at Messina with certain expenses for clerk hire, etc	366	
Owen, Thomas E., depredation claim of	469	
Owendaw and Wando Rivers, South Carolina, reports upon survey of	82	
P.		
Pacific Railroads, response of Secretary of the Treasury to resolution of House of March 15, 1890, inquiring whether the Government is owner of any of the first-mortgage securities of the, etc	282	
Paris consulate-general, communication from Secretary of State in relation to certain expenses incurred for storing archives of the	364	
Paris Exposition of 1889, report of the United States commissioner-general to the [Parts 1, 2, 3, 4, 5]	410	
Pensions:		
Estimate of Secretary of the Navy of deficiency in appropriations for Army and Navy pensions	419	
Additional estimates from Secretary of Interior for prompt execution of the recent act granting pensions to soldiers and sailors incapacitated for manual labor, etc	431	
Estimate of assistant treasurer of the United States at New York of additional force required to transact the increased business under the new pension legislation	435	
Information concerning the pension system	361	
Investigation as to rerating of	360	
Pension Bureau. (*See* Bureau of Pensions.)		
Pension Office, appointment of thirty medical examiners for the	102	

Subject.	No.	Vol.
Petoskey Harbor, Michigan, report of survey of	107	28
Plattsburgh, N. Y., donation of land at, for military parade and practice ground	37	24
Pleasant River, Maine, report of survey of	208	31
Ponca Indians, stock cattle for	45	26
Postal service:		
Contracts for foreign mails	458	37
Report on contracts and proposals for carrying the mails	113	29
Post libraries, estimate of Secretary of War of an appropriation for books for	152	31
Postmaster-General, communications from:		
Annual report [Part 4].	1	10
Foreign mails	458	37
Post-Office Department:		
Expenditures of the	31	24
Employment of post-office inspectors	372	35
Fraud upon the	463	37
Request of the Auditor of the Treasury for the, for additional clerical force in his Bureau	227	32
Request of the Postmaster-General for an appropriation to pay twenty clerks in	370	35
President, communications from:		
Annual message	1	1
Breadstuffs and provisions, message relating to importations of	392	37
Cherokee Indians, appropriation to continue negotiations with	400	37
Chippewa Indians, of Minnesota, relief of	247	32
Indian scouts, employment of	299	35
Jews in Russia, concerning the enforcement of proscriptive edicts against the	470	37
Rebecca, seizure of the schooner	328	35
Seal fisheries of Behring Sea, relating to the	450	37
Round Valley Reservation, reduction of	72	26
Veto messages—		
Bill H. R. 848, addition to public building at Dallas, Tex	359	35
Bill H. R. 3034, issue of certain bonds by Maricopa County, Ariz	422	37
Bill H. R. 7170, to increase indebtedness of Ogden, Utah	353	35
Printing and binding for Treasury Department, letter from the Secretary of the Treasury calling attention to the urgent necessity of an additional appropriation for	323	35
Private Land Claims, transcript of records and files of	415	37
Public Buildings:		
Letter from Secretary of the Treasury, calling attention to the necessity of an appropriation of $142,000 for furnishing certain specified	311	35
Letter from Secretary of the Treasury, transmitting an itemized statement of the expenditures for, for year 1889	351	35
Auburn, N. Y., request of Secretary of the Treasury for an additional appropriation for the	182	31
Baltimore, Md., request of Secretary of the Treasury for an appropriation of $20,000 to complete the	393	37
Bureau of Printing and Engraving, estimates of appropriations for additional buildings for use of the	235	32
Carlisle, Pa., estimate from Secretary of Interior for buildings, walks, and fences at Indian School at	221	32
Carlisle, Pa., estimate from Secretary of Interior for buildings for Indian school at	285	34
Charleston, S. C., and other places named, recommendation of Secretary of the Treasury for appropriations for repairs, alterations, and improvements of, at, etc	114	28
Charleston, S. C., request of Secretary of the Treasury for an additional appropriation for the, at	187	31
Charleston, S. C., recommendation of Secretary of the Treasury for an increase of the limit of cost of building and site at	243	32
Chicago, Ill., request of Secretary of the Treasury for an appropriation for repairs and improvements of the, at	167	31

Subject.	No.	Vol.
Public Buildings—Continued.		
Chicago, Ill., recommendation of Secretary of the Treasury for an appropriation for the completion of the approaches to Marine Hospital at	164	31
Coast and Geodetic Survey, recommendation of Secretary of the Treasury for purchase of additional buildings for the	153	31
Dayton, Ohio, estimate of Secretary of the Treasury of an appropriation to improve the sewerage system at the Central Branch of the Soldiers' Home at	358	35
Dayton, Ohio, request of Supervising Architect for an appropriation of $10,000 on account of the, at	459	37
Eastport, Maine, and other places named, recommendation of Secretary of the Treasury for an increase in the limit of cost of the	112	28
Fort Smith, Ark., request of Secretary of the Treasury for an additional appropriation to complete the	143	31
Fort Smith, Ark., communication from Attorney-General relating to deficiency in appropriation for repairs of	178	31
Frankfort, Ky., request of Secretary of the Treasury for an appropriation for payment for labor on and materials for	345	35
Keokuk, Iowa, request of the Secretary of the Treasury for an appropriation of $7,500 for additions to the	406	37
Key West, Fla., request of Supervising Architect for an appropriation of $10,000 on account of the	460	37
Leavenworth, Kans., recommendation of Secretary of the Treasury of an appropriation for the, at	185	31
Lubec Narrows, Maine, letter from the Light-House Board relative to an additional appropriation for a light-house at	97	26
Lubec Narrows, Maine, call of Secretary of the Treasury to the sity for an appropriation of $15,500 for the completion of light-house at	408	37
Marine Corps, estimate of Secretary of the Navy for the erection of a building for the commandant and staff of the	204	31
Military Academy, West Point, estimate of Secretary of War of appropriations for the construction of a commissary storehouse, etc., at the	91	26
Military posts, additional estimates of Secretary of War of appropriations for buildings at	17	24
Nautical Almanac Office, estimate of Secretary of the Navy for rent of rooms for use of the	261	32
New York City, call of the Secretary of the Treasury for an appropriation for alterations and repairs of the, at	218	32
Omaha, Neb., estimate of Secretary of War for a storehouse for use of quartermaster and commissary department at	229	32
Ottumwa, Iowa, recommendation of the Secretary of the Treasury for an additional appropriation for completion of the approaches to the, at	137	28
Philadelphia, Pa., reqnest of Secretary of the Treasury for an appropriation for repairing custom-house at	186	31
Rockland, Maine, request of Secretary of the Treasury for an appropriation of $3,000 for improvement of the custom-house and grounds at	403	37
St. Louis, Mo., request of the Secretary of the Treasury for an appropriation for certain repairs on old custom-house at	346	35
San Francisco, Cal., recommendation of the Secretary of the Treasury for an appropriation of $450,000 for the, at, be included in deficiency appropriation bill	92	26
Supervising Architect's Office, communication from Secretary of the Treasury relative to the necessity of additional space for the engineering and drafting division of the	302	35
Troy, N. Y., communication from Secretary of the Treasury relative to a further increase of the limit of cost for the, at	134	28
Utah penitentiary, estimate of Attorney-General for an appropriation to preserve the cell building at the	385	35
Wichita, Kans., request of Secretary of the Treasury for an appropriation of $8,000 for the, at	412	37

Subject.	No.	Vol.
Public Buildings—Continued.		
Winona, Minn., call of Secretary of the Treasury to the necessity for an additional appropriation to complete the, at	309	35
Winona, Minn., request of Supervising Architect for an appropriation of $10,000 on account of the, at	461	37
Yellowstone National Park, estimate from Secretary of War for buildings for the shelter of troops detailed for the protection of	188	31
Public documents, receipts, distribution, and sale of	212	31
Public Lands:		
Estimate from Secretary of Interior of deficiencies in the appropriations for depredations on public timber and for protecting the	190	31
Letter from the Secretary of the Treasury transmitting increased estimate of Secretary of Interior for protecting the	352	35
Public Printing and Binding:		
Estimate of Public Printer of deficiency in the appropriation for the fiscal year ended June 30, 1890	30	24
Estimate from the Public Printer of deficiency in appropriation for	382	35
Q.		
Quarantine service, letter from Secretary of the Treasury recommending an increase in the appropriation for completion of the wharf for the United States quarantine station at Sapelo Sound, Deboys, Ga	183	31
Quartermaster's Department. (*See* Army.)		
R.		
Raymond Bros., claim of	125	28
***Rebecca*, message relating to seizure of the schooner**	328	35
Receipts and expenditures of the United States	294	34
Redfern, Joseph and wife, letter from Secretary of the Treasury transmitting claim of	210	31
Revenue Cutter Service, statement of Secretary of the Treasury of expenditures for the, for fiscal year 1889	38	24
Richardson, Benjamin F., claim of	10	24
Rivers and harbors, report on inland navigation and seaports of France, with a list of canals and canalized rivers in the United States	378	35
Road, estimate of Secretary of War of an appropriation for repairing the roadway from Willets Point to Whitestone, N. Y	357	35
Road, Antietam Cemetery, estimate from Secretary of War of appropriation for completion of	388	35
Roadway, estimate from Secretary of War of an appropriation for the construction of a, from Atlanta to Fort McPherson, Ga	376	35
Roanoke River, reports upon survey of	62	26
Rock Island Arsenal:		
Estimate of appropriation to develop water power pool at	381	35
Report of present condition of	239	32
Rock Island Bridge and Watertown Arsenal, additional estimates by the Ordnance Department of the Army of appropriations for the	307	35
Round Valley Indian Reservation, reduction of, in California	72	26
S.		
St. Croix River, Maine, reports upon resurvey of	89	26
St. Mary's Falls Canal, Michigan, reports of commerce on, 1889	79	26
Salem Harbor and South River, Massachusetts, report upon survey of	28	24
San Mateo Spring Tract No. 134, report on the private land claim	96	26
Santa Fé, N. Mex., donation of land for military purposes	43	26
Sarasota Bay, Florida, report upon survey of	61	26
Savannah River, report upon survey of, above Augusta, Georgia	213	32
Saville, James H., communication from the Commissioners of the District of Columbia in relation to a judgment of the Court of Claims in favor of	447	37
Seal fisheries of Behring Sea, message of the President relating to	250	32

Subject.	No.	V
Second Light-house District, estimate of Secretary of the Treasury of additional appropriation to complete the steamer for the	166	
Secretary of Agriculture, communications from:		
Annual report for year 1889 [Part 7].	1	
North Dakota Experiment Station, in reference to an appropriation for	423	
Silk culture, report upon the operations of the Women's Silk Culture Association	110	
Statement of expenditures of the Department of Agriculture for fiscal year ending June 30, 1889	104	
Secretary of the Interior, communications from:		
Annual Report of (in five volumes):		
Reports of the Secretary of the Interior and the Commissioner of the General Land Office (vol. 1) [Part 5].	1	
Report of the Commissioner of Indian Affairs (vol. 2) [Part 5].	1	
Reports of the Commissioner of Patents, Commissioner of Pensions, etc. (vol. 3) [Part 5].	1	
Report of the Director of the Geological Survey (vol. 4) [Part 5].	1	
Report of the Commissioner of Education (vol. 5) [Part 5].	1	
Alaska, compulsory school attendance in	321	
Arizona, laws of fifteenth legislative assembly	109	
Arkansas and Mississippi, undelivered land patents in	416	
Bureau of Pensions, transfer to the War Department	296	
Commissioner of Indian Affairs, letter urging increase of salary of Commissioner, assistant commissioner, and financial clerk of the Indian Office	265	
Blinn, Richard F., claim of	130	
Dickerman, A. T., claim of	371	
Geological Survey, estimates of expenses of irrigation branch of the	326	
Guthrie, Oklahoma, methods of locating homesteads and town-sites at the land office at	209	
Indians, funds for subsistence and civilization of certain tribes of	52	
Indian agents, relief of certain	298	
Indian appropriation bill	405	
Indian Department, tabular statements of disbursements made from appropriations for the, for 1889	8	
Indian depredation claims, schedule of	122	
Indian goods, exigency purchases of	18	
Indian reservations, property transferred on the several	48	
Interior Department:		
Accounts of disbursing officers of the	417	
Expenditure of contingent fund	117	
Jones, Russell & Co., claim of	220	
Land patents, compilation of undelivered	425	
McVay, James A. J. and Joseph H., claims of	150	
Montoya, E., and Sons, claim of	127, 132	
Owen, Thomas E., depredation claim of	469	
Pensions:		
Investigation as to rerating of	360	
Information concerning the pension system	361	
Pension Office, appointment of thirty medical examiners for the	102	
Ponca Indians, stock cattle for	45	
Private land claims, transcripts of records and files of	415	
Public documents, receipts, distribution, and sale of	212	
Raymond Bros., claim of	125	
San Mateo Spring Tract No. 134, private land claim	96	
Shepard, Henry, claim of	124	
Sisseton and Wahpeton Indians, condition of	443	
Slusher, William, depredation claim of	468	
Smith, Nancy, pension to	457	
Suspended land entries, abstract of	111	
Taylor, John, claim of	123	
Union Pacific Railway Company, land patents to the	453	
Van Pelt, Thomas, claim of	151	
Whitcomb, Aretas, claim of	129	

Subject.	No.	Vol.
Secretary of the Navy, communications from:		
Annual report (vols. 1 and 2).....[Part 3].	1	8,9
Kittery navy-yard, increase of force in	462	37
League Island navy-yard.....	273	34
Navy Department:		
Contingent expenses for 1889.....	67	26
Employés in	140	28
Thompson Electric Welding Company, process of welding by electricity	279	34
Secretary of State, communications from:		
Annual report on foreign relations .....[Part 1].	1	1
Department of State, contingent expenses of.....	322	35
Import duties relating to tariffs of Austria, Hungary, France, and Germany, beet-sugar taxes and export bounties on same.....	191	31
Secretary of the Treasury, communications from:		
Alaska, estimate of appropriation for steam vessel for use of civil government of.....	93	26
Alaska, estimate for maintenance of the refuge station at Point Barrow.....	249	32
Alaska, recommending an appropriation for the establishment of a light and fog signal at St. Mary's Island.....	259	32
Alaska, estimate of appropriation for erection of marine barracks at Sitka	163	26
Alaska, estimate for education of children in, for year 1891.....	303	35
Accounts of the Government, receipts and expenditures of the United States	294	34
Allen, J. B., transmitting amended estimate from Attorney-General to compensate.....	391	35
American Cemetery, Acapulco, Mex., transmitting a communication from the Secretary of State requesting an appropriation for the improvement of the.....	317	35
Angel Island quarantine station, California, transmitting increased estimate of appropriation for the	154	31
Annual Report of the, on the finances	2	19
Ante-bellum mail service, etc., transmitting certain claims for, and certain claims of Pere Marquette Railroad Company and Pacific Mail Steamship Company for mail service.....	418	37
Appropriations, estimate of, for service of the fiscal year ending June 30, 1891.....	5	21
Appropriations, estimates of deficiency, for year 1890 and prior years	174	21
Appropriations concerning bill of H. R. 3823 to repeal laws relating to permanent and indefinite.....	274	34
Appropriations, transmitting letter from the Commissioner of Pensions asking an appropriation for thirty medical examiners	329	35
Appropriations, supplemental estimate of, required by the various Departments for fiscal year ending June 30, 1890, and prior years.	394	21
Army, transmitting estimate from Secretary of War of deficiency in the appropriation for pay of the	236	32
Army, transmitting estimate from Secretary of War of a deficiency in the appropriation for "pay, etc., of the"	348	35
Army, transmitting estimate from Secretary of War of deficiency in the appropriation for pay, etc., of the.....	430	37
Army Gun Factory, transmitting increased estimate of Secretary of War for machinery and plant at the.....	214	32
Arnoux, W. H., transmitting request of Secretary of the Navy for compensating, for services as counsel.....	314	35
Arrears of pay and bounty for volunteers, transmitting estimates of appropriations for.....	116	28
Arsenals, transmitting letter from Secretary of War relating to estimates of appropriations for the, at Indianapolis, Ind., and at West Troy, N. Y.....	193	31
Artificial limbs, transmitting estimate of Secretary of War of deficiency in the appropriation for.....	228	32

Subject.	No.
Secretary of the Treasury, communications from—Continued.	
Atlantic and Pacific Railroad Company, transmitting an estimate from Secretary of Interior for survey of the land grant to the	250
Barge office, New York, requesting an immediate appropriation of $20,000 to cover the cost of repairs on the	350
Bishop & Co., transmitting letter from Secretary of State in relation to an appropriation to pay claim of	231
Board of Pension Appeals, transmitting letter from Secretary of Interior relative to an increase in the number of members of the	141
Bradford, Commander Royal B., transmitting estimate from the Secretary of the Interior of an appropriation to compensate	244
Buildings for garrison purposes, transmitting estimate from Secretary of War of appropriation for	162
Bureau of Engraving and Printing, transmitting request of the Chief of the, for an additional appropriation for the compensation of employés on account of overtime work	304
Bureau of Statistics, requesting provision in legislative appropriation bill for a special statistical clerk in the	163
Burial lots, Fort Porter, transmitting estimate from Secretary of War of an appropriation for the purchase of, in Forest Lawn Cemetery, New York	47
Cadet Hospital, West Point, N. Y., transmitting estimate of Secretary of War of appropriation to change the plumbing at the	349
Caswell, T. T., Pay Inspector U. S. Navy, transmitting request of Secretary of the Navy for authority of Congress to relieve, of checkage against his account	232
Chapin, E. E., claim of	441
Chargés d'affairs *ad interim*, transmitting letter from Secretary of State relative to an appropriation for salaries of	225
Cherokee Freedmen, Delawares, and Shawnees, transmitting estimates of Secretary of the Interior for an additional sum of $10,000 to carry into effect the act for enrollment of the	456
Chickamauga battlefield, transmitting estimate from Secretary of War for an appropriation of $3,000 for maps of	442
Chief clerk, General Land Office, transmitting letter from Secretary of Interior recommending an increase in the salary of the	142
Cigars, transmitting letter from Commissioner of Internal Revenue recommending certain amendments to existing laws taxing manufacturers of	363
Civil officers, transmitting draft of a bill "To limit and define the term of all of the United States, appointed for a fixed term"	335
Civil Service Commission, transmitting supplemental estimate of, for salaries, etc., in the office of the	301
Claims, transmitting list of, arising under the act of July 4, 1864, allowed since January 17, 1889	126
Claims, transmitting list of, allowed by the accounting officers of the Treasury, under appropriations balances of which have been exhausted or carried to the surplus fund	144
Claims, transmitting list of, all allowed, enumerated in House Ex. Docs. Nos. 55 and 153, Forty-eighth Congress, second session, for which appropriations have not been made	314
Claims, transmitting communication from the Commissioner of Indian Affairs for an appropriation to pay claim of Seneca Indians	340
Claims, transmitting of certain States, on account of "refunding to States expenses incurred in raising volunteers"	413
Clerks for Second Auditor's office, transmitting the recommendation of Second Auditor for an appropriation for ten additional	433
Clerical force, transmitting applications from the Third and Fourth Auditors for increased	440
Coast and Geodetic Survey:	
Transmitting estimate of deficiencies in the appropriations for the service of the, for fiscal year 1890	46
Report for 1889	55
Transmitting statement of expenditures on account of the, for fiscal year ended June 30, 1890	90

Subject.	No.	Vol.
Secretary of the Treasury, communications from—Continued.		
Coast and Geodetic Steamer Gedney, estimate of appropriation for repairs of the	171	31
Columbia River light-ship *Oregon*, transmitting estimate of an additional appropriation to complete the	237	32
Consular officers, transmitting letter from Secretary of State in relation to the necessity of an immediate appropriation for payment of salaries of	387	35
Court of Claims:		
List of judgments rendered by the, calling for an appropriation	181	31
List of judgments rendered by the	427	37
Request of Commissioners of District of Columbia for appropriation to pay judgment rendered by, in favor of Daniel Donovan	432	37
Courts of the United States:		
Estimates of Attorney-General of appropriations for expenses of	121	28
Estimate of Secretary of the Interior for deficiency in the appropriations for distribution of the reports of the Supreme Court	179	31
Estimate of deficiency in appropriation for fees of witnesses in the, submitted by the Attorney-General	223	32
Transmitting letter from the Attorney-General relating to deficiencies in appropriations for Department of Justice	224	32
Transmitting letter from the Attorney-General, additional estimates of deficiencies in certain appropriations for expenses of the	332	35
Transmitting letter from the Attorney-General, deficiencies in expenses of, for years 1888, 1889, and 1890	338	35
Consolidated and revised statement of deficiencies to defray expenses of, to take place of previous estimates	368	35
Estimates (revised) of Attorney-General for expenses of the, for year 1891	401	37
Estimates from the Attorney-General of deficiencies in appropriations on account of expenses of	414	37
Estimates from the Attorney-General of appropriations to defray expenses of the, for year 1890	452	37
Estimates of deficiencies for the expenses of the	467	37
Cunard Steamship Company, transmitting letter from the collector of the port of New York in response to resolution of inquiry of the House in relation to violation of the contract-labor laws by the	420	37
Customs collection district, Laredo, Tex., recommending the establishment of, in lieu of Corpus Christi	242	32
Customs duties, transmitting statement of refund of, for fiscal year ended June 30, 1889	11	24
Customs officers, transmitting abstract prepared by commissioner of customs of the official emoluments of	306	35
Customs revenue:		
Transmitting estimate of expenses of collecting the, for fiscal year ending June 30, 1891	280	34
Recommending the annual appropriation for expenses of collecting the, be increased	263	32
Customs service:		
Transmitting report of all payments made to informers and seizing officers in the	9	24
Recommending that the compensation of the supervising special agent of the, be restored to $10 per day	226	32
Damages to certain vessels, transmitting estimates from Secretary of the Navy to reimburse the owners of schooner *Rillie S. Derby* and barges *Benefactor* and *Mayflower* for damages by collision with U. S. steamer *Juniata*	194	31
Department of Justice:		
Estimate of the Attorney-General of deficiency in the appropriation for printing and binding for the	374	35
Transmitting the recommendation of Attorney-General of the payment of certain bills in the	455	37

Subject.	No.	Vol.
Secretary of the Treasury, communications from—Continued.		
Department of Labor, transmits increased estimate of the Commissioner of Labor for rent of rooms for use of the	95	26
Department of State:		
Transmitting additional estimate from Secretary of State for binding manuscript belonging to the	275	34
Transmitting estimate of Secretary of State of deficiency for printing and binding for the	396	37
District attorneys, calling attention to the compensation allowed to the district attorney for the southern district of New York	325	35
District of Columbia:		
Transmitting additional estimates from the Commissioners of the, of deficiencies in appropriations for the service of the	428	37
Transmitting letter from the Commissioners of the, with additional list of judgments rendered against the, for appropriation	438	37
vs. McBlair, transmitting estimate of the Commissioners of the District of an appropriation to satisfy a decree	120	28
Eleventh Census:		
Transmitting estimate from Secretary of the Interior of $350,000 for printing, engraving, and binding for the	49	26
Transmitting estimate from the Secretary of the Interior of appropriation for expenses of the	160	31
Transmitting estimate from Secretary of the Interior of appropriation for printing, engraving, and binding for the	373	35
Equipment of vessels, transmitting an estimate from the Secretary of the Navy of deficiency in the appropriation for	180	31
Examining surgeons, transmitting estimate from Secretary of the Interior of the, and expenses of	464	37
First Comptroller's Office, transmitting letter from First Comptroller asking for appropriation to pay messenger in his office for extra services	395	37
Florida, transmitting report of Third Auditor upon the mutual demands of the State of, and the United States	68	26
Fog-signal, recommending an appropriation for, at or near Cuckold's Island, Maine	272	34
Fort Lyon, Colo., estimate to pay salary of custodian of, an abandoned military reservation	268	34
Fort Myer military post, transmitting estimate of Secretary of War of appropriation for	161	31
Fort Sheridan rifle range, transmitting estimate of Secretary of War of appropriation for	115	28
Fortifications, transmitting estimate from Secretary of War of appropriation for armament of	147	31
Foulk, George C., transmitting letter from Secretary of State submitting for appropriation the claim of	449	37
Geological Survey, transmitting letter from Secretary of the Interior submitting an additional estimate of appropriation from the Director of the, for necessary expenses of the irrigation branch of the	330	35
George, Mrs. Susannah, transmitting communication from the Light-House Board relative to claim of	379	35
Hydrographic Office, transmitting estimate of Secretary of the Navy for printing and binding for the, for fiscal year 1891	177	31
Indians, transmitting estimate from Secretary of Interior for an appropriation for relief of destitute	241	32
Indians, Chippewa, of Lake Superior, transmitting letter from Secretary of Interior relative to an immediate appropriation for relief of the	99	26
Indian Office, transmitting recommendation of the Commissioner of Indian Affairs for the reëstablishment of the office of chief clerk of the	196	31
Indian schools, supplemental estimate from Secretary of the Interior of amount required for, upon Indian reservations	334	35
Indian school transportation, transmitting estimate of deficiency in appropriation for	219	32

Subject.	No.	Vol.
Secretary of the Treasury, communications from—Continued.		
Indian service, transmitting amended estimates for the, for fiscal year ending June 30, 1891	205	31
Indian supplies, transmitting increased estimate of Secretary of the Interior for telegraphing and purchase of	269	34
Internal-revenue officers, transmitting the recommendation of the Commissioner of Internal Revenue for amendment of Revised Statutes providing penalty for obstructing, in their duty	397	37
International American Congress, transmitting estimates from the Secretary of State of appropriations to complete the work of the.	407	37
Initial monuments, transmitting estimate from the Secretary of the Interior for an appropriation for, for mineral surveys	290	34
Indians, Kickapoos, transmitting amended estimate of Secretary of the Interior of appropriation for "fulfilling treaties with the"	15	24
Land offices, transmitting estimate from the Secretary of Interior for opening, at Pierre and Chamberlain, S. Dak	184	31
Larkin, G. T., transmitting letter from Attorney-General in reference to the expenses of late deputy marshal, eastern district of Tennessee	402	37
Libraries, transmitting estimate from Secretary of War for books for books for the, of the cavalry and artillery school at Fort Riley, Kans	230	32
Life-Saving Service, transmitting communication from the General Superintendent of the, in relation to an apropriation to reimburse the crew of the life-saving station at Muskeget, Mass	380	35
Lights, recommending an appropriation for a light-station at or near the mouth of the new cut-off channel, Baltimore, Harbor, Maryland	270	34
calling attention to the recommendation of the Light-House Board that range lights be established at entrance of Beaufort Harbor, North Carolina	327	35
recommending an appropriation for the purchase of additional land for the Cheboygan River range-light station.	271	34
recommending an appropriation for proper lights at Doller's Point and on Hog Island Wharf, James River, Virginia.	267	34
transmitting recommendation of the Light-House Board for an appropriation for range lights on Lake Winnebago, Wisconsin	254	32
transmitting bill (H. R. 4665) to establish five lights along the ship channel of Mobile Bay, and recommending modifications of same	202	31
recommending an appropriation for proper lights for marking the entrance of St. Jones River, Delaware Bay	257	32
transmitting request of Light-House Board for an additional appropriation for a light and fog signal at Seul Point, Michigan	278	34
recommending an appropriation for twelve, on the Thames River, between New London and Norwich, Connecticut.	312	35
recommending an appropriation for a range of lights between Windmill Point, Lake St. Clair, and Belle Isle, Detroit River, Michigan	260	32
recommending an appropriation for proper lights in Yaquina Bay, Oregon	268	34
Light and steam fog-whistle, New London, Conn., recommending the establishment of a	313	35
Light-House Establishment, requesting that certain items in the estimate for special works for the, be placed in deficiency bill	176	31
Light-House tenders, submitting increased estimates of appropriation for the construction of the several	173	31
Light-station, Sherwood Point, Wisconsin, transmitting estimate from the Light-House Board of an appropriation for land for an approach to the	36	24
Lyon, Isaac S., transmitting letter from Attorney-General submitting for appropriation the claim of	439	37
Machine guns for Army, transmitting estimate of Secretary of War of an appropriation for	377	35

Subject.	No.	Vo
Secretary of the Treasury, communications from—Continued.		
Merchant-marine service, transmitting petition of officers of certain marine insurance companies in favor of bill (H. R. 592), "safety of loaded vessels"	168	
Military Academy, estimate from the Secretary of War of appropriations for the	159	
Transmitting estimate of Secretary of War of appropriation for pay of the Superintendent of the, for fiscal year 1891	77	
Military Reservations, transmitting estimate of Secretary of the Interior to pay custodians of abandoned	248	
Transmitting deficiency estimate of Secretary of Interior for preservation of abandoned	189	
Mint, Philadelphia, transmitting letter from the Director of the Mint, recommending that an increase be made in the salary of the chief clerk of the	86	
Missouri, transmitting a report of Third Auditor, of the amount found due the State of	448	
Mitchell, Edward, transmitting communication from the Supervising Architect of the Treasury in relation to the account of	384	
Montana, transmitting increased estimate of Secretary of Interior of appropriation for surveying public lands, to be applied to expenses of surveys of public lands in	409	
Montanari Joseph, transmitting communication from Secretary of State in relation to an appropriation for relief of	375	
Monuments at Gettysburgh, estimate of Secretary of War for	195	
Mountain guns, carriages, etc., transmitting estimate of Secretary of War of appropriation for	155	
Naval officers, transmitting request of Secretary of the Navy that certain, and others be relieved of checkage against their accounts in office of Fourth Auditor	203	
Naval service, transmitting estimate from Secretary of the Navy of deficiency in appropriation for transportation and recruiting for the	253	
Navy Department, transmitting estimate of the Secretary of the Navy of a deficiency in the appropriation for "contingent expenses of the"	343	
Transmitting estimates of the Secretary of the Navy of a deficiency in the appropriation for provisions and clothing for the	365	
Navy yards, transmitting estimate of Secretary of the Navy of appropriation for extending the launching ways at the, at New York and Norfolk	315	
Portsmouth, N H., transmitting an estimate from the Secretary of the Navy for the reconstruction of buildings and machinery destroyed by fire at the	276	
Nebraska, transmitting estimate from Secretary of the Interior, for survey of a portion of the northern boundary of	201	
New York Harbor, transmitting estimate of Secretary of War of appropriation for the prevention of obstructive deposits in	165	
Nye, Lieut. Haile C. T., transmitting recommendation of Secretary of State for an appropriation for bringing home the remains of late naval attaché at Lima, Peru	100	
Oklahoma, transmitting estimate of Secretary of the Interior of appropriation to carry into effect "act to provide for town-site entries in"	390	
Ordnance and ordnance stores, transmitting an estimate from Secretary of the Interior of appropriation for	240	
Owen, George H., transmitting communication from Secretary of State, in relation to bill to credit, late consul of United States at Messina, with certain expenses for clerk-hire, etc	366	
Pacific railroads, response to resolution of House of March 15, 1890, inquiring whether the Government is owner of any of the first-mortgage securities of the, etc	282	

Subject.	No.	Vol.
Secretary of the Treasury, communications from—Continued.		
Paris consulate-general, transmitting communication from Secretary of State, in relation to certain expenses incurred for storing archives of the	364	35
Pensions, transmitting estimates from Secretary of the Interior, of deficiency in appropriations for Army and Navy Pensions	419	37
Pensions, transmitting additional estimate of Secretary of the Interior for payment of pensions under recent act of Congress	431	37
Pensions, transmitting estimate from the Assistant Treasurer of the United States at New York of additional force required to transact the increased business under the new pension legislation	435	37
Post libraries, transmitting estimate from the Secretary of War of an appropriation for books for	152	31
Post-office Department:		
Transmitting communication from the Auditor of the Treasury for the, calling attention to the need of additional clerical force for his Bureau	227	32
Transmitting request from Postmaster-General for an appropriation to pay twenty clerks in	370	35
Precious metals, report of the Director of the Mint on the production of	354	35
Printing and binding for Treasury Department, calling attention to the urgent necessity of an additional appropriation for	323	35
Public buildings:		
Relating to an immediate appropriation for furnishing certain specified	311	35
Itemized statement of expenditures from appropriations for repairs and preservation of, for 1889	351	35
Auburn, N. Y., requesting an additional appropriation for	182	31
Baltimore, Md., recommending an appropriation to complete the, at	393	37
Bureau of Engraving and Printing, estimates of appropriation for additional buildings for the	235	32
Carlisle, Pa., estimate of Secretary of the Interior for buildings, etc., at Indian school at	221	32
Carlisle, Pa., estimate of Secretary of the Interior for buildings for Indian school at	285	34
Charleston, S. C., and other places, recommending appropriations for certain repairs of the, at	114	28
Charleston, S. C., requesting an additional appropriation for United States custom-house at	187	31
Charleston, S. C., recommending an increase of the limit of cost of site for the, at	243	32
Chicago, Ill., asking an appropriation for repairs, etc., of, at	167	31
Chicago, Ill., recommending an appropriation for completion of the approaches to the marine hospital at	164	31
Coast and Geodetic Survey, recommending the purchase of an additional building for use of the	153	31
Dayton, Ohio, estimate of appropriation to improve the sewerage system at the Central Branch of Soldiers' Home at	358	35
Dayton, Ohio, request of supervising architect for an appropriation of $10,000 on account of the, at	459	37
Eastport, Me., and other places, recommending an increase of the limit of cost of certain, therein named	112	28
Fort Smith, Ark., asking an additional appropriation for the, at	143	31
Fort Smith, Ark., communication from Attorney-General relating to deficiency appropriation for repairs of	178	31
Frankfort, Ky., requesting an appropriation for payment of labor and materials for	345	35
Keokuk, Iowa, requesting an appropriation for additions to the	406	37
Key West, Fla., letter from the supervising architect, requesting an appropriation of $10,000 on account of	460	37
Leavenworth, Kans., recommending an additional appropriation for the	185	31

Subject.	No.	Vol.
Secretary of the Treasury, communications from—Continued.		
Public buildings—Continued.		
Lubec Narrows, Maine, letter from the Light-House Board relative to an additional appropriation for a light-house at	97	26
Lubec Narrows, Maine, calling attention to the necessity of an appropriation of $15,500 for the completion of the light-house at	408	37
Marine Corps, estimate of Secretary of the Navy for public building for use of the commandant and staff of the	204	31
Military Academy West Point, estimate of Secretary of War of appropriations for commissary storehouse at the	91	26
Military posts, additional estimates from Secretary of War of appropriations for buildings at	17	24
Nautical Almanac Office, estimate of Secretary of the Navy for rent of rooms for the	261	32
New York City, calling for an appropriation for alterations and repairs in the, at	218	32
Omaha, Nebr., estimate from the Secretary of War for storehouse for use of quartermaster and commissary department at	229	32
Ottumwa, Iowa, recommending an additional appropriation for completion of approaches to	137	28
Philadelphia, Pa., asking an appropriation for repairs of	186	31
Rockland, Me, requesting an appropriation of $3,000 for the improvement of the custom-house grounds at	403	37
St. Louis, Mo., requesting an appropriation for certain repairs on the, at	346	35
San Francisco, Cal., recommending that an appropriation for, be provided for in deficiency bill	92	26
Troy, N. Y., relative to a further increase in the limit of cost of the	134	28
Utah penitentiary, communication from Attorney-General submitting an estimate for the preservation of cell building at	385	35
Wichita, Kans., requesting an appropriation of $8,000 for heating apparatus, elevator, and completion of	412	37
Winona, Minn., calling attention to the necessity for an additional appropriation for completion of	309	35
Winona, Minn., letter from the supervising architect requesting an appropriation of $10,000 on account of the	461	37
Yellowstone National Park, estimate of the Secretary of War for buildings for the shelter of troops detailed for the protection of	188	31
Public Lands:		
Transmitting an estimate of Secretary of the Interior of deficiencies in the appropriations for depredations on public timber and for protecting the	190	31
Transmitting increased estimate of Secretary of Interior for protecting the	352	35
Public Printing and Binding:		
Transmitting estimate of deficiency in appropriation for, for fiscal year 1890	30	24
Transmitting estimate from the Public Printer of deficiency in appropriation for	383	35
Quarantine service, recommending an increase of appropriation for completion of the wharf for the United States quarantine station at Sapelo Sound, Deboys, Ga.	183	31
Redfern, Joseph, and wife, transmitting claim of, for lease of property	210	31
Revenue Cutter Service, statement of expenditures for the, for fiscal year 1889	38	24
Road, transmitting estimate of Secretary of War of an appropriation for repairing the roadway from Willets Point to Whitestone, N. Y	357	35
Road to Antietam Cemetery, transmitting estimate of Secretary of War for appropriation to complete	388	35
Roadway, transmitting estimate from Secretary of War for construction of, from Atlanta to Fort McPherson, Ga	376	35

Subject.	No.	Vol.
Secretary of the Treasury, communications from—Continued.		
Rock Island Bridge and Watertown Arsenal, transmitting estimates by the Ordnance Department of the Army of appropriations for the	397	35
Saville, James H., communication from the Commissioners of the District of Columbia in relation to a judgment of the Court of Claims in favor of	447	37
Second light-house district, transmitting estimate of additional appropriation to complete the steamer for the	166	31
Signal Office, transmitting amended estimates of Chief Signal Officer, for salaries Signal Office for year 1891	16	24
Signal Office, transmitting estimate from Secretary of War of appropriation for salary of an engineer at the	50	26
Sioux Indians, transmitting estimate of the Secretary of the Interior of appropriations for the education of the	333	35
Sioux Indians at Devil's Lake Agency, N. Dak., transmitting letter from Secretary of Interior recommending an appropriation of $25,000 for immediate relief of the	131	26
Sioux reservations, transmitting estimate of Secretary of the Interior for expenses of surveying the	284	34
Soldiers' Home, transmitting request of Second Comptroller for an increase in the salaries of clerks in his office engaged in adjusting the accounts of the	287	34
Southern Ute Commission, transmitting estimate from Secretary of Interior of a deficiency in the appropriation for the	283	34
Standard Measures, transmitting estimate from the Superintendent of the Coast and Geodetic Survey for the construction of standard gallons, etc	312	35
Statistical Abstract, transmitting the twelth number of the	13	24
Steam fog whistle, Warwick Point, R. I., conveying a recommendation for the establishment of a	310	35
Sundry civil act, submitting recommendations by the Second Comptroller and Second and Third Auditors that certain provisions of the, in respect to auditing the accounts of the Signal Service Corps, be repealed	466	37
Target ranges, Fort McPherson, Ga., transmitting estimate from Secretary of War of an appropriation for the purchase of land for	53	26
Trade-dollar bullion, transmitting a report of the Director of the Mint in response to resolution of House inquiring why the "trade-dollar bullion" has not been received	451	37
Treasurer's report on account of, for 1889	436	43
Treasury Department, transmitting report of the contingent expenses of the, for fiscal year ended June 30, 1889	12	24
Unpaid judgments, transmitting letter from the Solicitor of the Treasury relative to, due the United States	308	35
Villanova, Hermanos & Co., transmitting request of Secretary of State for an appropriation to enable him to pay	383	35
War Department, transmitting additional estimates of appropriations for increased clerical force required by the record and pension division of the	426	37
Washington Aqueduct, transmitting estimate from the Commissioners of the District of Columbia of additional appropriations for the	108	28
Wyatt, Daniel F., transmitting estimate from Attorney-General of appropriation to pay claim of, deputy United States marshal, for services in opening Oklahoma	367	35
Wyoming, transmitting estimate from Secretary of the Territory of, for payment of expenses of twelfth Territorial assembly	234	32
Yellowstone Park, transmitting estimate from the Superintendent of the, of amount necessary to carry into effect the requirements of the bill before Congress affecting the	331	35
Zuni Indian Agency, N. Mex., transmitting estimates from the Secretary of the Interior of appropriations for support of Indians and pay of agent at the	287	34

Subject.	No.	Vo
Secretary of War, communications from:		
Annual report, 4 vols. (vol. 1) [Part 2]	1	
Report of Chief of Engineers (vol. 2, part 1) [Part 2]	1	
(vol. 2, part 2) [Part 2]	1	
(vol. 2, part 3) [Part 2]	1	
(vol. 2, part 4) [Part 2]	1	
Report from Chief of Ordnance (vol. 3) [Part 2]	1	
Report of Signal officer (vol. 4, parts 1 and 2) [Part 2]	1	
Army,		
petitions of noncommissioned officers for reduction in the limit for retirement	319	
submitting petitions for increase pay of noncommissioned officers of the staff	170, 245, 277, 295, 324	
purchasing instruments for heavy artillery practice	73	
relative to objections to lineal promotions in the	386, 424	
relative to regular supplies, Quartermaster's Department	292	
reports of purchases of supplies for use of the, for 1889	256	
support of the	262	
transmitting letters relating to mileage of officers of the	399	
Boeing, William, for the relief of	133	
Byrne, Edward, relative to reinsatement of, as captain of cavalry, Army	233	
Chicamauga, estimate for printing and binding maps of the battle-field of	175	
Civilian engineers, statement of, for 1889	118	
Corths, H., deceased, estate of	246	
Duluth, Minn., report of survey of property donated by the city of	217	
Engineer, Museum, appropriation for an	222	
Executive Departments, useless papers in the	197	
Fort Douglas, Utah, submitting draft of bill relating to water supply at	76	
Fort Missoula, Mont., title to lands of	33	
Fort Wadsworth, N. Y, additional land for fortification at	98	
Hampton, Va., extension of national cemetery at	87	
Iron and steel, test of	14	
La Fayette monument, appropriation for site for the	465	
Lexington, Ky., donation of land at, for military purposes	44	
Military Academy, petitions for increase of appointments at large to	444	
Military Academy band, petitions to reorganize the	446	
Military courts, appropriation for expenses of	297	
Military Establishment, statement of expenditures from contingent funds	54	
Mississippi River Commission, expenses of	356	
Mount Vernon, Va., report of survey for a national road from the Aqueduct Bridge to	106	
Ordnance, report relative to a site for testing and proving heavy	148	
Ordnance and ordnance stores, relating to, for State of Maine	398	
Ordnance proving ground, Sandy Hook, N. J., report relative to test of rifled mortar presented by South Boston Iron Works	158	
Pension Bureau, transfer of	300	
Plattsburgh, N. Y., donation of land at, for military purposes	37	
Richardson, Benjamin F., claim of	10	
Rivers and Harbors:		
Alloway Creek, New Jersey, reports upon survey of	60	
Appoquinimink Creek, Delaware, report of survey of	19	
Aquia Creek, Virginia, report of survey of	135	
Beaufort River, North Carolina, report of survey of	42	
Belfast Harbor, Maine, report upon survey of	81	
Beverly Harbor, Massachusetts, report of survey of	27	
Big Black River, Mississippi, improvement of	216	
Brown's Creek, New York, report of survey of	22	
Cape Charles City, Va., report of survey of harbor of	29	

Subject.	No.	Vol.
Secretary of War, communications from—Continued.		
Rivers and Harbors—Continued.		
Cedar Bayou, Texas, reports upon survey of bar at mouth of	84	26
Chesapeake Bay, right of way of vessels in and from, to Baltimore	339	35
Chester River, Maryland, reports upon survey of	65	26
Chickahominy River, Virginia, reports upon survey of	41	26
Chincoteague Inlet, Virginia, report on improvement of	207	31
Coaster's Harbor Island, reports upon survey of	63	26
Cocheco River, reports of survey of, from Dover, N. H., to its mouth	74	26
Columbia River, report upon certain obstructions to navigation in the	64	26
Columbia River, improvement of	101	26
Coosa River, Alabama, report of survey of	94	26
Cranes and Waters Rivers of Essex Branch, Massachusetts, report of survey of	23	24
Cypress Bayou, Louisiana, report upon improvement of	252	32
Detroit River, approximate cost of tunneling	369	35
Detroit River, report on survey of, at Grosse Point, Mich	200	31
East Point Judith, Rhode Island, reports upon survey of	66	26
East River, report of survey of	169	31
map of survey of [Part 2]	169	31
Eastern Branch of the Potomac River, dredging channel of the	347	35
Elk River, Maryland, report of survey of	157	31
Fishing Creek, North Carolina, report on survey of	32	24
Fond du Lac River, Wisconsin, report of survey of	24	24
Galveston Harbor, Texas, reports of improvements in the	454	37
Green and Barren Rivers, Kentucky, report of bill relating to lease of water-powers on the	389	35
Gulf of Mexico, reports on deep harbor on	56	26
Illinois and Mississippi Canal, report of survey of	316 429	35 37
International Congress of Engineers, report on the inland navigation and seaports of France, with a list of canals and canalized rivers in the United States	378	35
Kennebunk River, Maine, report of survey of	136	28
Key West, Fla., report upon improvements of entrance to the harbor of	39	24
Lake Michigan to the Illinois River, report upon survey of a water-way from [Parts 1 and 2]	264	33
Lake Ontario and Irondequoit Bay, relating to the project for a channel between	320	35
Larchmont Harbor, New York, reports upon survey of	40	26
Livingston Point, near Paducah, Ky., report of survey of	172	31
Louisiana, affairs in the overflowed districts of	342	35
Lower Cumberland River, Tennessee, report of survey of	85	26
Manistee River, Michigan, report on improvement of harbor at mouth of	88	26
Manokin River, Maryland, report of survey of	149	31
Martha's Vineyard, Mass., reports upon survey of	59	26
Menomonee Harbor, Wisconsin, report of survey of	34	24
Milford Harbor, Connecticut, report of survey of	139	28
Minnesota Point, Wisconsin, reports upon survey of	51	26
Mississippi River, floods upon the	281 291	34 34
Missouri River, report of survey of the, between Cambridge and Glasgow	251	32
Muskegon and Ludington Harbors, Michigan, further improvement of	105	26
Narragansett Bay, reports upon survey of	57	26
Nehalem Bay and Bar, Oregon, reports upon survey of	70	26
New Haven harbor, Conn., improvements of	145	31
New York City, injurious deposits in harbor and adjacent waters of	341	35
North East River, Maryland, report of survey of	21	24
North East River North Carolina, report on survey of	35	24

Subject.	No.
Secretary of War, communications from—Continued.	
Rivers and Harbors—Continued.	
Occoquan Creek, Virginia, reports upon survey of	75
Ocmulgee River, Georgia, report upon survey of	215
Oconee River, Georgia, report upon survey of	211
Onancock Harbor, Virginia, report upon survey of	83
Osage River, Missouri, report of survey of	119
Owendaw and Wando Rivers, South Carolina, reports upon survey of	82
Petoskey Harbor, Michigan, report of survey of	107
Pleasant River, Maine, report of survey of	208
Roanoke River, Virginia, reports upon survey of	62
St. Croix River, Maine, report of resurvey of	89
St. Mary's Falls Canal, Michigan, report upon commerce of the, for 1889	79
Salem Harbor and South River, Massachusetts, report of survey of	28
Sarasota Bay, Florida, reports upon survey of	61
Savannah River, report upon survey of, above Augusta, Ga	213
Shallotte River, North Carolina, reports upon survey of	78
Sipsey River, report of survey of	198
Siuslaw River and Bay, Oregon, reports upon survey of	71
Umpqua River, Oregon, report of survey of	199
Union River and Union River Bay, Maine, report of survey of	138
Upper Columbia River, Washington, report upon survey of	238
Wappinger's Creek, New York, report of survey of	25
Warrior and Tombigbee Rivers, Alabama and Mississippi, report of survey of	156
Weymouth River, Massachusetts, report of survey of	26
Wicomico River, Maryland, report of survey of	20
Young's River and Klaskuine River, Oregon, reports upon survey of	69
Rock Island Arsenal:	
Estimate of appropriation to develop water-power pool at	381
Report on present condition of	239
Santa Fé, N. Mex., donation of land for military purposes at	43
Soldiers, burial of indigent ex-Union	58
Soldiers' Home, deposit of funds pertaining to the	355
Tents, transmitting draft of a bill to purchase	293
War Department:	
Contingent expenses of	128
List of employés in	80
Money accounts of disbursing officers	255
Washington aqueduct tunnel, relative to liabilities of certain contractors engaged in the construction of	286, 305
Shallotte River, North Carolina, reports upon survey of	78
Shepard Henry, claim of	124
Signal Office:	
Amended estimates from Chief Signal Officer for salaries Signal Office for fiscal year ending June 30, 1891	16
Estimate of Secretary of War of appropriation for salary of an engineer at the	50
Signal Officer, annual report of (vol. 4, parts 1 and 2) [Part 2]	1
Signal Service Corps, recommendations of the Second Comptroller and Second and Third Auditors, that certain provisions of the sundry civil act in respect to auditing the accounts of the, be repealed	466
Silk culture, report upon the operations of the Woman's Silk Culture Association	110
Sioux City, Iowa, office for district clerk at	411
Sioux reservations, estimate from the Secretary of Interior for expenses of surveying the	284
Sipsey River, report upon survey of	198
Siuslaw River and Bar, Oregon, reports upon survey of	71
Sisseton and Wahpeton Indians, condition of	443
Sitka, Alaska, appropriation to repair Government building at	146, 288

Subject.	No.	Vol.
Slusher, William, depredation claim of	468	37
Smith, Nancy, pension to	457	37
Soldiers, report of Secretary of War relative to burial of indigent ex-Union	58	26
Soldiers' Home:		
Letter from Second Comptroller recommending an increase in the salaries of clerks in his office engaged in adjusting the accounts of the	289	34
Deposit of funds pertaining to the	355	35
Southern Ute Commission, estimate from the Secretary of the Interior to supply a deficiency in the appropriation for the	283	34
Standard measures, estimate from the Superintendent of the Coast and Geodetic Survey for the construction of standard gallons, etc	318	35
Statistical Abstract, letter from the Secretary of the Treasury transmitting the twelfth number of the	13	24
Steam fog whistle, Warwick Point, Rhode Island, recommendation of Secretary of the Treasury for the establishment of a	310	35
Sundry civil act, recommendations of the Second Comptroller and Second and Third Auditors that certain provisions of the, be repealed	466	37
Supervising Architect of Treasury, letter from Secretary of the Treasury relative to the necessity of additional space for the engineering and drafting division of the office of the	302	35
T.		
Target ranges, McPherson, Ga., estimate of Secretary of War of an appropriation for the purchase of land for	53	26
Tariff. (*See* Import duties.)		
Taylor, John, claim of	123	28
Tennessee, claims for witness fees, middle district of	192	31
Tents, submitting draft of a bill to purchase	293	34
Texas, employment of counsel, etc., in the prosecution of suit relating to Greer County	404	37
Thompson Electric Welding Company, process of welding by electricity	279	34
Trade dollar bullion, report of the Director of the Mint in response to resolution of House inquiring why the trade dollar bullion has not been recoined	451	37
Treasurer of the U. S., report on accounts of, for 1889	436	43
Treasury Department:		
Report of the contingent expenses of the, for fiscal year ended June 30, 1889	12	24
Letter from Secretary of the Treasury, asking for appropriation for a special statistical clerk in Bureau of Statistics of the	163	31
Tuthill, Richard H., claim of	434	37
U.		
Umpqua River, Oregon, report upon survey of	199	31
Union Pacific Railway Company, land patents to the	453	37
Union River and Union River Bay, Maine, report of survey of	138	28
United States, judgments in cases against	337	35
United States Civil Service Commission, sixth report of the...[Part 8]	1	18
Upper Columbia River, Washington, report upon survey of	238	32
V.		
Van Pelt, Thomas, claim of	151	31
Villanova, Hermanos & Co., request of Secretary of State for an appropriation to enable him to pay	383	35
W.		
Wappinger's Creek, New York, report upon survey of	25	24

Subject.	No.	Vol.
War Department:		
Additional estimates from Secretary of War of appropriations for increased clerical force required by the Record and Pension Division of the	426	37
Contingent expenses of	128	28
List of employés in	80	26
Money accounts of disbursing officers	255	32
Warrior and Tombigbee Rivers, Alabama and Mississippi, report upon survey of	156	31
Washington Aqueduct:		
Estimate from the Commissioners of District of Columbia of additional appropriation for the	108	28
Relative to liabilities of certain contractors engaged in the construction of tunnel	286 305	34 35
Wedderburn, Alexander J., relating to certain alleged frauds upon the Post Office Department	463	37
Weymouth River, Massachusetts, report upon survey of	26	24
Whitcomb, Aretas, claim of	129	28
Wicomico River, Maryland, report upon survey of	20	24
Wyatt, Daniel F., estimate of Attorney-General of appropriation to pay claim of, deputy United States marshal, for services in opening Oklahoma	367	35
Wyoming, estimate from the Secretary of the Territory of, for payment of expenses of twelfth Territorial assembly	234	32
Y.		
Yellowstone National Park:		
Estimate of Secretary of War for buildings for shelter of troops detailed for the protection of	188	31
Estimate from the acting superintendent of the, of amount necessary to carry into effect the bill before Congress affecting the	331	35
Young's River and Klaskuine River, Oregon, reports upon survey of	69	26
Z.		
Zuni Indian Agency, estimates from the Secretary of the Interior of appropriations for support of Indians and pay of agent at the, N. Mex	287	34

51st Congress, 1st Session. } HOUSE OF REPRESENTATIVES. { Ex. Doc. 1, Part 8.

SIXTH REPORT

OF THE

UNITED STATES

CIVIL SERVICE COMMISSION.

July 1, 1888, to June 30, 1889.

WASHINGTON.
GOVERNMENT PRINTING OFFICE.
1889.

EXTRACT FROM THE ANNUAL MESSAGE OF THE PRESIDENT OF DECEMBER 3, 1888.

On the 4th of March last the Civil Service Commission had but a single member. The vacancies were filled on the 7th day of May, and since then the Commissioners have been industriously, though with an inadequate force, engaged in executing the law. They were assured by me that a cordial support would be given them in the faithful and impartial enforcement of the statute and of the rules and regulations adopted in aid of it.

Heretofore the book of eligibles has been closed to every one, except as certifications were made upon the requisition of the appointing officers. This secrecy was the source of much suspicion and of many charges of favoritism in the administration of the law. What is secret is always suspected; what is open can be judged. The Commission, with the full approval of all its members, has now opened the list of eligibles to the public. The eligible lists for the classified post-offices and custom-houses are now publicly posted in the respective offices, as are also the certifications for appointments. The purpose of the civil-service law was absolutely to exclude any other consideration in connection with appointments under it than that of merit as tested by the examinations. The business proceeds upon the theory that both the examining boards and the appointing officers are absolutely ignorant as to the political views and associations of all persons on the civil-service lists. It is not too much to say, however, that some recent Congressional investigations have somewhat shaken public confidence in the impartiality of the selections for appointment.

The reform of the civil service will make no safe or satisfactory advance until the present law and its equal administration are well established in the confidence of the people. It will be my pleasure, as it is my duty, to see that the law is executed with firmness and impartiality. If some of its provisions have been fraudulently evaded by appointing-officers, our resentment should not suggest the repeal of the law, but reform in its administration. We should have one view of the matter, and hold it with a sincerity that is not affected by the consideration that the party to which we belong is for the time in power.

My predecessor, on the 4th day of January, 1889, by an executive order to take effect March 15, brought the railway mail service under the operation of the civil-service law. Provision was made that the order should take effect sooner in any State where an eligible list was sooner obtained. On the 11th day of March Mr. Lyman, then the only member of the Commission, reported to me in writing that it would not be possible to have the list of eligibles ready before May 1, and requested that the taking effect of the order be postponed until that time, which was done, subject to the same provision contained in the original order as to States in which an eligible list was sooner obtained.

As a result of the revision of the rules, of the new classification, and of the inclusion of the railway mail service, the work of the Commission has been greatly increased, and the present clerical force is found to be inadequate. I recommend that the additional clerks asked by the Commission be appropriated for.

The duty of appointment is devolved by the Constitution or by the law, and the appointing-officers are properly held to a high responsibility in its exercise. The growth of the country and the consequent increase of the civil list have magnified this function of the Executive disproportionally. It can not be denied, however, that the labor connected with this necessary work is increased, often to the point of actual distress, by the sudden and excessive demands that are made upon an incoming administration for removals and appointment. But, on the other hand, it is not true that incumbency is a conclusive argument for a continuance in office. Impartiality, moderation, fidelity to public duty, and a good attainment in the discharge of it must be added before the argument is complete. When those holding administrative offices so conduct themselves as to convince just political opponents that no party consideration or bias affects in any way the discharge of their public duties we can more easily stay the demands for removals.

I am satisfied that both in and out of the classified service great benefit would accrue from the adoption of some system by which the officer would receive the distinction and benefit that in all private employments comes from exceptional faithfulness and efficiency in the performance of duty.

I have suggested to the heads of the Executive Departments that they consider whether a record might not be kept in each bureau of all those elements that are covered by the terms "faithfulness" and "efficiency," and a rating made showing the relative merits of the clerks of each class, this rating to be regarded as a test of merit in making promotions.

I have also suggested to the Postmaster-General that he adopt some plan by which he can, upon the basis of the reports to the Department and of frequent inspections, indicate the relative merit of postmasters of each class. They will be appropriately indicated in the Official Register and in the report of the Department. That a great stimulus would thus be given to the whole service I do not doubt, and such a record would be the best defense against inconsiderate removals from office.

TABLE OF CONTENTS.

	Page.
EXTRACT FROM PRESIDENT'S MESSAGE	II
REPORT	1

APPENDIX.

OFFICERS OF THE COMMISSION	9
PART I.—CIVIL SERVICE ACT, RULES, REGULATIONS, ETC.:	
EXHIBIT 1. Civil service act	11
2. Sections of Revised Statutes and of Statutes at Large	15
3. Revised civil-service rules	16
General rules	16
Departmental rules	20
Special departmental rules	26
Customs rules	28
Special customs rules	32
Postal rules	33
Railway mail rules	36
4. Revised civil-service regulations	41
5. Regulations governing promotions in the classified departmental service applied to the Department of War	52
6. Regulations governing promotions in the classified service of the customs district of New York	55
7. The classified service:	
Definition	56
Extent of classified departmental service	56
Extent of classified customs service	57
Objections to present classification of customs service	57
Substitute recommended for customs classification	57
Extent of classified postal service	58
Proposed classification of post-office service	58
Extent of classified railway mail service	59
Numbers embraced within the classified service	59
8. Classifications	59
9. Places authorized to be filled by non-competitive examination	62
10. Places excepted from examination	63
11. Appointments under General Rule III, section 2 (c), and classification. Suggestions by the President	67
12. Numbers brought into the classified departmental service by revision and extension of classification on June 29, 1888	68
13. Notes on the rules	69
14. Opinions of the Attorney General	80
15. Statement of numbers employed at the classified postoffices	91
16. Communication giving views upon examination for librarian	94
17. Schedule of examinations for 1890	95
18. Instructions to applicants, departmental service	102

Page.

PART II.—STATISTICAL INFORMATION, EXAMINATIONS, APPOINTMENTS, ETC.:

1. EXAMINATIONS.

TABLE 1. Showing numbers of applications for examinations for the departmental service 110
2. Same, railway mail service 116
3. Showing numbers eligible, ineligible, average age, and education of those examined for the railway mail service 117
4. Showing dates and places of examinations, numbers eligible and ineligible for the departmental and railway mail service 118

DEPARTMENTAL SERVICE.

5. Showing by States numbers eligible and ineligible, average age, and education of those who took the clerk and copyist examinations 130
6. Same, examinations for Bureau of Pensions 134
7. Same, examinations for post-office inspector 136
8. Same, examinations for assistant examiner, Patent Office 137
9. Same, examinations for book-keeper 138
10. Same, examinations for clerk, State Department 138
11. Same, examinations for computers 139
12. Same, examinations for expert in nautical science, expert in naval science and affairs, book-keeper and expert, and assistant astronomer, Navy Department 140
13. Same, examinations for civil engineer and assistant civil engineer, War Department 141
14. Same, examinations for draughtsman and copyist of drawings. 141
15. Same, examinations for sanitary expert, heating and ventilating expert, and constructor in metal, office of Superyising Architect 144
16. Same, examination for law clerk, office of the judge-advocate-general, War Department 145
17. Same, examinations for Department of Agriculture 145
18. Same, examination for proof-reader, Geological Survey 146
19. Same, examination for craniological expert, War Department .. 147
20. Same, examination for printer's assistant and skilled helper, Bureau of Engraving and Printing 148
21. Same, non-competitive examinations for places for which competitive examinations can not be properly provided under General Rule III, section 2 (*c*) 148
22. Same, non-competitive examinations, for promotion into the classified service, under General Rule III, section 2 (*c*) 151
23. Same, non-competitive examinations for appointment of substitutes to the places of their principals, under Special Departmental Rule II (Promotion examinations, War Department) .. 152
24. Same, examinations for transfer from excepted to unexcepted places, under Departmental Rule II, section 4 153
25. Same, examinations for transfer from one Department to another, under Departmental Rule VIII, section 1 (*a*) 153
26. Same, examinations for transfer between post-offices, the railway mail service, and the Post-Office Department, under Departmental Rule VIII, section 1 (*c*) 153

Page.

PART II.—STATISTICAL INFORMATION, ETC.—Continued.

TABLE 27. Same, examinations for promotion copyist to clerk, after service of one year, under Departmental Rule IX, section 1 (*b*) 153

28. Showing by States numbers eligible and ineligible of those who took supplementary examinations 154

CUSTOMS SERVICE.

29. Showing numbers eligible and ineligible, average age, and education of those examined for the customs service..... 155

29. *Supplementary.* Showing numbers eligible and ineligible of those examined for promotion New York Custom-House..... 160

POST-OFFICE SERVICE.

30. Showing numbers eligible and ineligible, average age, and education of those examined for the postal service..... 161

ENTIRE CLASSIFIED SERVICE.

31. Showing for all grades of competitors, in all branches of the classified service, the numbers examined, eligible and ineligible, average age, and education, and percentage of eligibles. 165

2. APPOINTMENTS, DEPARTMENTAL SERVICE.

32. Showing by States numbers of those appointed in the departmental service and the apportionment..... 169

33. Showing by examinations numbers of those appointed 171

34. Showing appointments of military and naval preference claimants under section 1754, R. S..... 172

35. Showing numbers of separations and re-instatements..... 172

36. Showing by States names of those appointed charged to the general apportionment, with changes in grade or status..... 173

37. Showing by States names of those appointed charged to the female copyist apportionment..... 185

38. Showing names of those appointed printers' assistants, Bureau of Engraving and Printing..... 186

39. Showing changes in grade or status of persons appointed prior to July 1, 1888..... 187

RAILWAY MAIL SERVICE.

40. Showing appointments by States..... 196

41. Showing re-instatements by States..... 196

42. Showing numbers separated 196

CUSTOMS SERVICE.

43. Showing appointments and separations..... 197

POST-OFFICE SERVICE.

44. Showing appointments and separations..... 198

ENTIRE CLASSIFIED SERVICE.

45. Showing for all branches of the classified service the number examined, the number who failed, and the percentage of failures, the number who passed, the number appointed, and the percentage of those that passed who were appointed since July 16, 1883..... 200

Page.

PART III.—SPECIMEN EXAMINATION QUESTIONS.

DEPARTMENTAL EXAMINATIONS:

1. Clerk 201
2. Copyist 205
3. Printer's assistant and skilled helper, Bureau of Printing and Engraving 208
4. Special pension examiner 209
5. Medical pension examiner 211
6. Assistant examiner of the Patent Office 213
7. State Department 214
8. Book-keeper 216
9. Post-office inspector 218
10. Topographic aids—Geological Survey 223
11. Meteorological clerk 225
12. Topographical draughtsmen 227
13. Copyist of mechanical drawings 230
14. Mechanical draughtsman 232
15. Civil engineer—Quartermaster-General's office 238
16. Architectural draughtsman—Quartermaster-General's office 239
17. Architectural draughtsman—Supervising Architect's office 240
18. Metal constructor—Supervising Architect's office 242
19. Sanitary expert—Supervising Architect's office 246
20. Computer's examination 247
21. Other special examinations 249
22. Type-writing (supplementary) 250
23. Stenography (supplementary) 253
24. Modern languages (supplementary) 254
25. Law (supplementary) 257
26. Proof-reading (supplementary) 257

CUSTOMS' SERVICE EXAMINATIONS:

27. Clerk 258
28. Day inspector 259
29. Night inspector 261
30. Inspectress 262
31. Assistant weigher 263
32. Other special customs examinations 264

POSTAL SERVICE EXAMINATIONS:

33. Clerk 265
34. Carrier 267
35. Messenger 268

RAILWAY MAIL SERVICE EXAMINATIONS:

36. Clerk 270

REPORT

OF THE

UNITED STATES CIVIL SERVICE COMMISSION.

WASHINGTON, D. C., *November* 14, 1889.

SIR: The classified civil service, which alone comes under the jurisdiction of the Civil Service Commission, now includes about 28,000 Governmental employés, embraced in four divisions, viz, the Departmental Service, the Postal Service, the Customs Service, and the Railway Mail Service. It is estimated that the aggregate of the salaries of these 28,000 employés about equals the aggregate of the salaries of all the other minor employés of the Government.

Therefore, of those in the service of the Government—that is, in the service of the American people—nearly a fourth in point of numbers, and about a half in point of importance, are now withdrawn from the influences of the patronage system, and are appointed, not because they are adherents of this or that political leader, but because they are deemed likely to be honest and capable servants of the people at large.

The President has authority to extend the limits of the classified service in certain directions; and the Commission will accordingly report to the President as fast as it deems such extensions wise and practicable. But there are two or three points as to which it is desirable that action be taken by Congress. The Commission is now required and directed by law to make examinations touching the enforcement and effect of the civil-service rules and regulations; and therefore the Commission should be given power to administer oaths. Great inconvenience and no little detriment to the public service result from the lack of this power.

The minimum limit for the number of employés in the classified post-offices should be fixed at twenty-five instead of at fifty. This would add not far from fifty offices to the forty-three now classified.

Experience has clearly shown that the local boards of examiners should be at least partially independent of the appointing officers. This end can be attained in many cases by placing on the boards persons not in the Governmental employ; and the law should be so amended as to

permit this being done, even if such persons are not (though they ought to be) paid for their services. The members of these boards are at present required to do all the extra work entailed on them by their connection with the Commission without any remuneration whatever; certainly the secretaries at least should be paid. It would be even better to have provision made for marking the papers of all examinations at the office of the Commission in Washington. One central board of twenty examiners, at Washington, could do all the marking; and such an arrangement would render it nearly impossible that there should be any suspicion, even, of fraud and wrong-doing.

The Commission wishes especially to emphasize the need of adequate means wherewith to carry on the important work intrusted to its care. The sum of money at present appropriated for the expenses of the Commission is altogether insufficient for the purpose, in spite of the exercise of the most rigid economy. The employés of the Commission are continually overworked. During the hot weather of last summer, when many of the clerks in the other Departments had their hours of labor shortened, those in the employ of the Commission were obliged constantly to work over time. Yet notwithstanding this extra exertion the work of marking examination papers was fully two months in arrears at the close of the fiscal year, and in spite of the most strenuous efforts it has continued to fall behind until now it is about ninety days in arrears, there being on hand about two thousand sets of papers unmarked. With a sufficient clerical and examining force the papers could be marked as fast as they come in. During the last fiscal year the number of applicants examined was about 20,000, as against 11,000 the preceding year; thus very nearly doubling the work accomplished while the working force remained exactly the same. This insufficiency of funds works little hardship to the Commissioners themselves; but it is very unjust to the clerks and examiners, it tells severely against the unfortunate applicants, who are kept months in ignorance of their fate in the examinations, and it bids fair at no distant date to work serious harm to the public service. Hitherto, by great exertions, the Commission has kept fairly well supplied the lists of eligibles on which calls are most often made; but it is growing impossible to comply with the demands made upon some of these lists. There may be a division of opinion as to whether there should or should not be a civil-service law at all, but surely there can be none as to its being properly enforced while on the statute book, and as to the Commission's being given sufficient means to enforce it. Common honesty demands that while the law exists there be sufficient money appropriated to carry it into effect. Considering the vital importance of the work, the amount that is needed is absolutely insignificant—so insignificant that there can be no hesitation in granting it on the score of economy. The Commission now has fourteen employés in all; it needs to do its present work, at least eight more, their total sal-

aries amounting to about $10,000; and to increase the work of the Commission in any direction, as will undoubtedly be necessary, it will also be necessary to still further increase its force. Moreover, about $6,500 will be needed for traveling expenses, being an increase of $1,250 over the appropriation for the current year; and to pay the secretaries of the local boards $100 each, the further sum of about $6,000 would be necessary. Therefore the requirements to enable the Commission efficiently to discharge merely its present duties will be about $18,000 over and above the sum appropriated this year, or a total appropriaton of $53,000. To extend the system as it ought to be extended the appropriations would need to be proportionately larger.

During the fiscal year ending June 30, 1889, the classified service was extended so as to take in the Railway Mail Service. It now includes about twice the number of employés that it did when first organized in 1883.

The Commission calls attention to its recommendation in its last report for a change in the customs classification, and earnestly recommends that the lower limit of the classification be based on the character of the service; that is, on designation and duty and not, as at present, on compensation.

The most important changes made in the rules during the year were the adoption of the rules governing the Railway Mail Service, which went into effect on May 1; of the amendment to Departmental Rule X and Customs and Postal Rule VII, approved June 18, 1889, by which veterans in the late war formerly in the classified civil service are allowed to be reinstated without reference to the length of time that has elapsed from the severance of their connection therewith.

A most important change in the policy of the Commission was instituted by the adoption, on June 29, 1889, of the regulation requiring that the lists of eligibles—that is, of those applicants successfully passing the examinations—be made public, with the grade of each eligible attached. The adoption of this regulation has already had a most beneficial effect. It is especially desirable that all proceedings under the law should be free from the slightest taint or suspicion of fraud; and it is therefore important that they should be as open as possible. The marking is done by special experts, ignorant even of the names of the candidates whose papers are marked, and great care is taken to prevent the questions being known in advance. But every step in the proceedings is made with the utmost publicity; and each candidate's examination papers are preserved, so that it is perfectly easy to review them, and compare them with others, if there is the least suspicion of injustice or of unfair treatment. It is necessary to allow the appointing officer a certain liberty of rejection; and by the present civil service rules he can reject two out of every five candidates; but it is only in the rejection of these two that there is any chance whatever for showing personal or political favoritism, and even in this

very narrow range it can be shown by the appointing officer only, and not by the Civil Service Commission, or the local civil service boards. Sometimes rejected or disappointed applicants or their friends complain that they have been treated unfairly. Whenever such a complaint is made to the Commission it is invariably investigated fully, and almost as invariably it is found that the complaint is wholly without foundation.

As is inevitable, there is a certain amount of friction in changing from the former to the present or merit system of making appointments. Occasionally in extending the limits of the service some employés are included in the competitive examination class, only to find on further trial that under the present conditions such inclusion is impracticable, and that the employés so included must be excepted from examination.

During the last summer a number of investigations were conducted by the Commission into various local offices against which there had been charges of wrong doing. Sometimes the charges proved baseless. Whenever it was found that there had been actual misconduct on the part of some official the dismissal of the delinquent was recommended, or, if the case was of sufficient gravity, his prosecution by the Department of Justice was advised. These investigations are among the most important duties of the Commission; for, as far as possible, it is desired to keep the most vigilant watch to prevent the violation or evasion of the law. This is comparatively easy as far as appointments are concerned; but it is a more difficult matter to exercise a proper check on removals, and at the same time not to interfere with departmental discipline. But any sweeping and wholesale removals of large numbers of employés in the classified service, for causes not in each case fully specified, certainly create a very strong presumption that they are made for political, and therefore improper, reasons; and the Commission holds that if in any Department or office a very large proportion of the employés is changed the burden of proof should be considered to rest on the officer making the change to show that his conduct was proper, and a failure on his part to establish the necessity for these changes ought to be held to warrant his dismissal.

The merit system of making appointments to minor governmental positions, as contrasted with the patronage system, whereby these appointments were made as the rewards of personal or political service, is no longer in the merely experimental stage. It is not on probation. It has been given full trial; and wherever this trial has been fair the system has worked admirably. The offices in which the law has been most faithfully observed have been precisely those offices which afforded conspicuous examples of efficiency and honesty in the conduct of the public business. Wherever a public officer has gone into office a thorough believer in the merit system, or wherever, even if not a believer, he has been honestly desirous of giving the system a fair trial, it has invariably been the case that the law has worked well and produced good results.

It is not contended that the system is ideally perfect; no governmental methods are. From time to time there have been shown certain defects in the working of the civil service law and rules, though most of these defects already have been, and it is believed that the majority of the remainder soon will be, remedied. But it is most emphatically contended that the merit system shows to very great advantage when compared with any other, whether actual or proposed; and this is especially the case when the comparison is made with the patronage system, which it is now slowly but surely supplanting. The fundamental proposition of the new system is that every American citizen has a right to serve the public (provided that his services are needed) if on his merits he is able to show that he is the man most capable of filling the position he seeks, and all he is required to do is to show this superior capacity in fair competition with other American citizens. In other words, the system is one of common honesty and of fair play for all, and therefore it is essentially American and essentially democratic. The object of the law is to give to the average American citizen what it takes away from the professional politician. How little this object is understood by some men in public life may be gathered from recent proposals to parcel out all the offices among the different Congressional districts according to the political faith of the Congressmen representing them. This would, of course, simply mean a revival of the patronage system, with an added touch of chaos. It is apparently brought forward in the simple faith that all that is needed is to divide the offices among the politicians of both parties instead of among those of only one, and ignores the very common-sense view, which insists that the offices are not the property of the politicians at all, whether of one party or of the other or of both; but, on the contrary, that they belong to the people, and should be filled only with reference to the needs of the public service.

It seems worth while to answer one or two of the accusations often brought against the merit system by its opponents. These accusations have been so incessantly repeated that many people have finally come to believe them.

One of these accusations is that the examinations are of such a character as to favor "boys fresh from school" at the expense of men of maturer age, experience, and capacity. This is simply incorrect. In the last report of the Commission full tables bearing on the subject are given. By these it is shown that nearly two-thirds of the applicants for examination succeed in passing, and that of those passing about two-fifths are appointed, the figures proving, by the way, that those that have had a good common-school education do about as well as those who have graduated from college. A glance at these tables shows that the average age of those passing the examinations for the ordinary governmental positions, such as clerk, copyist, letter-carrier, and the like, is about twenty-eight years. In other words, the

examinations for these positions are especially suited, not to school boys, but to men in the prime of life, with experience of the world, who have left school for at least ten years. The most common accusation, however, is that the examinations are "scholastic," or of an "impractical" character; that, as is often asserted, the Commission does not give practical tests, but asks questions "about the sciences," or, at least, on irrelevant subjects. All such statements as these are without foundation; and if those who make them do so in good faith it is only because they have not taken the trouble to ascertain the facts. As a matter of fact, special care is taken to have the examinations as practical in character as possible, and to test each candidate on precisely those subjects demanded by the character of the work in the branch of the service to which he is seeking admission. The Commission strongly objects to irrelevant questions, and surely there can be no questions more irrelevant to a man's duties as clerk or letter-carrier than are inquiries as to how he voted at the last election and how strong his political backing is; and these are precisely the questions that many of the men who thus object to the examinations as "impractical" are in reality desirous of asking.

Examinations are held for scores of different places; and for each place appropriate tests are provided. Thus, it is necessary for an assistant chemist to know something of chemistry, and for an assistant astronomer to know something of astronomy; and applicants for such positions are questioned accordingly. A would-be stenographer and type-writer is examined in stenography and type-writing. But the great bulk of applicants—probably over 90 per cent.—apply for positions as clerk, copyist, letter-carrier, and the like; and the examinations for these positions are those by which the system can best be tested. For each of these positions there is a plain, practical, common-sense examination, such as would appear to the average intelligence to be best suited to find out the men who possess in the highest degree the qualities needed. A copyist is examined on but four subjects—spelling, penmanship, elementary arithmetic, and copying from dictation, from plain copy, and from a rough draft. His duties as a copyist makes it necessary for him to spell well, to write a good legible hand, to solve simple problems in arithmetic, and to make a clear, neat-looking copy of a first draft of a letter which is filled with interlineations and erasures; and accordingly these four points are the very ones on which he is examined. A clerk's examination is a little harder, for besides the above-mentioned subjects he is required to show that he can write an intelligent letter on some given topic, that he can turn ungrammatical sentences into good English, that he knows how to keep accounts, and finally that he knows something of United States geography, government, and history. Every question, except the last, has a direct bearing upon the duties to which the clerk will be put as soon as he has been appointed. The only objection that can possibly be

made is to the questions about the geography and history of the United States (and no other questions are asked in history and geography); but these combined never count for more than 5 per cent. in the examination, so that an applicant need not answer them at all, and may yet attain an average of 95 per cent. Moreover, these questions are a test of a man's general intelligence. Every good American citizen ought to possess a rudimentary knowledge of his country's history, geography, and government.

Examinations for all the ordinary minor positions are based upon the two for clerk and copyist, some of the questions being dropped and others substituted in each case, according to the character of the work in the special place applied for. Thus, a letter-carrier has to show good knowledge of the local geography of his vicinity—its railway stations, big commercial buildings, and the like. Or, again, a railway-mail clerk has to show acquaintance with the railway systems of his State and section, and to make it evident that he can read off a large number of addresses with speed and accuracy.

Such are fair samples of the tests applied to the great majority of the candidates who come before the examining boards; and if questions on the points indicated above are not practical and pertinent to the duties of the positions sought for, then it would be hard to know what questions are.

Occasionally some one, in attacking the examinations as impractical or as being too severe and scholastic in character, quotes a question asked one class and speaks as if it was asked another; for instance, he will speak as if a clerk had been asked questions in geology, or a copyist questions in chemistry. If he does not do this he invents a series of questions, which he then proceeds to comment on as if they were genuine, and takes great satisfaction in demolishing a straw antagonist who has no existence save in his own imagination.

In the report of the Commission printed last June a complete series of the questions asked in a variety of examinations was given. These have now been before the public for six months, and yet, as far as is known to the Commission, no one has ventured to attack them or to specify such as are impractical and improper. Doubtless out of the thousands of questions continually prepared there occasionally occur some which it would be better to leave unasked; but the Commission challenges any one to produce a series of examination papers, now or recently in use, in which the questions are not proper and practical as a whole.

The Commission emphatically asserts that the examinations are of such a character as to afford good common-sense business tests of the fitness of the applicants for the special duties of their positions; that in Washington itself the law is faithfully and honestly executed, without fear or favor, all competitors, without regard to party, standing an equal chance, and being examined, marked, and certified with impartial

justice, while the efforts to attain similar results in the local offices are being rewarded by a constantly increasing measure of success. Finally, it points to that best of tests, experience, as clearly showing that the offices in which the merit system has been most fairly tried are precisely the offices in which the best public work has been done.

Reference is made to the appendix for the statements and tables exhibiting in detail the work of the year; for the civil-service law, rules and regulations; the schedule of examinations for 1890; classifications; specimen sets of questions of the more important examinations, or those in more constant use; and the full reports of the investigations made and comments thereon.

We have the honor to be, your obedient servants,

CHARLES LYMAN,
THEODORE ROOSEVELT,
HUGH S. THOMPSON,
Commissioners.

The PRESIDENT.

UNITED STATES CIVIL SERVICE COMMISSION.

COMMISSIONERS:

CHARLES LYMAN, Connecticut, *President.*
THEODORE ROOSEVELT, New York.
HUGH S. THOMPSON, South Carolina.

WM. H. WEBSTER, *Chief Examiner.*
JOHN T. DOYLE, *Secretary.*

On October 10, 1888, John H. Oberly, of Illinois, who had served as commissioner from April 17, 1886, retired, and on February 9, 1889, Alfred P. Edgerton, of Indiana, who had served as commissioner and president of the commission from November 9, 1885, was removed. On May 7, 1889, Theodore Roosevelt, of New York, and Hugh S. Thompson, of South Carolina, were appointed commissioners

APPENDICES.

[Chapter 27, Statutes at Large, vol. 22, p. 403.]

AN ACT to regulate and improve the civil service of the United States.

Be it enacted by the Senate and House of Representatives of the United States of America in Congress assembled, That the President is authorized to appoint, by and with the advice and consent of the Senate, three persons, not more than two of whom shall be adherents of the same party, as Civil Service Commissioners, and said three commissioners shall constitute the United States Civil Service Commission. Said commissioners shall hold no other official place under the United States.

The President may remove any commissioner; and any vacancy in the position of commissioner shall be so filled by the President, by and with the advice and consent of the Senate, as to conform to said conditions for the first selection of commissioners.

The commissioners shall each receive a salary of three thousand five hundred dollars a year. And each of said commissioners shall be paid his necessary traveling expenses incurred in the discharge of his duty as a commissioner.

SEC. 2. That it shall be the duty of said commissioners:

First. To aid the President, as he may request, in preparing suitable rules for carrying this act into effect, and when said rules shall have been promulgated it shall be the duty of all officers of the United States in the departments and offices to which any such rules may relate to aid, in all proper ways, in carrying said rules, and any modifications thereof, into effect.

Second. And, among other things, said rules shall provide and declare, as nearly as the conditions of good administration will warrant, as follows:

First, for open, competitive examinations for testing the fitness of applicants for the public service now classified or to be classified hereunder. Such examinations shall be practical in their character, and so far as may be shall relate to those matters which will fairly test the relative capacity and fitness of the persons examined to discharge the duties of the service into which they seek to be appointed.

Second, that all the offices, places, and employments so arranged or to be arranged in classes shall be filled by selections according to grade from among those graded highest as the results of such competitive examinations.

Third, appointments to the public service aforesaid in the departments at Washington shall be apportioned among the several States and Territories and the District of Columbia upon the basis of population as ascertained at the last preceding census. Every application for an examination shall contain, among other things, a statement, under oath, setting forth his or her actual bona fide residence at the time of making the application, as well as how long he or she has been a resident of such place.

Fourth, that there shall be a period of probation before any absolute appointment or employment aforesaid.

Fifth, that no person in the public service is for that reason under any obligations to contribute to any political fund, or to render any political service, and that he will not be removed or otherwise prejudiced for refusing to do so.

Sixth, that no person in said service has any right to use his official authority or influence to coerce the political action of any person or body.

Seventh, there shall be non-competitive examinations in all proper cases before the commission, when competent persons do not compete, after notice has been given of the existence of the vacancy, under such rules as may be prescribed by the commissioners as to the manner of giving notice.

Eighth, that notice shall be given in writing by the appointing power to said commission of the persons selected for appointment or employment from among those who have been examined, of the place of residence of such persons, of the rejection of any such persons after probation, of transfers, resignations, and removals, and of the date thereof, and a record of the same shall be kept by said commission.

And any necessary exceptions from said eight fundamental provisions of the rules shall be set forth in connection with such rules, and the reasons therefor shall be stated in the annual reports of the commission.

Third. Said commission shall, subject to the rules that may be made by the President, make regulations for, and have control of, such examinations, and, through its members or the examiners, it shall supervise and preserve the records of the same; and said commission shall keep minutes of its own proceedings.

Fourth. Said commission may make investigations concerning the facts, and may report upon all matters touching the enforcement and effects of said rules and regulations, and concerning the action of any examiner or board of examiners hereinafter provided for, and its own subordinates, and those in the public service, in respect to the execution of this act.

Fifth. Said commission shall make an annual report to the President for transmission to Congress, showing its own action, the rules and regulations and the exceptions thereto in force, the practical effects thereof, and any suggestions it may approve for the more effectual accomplishment of the purposes of this act.

SEC. 3. That said commission is authorized to employ a chief examiner, a part of whose duty it shall be, under its direction, to act with the examining boards, so far as practicable, whether at Washington or elsewhere, and to secure accuracy, uniformity, and justice in all their proceedings, which shall be at all times open to him. The chief examiner shall be entitled to receive a salary at the rate of three thousand dollars a year, and he shall be paid his necessary traveling expenses incurred in the discharge of his duty. The commission shall have a secretary, to be appointed by the President, who shall receive a salary of one thousand six hundred dollars per annum. It may, when necessary, employ a stenographer, and a messenger, who shall be paid, when employed, the former at the rate of one thousand six hundred dollars a year, and the latter at the rate of six hundred dollars a year. The commission shall, at Washington, and in one or more places in each State and Territory where examinations are to take place, designate and select a suitable number of persons, not less than three, in the official service of the United States, residing in said State or Territory, after consulting the head of the department or office in which such persons serve, to be members of boards of examiners, and may at any time substitute any other person in said service living in such State or Territory in the place of any one so selected. Such boards of examiners shall be so located as to make it reasonably convenient and inexpensive for applicants to attend before them; and where there are persons to be examined in any State or Territory, examinations shall be held therein at least twice in each year. It shall be the duty of the collector, postmaster, and other officers of the United States, at any place outside of the District of Columbia where examinations are directed by the President or by said board to be held, to allow the reasonable use of the public buildings for holding such examinations, and in all proper ways to facilitate the same.

SEC. 4. That it shall be the duty of the Secretary of the Interior to cause suitable and convenient rooms and accommodations to be assigned or provided, and to be furnished, heated, and lighted, at the city of Washington, for carrying on the work of said commission and said examinations, and to cause the necessary stationery and

other articles to be supplied, and the necessary printing to be done for said commission.

SEC. 5. That any said commisioner, examiner, copyist, or messenger, or any person in the public service who shall willfully and corruptly, by himself or in co-operation with one or more other persons, defeat, deceive, or obstruct any person in respect of his or her right of examination according to any such rules and regulations, or who shall willfully, corruptly, and falsely mark, grade, estimate, or report upon the examination or proper standing of any person examined hereunder, or aid in so doing, or who shall willfully and corruptly make any false representations concerning the same or concerning the person examined, or who shall willfully and corruptly furnish to any person any special or secret information for the purpose of either improving or injuring the prospects or chances of any person so examined, or to be examined, being appointed, employed or promoted, shall for each such offense be deemed guilty of a misdemeanor, and upon conviction thereof, shall be punished by a fine of not less than one hundred dollars, nor more than one thousand dollars, or by imprisonment not less than ten days, nor more than one year, or by both such fine and imprisonment.

SEC. 6. That within sixty days after the passage of this act it shall be the duty of the Secretary of the Treasury, in as near conformity as may be to the classification of certain clerks now existing under the one hundred and sixty-third section of the Revised Statutes, to arrange in classes the several clerks and persons employed by the collector, naval officer, surveyor, and appraisers, or either of them, or being in the public service, at their respective offices in each customs district where the whole number of said clerks and persons shall be all together as many as fifty. And thereafter, from time to time, on the direction of the President, said Secretary shall make the like classification or arrangement of clerks and persons so employed, in connection with any said office or offices, in any other customs district. And, upon like request, and for the purposes of this act, said Secretary shall arrange in one or more of said classes, or of existing classes, any other clerks, agents, or persons employed under his department in any said district not now classified; and every such arrangement and classification upon being made shall be reported to the President.

Second. Within said sixty days it shall be the duty of the Postmaster-General, in general conformity to said one hundred and sixty-third section, to separately arrange in classes the several clerks and persons employed, or in the public service, at each post-office, or under any postmaster of the United States, where the whole number of said clerks and persons shall together amount to as many as fifty. And thereafter, from time to time, on the direction of the President, it shall be the duty of the Postmaster-General to arrange in like classes the clerks and persons so employed in the postal service in connection with any other post-office; and every such arrangement and classification upon being made shall be reported to the President.

Third. That from time to time said Secretary, the Postmaster-General, and each of the heads of departments mentioned in the one hundred and fifty-eighth section of the Revised Statutes, and each head of an office shall, on the direction of the President, and for facilitating the execution of this act, respectively revise any then existing classification or arrangement of those in their respective departments and offices, and shall, for the purposes of the examination herein provided for, include in one or more of such classes, so far as practicable, subordinate places, clerks, and officers in the public service pertaining to their respective departments not before classified for examination.

SEC. 7. That after the expiration of six months from the passage of this act no officer or clerk shall be appointed, and no person shall be employed to enter or be promoted in either of the said classes now existing, or that may be arranged hereunder pursuant to said rules, until he has passed an examination, or is shown to be specially exempted from such examination in conformity herewith. But nothing herein contained shall be construed to take from those honorably discharged from the military or naval service any preference conferred by the seventeen hundred and

fifty-fourth section of the Revised Statutes, nor to take from the President any thority not inconsistent with this act conferred by the seventeen hundred and fi third section of said statutes; nor shall any officer not in the executive branch of government, or any person merely employed as a laborer or workman, be requ to be classified hereunder; nor, unless by direction of the Senate, shall any per who has been nominated for confirmation by the Senate be required to be classi or to pass an examination.

SEC. 8. That no person habitually using intoxicating beverages to excess shal appointed to, or retained in, any office, appointment, or employment to which provisions of this act are applicable.

SEC. 9. That whenever there are already two or more members of a family in public service in the grades covered by this act, no other member of such fam shall be eligible to appointment to any of said grades.

SEC. 10. That no recommendation of any person who shall apply for office or pl under the provisions of this act, which may be given by any Senator or Membe the House of Representatives, except as to the character or residence of the ap cant, shall be received or considered by any person concerned in making any ex ination or appointment under this act.

SEC. 11. That no Senator, or Representative, or Territorial Delegate of the C gress, or Senator, Representative, or Delegate elect, or any officer or employ either of said houses, and no executive, judicial, military, or naval officer of United States, and no clerk or employé of any department, branch, or bureau of executive, judicial, or military, or naval service of the United States, shall, dire or indirectly, solicit or receive, or be in any manner concerned in soliciting or rec ing, any assessment, subscription, or contribution for any political purpose wh ever, from any officer, clerk, or employé of the United States, or any departme branch, or bureau thereof, or from any person receiving any salary or compensat from moneys derived from the Treasury of the United States.

SEC. 12. That no person shall, in any room or building occupied in the discha of official duties by any officer or employé of the United States mentioned in t act, or in any navy-yard, fort, or arsenal, solicit in any manner whatever, or rece any contribution of money or any other thing of value for any political purp whatever.

SEC. 13. No officer or employé of the United States mentioned in this act sh discharge, or promote, or degrade, or in any manner change the official rank or co pensation of any other officer or employé, or promise or threaten so to do, for giv or withholding or neglecting to make any contribution of money or other valua thing for any political purpose.

SEC. 14. That no officer, clerk, or other person in the service of the United Sta shall, directly or indirectly, give or hand over to any other officer, clerk, or per in the service of the United States, or to any Senator or Member of the Hous Representatives, or Territorial Delegate, any money or other valuable thing on count of or to be applied to the promotion of any political object whatever.

SEC. 15. That any person who shall be guilty of violating any provision of four foregoing sections shall be deemed guilty of a misdemeanor, and shall, on c viction thereof, be punished by a fine not exceeding five thousand dollars, or by prisonment for a term not exceeding three years, or by such fine and imprisonm both, in the discretion of the court.

Approved, January 16, 1883.

SECTIONS OF REVISED STATUTES AND OF STATUTES AT LARGE.

SECTIONS OF REVISED STATUTES.

SEC. 1753. The President is authorized to prescribe such regulations for the admission of persons into the civil service of the United States as may best promote the efficiency thereof, and ascertain the fitness of each candidate in respect to age, health, character, knowledge, and ability for the branch of service into which he seeks to enter; and for this purpose he may employ suitable persons to conduct such inquiries, and may prescribe their duties, and establish regulations for the conduct of persons who may receive appointments in the civil service.

SEC. 1754. Persons honorably discharged from the military or naval service by reason of disability resulting from wounds or sickness incurred in the line of duty, shall be preferred for appointments to civil offices, provided they are found to possess the business capacity necessary for the proper discharge of the duties of such offices.

SEC. 1781. Every member of Congress or any officer or agent of the Government who, directly or indirectly, takes, receives, or agrees to receive, any money, property, or other valuable consideration whatever, from any person for procuring, or aiding to procure, any contract, office, or place from the Government or any Department thereof, or from any officer of the United States, for any person whatever, or for giving any such contract, office, or place to any person whomsoever, and every person who, directly or indirectly, offers or agrees to give, or gives, or bestows any money, property, or other valuable consideration whatever, for the procuring or aiding to procure any such contract, office, or place, and every member of Congress who, directly or indirectly, takes, receives, or agrees to receive any money, property, or other valuable consideration whatever after his election as such member, for his attention to, services, action, vote, or decision on any question, matter, cause, or proceeding which may then be pending, or may by law or under the Constitution be brought before him in his official capacity, or in his place as such member of Congress, shall be deemed guilty of a misdemeanor, and shall be imprisoned not more than two years and fined not more than ten thousand dollars. And any such contract or agreement may, at the option of the President, be declared absolutely null and void; and any member of Congress or officer convicted of a violation of this section, shall, moreover, be disqualified from holding any office of honor, profit, or trust under the Government of the United States.

SECTIONS OF STATUTES AT LARGE.

SEC. 3. * * * *Provided*, That in making any reduction of force in any of the Executive Departments, the head of such Department shall retain those persons who may be equally qualified who have been honorably discharged from the military or naval service of the United States, and the widows and orphans of deceased soldiers and sailors. (19 Stats. 169.)

SEC. 4. That no civil officer, clerk, draughtsman, copyist, messenger, assistant messenger, mechanic, watchman, laborer, or other employé shall, after the first day of October next, be employed in any of the Executive Departments, or subordinate bureaus or offices thereof at the seat of Government, except only at such rates and in such numbers, respectively, as may be specifically appropriated for by Congress for such clerical and other personal services for each fiscal year; and no civil officer, clerk, draughtsman, copyist, messenger, assistant messenger, mechanic, watchman, laborer, or other employé shall hereafter be employed at the seat of Government in any Executive Department or subordinate bureau or office thereof, or be paid from any appropriation made for contingent expenses, or for any specific or general purpose, unless such employment is authorized and payment therefor specifically provided in the law granting the appropriation,

and then only for services actually rendered in connection with and for the purpc appropriation from which payment is made, and at the rate of compensation proper for such services, and after the first day of October next, section one hu seventy-two of the Revised Statutes, and all other laws and parts of laws inconsis the provisions of this act, and all laws and parts of laws authorizing the employm cers, clerks, draughtsmen, copyists, messengers, assistant messengers, mechani men, laborers, or other employés at a different rate of pay, or in excess of the authorized by appropriations made by Congress be, and they are hereby, repe thereafter all details of civil officers, clerks, or other subordinate employés fr outside of the District of Columbia, for duty within the District of Columb temporary details for duty connected with their respective offices, be, and ar prohibited; and thereafter all moneys accruing from lapsed salaries, or from u propriations for salaries, shall be covered into the Treasury: *Provided*, That herein specifically appropriated for clerical or other force heretofore paid for o eral or specific appropriations, may be used by the several heads of Departme such force until the said several heads of Departments shall have adjusted the in accordance with the provisions of this act; and such adjustment shall be ef fore October 1, 1882. And in making such adjustment the employés herein pr shall, as far as may be consistent with the interests of the service, be apportion the several States and Territories according to population: *Provided, further*, person performing duty in any capacity as officer, clerk, or otherwise, in any De at the date of the passage of this act, who has heretofore been paid from any a tion made for contingent expenses or for any contingent or general purpose, a office or place is specifically provided for herein, under the direction of the he Department, may be continued in such office, clerkship, or employment with appointment thereto, but shall be charged to the quotas of the several States tories from which they are respectively appointed, and nothing herein shall be to repeal or modify section one hundred and sixty-six of the Revised Statut United States. (22 Stats., 255.)

SEC. 1. Hereafter no Department or officer of the United States shall accept service for the Government or employ personal service in excess of that auth law, except in cases of sudden emergency involving the loss of human life or th tion of property. (Act of May 1, 1884, 23 Stats., 17.)

REVISED CIVIL-SERVICE RULES.

ADOPTING AND PROMULGATING ORDER.

In the exercise of power vested in him by the Constitution, and of authorit him by the seventeen hundred and fifty-third section of the Revised Statut an act to regulate and improve the civil-service of the United States, appro ary 16, 1883, the President hereby makes and promulgates the following revokes the rules known as "Amended Civil-Service Rules," and "Special 1," heretofore promulgated under the power and authority referred to her *vided*, That this revocation shall not be construed as an exclusion from the civil-service of any now classified customs district or classified post-office.

GENERAL RULES.

GENERAL RULE I.

Any officer in the executive civil-service who shall use his official autho fluence for the purpose of interfering with an election or controlling the resul or who shall dismiss, or cause to be dismissed, or use influence of any kind t

the dismissal of, any person from any place in the said service, because such person has refused to be coerced in his political action, or has refused to contribute money for political purposes, or has refused to render political service; and any officer, clerk, or other employé in the executive civil-service, who shall wilfully violate any of these rules, or any of the provisions of sections 11, 12, 13, and 14 of the act entitled "An act to regulate and improve the civil-service of the United States," approved January 16, 1883, shall be dismissed from office.

GENERAL RULE II.

There shall be four branches of the classified civil-service, as follows:

1. The classified departmental service.
2. The classified customs service.
3. The classified postal service.
4. The classified railway mail service.

GENERAL RULE III.

1. No person shall be appointed or employed to enter the civil-service, classified in accordance with section 163 of the Revised Statutes, and under the act to regulate and improve the civil-service of the United States, approved January 16, 1883, until he shall have passed an examination, or shall have been shown to be specially exempted therefrom by said act, or by an exception to this rule set forth in connection with the rules regulating admission to the branch of the service he seeks to enter.

2. No non-competitive examination shall be held except under the following conditions:

(a) The failure of competent persons to be, after due notice, competitively examined, thus making it impracticable to supply to the appointing officer in due time the names of persons who have passed a competitive examination.

(b) That a person has been, during one year or longer, in a place excepted from examination, and the appointing or nominating officer desires the appointment of such person to a place not excepted.

(c) That a person has served two years continuously since July 16, 1883, in a place in the departmental service below, or outside, the classified service, and the appointing officer desires, with the approval of the President, upon the recommendation of the commission, to promote such person into the classified service because of his faithfulness and efficiency in the position occupied by him, and because of his qualifications for the place to which the appointing officer desires his promotion.

(d) That an appointing or nominating officer desires the examination of a person to test his fitness for a classified place which might be filled under exceptions to examination declared in connection with the rules regulating admission to the classified service.

(e) That the commission, with the approval of the President, has decided that such an examination should be held to test fitness for any particular place requiring technical, professional, or scientific knowledge, special skill, or peculiar ability, to test fitness for which place a competitive examination can not, in the opinion of the commission, be properly provided. But no person appointed to such a place upon non-competitive examination shall, within one year after appointment, be transferred or appointed to any place not excepted from examination; but after having served in such non-competitive place not less than one year, he may be transferred or appointed in the bureau or office in which he is serving to a place not excepted from examination upon the certificate of the commission or the proper board of examiners that he has passed an examination to test fitness for the place to which his transfer or appointment is proposed.

(f) That a person who has been appointed from the copyist register wishes to take the clerk examination for promotion to a place the salary of which is not less than $1,000 per annum.

(*g*) To test the fitness of a person for a place to which his transfer has been requested.

(*h*) When the exigencies of the service require such examination for promotion as provided by clause 6 of this rule, or for temporary appointment for not exceeding three days, in any part of the classified service.

3. All applications for examination must be made in form and manner prescribed by the commission.

4. No person serving in the Army or Navy shall be examined for admission to the classified service until the written consent of the head of the department under which he is enlisted shall have been communicated to the commission.

No person who is an applicant for examination, or who is an eligible in one branch of the classified service shall, at the same time, be an applicant for examination in any other branch of said service.

5. The commission may refuse to examine an applicant who would be physically unable to perform the duties of the place to which he desires appointment. The reason for any such action must be entered on the minutes of the commission.

6. For the purpose of establishing in the classified civil-service the principle of competitive examination for promotion, there shall be, so far as practicable and useful, compulsory competitive examinations of a suitable character to test fitness for promotion; but persons in the classified service who were honorably discharged from the military or naval service of the United States, and the widows and orphans of deceased soldiers and sailors, shall be exempt from such examinations.

The commission may make regulations, applying them to any part of the classified service, under which regulations all examinations for promotion therein shall be conducted and all promotions be made; but until regulations in accordance herewith have been applied to any part of the classified service, promotions therein shall be made in the manner provided by the rules applicable thereto. And in any part of the classified service in which promotions are made under examination as herein provided, the commission may, in special cases, if the exigencies of the service require such action, provide non-competitive examinations for promotion.

Persons who were in the classified civil-service on July 16, 1883, and persons who have been, since that date, or may be hereafter put into that service by the inclusion of subordinate places, clerks, and officers, under the provisions of section 6 of the act to regulate and improve the civil-service of the United States, approved January 16, 1883, shall be entitled to all rights of promotion possessed by persons of the same class or grade appointed after examination under the act referred to above.

7. No question in any examination shall be so framed as to elicit information concerning the political or religious opinions or affiliations of competitors; and no discrimination in examination, certification, or appointment shall be made by the commissioners, the examiners, or the appointing or nominating officer in favor of or against any applicant, competitor, or eligible because of his political or religious opinions or affiliations. The commission, the examiners, and the appointing or nominating officer shall disountenance all disclosures of such opinions or affiliations by or concerning any applicant, competitor, or eligible; and any appointing or nominating officer who shall make inquiries concerning, or in any other way attempt to ascertain, the political or religious opinions or affiliations of any eligible, or who shall discriminate in favor of or against any eligible because of the eligible's political or religious opinions or affiliations, shall be dismissed from office.

8. Every applicant must state under oath—

(*a*) His full name.

(*b*) That he is a citizen of the United States.

(*c*) Year and place of his birth.

(*d*) The state, territory, or district of which he is a *bona fide* resident, and the length of time he has been a resident thereof.

(*e*) His postoffice address.

(*f*) His business or employment during the three years immediately preceding the date of his application, and where he has resided each of those years.

(*g*) Condition of his health, and his physical capacity for the public service.

(*h*) His previous employment in the public service.

(*i*) Any right of preference in civil appointments he may claim under section 1754 of the Revised Statutes.

(*j*) The kind of school in which he received his education.

(*k*) That he does not habitually use intoxicating beverages to excess.

(*l*) That he has not, within the one year next preceding the date of his application, been dismissed from the public service for delinquency or misconduct.

(*m*) Such other facts as the commission may require.

9. Every applicant for examination for the classified departmental service and the classified railway mail service must support the statements of his application paper by certificates of persons acquainted with him, residents of the state, territory, or district in which he claims *bona fide* residence; and the commission shall prescribe the form and number of such certificates.

10. A false statement made by an applicant, or procured by his connivance, or any deception or fraud practiced by an applicant, or by any person on his behalf with his consent, shall be good cause for refusal to examine such applicant, or to mark his papers after examination, or to certify him for appointment or for his removal after appointment.

11. All examinations shall be prepared and conducted under the supervision of the commission; and examination papers shall be marked under rules made by the commission, which shall take care that the marking-examiners do not know the name of any competitor in an examination for admission whose papers are intrusted to them.

12. For the purpose of marking examination papers, boards of examiners shall be appointed by the commission; one to be known as the central board, which shall be composed of persons in the classified service, who shall be detailed for constant duty at the office of the commission. Under supervision of the commission, the central board shall mark the papers of the copyist and of the clerk examinations, and such of the papers of the supplementary, special, and promotion examinations for the departmental service, and of examinations for admission to, or promotion in, the other branches of the classified service, as shall be submitted to it by the commission.

13. No person shall be appointed to membership on any board of examiners until after the commission shall have consulted with the head of the department or of the office under whom such person is serving.

14. An examiner shall be allowed time during office-hours to perform his duties as examiner, which duties shall be considered part of his official duties.

15. The commission may change the membership of boards of examiners and—

(*a*) Prescribe the manner of organizing such boards;

(*b*) More particularly define their powers;

(*c*) Specifically determine their duties, and the duties of the members thereof.

16. Each board shall keep such records, and make such reports, as the commission may require; and such records shall be open to the inspection of any member of this commission, or other person acting under authority of the commission, which may, for the purposes of investigation, take possession of such records.

GENERAL RULE IV.

1. The names of all competitors who shall successfully pass an examination shall be entered upon a register, and the competitors whose names have been thus registered shall be eligible to any office or place to test fitness for which the examination was held.

2. The commission may refuse to certify an eligible who is so defective in sight, speech, or hearing, or who is otherwise so defective physically, as to be apparently unfit to perform the duties of the position to which he is seeking appointment; or an eligible who has been guilty of a crime or of infamous or notoriously disgraceful conduct.

3. If an appointing or nominating officer to whom certification has been mad object in writing to any eligible named in the certificate, stating that because of cal incapacity, or for other good cause particularly specified, such eligible is not of properly performing the duties of the vacant place, the commission may, u vestigation and ascertainment of the fact that the objection made is good a founded, direct the certification of another eligible in place of the one to whom ob has been made.

GENERAL RULE V.

Executive officers shall, in all proper ways, facilitate civil-service examinatio customs officers, postmasters, and custodians of public buildings, at places whe examinations are to be held, shall, for the purposes of such examinations, perr arrange for the use of suitable rooms under their charge, and for heating, lighti furnishing the same.

GENERAL RULE VI.

No person dismissed for misconduct, and no probationer who has failed to rec solute appointment or employment, shall be admitted to any examination wit year after having been thus discharged from the service.

GENERAL RULE VII.

1. Persons who have a *prima facie* claim of preference for appointments to civi under section 1754, Revised Statutes, shall be preferred in certifications made un authority of the commission to any appointing or nominating officer.

2. In making any reduction of force in any branch of the classified civil- those persons shall be retained who, being equally qualified, have been hon discharged from the military or naval service of the United States; and also the and orphans of deceased soldiers and sailors.

GENERAL RULE VIII.

The commission shall have authority to prescribe regulations under and in acc with these general rules and the rules relating specially to each of the several bi of the classified service.

DEPARTMENTAL RULES.

DEPARTMENTAL RULE I.

1. The classified departmental service shall include the several officers, cler other persons in any department, commission, or bureau at Washington classifie section 163 of the Revised Statutes or by direction of the President for the pur the examinations prescribed by the civil-service act of 1883 or for facilitating th ries as to fitness of candidates for admission to the departmental service in respect health, character, knowledge, and ability, as provided for in section 1753 of the Statutes.

2. The word "department," when used in the general or departmental rule be construed to mean any such department, commission, or bureau classified a prescribed.

DEPARTMENTAL RULE II.

1. To test the fitness of applicants for admission to the classified department ice there shall be examinations as follows:

Copyist examination. For places of $900 per annum, and under. This exam shall not include more than the following subjects:

(*a*) Orthography.

(*b*) Copying.

(*c*) Penmanship.

(*d*) Arithmetic: fundamental rules, fractions, and percentage.

Clerk examination. For places of $1,000 per annum, and upward. This examination shall not include more than the following subjects:

(*a*) Orthography.
(*b*) Copying.
(*c*) Penmanship.
(*d*) Arithmetic: fundamental rules, fractions, percentage, interest, and discount.
(*e*) Elements of book-keeping and of accounts.
(*f*) Elements of the English language.
(*g*) Letter-writing.
(*h*) Elements of the geography, history, and government of the United States.

Supplementary examinations. For places which, in the opinion of the commission, require, in addition to the knowledge required to pass the copyist or the clerk examination, certain technical, professional, or scientific knowledge, or knowledge of a language other than the English language, or peculiar or special skill.

Special examinations. For places which, in the opinion of the commission, require certain technical, professional, or scientific knowledge or skill. Each special examination shall embrace, in addition to the special subject upon which the applicant is to be tested, as many of the subjects of the clerk examination as the commission may decide to be necessary to test fitness for the place to be filled.

Non-competitive examinations. For any place in the departmental service for which the commission may, from time to time (subject to the conditions prescribed by General Rule III, clause 2), determine that such examinations ought to be held.

2. An applicant may take the copyist or the clerk examination, and any or all of the supplementary and special examinations provided for the departmental service, subject to such limitations as the commission may, by regulation, prescribe; but no person whose name is on a departmental register of eligibles shall, during the period of his eligibility, be allowed re-examination unless he shall satisfy the commission that, at the time of his examination, he was unable, because of illness or other good cause, to do himself justice in said examination; and the rating upon such re-examination shall cancel and be a substitute for the rating of such person upon the previous examination.

3. Exceptions from examination in the classified departmental service are hereby made as follows:

(*a*) One private secretary, or one confidential clerk, of the head of each classified department and of each assistant secretary thereof; and also of each head of bureau appointed by the President by and with the advice and consent of the Senate.
(*b*) Direct custodians of money for whose fidelity another officer is under official bond; but this exception shall not include any officer below the grade of assistant cashier or assistant teller.
(*c*) Disbursing officers who give bonds.
(*d*) Persons employed exclusively in the secret service of the Government.
(*e*) Chief clerks.
(*f*) Chiefs of divisions.

4. No person appointed to a place under the exceptions to examination hereby made shall, within one year after appointment, be transferred from such place to a place not also excepted from examination; but after service of not less than one year in an examination-excepted place he may be transferred in the bureau in which he is serving to a place not excepted from examination: *Provided*, That before any such transfer may be made the commission must certify that the person whom it is proposed to so transfer has passed an examination to test fitness for the place proposed to be filled by such transfer.

DEPARTMENTAL RULE III.

In compliance with the provisions of section 3 of the civil-service act, the commission shall provide examinations for the classified departmental service at least twice in

each year in every State or Territory in which there is a sufficient number of applicants for such examinations; and the places and times of examinations shall, when practicable, be so fixed that each applicant may know at the time of making his application when and where he may be examined. But applicants may be notified to appear at any place at which the commission may order an examination.

DEPARTMENTAL RULE IV.

1. Any person not under twenty years of age may make application for admission to the classified departmental service: *Provided*, That any person may apply for the position of printer's assistant in the Bureau of Engraving and Printing who is not under eighteen nor over thirty-five years of age; and blank forms for such application shall be furnished by the commission.

2. Every application for admission to the classified departmental service should be addressed as follows: "United States Civil-Service Commission, Washington, D. C."

3. The date of reception and also of approval by the commission of each application shall be noted on the application paper.

DEPARTMENTAL RULE V.

1. The papers of all examinations for admission to or promotion in the classified departmental service shall be marked as directed by the commission.

2. The commission shall have authority to appoint the following-named boards of examiners, which shall conduct examinations and mark examination papers as follows:

Central board. As provided for by General Rule III, clause 12.

Special boards.—These boards shall mark such papers of special examinations for the classified departmental service as the commission may direct, and shall be composed of persons in the public service.

Supplementary boards.—These boards shall mark the papers of such supplementary examinations for the classified departmental service as the commission may direct, and shall be composed of persons in the public service.

Promotion boards.—One for each Department, of three members, and one auxiliary member for each bureau of the Department for which the board is to act. Unless the commission shall otherwise direct, these boards shall mark the papers of promotion examinations.

Local boards.—These boards shall be organized at one or more places in each State and Territory where examinations for the classified departmental service or the classified railway mail service are to be held, and shall conduct such examinations; and each shall be composed of persons in the public service residing in the State or Territory in which the board is to act.

Customs, postal, and railway mail boards.—These boards shall conduct such examinations for the classified departmental service as the commission may direct.

DEPARTMENTAL RULE VI.

1. The papers of the copyist and of the clerk examinations shall be marked by the central board; the papers of special and supplementary examinations shall be marked as directed by the commission. Each competitor in any of the examinations mentioned or referred to above shall be graded on a scale of 100, according to the general average determined by the marks made by the examiners on his papers.

2. The papers of an examination having been marked, the commission shall ascertain—

(*a*) The name of every competitor who has, under section 1754 of the Revised Statutes, claim of preference in civil appointments, and who has attained a general average of not less than 65 per centum; and all such competitors are hereby declared eligible to the class or place to test fitness for which the examination was held.

(*b*) The name of every other competitor who has attained a general average of not less than 70 per centum; and all such competitors are hereby declared eligible to the class or place to test fitness for which the examination was held.

3. The names of all preference-claiming competitors whose general average is not less than 65 per centum, together with the names of all other competitors whose general average is not less than 70 per centum, shall be entered upon the register of persons eligible to the class or place to test fitness for which the examination was held.

4. To facilitate the maintenance of the apportionment of appointments among the several States and Territories and the District of Columbia, required by section 2 of the act to regulate and improve the civil service of the United States, approved January 16, 1883, there shall be lists of eligibles for each State and Territory, and for the District of Columbia, upon which shall be entered the names of the competitors from that State or Territory, or the District of Columbia, who have passed the copyist and the clerk examinations; the names of those who have passed the copyist examination and of those who have passed the clerk examination being listed separately; the names of male and of female eligibles in such examinations being also listed separately.

5. But the names of all competitors who have passed a supplementary or a special examination, or an examination for printer's assistant in the Bureau of Engraving and Printing, shall be entered without regard to State residence upon the register of persons eligible to the class or place to test fitness for which the examination was held.

6. The grade of each competitor shall be expressed by the whole number nearest the general avera e attained by him, and the grade of each eligible shall be noted upon the register of eligibles in connection with his name. When two or more eligibles are of the same grade, preference in certification shall be determined by the order in which their application papers were filed.

7. Immediately after the general averages in an examination shall have been ascertained each competitor shall be notified that he has passed or has failed to pass.

8. If a competitor fail to pass, he may, with the consent of the commission, be allowed re-examination at any time within six months from the date of failure without filing a new application. But a competitor failing to pass, desiring to take again the same examination, must, if not allowed re-examination within six months from the date of failure, make, in due form, a new application therefor.

9. No person who has passed an examination shall, while eligible on the register supplied by such examination, be re examined, unless he shall furnish evidence satisfactory to the commission that at the time of his examination he was, because of illness or other good cause, incapable of doing himself justice in said examination.

10. The term of eligibility to appointment under the copyist and the clerk examinations shall be one year from the day on which the name of the eligible is entered on the register. The term of eligibility under a supplementary or a special examination shall be determined by the commission, but shall not be less than one year.

DEPARTMENTAL RULE VII.

1. Vacancies in the classified departmental service, unless among the places excepted from examination, if not filled by either promotion or transfer, shall be filled in the following manner: *Provided*, That no certification shall be made from the clerk or any supplementary register to any Department to which promotion regulations have been applied under General Rule III, section 6, to fill a vacancy above the grade of class one.

(*a*) The appointing officer shall, in form and manner to be prescribed by the commission, request the certification to him of the names of either males or females eligible to a certain place then vacant.

(*b*) If fitness for the place to be filled is tested by competitive examination, the commission shall certify the names of three males or three females, these names to be those of the eligibles who, standing higher in grade than any other three eligibles of the same

sex on the list of eligibles from which certification is to be made, have not been certified three times to the officer making the requisition: *Provided*, That if upon any register from which certification is to be made there are the names of eligibles who have, under section 1754 of the Revised Statutes, claim of preference in civil appointments, the names of such eligibles shall be certified before the names of other eligibles higher in grade. The commission shall make regulations that will secure to each of such preference-claiming eligibles, in the order of his grade among other preference-claimants, an opportunity to have his claim of preference considered and determined by the appointing officer.

2. Certifications hereunder shall be made in such manner as to maintain, as nearly as possible, the apportionment of appointments among the several States and the Territories and the District of Columbia, as required by law.

3. If the three names certified are those of persons eligible on the copyist or the clerk register, the appointing officer shall select one, and one only, and shall notify the person whose name has been selected that he has been designated for appointment: *Provided*, That, for the purpose of maintaing the apportionment of appointments referred to in clause 2 of this rule, the commission may authorize the appointing officer to select more than one of the three names certified.

When certification is made from a supplementary or special register, or the printer's assistant register, and there are more vacancies than one to be filled, the appointing officer may select from the three names certified more than one.

4. The commission may certify from the clerk register, for appointment to a place the salary of which is less than $1,000 per annum, any eligible on said register who has given written notice that he will accept such a place.

5. When a person designated for appointment shall have reported in person to the appointing officer, he shall be appointed for a probational period of six months, at the end of which period, if his conduct and capacity be satisfactory to the appointing officer, he shall receive absolute appointment; but if his conduct and capacity be not satisfactory to said officer he shall be notified that he will not receive absolute appointment, and this notification shall discharge him from the service. The appointing officer shall require the heads of bureaus or divisions under whom probationers are serving to keep a record and to make report of the punctuality, industry, habits, ability, and aptitude of each probationer.

6. All persons appointed to or promoted in the classified departmental service shall be assigned to the duties of the class or place to which they have been appointed or promoted, unless the interests of the service require their assignment to other duties; and when such assignment is made the fact shall be reported to the head of the department.

7. In cases of temporary absence, from sickness or other unavoidable cause, of clerks, copyists, or employés of other grades for which examinations are held, there may be certified, in the manner provided for in this rule, and employed under such regulations as the heads of the several departments shall prescribe, substitutes for such clerks, copyists, or other employés so absent, and such substitutes so employed in any department shall be appointed, in the order of their employment as substitutes, to the regular grades of that department without further certification as vacancies to which they are eligible may occur therein while so employed as substitutes; every such appointment to be at once reported to the Commission: *Provided*, That no person while employed as a substitute in one department shall be certified as a substitute to any other department; and that no person employed as a substitute shall by reason of such employment be deprived of any right of certification for a regular place to which he may be entitled under the rules: *And provided further*, That service rendered as substitute shall not be ground for reinstatement under Departmental Rule X. The time during which any substitute, who shall be appointed to a regular place, is actually employed as such shall be counted as part of his period of probation. No substitute shall be employed in any department otherwise than as herein provided.

DEPARTMENTAL RULE VIII.

1. Transfers may be made as follows:

(a) From one department to another, upon requisition by the head of the department to which the transfer is to be made.

(b) From a bureau of the Treasury Department in which business relating to the customs is transacted to a classified customs district, and from such a district to such a bureau of the Treasury Department, upon requisition by the Secretary of the Treasury.

(c) From the Post-Office Department to a classified post-office, or to the classified railway mail service, and from a classified post-office, or the classified railway mail service, to the Post-Office Department, upon requisition by the Postmaster-General.

(d) From the office of the President of the United States, after two years continuous service therein immediately preceding the transfer, to any place in the classified service, without examination, upon the requisition of the head of the department to which the transfer is to be made and the certification of the commission.

(2) No person may be transferred as herein authorized, except as provided in section 1, clause (d), until the commission shall have certified to the officer making the transfer requisition that the person whom it is proposed to transfer has passed an examination to test fitness for the place to which he is to be transferred, and that such person has, during at least six months preceding the date of the certificate, been in the classified railway mail service or in the classified service of the department, customs district, or post-office from which the transfer is to be made: *Provided*, That no person has been appointed from the copyist register shall be transferred to a place the salary of which is more than $900 per annum until one year after appointment.

DEPARTMENTAL RULE IX.

1. A person appointed from the copyist register may, upon any test of fitness determined upon by the promoting officer, be promoted as follows:

(a) At any time after probational appointment to any place the salary of which is not more than $900 per annum.

(b) At any time after one year from the date of probational appointment, upon certification by the commission that he has passed the clerk examination, or its equivalent, to any place the salary of which is $1,000 per annum, or more.

(c) At any time after two years from the date of probational appointment to any place the salary of which is $1,000 per annum, or more.

2. A person appointed from the clerk register, or from any supplementary or special register, to a place the salary of which is $1,000 per annum, or more, may, upon any test of fitness determined upon by the promoting officer, be promoted at any time after absolute appointment.

3. A person appointed from the clerk register, or from any supplementary or special register, to a place the salary of which is $900, or less, may, upon any test of fitness determined upon by the promoting officer, be promoted, at any time after probational appointment, to any place the salary of which is $1,000 per annum.

4. Other promotions may be made upon any tests of fitness determined upon by the promoting officer.

5. The provisions of clauses 1, 2, 3, and 4 of this rule shall become null and void in any part of the classified departmental service as soon as promotion regulations shall have been applied thereto under General Rule III, clause 6.

DEPARTMENTAL RULE X.

Upon requisition of the head of a department, the commission shall certify for reinstatement in said department, in a grade requiring no higher examination than the one in which he was formerly employed, any person who, within one year next preceding the date of the requisition, has, through no delinquency or misconduct, been separated from the classified service of that department: *Provided*, That certification may be made, subject to the other conditions of this rule, for the reinstatement of any person

who served in the military or naval service of the United States, in the late war of rebellion, and was honorably discharged therefrom, without regard to the length time he has been separated from the service.

DEPARTMENTAL RULE XI.

Each appointing officer in the classified departmental service shall report to the C mission—

(*a*) Every probational and every absolute appointment made by him, and every pointment made by him under any exception to examination authorized by Dep mental Rule II, clause 3.

(*b*) Every refusal by him to make an absolute appointment, and every refusa neglect to accept an appointment in the classified service under him.

(*c*) Every transfer within and into the classified service under him.

(*d*) Every assignment of a person to the performance of the duties of a class or p to which such person was not appointed.

(*e*) Every separation from the classified service under him, and whether the sep tion was caused by dismissal, resignation, or death. Places excepted from exam tion are within the classified service.

(*f*) Every restoration to the classified service under him of any person who have been separated therefrom by dismissal or resignation.

SPECIAL DEPARTMENTAL RULES.

RULE NO. 1.

In addition to the exceptions from examination made by Departmental Rule clause 3, the following exceptions to examinations for the classified departme service are hereby made, viz:

1. In the Department of State: Lithographer.
2. In the Department of the Treasury:

In the office of the Secretary: Government actuary, inspector of furniture, todian of dies, rolls, and plates at the Bureau of Engraving and Printing, subcustodians, keeper of the vault and distributor of stock, foremen of borers, skilled laborers, elevator conductors, foreman of cabinet-shop cabinet-makers.

In the office of the Comptroller of the Currency: Bond clerk.

In the office of the Supervising Architect: Supervising Architect, assistant pervising architect, confidential clerk to Supervising Architect, and pho rapher, engineers and draughtsmen of classes 1, 2, 3, 4, and 5, not exceed ten in all: *Provided*, That these ten places shall cease to be excepted pl from and after June 30, 1890.

In the Bureau of the Mint: Assayer, examiner, computer of bullion, and juster of accounts.

In the Bureau of Navigation: Clerk of class 4, acting as deputy commissi

In the Office of Construction of Standard Weights and Measures: Adjuster mechanician.

In the Bureau of Engraving and Printing: Chief of the bureau, assistant of bureau, engravers and plate-printers, plate-cleaners, transferers, har ers, provers, pressmen, machinists, plumbers, carpenters, and blacksm

In the Coast and Geodetic Survey: Superintendent, confidential clerk to Su intendent, the normal or field force, general office assistant, confidential c to assistant in charge of office and topography, engravers and contrac gravers, electrotypist and photographer, electrotypist's helper, apprenti electrotypist and photographer, copper-plate printers, plate-printers' hel and mechanicians.

In the office of the Commissioner of Internal Revenue: Superintendent of st vault.

In the Life-Saving Service: Topographer and hydrographer.

3. In the Department of the Interior:
   In the office of the Secretary: Superintendent of documents, clerk of class 3 as custodian, clerk to sign land patents, and telephone operator.
   In the office of the Assistant Attorney-General: Law clerks, one at $2,750 per annum, one at $2,500 per annum, one at $2,250 per annum, and thirteen at $2,000 per annum.
   In the Patent Office: Financial clerk, examiner of interferences, and law clerk.
   In the General Land Office: Two law clerks, two law examiners, clerk of class 4 acting as receiving clerk, and ten principal examiners of land claims and contests.
   In the Bureau of Pensions: Assistant chief clerk, medical referee, assistant medical referee, and law clerk.
   In the Bureau of Indian Affairs: Principal book-keeper.
   In the office of the Commissioner of Railroads: Railroad engineer.
   In the Bureau of Education: Collector and compiler of statistics and statistician.
   In the Geological Survey: General assistant, executive officer, chief photographer, editor, all scientific employés of the Geological Survey officially designated as follows: Chief geologist, geologist, assistant geologist, chief paleontologist, paleontologist, assistant paleontologist, chief chemist, chemist, assistant chemist, chief physicist, physicist, assistant physicist, chief geographer, geographer, assistant geographer, chief topographer, topographer, assistant topographer, chief hydrographer, hydrographer, assistant hydrographer, supervising engineer, engineer, assistant engineer, paleontological draughtsman, chief mechanician, mechanician, assistant mechanician.
4. In the Department of War:
   Clerk for the General of the Army, and clerk for the retired General of the Army.
   In the office of the Chief Signal Officer: Lithographer.
5. In the Department of the Navy:
   In the Hydrographic Office: Engravers, copper-plate printers, printers' apprentices.
6. In the Department of Justice:
   Assistant attorneys, pardon clerk, and two law clerks.
7. In the Department of Agriculture:
   In the office of the Secretary: Private secretary to the chief clerk, superintendent of grounds, and assistant chief of each of the following divisions: Of botany, of chemistry, of entomology, of forestry, and of statistics, and the director of experiment stations, the assistant director, and the private secretary to the director.
   In the Bureau of Animal Industry: Chief of the Bureau, assistant chief, private secretary to chief, and chief clerk.
   Scientific or professional experts to be employed in investigations specially authorized by Congress, but not to include any persons regularly employed in that department, nor any persons whose duties are not scientific or professional, and who are not experts in the particular line of scientific or professional inquiry in which they are to be employed.
8. In the Post-Office Department:
   Assistant Attorney-General, law clerk, and agents and employés at postal-note, postage-stamp, postal-card, and envelope agencies.
9. In the Department of Labor:
   Statistical experts and temporary experts.
10. In all the Departments:
    Book-binders.

RULE NO. 2.

(Revoked March 28, 1890.)

No substitute shall hereafter be employed in any Department; and the head of any Department in which substitutes are now employed may appoint any of such substitutes to the place of his principal, or to any place of lower grade; provided that no substitute shall be appointed as herein authorized until he shall have passed an appropriate examination by the Civil Service Commission, and his eligibility shall have been certified by said commission to the head of the Department in which he is employed.

CUSTOMS RULES.

CUSTOMS RULE I.

1. The classified customs service shall include the officers, clerks, and other persons in the several customs districts classified under the provisions of section 6 of the act to regulate and improve the civil service of the United States, approved January 16, 1883.

2. When the officers, clerks, and other persons in any customs district number as many as fifty any existing classification of the customs service made by the Secretary of the Treasury under section 6 of the act of January 16, 1883, shall apply thereto; and thereafter the commission shall provide examinations to test the fitness of persons to fill vacancies in said customs district; and these rules shall be in force therein. Every revision of the classification of any customs office, under section 6 of the act above mentioned, and every inclusion within the classified customs service of a customs district, shall be reported to the President.

CUSTOMS RULE II.

1. To test fitness for admission to the classified customs service examinations shall be provided as follows:

*Clerk examination.**—This examination shall not include more than the following subjects:

(*a*) Orthography.
(*b*) Copying.
(*c*) Penmanship.
(*d*) Arithmetic: Fundamental rules, fractions, percentage, interest, and discounts.
(*e*) Elements of book-keeping and of accounts.
(*f*) Elements of English language.
(*g*) Letter-writing.
(*h*) Elements of geography, history, and government of the United States.

Law clerk examination.—This examination shall not include more than the following subjects:

(*a*) Orthography.
(*b*) Copying.
(*c*) Penmanship.
(*d*) Arithmetic: Fundamental rules, fractions, percentages, interest, and discount.
(*e*) Elements of the English language.
(*f*) Letter-writing.
(*g*) Law questions.

Day inspector examination.—This examination shall not include more than the following subjects:

(*a*) Orthography.
(*b*) Copying.
(*c*) Penmanship.
(*d*) Arithmetic: Fundamental rules, fractions, and percentage.
(*e*) Elements of the English language.
(*f*) Geography of America and Europe.

* Store-keepers shall be classed as clerks, and vacancies in that class shall be filled by assignment.

Inspectress examination.—This examination shall not include more than the following subjects:

(*a*) Orthography.
(*b*) Copying.
(*c*) Penmanship.
(*d*) Arithmetic: Fundamental rules.
(*e*) Geography of America and Europe.

Night inspector, messenger, assistant weigher, and *opener-and-packer examination.*—This examination shall not include more than the following subjects:

(*a*) Orthography.
(*b*) Copying.
(*c*) Penmanship.
(*d*) Arithmetic: Fundamental rules.

Gauger examination.—This examination shall not include more than the following subjects:

(*a*) Orthography.
(*b*) Copying.
(*c*) Penmanship.
(*d*) Arithmetic: Practical questions.
(*e*) Theoretical questions.
(*f*) Practical tests.

Examiner examination.—This examination shall not include more than the following subjects:

(*a*) Orthography.
(*b*) Copying.
(*c*) Penmanship.
(*d*) Arithmetic: Fundamental rules, fractions, percentage, and discount.
(*e*) Elements of the English language.
(*f*) Practical questions.
(*g*) Practical tests.

Sampler examination.—This examination shall not include more than the following subjects:

(*a*) Orthography.
(*b*) Copying.
(*c*) Penmanship.
(*d*) Arithmetic: Fundamental rules.
(*e*) Practical questions.
(*f*) Practical tests.

Other competitive examinations.—Such other competitive examinations as the commission may from time to time determine to be necessary in testing fitness for other places in the classified customs service.

Non-competitive examinations.—Such examinations may, with the approval of the commission, be held under conditions stated in General Rule III, clause 2.

2. Any person not under twenty-one years of age may be examined for any place in the customs service, to test fitness for which an examination is prescribed; and any person not under twenty years of age may be examined for clerk or messenger.

3. A person desiring examination for admission to the classified customs service must make request, in his own handwriting, for a blank form of application, which request, and also his application, shall be addressed as directed by the commission.

4. The date of reception and also of approval by the board of each of such applications shall be noted on the application paper.

5. Exceptions from examination in the classified customs service are hereby made as follows:

(*a*) Deputy collectors, who do not also act as inspectors, examiners, or clerks.
(*b*) Cashier of the collector.
(*c*) Assistant cashier of the collector.

CUSTOMS RULE VI.

1. Transfers may be made as follows:

(*a*) From one office of a classified district to another office in the same district, subject to the provisions of Customs Rule V.

(*b*) From one classified district to another, upon requisition by the Secretary of the Treasury.

(*c*) From any bureau of the Treasury Department in which business relating to customs is transacted to any classified customs district, and from any such district to any such bureau, upon requisition by the Secretary of the Treasury.

2 No person may be transferred, as herein authorized, until the board of examiners acting under (*a*) of clause 1, or until the commission, acting under (*b*) or (*c*) of clause 1 of this rule, shall have certified to the officer making the transfer requisition that the person whom it is proposed to transfer has passed an examination to test fitness for the place to which he is to be transferred, and that such person has been at least six months preceding the date of the certificate in the classified service of the department or customs district from which the transfer is to be made.

CUSTOMS RULE VII.

Upon requisition of a nominating officer in any customs district the board of examiners thereof shall certify for reinstatement in any office under his jurisdiction, in a grade requiring no higher examination than the one in which he was formerly employed, any person who, within one year next preceding the date of the requisition has, through no delinquency or misconduct, been separated from the classified service of said office: *Provided*, That certification may be made, subject to the other conditions of this rule, for the reinstatement of any person who served in the military or naval service of the United States, in the late war of the rebellion, and was honorably discharged therefrom, without regard to the length of time he has been separated from the service.

CUSTOMS RULE VIII.

Each nominating officer of a classified customs district shall report to the board of examiners—

(*a*) Every probational and absolute appointment, and every appointment under an exception to examination authorized by Customs Rule II, clause 5, made within his jurisdiction.

(*b*) Every refusal by him to nominate a probationer for absolute appointment, and every refusal or neglect to accept an appointment in the classified service under him.

(*c*) Every transfer into the classified service under him.

(*d*) Every separation from the classified service under him, and whether the separation was caused by dismissal, resignation, or death. Places excepted from examination are within the classified service.

(*e*) Every restoration to the classified service under him of any person who may have been separated therefrom by dismissal or resignation.

SPECIAL CUSTOMS RULE.

RULE NO. 1.

In addition to exceptions from examination in the classified customs service, made under Customs Rule No. 2, clause 5, the following special exceptions are made:

In the Boston customs district: Office of the naval officer: Assistant deputy naval officer.

At the port of New York: Office of the collector: Book-binder, and detectives employed exclusively as such.

Office of the general appraiser: Chief clerk and law clerk.

9. The term of eligibility to appointment in the classified customs service shall be one year from the day on which the name of the eligible is entered on the register.

CUSTOMS RULE IV.

1. Vacancies in the lowest class or grade of the classified service of a customs district shall be filled in the following manner:

(*a*) The nominating officer, in any office in which a vacancy may exist, shall, in form and manner to be prescribed by the commission, request the board of examiners to certify to him the names of either males or females eligible to the vacant place.

(*b*) If fitness for the place to be filled is tested by competitive examination, the board of examiners shall certify the names of three males or three females, these names to be those of the eligibles who, standing higher in grade than any other three eligibles of the same sex on the register from which certification is to be made, have not been certified three times from said register: *Provided*, That if upon said register there are the names of eligibles who, under section 1754 of the Revised Statutes, have claim of preference in civil appointments, the names of such eligibles shall be certified before the names of other eligibles higher in grade. The commission shall make regulations that will secure to each of such preference-claiming eligibles, in the order of his grade among other preference claimants, an opportunity to have his claim of preference considered and determined by the appointing officer.

(*c*) Each name on a register of eligibles may be certified only three times: *Provided*, That when a name has been three times certified, if there are not three names on the register of higher grade, it may, upon the written request of a nominating officer to whom it has not been certified, be included in any certification made to said officer.

2. Of the three names certified the nominating officer must select one; and, if at the time of making this selection there are more vacancies than one, he may select more than one name. Each person thus designated for appointment shall be notified, and upon reporting in person to the proper officer shall be appointed for a probational period of six months, at the end of which period, if his conduct and capacity be satisfactory to the nominating officer, he shall receive absolute appointment; but if his conduct and capacity be not satisfactory to said officer, he shall be notified that he will not receive absolute appointment, and this notification shall discharge him from the service.

3. Every nominating officer in the classified customs service shall require the officer under whom a probationer may be serving to carefully observe and report in writing the services rendered by and the character and qualifications of such probationer. These reports shall be preserved on file, and the commission may prescribe the form and manner in which they shall be made.

4. All other vacancies, unless among the places excepted from examination, shall be filled by transfer or promotion.

CUSTOMS RULE V.

1. Until promotion regulations have been applied to a classified customs district the following promotions may be made therein at any time after absolute appointment:

(*a*) A clerk, upon any test of fitness determined upon by the nominating officer, to any vacant place in the class next above the one in which he may be serving.

(*b*) A day inspector, upon any test of fitness determined upon by the nominating officer, to class 2 in the grade of clerk.

(*c*) A clerk, day inspector, opener-and-packer, or sampler, after passing the examiner examination, to the grade of examiner.

(*d*) A messenger, after passing the clerk examination, to the lowest class in the grade of clerk.

(*e*) A night inspector, after passing the day-inspector examination, to the grade of day inspector.

2. Other promotions may be made, in the discretion of the promoting officer, upon any test of fitness determined upon by *him*.

for the position of carrier if under twenty-one or over forty years of age. No person shall be examined for any other position in the classified postal service if under eighteen or over forty-five years of age.

3. Any person desiring examination for admission to the classified postal service must make request, in his own handwriting, for a blank form of application, which request, and also his application, shall be addressed as directed by the commission.

4. The date of reception and also of approval by the board of each of such applications shall be noted on the application paper.

5. Exceptions from examinations in the classified postal service are hereby made as follows:

(*a*) Assistant postmaster.

(*b*) One private secretary, or one confidential clerk of the postmaster.

(*c*) Cashier.

(*d*) Assistant cashier.

(*e*) Superintendents designated by the Post-Office Department, and reported as such to the commission: *Provided*, That superintendents of mails shall be selected from among the employés of the Railway Mail Service.

(*f*) Custodians of money, stamps, stamped envelopes, or postal-cards, designated as such by the Post-Office Department, and so reported to the commission, for whose fidelity the postmaster is under official bond.

6. No person appointed to a place under any exception to examination hereby made shall, within one year after appointment, be transferred to another place not also excepted from examination; but a person who has served not less than one year in an examination-excepted place may be transferred in the post-office in which he is serving to a place not excepted from examination: *Provided*, That before any such transfer may be made the commission must certify that the person whom it is proposed to so transfer has passed an examination to test fitness for the place proposed to be filled by such transfer.

POSTAL RULE III.

1. The papers of every examination shall be marked under the direction of the commission, and each competitor shall be graded on a scale of 100, according to the general average determined by marks made by the examiners on his papers.

2. The commission shall appoint in each classified post-office a board of examiners, which shall—

(*a*) Conduct all examinations held to test fitness for entrance to or promotion in the classified service of the post-office in which the board is located.

(*b*) Mark the papers of such examinations, unless otherwise directed, as provided for by General Rule III, clause 12.

(*c*) Conduct such examinations for the classified departmental service as the commission may direct.

3. The papers of an examination having been marked, the board of examiners shall ascertain—

(*a*) The name of every competitor who has, under section 1754 of the revised Statutes, claim of preference in civil appointments, and who has attained a general average of not less than 65 per cent.; and all such competitors are hereby declared eligible to the class or place to test fitness for which the examination was held.

(*b*) The name of every other competitor who has attained a general average of not less than 70 per cent.; and all such applicants are hereby declared eligible to the class or place to test fitness for which the examination was held.

4. The names of all preference-claiming competitors whose general average is not less than 65 per cent., together with the names of all other competitors whose general average is not less than 70 per cent., shall be entered upon the register of persons eligible to the class or place to test fitness for which the examination was held. The names of male and of female eligibles shall be listed separately.

5. The grade of each competitor shall be expressed by the whole number nearest the general average attained by him, and the grade of each eligible shall be noted upon the register of eligibles in connection with his name. When two or more eligibles are of the *same grade*, preference in certification shall be determined by the order in which their *application papers* were filed.

6. Immediately after the general averages shall have been ascertained each competitor shall be notified that he has passed or has failed to pass.

7. If a competitor fail to pass, he may, with the consent of the board, approved by the commission, be allowed re-examination at any time within six months from the date of failure, without filing a new application. But a competitor failing to pass, desiring to take again the same examination, must, if not allowed re examination within six months from the date of failure, make, in due form, a new application therefor.

8. No person who has passed an examination shall, while eligible on the register supplied by such examination, be re examined, unless he shall furnish evidence satisfactory to the commission that at the time of his examination he was, because of illness or for other good cause, incapable of doing himself justice in said examination.

9. The term of eligibility to appointment in the classified postal service shall be one year from the day on which the name of the eligible is entered on the register.

Postal Rule IV.

1. Vacancies in the classified service of a post-office, unless among the places excepted from examination, if not filled by either transfer or promotion, shall be filled in the following manner:

(*a*) The postmaster at a post-office in which a vacancy may exist shall, in form and manner to be prescribed by the commission, request the board of examiners to certify to him the names of either males or females, eligible to the vacant place.

(*b*) If fitness for the place to be filled is tested by competitive examination, the board of examiners shall certify the names of three males or three females, these names to be those of the eligibles who, standing higher in grade than any other three eligibles of the same sex on the register from which certification is to be made, have not been certified three times from said register: *Provided*, That if upon said register there are the names of eligibles who, under section 1754 of the Revised Statutes, have claim of preference in civil appointments, the names of such eligibles shall be certified before the names of other eligibles higher in grade. The commission shall make regulations that will secure to each of such preference-claiming eligibles, in the order of his grade among other preference claimants, opportunity to have his claim of preference considered and determined by the appointing officer.

(*c*) Each name on any register of eligibles may be certified only three times.

2. Of the three names certified to him the postmaster must select one; and if, at the time of making this selection, there are more vacancies than one, he may select more than one name. Each person thus designated for appointment shall be notified, and upon reporting in person to the postmaster shall be appointed for a probational period of six months, at the end of which period, if his conduct and capacity be satisfactory to the postmaster, he shall receive absolute appointment; but if his conduct and capacity be not satisfactory to said officer he shall be notified that he will not receive absolute appointment, and this notification shall discharge him from the service.

3. The postmaster of each classified post-office shall require the superintendent of each division of his office to carefully observe and report in writing the services rendered by and the character and qualifications of each probationer serving under him. These reports shall be preserved on file, and the commission may prescribe the form and manner in which they shall be made.

Postal Rule V.

Until promotion regulations shall have been applied to a classified post-office, promotions therein may be made upon any test of fitness determined upon by the postmaster, if not disapproved by the commission: *Provided*, That no employé shall be promoted to any grade he could not enter by appointment under the minimum age limitation applied thereto by Postal Rule II, clause 2.

POSTAL RULE VI.

1. Transfers may be made as follows:

(*a*) From one classified post-office to another; from any classified post-offic classified railway mail service; and from the classified railway mail servic classified post-office, upon requisition of the Postmaster-General.

(*b*) From any classified post-office or from the classified railway mail servic Post-Office Department, and from the Post-Office Department to any classified po or to the classified railway mail service, upon requisition of the Postmaster-G

2. No person may be transferred, as herein authorized, until the commissic have certified to the officer making the transfer requisition that the person wh proposed to transfer has passed an examination to test fitness for the place to w is to be transferred, and that such person has been at least six months next pr the date of the certificate in the classified railway mail service or in the classifi ice of the Department or post-office from which the transfer is to be made.

POSTAL RULE VII.

Upon the requisition of a postmaster the board of examiners for his office sh tify for reinstatement, in a grade requiring no higher examination than the which he was formerly employed, any person who, within one year next pr the date of the requisition, has, through no delinquency or misconduct, bee rated from the classified service in said office: *Provided*, That certification made, subject to the other conditions of this rule, for the reinstatement of any who served in the military or naval service of the United States, in the late the rebellion, and was honorably discharged therefrom, without regard to the of time he has been separated from the service.

POSTAL RULE VIII.

Each postmaster in the classified postal service shall report to the board of exam

(*a*) Every probational and every absolute appointment, and every appoi under any exception to examination authorized by Postal Rule II, clause 5, n his office.

(*b*) Every refusal to make an absolute appointment in his office, and every or neglect to accept an appointment in the classified service under him.

(*c*) Every transfer into the classified service under him.

(*d*) Every separation from the classified service under him, and whether th ration was caused by dismissal, resignation, or death. Places excepted from nation are within the classified service.

(*e*) Every restoration to the classified service under him of any person wh have been separated therefrom by dismissal or resignation.

Approved February 2, 1888.

These rules shall take effect March 1, 1888.

CLASSIFIED POSTAL SERVICE.

SPECIAL POSTAL RULE NO. 1.

In additions to the exceptions from examination in the classified postal made by Postal Rule II, clause 5, the following exception to examination i service is hereby made:

Printers, employed as such: *Provided*, That before any person may be emp under this exception to examination, the Post-Office Department shall info commission of the authority given to employ printers at any post-office, and number authorized to be employed at such office.

RAILWAY MAIL RULES.

RAILWAY MAIL RULE I.

The classified railway mail service shall include all the officers, clerks, and persons in that service, classified under the provisions of section 6 of the act ulate and improve the civil service of the United States, approved January 16

RAILWAY MAIL RULE II.

1. To test fitness for admission to the classified railway mail service the following examinations shall be provided:

Clerk examination.—This examination shall include not more than the following subjects:

(*a*) Orthography.

(*b*) Copying.

(*c*) Penmanship.

(*d*) Arithmetic: Fundamental rules, fractions, and percentage.

(*e*) Letter-writing.

(*f*) The geography of the United States and especially of the State or railway mail division in which the applicant resides.

(*g*) The railway systems of the State or railway mail division in which the applicant resides.

(*h*) Reading addresses.

Other competitive examinations.—Such other competitive examinations as the commission may from time to time deem necessary.

Non-competitive examinations.—Such examinations may, with the approval of the commission, be held under conditions stated in General Rule III, clause 2.

2. No person shall be examined for the railway mail service if under eighteen or over thirty-five years of age, except that any person honorably discharged from the military or naval service of the United States by reason of disability resulting from wounds or sickness incurred in the line of duty, and whose claim of preference under section 1754 of the Revised Statutes has been allowed by the commission, may be examined without regard to his age.

3. Any person desiring examination for admission to the classified railway mail service must, in his own handwriting, make request for a blank form of application, which request and also his application shall be addressed as follows: "United States Civil Service Commission, Washington, D. C."

4. The date of reception and also of approval by the commission of each application shall be noted on the application paper.

5. Exceptions from examination in the classified railway mail service are hereby made as follows:

(*a*) General superintendent.

(*b*) Assistant general superintendent.

(*c*) Printers, employed as such.

(*d*) Clerks employed exclusively as porters in handling mail matter in bulk, in sacks, or pouches, and not otherwise.

(*e*) Clerks employed exclusively on steam-boats.

6. No person appointed to a place under any exception to examination hereby made shall, within one year after appointment, be transferred to another place not also excepted from examination; but after service of not less than one year in an examination-excepted place he may be transferred to a place not excepted from examination, upon the certificate of the commission that he has passed an examination to test fitness for the place to which his transfer is proposed.

RAILWAY MAIL RULE III.

1. The papers of every examination shall be marked under the direction of the commission, and each competitor shall be graded on a scale of 100, according to the general average determined by the marks made by the examiners on his papers.

2. The commission shall appoint in each railway mail division as many boards of examiners as it may deem necessary for the good of the service and the convenience of applicants: *Provided*, That there shall be at least one such board in each Territory and not less than two in each State, except that the number may be limited to one each in the States of Rhode Island and Delaware.

3. These boards shall conduct such examination for admission to and promotions in the classified railway mail service, and such examinations for the other branches of the classified service as the commission may direct. They shall also mark such examination papers as the commission may direct.

4. Unless otherwise directed by the commission the papers of examinations for admission to the classified railway mail service shall be marked by the central board.

5. The papers of an examination having been marked, the commission shall ascertain—

(*a*) The name of every competitor who has, under section 1754 of the Revised Statutes, claim of preference in civil appointments, and who has attained a general average of not less than 65 per cent.; and all such competitors are hereby declared eligible to the class or place to test fitness for which the examination was held.

(*b*) The name of every other competitor who has attained a general average of not less than 70 per cent. and all such applicants are hereby declared eligible to the class or place to test fitness for which the examination was held.

6. The names of all preference-claiming competitors whose general average is not less than 65 per cent., together with the names of all other competitors whose general average is not less than 70 per cent., shall be entered upon the register of persons eligible to the class or place to test fitness for which the examination was held.

7. The grade of each competitor shall be expressed by the whole number nearest the general average attained by him, and the grade of each eligible shall be noted upon the register of eligibles in connection with his name. When two or more eligibles are of the same grade, preference in certification shall be determined by the order in which their application papers were filed.

8. There shall be a register of eligibles for each State and Territory, and the names of all the eligibles of any State or Territory shall be entered upon the register for that State or Territory. The eligibles of the District of Columbia shall be entered, according to their election, upon the register of the State of Maryland or upon that of the State of Virginia.

9. Immediately after the general averages shall have been ascertained each competitor shall be notified that he has passed or has failed to pass.

10. If a competitor fail to pass, he may, with the consent of the commission, be allowed a re-examination at any time within six months from the date of failure without filing a new application; but if such re-examination be not allowed within that time he shall not be again examined without making in due form a new application.

11. No eligible shall be allowed re-examination during the term of his eligibility unless he shall furnish evidence satisfactory to the commission that at the time of his examination, because of illness or other good cause, he was incapable of doing himself justice in said examination.

12. The term of eligibility shall be such as the commission may by regulation determine, but shall not be less than one year from the day on which the name of the eligible is entered upon the register: *Provided*, That for public and sufficient reasons the commission shall have authority to extend the term of eligibility of the eligibles on the register of any State or Territory for such period, not exceeding one year, as it may deem necessary, without correspondingly extending the term of the eligibles on the registers of the other States and Territories as to which the same reasons do not exist.

RAILWAY MAIL RULE IV.

1. All vacancies in the classified railway mail service above class 1, unless among the places excepted from examination, shall be filled by promotion, upon such tests of fitness as the Postmaster-General, with the approval of the commission, may prescribe: *Provided*, That a vacancy occurring in a State or railway mail division in any grade may be filled by the transfer of a clerk of the same grade from another State or division, under such regulations as the Postmaster-General, with the approval of the commission, may prescribe, or by re-appointment under the provisions of Railway Mail Rule VI.

2. All vacancies in class 1, unless filled by transfer or re-appointment under *Railway Mail Rule VI, shall* be filled in the following manner:

(a) The General Superintendant shall, in form and manner to be prescribed by the

mmission, request the certification to him of eligibles from a State or Territory in hich a vacancy then exists.

(b) The commission shall certify from the register of the State or Territory in which the vacancy exists the names of the three eligibles thereon having the highest averages, resident in the counties of said State or Territory through or on the borders of which the section of the road passes on which the person to be appointed is to serve, who have not been three times certified: *Provided*, That if there are not three eligibles resident in said counties, then certification shall be made in like manner from the counties of said State or Territory nearest to the line of said road in which there are three eligibles, or if there are not three eligibles upon the register of said State or Territory, then certification may be made from the register of any adjoining State or Territory: *Provided, further*, That if upon the register of the State or Territory in which the vacancy exists there are the names of eligibles having a claim of preference under section 1754, Revised Statutes, the names of such eligibles shall be certified before the names of other eligibles of higher grade.

(c) The name of an eligible shall not be certified more than three times.

3. Of the three names certified to the General Superintendent one shall be selected and designated for appointment, and more than one may be if there be more than one vacancy existing at the time.

4. Each person designated for appointment shall be notified, and upon reporting to the proper officer shall be appointed for a probational period of six months, at the end of which period, if his conduct and capacity be satisfactory, he shall be absolutely appointed; but if his conduct and capacity be not satisfactory he shall be so notified, and such notice shall be his discharge from the service.

5. The General Superintendent, with the approval of the Postmaster-General, shall prescribe regulations under which each probationer shall be observed and tested and a record kept of his conduct and capacity, and such record shall determine his fitness for the service, and whether he shall be dropped during or at the end of probation or be absolutely appointed.

6. There may be certified and appointed in each State and Territory, in the manner provided for in this rule, such number of substitute clerks, not exceeding the ratio of one substitute to twenty regular clerks in such State or Territory as the Postmaster-General may authorize, and any vacancies occurring in class 1 in any State or Territory in which substitutes have been appointed shall be filled by the appointment thereto of those substitutes in the order of their appointment as substitutes without further certification. The time during which any substitute is actually employed in the service shall be counted as a part of his probation.

7. In case of public and pressing exigency demanding the immediate employment of experienced railway mail clerks who can not be at once supplied in the manner provided for in section 2 of this rule, or by transfer under rule V, or re-appointment under rule VI, there may be employed, without examination or certification, under such regulations as the Postmaster-General may prescribe, for a period not to exceed thirty days, which, with the consent of the commission, may be extended to sixty days, any persons who have been in the railway mail service who have the requisite knowledge and experience who may be available. Every such employment and the reasons therefor shall at once be reported to the commission.

RAILWAY MAIL RULE V.

1. Transfers may be made as follows:

(a) From the classified railway mail service to any classified post-office, and from any classified post-office to the classified railway mail service, upon requisition of the Postmaster-General.

(b) From the classified railway mail service to the Post-Office Department, and from the Post-Office Department to the classified railway mail service, upon requisition of the Postmaster-General.

2. No persons shall be transferred, as herein authorized, until the commission shall

have certified to the Postmaster-General that the person whom it is proposed to transfer has passed an examination to test fitness for the place to which he is to be transferred, and that such person has been at least six months next preceding the date of the certificate in the classified railway mail service, or in the classified service of the post-office or Department from which the transfer is to be made: *Provided*, That no employé shall be transferred to any grade which he could not enter by original appointment by reason of any age limitation prescribed by the civil-service rules.

RAILWAY MAIL RULE VI.

1. Upon requisition of the Postmaster-General, the commission shall certify for reinstatement, in a grade or class no higher than that in which he was formerly employed, any person who, within one year next preceding the date of the requisition, has, through no delinquency or misconduct, been separated from the classified railway mail service: *Provided*, That certification may be made, subject to the other conditions of this rule, for the re-instatement of any person who served in the military or naval service of the United States in the late war of the rebellion and was honorably discharged therefrom, without regard to the length of time he has been separated from the service.

RAILWAY MAIL RULE VII.

1. The General Superintendent of the railway mail service shall report to the commission—

(*a*) Every probational (whether substitute or regular), and every absolute appointment in the railway mail service in each State or Territory; every appointment under any exception to examination authorized by Railway Mail Rule II, clause 5; every re-appointment under Railway Mail Rule VI, and every appointment of a substitute to a regular place.

(*b*) Every refusal to make an absolute appointment and the reason therefor, and every refusal or neglect to accept an appointment in the classified railway mail service.

(*c*) Every transfer into the classified railway mail service.

(*d*) Every separation from the classified railway mail service and the cause of such separation.

(*e*) Every promotion or degradation in the classified railway mail service if such promotion or degradation be from one class to another class.

(*f*) Once in every six months, namely, on the 30th of June and the 31st of December of each year, the whole number of employés in each railway mail division, arranged by States and classes, showing the number of substitutes and the number of regular employés in each class in each State or Territory.

EXECUTIVE MANSION,
Washington January 4, 1889.

The above rules are hereby approved to take effect March 15, 1889; provided that such rules shall become operative and take effect in any State or Territory as soon as an eligible register for such State or Territory shall be prepared, if it shall be prior to the date above fixed.

GROVER CLEVELAND.

EXECUTIVE MANSION,
Washington, March 11, 1889. (Received March 12.)

Whereas civil-service rules for the railway mail service were approved January 4, 1889, to go into effect March 15, 1889; and

Whereas it is represented to me by the Civil Service Commission, in a communication of this date, that it will be impossible to complete arrangements for putting said rules into full effect on said date or sooner than May 1, 1889: It is therefore

Ordered, That said railway mail rules shall take effect May 1, 1889, instead of March 15, 1889; provided that such rules shall become operative and take effect in any State or Territory as soon as an eligible register for such State or Territory shall be prepared, if it shall be prior to the date above fixed.

BENJ. HARRISON.

REVISED CIVIL-SERVICE REGULATIONS.

ADOPTING ORDER.

The United States Civil-Service Commission, acting under authority of the act entitled "An act to regulate and improve the civil-service of the United States," approved January 16, 1883, and of the rules promulgated by the President, hereby makes the following regulations, and revokes all regulations heretofore made under authority of the act and rules aforesaid except the regulations governing promotion in the New York customs district and in the War Department, which shall remain in full force and effect.

GENERAL REGULATIONS.

REGULATION I.

DUTIES OF SECRETARY.

The secretary shall make minutes of the proceedings of the commission, and record them in a book to be kept for that purpose and to be entitled "Record of Proceedings." He shall have charge of the secretary's division of the commission, and shall have custody of and be responsible for the safe-keeping of the books, records, papers, and other property thereof. He shall enter upon the registers of eligibles the names of persons eligible to places in the classified departmental service, and, by direction of the commission, upon proper requisition therefor, make certification thereof. He shall perform such other duties as the commission may direct.

REGULATION II.

DUTIES OF CHIEF EXAMINER.

The chief examiner shall, under direction of the commission, supervise examinations, and act, as far as practicable, with the examining boards, to the best of his ability securing accuracy, uniformity, and justice in their proceedings. He shall have charge of the examiner's division of the commission, and shall have the custody and be responsible for the safe-keeping of the books, records, papers, and other property thereof. To him shall be referred all application papers for the classified departmental service, and such other application papers as the commission may direct, which he must approve or return to applicants for correction. He shall make arrangements for examinations; prepare and have printed, or supervise the preparation and printing of the questions to be used in examinations in all the branches of the classified service; consider and report upon all complaints or appeals referred to him; make an annual report of the work done under his supervision and of its results; and perform such other duties as may be imposed upon him by the commission.

REGULATION III.

BOARDS OF EXAMINERS.

1. Each board of examiners shall have a chairman and a secretary, to be designated by the commission.

2. Examiners shall perform such appropriate duties as may be assigned to them by the commission, and the commission will, in its discretion, designate one of its own members or an examiner to attend and supervise examinations.

3. Each board shall mark such examination papers as may be submitted to it by the commission; and when so required shall assist the chief examiner in the preparation of examination questions.

4. The central board, upon request of the chief examiner, shall revise and remark the papers of a competitor for any branch of the classified service who has complained of or appealed from the original marking; and in such cases all papers that would disclose the name or identity of the competitor shall be withheld from the board.

5. Each customs and postal board shall meet for the transaction of business on the first Thursday of each month, at which meeting the board shall agree upon a report to be made to the commission, in which the transactions of the board during the previous month shall be stated and suggestions concerning the business of the board or the condition of the service be made.

6. Special meetings of any board may be held at the call of the chairman, and shall be called by him at the request of any two members or on the direction of the commission, at least one day's written notice being given each member of the time and place of meeting.

7. The secretary shall—

Make minutes of the proceedings of the board and record them in a book to be kept for that purpose.

Keep in the manner prescribed by the commission a record of all applications filed with the board.

Return defective applications for correction.

Reject the applications of persons not entitled to examination, inform them of such action, and retain the rejected applications on file.

Mail to each applicant at least eight days before an examination a notice of the time and place of the examination.

Notify only the number specified when the commission in ordering an examination shall direct that only a limited number of applicants shall be examined, and in the order of the filing of their applications.

Report to the commission, on the proper blanks, all the examinations held by the board.

Keep the eligible registers required at his office.

Upon proper request of an appointing or nominating officer, made in writing, for the names of persons elegible to an existing vacancy, make certification in accordance with the rules and orders of the commission.

Report to the commission, on the proper forms, every certification made by him or by the board, and all matters reported to the board by the appointing or nominating officer.

Notify the commission when, in the opinion of the board, a necessity exists for holding an examination in addition to the regular examinations, suggesting a time for the same, subject to the approval of the commission, and stating the probable number to be examined for each class.

Perform such other duties as the commission, or the board of examiners with approval of the commission, may impose upon him.

Have charge of all books and papers of the board and be responsible for their safe-keeping.

8. Neither boards of examiners nor the individual members thereof shall answer inquiries not officially before them.

9. The central board shall be composed of as many members as the commission may from time to time determine.

10. A special or a supplementary board shall be composed of not less than three nor more than seven members.

11. A customs board shall be composed of not less than three nor more than nine members.

12. A postal board shall be composed of not less than three nor more than five members.

13. A railway mail board shall be composed of not less than three nor more than five members.

REGULATION IV.

APPLICATIONS.

1. All applications for examination for any branch of the classified service shall be made on the forms prescribed by the commission.

2. Each application for examination must be supported by three certificates, each to be made by a citizen of the State in which the applicant claims legal residence, who has known the applicant one year or longer. These certificates must be made on the forms prescribed and furnished by the commission with the application blank; and no other recommendation of an applicant shall be indorsed on any application paper or be received by the board of examiners.

3. Requests for blank forms of application and applications for examination for the departmental and for the Railway Mail Service must be addressed as follows: "United States Civil Service Commission, Washington, D. C." For the customs service as follows: "Secretary of Customs Board of Civil Service Examiners, city of ———, State of ———." And for the postal service as follows: "Secretary of Postal Board of Civil Service Examiners, post-office, city of ———, State of ———."

4. Applications for non-competitive examinations for admission to any branch of the classified service must be made in the same form and manner as applications for competitive examination are.

5. The name of every applicant whose application paper has been approved must be entered, in the order of the serial number of said paper, upon a record to be known as the "Record of Applications," which shall show the examination applied for, the age, residence, and education of the applicant and other facts concerning him.

6. Applications shall be indorsed by the secretary of the commission, or by the secretary of the board of examiners, with the date of reception, and shall, when approved, be numbered serially in the order of approval by the chief examiner, or by the secretary of the board of examiners, who shall note thereon the date of approval, which shall be held to be the date of filing, and shall determine the order of entry of such applications upon the record of applications.

7. Every defective application paper shall be returned to the applicant for correction; but every application paper showing the applicant not to be entitled to examination, shall be rejected, but shall remain on file with the commission or the board, and the applicant shall be informed why he can not be admitted to the examination requested by him.

REGULATION V.

EXAMINATIONS.

1. Two examinations for each classified customs district and post-office shall be held every year, as follows: In each customs district, one commencing on the first Tuesday of April and the other on the first Tuesday of October; in each post-office, one commencing on the first Tuesday of February, and the other on the first Tuesday of August; to continue from day to day, if necessary, until all applicants present upon regular notification have been examined. In the event of either of the days above named falling on a public holiday, the examination shall begin on the following day: *Provided*, That the commission shall order such additional examinations as may be required. Not less than twenty days' notice of the necessity for an additional examination must be given by the board requesting such examination, unless, in the opinion of the commission, the exigencies of the service require an examination to be held on shorter notice.

2. An applicant for a customs or a postal examination shall not be examined at any other custom-house or post-office than the one in which he desires to be employed.

3. If an applicant shall fail to receive due notice of an examination, or if he shall give a reason satisfactory to the commission or the proper board of examiners for failure to attend an examination of which he may have received due notice, he shall be notified to attend the next examination for the same class or place.

4. Examiners in charge of any examination shall be diligent in securing fairness a in preventing collusion or fraud therein.

5. The examination sheets shall be numbered.

6. Each competitor shall be designated by a number, to be known as his examinati number, which he must place in figures at the head of each examination sheet that may use.

7. At the commencement of an examination each competitor shall fill the blanks the "declaration sheet." He shall also write his *examination number*, and nothing el upon an envelope; into this envelope he shall put the declaration sheet, and then se the envelope. The envelope thus sealed must be delivered by the competitor to one the examiners in charge, and must not be opened until after the competitor's pap shall have been marked and his general average ascertained.

8. As soon as the envelopes containing the declaration sheets shall all have been d livered, sheet 1 shall be given to the competitors, and as soon as it shall have been co pleted sheet 2; and so on, each of the examination sheets in its order, according to number, no competitor being allowed to have two or more sheets at the same time. through no fault of the competitor, a sheet is spoiled, the examiners in charge may stroy the spoiled sheet and give the competitor another sheet of the same number. T time when a competitor receives a sheet, and the time when he finishes it, must stated at the top of the sheet.

9. The examiners in charge shall require every competitor, upon completion of e sheet, to surrender the sheet itself and all paper or papers upon which he may ha done preliminary work before writing his answers on the sheet.

10. The answers on examination papers must be written with ink; but prelimina work, on tablets or scrap-paper, may be done with pencil.

11. In the dictation exercise the passage to be dictated shall first be read aloud information, and then be dictated in groups of words, at the rate of not less than fift nor more than twenty-five words per minute. The examiner who reads the dictati must not repeat any group of words, or any word, dictated by him; but he should careful in giving the dictation to pronounce each word distinctly.

12. Examiners shall make to the whole class all explanations deemed necessary, a must not explain any question to any individual competitor.

13. After an examination shall have been commenced, no conversation or commu cation of any kind shall be permitted between competitors.

14. No examination shall begin earlier than 9 a. m. or continue later than 7 p. m.

15. Every examination must be held in the presence of more than one examiner, a in the room set apart either permanently or temporarily for such examination. E examinations in type-writing and other subjects which would annoy other persons be examined (or which must necessarily be confined to one person at a time), may be h in some room convenient to the general examination room, but where they may under the supervision of more than one examiner. No secret or private examinat will be permitted.

16. Each examination, except the examination in book-keeping or other examinati especially excepted from this regulation by the commission, shall be completed on t day on which it is commenced.

17. The time allowed for examinations shall be as follows:

(a) For each of the following-named departmemtal examinations:

For copyist, five (5) hours.

For printer's assistant and skilled helper, Bureau of Engraving and Printing, fo (4) hours.

For clerk, seven (7) hours.

For special pension examiner, seven (7) hours.

For principal pension examiner, seven (7) hours.

For medical examiner in the pension-office, seven (7) hours.

For fourth assistant examiner in the patent office, seven (7) hours.

For the State Department, seven (7) hours for the obligatory, and two (2) hours for each of the optional, subjects.

For type-writing, three and one-half (3½) hours.

For stenography, one and one-half (1½) hours.

For modern languages, two (2) hours for each language.

For law clerk, three (3) hours.

For proof-reading, four (4) hours.

For draughting (mechanical, topographical, or achitectural), nine (9) hours.

For copyist of drawings, six (6) hours.

For post-office inspector, eight (8) hours.

For topographic aid, seven (7) hours.

The examination in book-keeping shall be held on two successive days, seven (7) hours being allowed on the first day and five (5) on the second day. The first day shall be devoted to examination on the technical subject—book-keeping—and the second shall be devoted to examination on the other subjects.

(b) For each of the following-named customs examinations:

For clerk, seven (7) hours.

For law clerk, seven (7) hours.

For day inspector, five (5) hours.

For inspectress, five (5) hours.

For night inspector four (4) hours.

For messenger, four (4) hours.

For assistant gauger, seven (7) hours.

For assistant weigher, five (5) hours.

For examiner, seven (7) hours.

For opener-and-packer, four (4) hours.

For sampler, five (5) hours.

(c) For each of the following-named postal examinations:

For clerk, six (6) hours.

For carrier, five (5) hours.

For messenger, five (5) hours.

(d) Other examinations shall be regulated in the matter of time by the commission in the special order providing for such examinations.

(e) Twenty (20) minutes shall be allowed at the commencement of each examination for the work of filling the blanks of the declaration sheet and inclosing said sheet in the envelope, and ten (10) minutes for explanations and instructions by the examiner in charge, which time will not be included in the time allowed for the examination.

(f) No allowance will be made for time spent out of the examination room or for time lost in the examination room. Examiners must, however, be careful not to permit delay in the issuing of examination sheets.

18. Examiners must take care that all question sheets, whether completed or not, are turned in by the competitors before the expiration of the time to which the examination is limited; but any competitor who has been permitted to commence the examination at an hour subsequent to that at which the class commenced shall be entitled to the full time allowed for the examination. If any competitor shall abandon his examination, or shall fail to complete it within the time allowed, the examiner shall note the fact upon the last sheet had by such competitor.

19. During an examination no competitor shall leave the room without notice to an examiner. If a competitor leave the room before he has finished the sheet on which he is engaged he will not be permitted to finish it upon his return; it will be taken up, and the next sheet will be given to him.

20. Should the examiner have reason to suspect that competitors have copied from each other, or that they have improperly obtained information relating to the subject of the examination, the commission shall be informed thereof, and the examination papers of such competitors shall not be marked until the facts have been investigated; and if the commission shall find that any competitor has been guilty of bad faith or fraud his papers shall be canceled.

21. Applicants must supply themselves, for use in an examination, with pen, penholder, ink, lead-pencils, and erasers, and in technical examinations (such as type-writing or draughting) with the necessary machine or instruments.

22. Except by permission of the commission, chief examiner, or examiners, no visitor shall be allowed within the room during an examination.

23. No books, maps, or diagrams shall be permitted in the examination room for the use or information of the competitors, unless authorized by the commission.

24. A record of all non-competitive examinations shall be kept by the commission, and each customs and postal board shall, after each such examination held by the board, report to the commission all the facts in relation thereto.

25. No request for the examination of an applicant for the customs or postal service out of his order, as determined by the number of his application paper, shall be granted.

26. An applicant who has for any reason been denied examination in his order, may appeal to the commission.

REGULATION VI.

MARKING OF EXAMINATION PAPE

1. As soon as practicable after an examination the papers of the competitors shall be marked and the general average of each ascertained.

2. A competitor, after receiving notice of his grade, may, in person or by duly authorized agent, in the presence of an examiner, inspect his examination papers, and if in his opinion injustice has been done him, he may, within thirty days after the receipt of notice, appeal to the commission, specifying particularly and in detail the cause of the complaint. The commission will promptly decide all such appeals, and, if necessary, revise the marking of appellant's papers, or otherwise do justice in the premises.

3. All examination papers shall be marked under the following rules:

Mark every correct answer	100
Mark every faulty answer according to its value on a scale of 100, and ascertain the value of a faulty answer as follows: Mark each error in an answer (error in spelling, capitalization, computation, punctuation, or by omission, addition, substitution, transposition, etc.) as herein specifically directed, and deduct the sum of the error-marks of each answer from 100	The difference between the sum of the error-marks of each answer and 100 will be the mark of the answer.

ORTHOGRAPHY.

	From 100 deduct—
For each error in orthography *	5
For each error in capitalization	1

COPYING—writing from dictation.

In this exercise no word or date shall be abbreviated.

For each error in orthography	1
For each word omitted	2
For each word inserted or added	2
For each word substituted †	1
For each transposition	1
For each abbreviation	1
For each error in capitalization	1
For each failure to use the period at the end of a sentence, and for each grossly improper use of a punctuation mark	1
For irregularity in left-hand margin	1

* If, in the dictation for spelling, the competitor spell correctly any other tense of the word dictated or any compound thereof, he shall be given full credit.

† No charge shall be made for the omission of the word or words in place of which the substituted word or words have been written.

COPYING—writing from plain copy or from rough draft.

	From 100 deduct—
For each error in orthography	5
For each word or figure* omitted	5
For each word inserted or added	5
For each word or figure substituted	5
For each transposition	5
For each abbreviation not in the copy	5
For each failure to capitalize according to copy	5
For each failure to punctuate according to copy	5
For each failure to paragraph according to copy	5
For irregularity in left-hand margin	5
For misdivision of a word at the end of a line	3
For each omission of the hyphen in dividing a word at end of line	1

PENMANSHIP.

Mark penmanship† on letter (or in copyist's examination on copy of rough draft) according to its value on a scale of 100.	
Mark penmanship on exercise in copying from plain copy according to its value on a scale of 100.	
Divide the sum of the marks on letter and copying by 2	The quotient will be the mark on penmanship.

ARITHMETIC.

Notation and Numeration.

For each improper use of the sign $, £, or other denomination of quantity, or for the substitution of one for the other	25
For error in denomination of decimal: for each place, not exceeding three	25
For a required decimal expressed as a common (or vulgar) fraction	50
For each numeration point placed to the right of the decimal point	5
For each use of the comma where the decimal point should be used	5
For each use of the period where the comma should be used	5
For each figure substituted	10
For each figure inserted	10
For each figure prefixed or suffixed	10
For each figure omitted	10
For incorrect pointing	10
For writing cents and mills as a decimal part of a dollar when an amount of United States money is required to be expressed in words	10

Fundamental Rules.

For each error in computation	10
For errors in pointing off decimals: for one place	25
for two places	30
for three places	35
for four places	40
for five places	45
for six places	50
For use of the comma where the decimal point should be used	5

Fractions and Problems.

Above charges for fundamental rules apply also to fractions and problems.	
For wrong process, producing incorrect result	100
For complex statement, right result being produced	10
For complex process or method, right result being produced	10
If, when "work" or "operation in full" is required, the correct answer is given, but no "work" is shown	75
For fractions in answer not reduced to lowest terms, or answer in denominate numbers not expressed in the several denominations, beginning with the highest	20
In denominate numbers, for errors in quantity of one denomination contained in a unit of a higher denomination, according to the gravity of the error	10 to 25
If part of work is correct and part incorrect, or, if problem is incomplete, credit in proportion to correct work done.	

* The cipher is considered as a figure.

† In determining the value of penmanship legibility, formation of letters, and general appearance must be considered.

	From 100 deduct—
For omitting days of grace in problems in bank discount, or in other problems when specified.	25
If, when "work" or "operation in full" is required, the correct answer is given and the process is clearly indicated, but not written in full	15
If no attempt is made to answer	100
For failure to indicate the answer in problems by the letters: *Ans.*, or otherwise	5
For each failure to use the sign $ or £, or any other monetary or commercial sign, or any sign by which the relations of quantities are expressed, when the use of such is required in the statement or solution of a problem	5

BOOK-KEEPING AND ACCOUNTS.

For omission of heading or for wrong heading	20
For reversed items (every item that should be a debit being made a credit, and *vice versa*)	50
For every misplacement of credits or debits (where the preceding rule does not apply)	10
For omission of date or item	10
For omission or misplacement of balance	20
For failure to bring balance down, when required	10

ELEMENTS OF THE ENGLISH LANGUAGE.

Each error in a sentence given for correction shall be valued at the amount that would be produced by dividing 100 by the sum of the errors contained in the sentence. If, in correcting a sentence, errors are made in the answer that are not in the sentence given for correction, these errors shall be added to the errors of the sentence to be corrected, and each error shall be valued at the amount resulting from a division of 100 by this sum.

The sum of the error values credited for errors corrected in the answer will be the mark of the answer.

Any exercise in this subject (letter-writing excepted) which does not present a definite number of points, so that it may be marked under definite rules, will be marked in the discretion of the examiners upon the following considerations: (1) Whether the answer covers the question; (2) whether it is accurate; (3) whether it is unambiguous; (4) as to the degree of information and capacity it exhibits.

In the discretion of the examiners.

LETTER-WRITING.

In marking the letter, form, style, and matter will each be marked on a scale of 100, and the sum of these marks will be divided by 3.

The quotient resulting from a division of the sum of the markings on form, style, and matter by 3 will be the mark of the *letter*.

In marking the letter, the errors below mentioned shall be charged to form, as follows:

	From 100 deduct—
Form. Omission of date line	10
Omission of name of place or date, in date line	5
Omission of address	10
Omission of name of person or place, in address	5
Omission of subscription	10
For each incompletely written (1) name of place in date line or address; (2) date or address; (3) subscription	5
For each error in spelling	3
For each error in the division of words	3
For each error in syntax	3
For irregular left-hand margin	3
For repetition of address	5
For signing name instead of examination number	5
For each improper abbreviation	1 to 3
For each word omitted or repeated	1
For each error in punctuation and in the use of capitals	1

The sum of the error marks shall be deducted from 100, and the remainder will be the mark on *form* in the marking of the letter.

No definite directions can be given for marking the style and matter of the letter, and the judgment of the examiners must therefore determine the value of each. But it will be proper in determining the mark on style to consider:

Style. (1) The mode of expressing the thought or facts; (2) rhetorical expression; (3) choice of words and their arrangement (not including grammatical construction).

Matter. And in determining the mark on matter, it will be proper to consider: (1) Adherence to the subject; (2) intelligence and ability shown.

In marking *style* and *matter*, the judgment of the examiners determines the mark on each.

GEOGRAPHY, HISTORY, AND GOVERNMENT.

In marking these subjects, each answer shall be marked, in the discretion of the examiners, according to its value on a scale of 100.

When the question requires in the answer a specified number of states, countries, persons, places, locations, or things, the quotient arising from the division of 100 by the number of states, countries, etc., required shall be the credit to be given for each state, country, etc., correctly named; if a greater number is given in the answer than is required, the additional number of states, countries, etc., shall

be added to the number required by the question, and the quotient arising from the division of 100 by the number thus obtained shall be the credit to be given for each state, country, etc., correctly named

GENERAL PROVISIONS.

1. Any error not covered by the foregoing rules will be marked in the discretion of the examiners.

2. The examiners, having satisfactory evidence that an answer has been borrowed or otherwise improperly obtained, the question will be marked 0, and the examination papers, with the evidence, referred to the commission.

3. The examination papers of every competitor must be marked by the board of examiners, and each examiner shall initial every paper marked by him. Should a review by another examiner be necessary, he also shall initial every paper reviewed by him. Each examiner who marks a subject shall mark and initial with pencil or ink of different color from that of the pencil or ink used by any other examiner marking the same subject.

4. All errors noted must be indicated by underlining or otherwise. The charge for each error must, when practicable, be noted on the margin of the sheet.

5. In finding the average of the marks on any subject by dividing the sum of the credits by the number of questions, the unanswered questions must be counted in obtaining the divisor.

FOR MARKING THE "READING OF ADDRESSES."

(Railway Mail and Postal Services.)

Two marks are given for this subject—one for accuracy, the other for speed. The sum of the marks for accuracy and for speed divided by 2 gives the average for the subject.

The mark for accuracy will be determined by the following rule: Count all the errors on the cards which were read within the 10 minutes allowed for the exercise and count 2 errors for each address not read within the 10 minutes (if there be any such). If the sum of all the errors thus found is more than an average of 2 to each address (*i. e.* to each card) reject the excess. Subtract the sum of these errors, thus found, from 100 and the result will be the mark for accuracy.

To ascertain the mark on speed the following table should be used. The first column indicates the number of minutes used in reading the addresses, and the second column the mark for speed:

3 Minutes	100	5½ Minutes	87	8 Minutes	72
3½ Do	98	6 Do	84	8½ Do	69
4 Do	96	6½ Do	81	9 Do	66
4½ Do	93	7 Do	78	9½ Do	63
5 Do	90	7½ Do	75	10 Do	60

The above table shows the mark for every half minute, when the competitor reads all the addresses in ten minutes or less. If all the addresses are not read within ten minutes the mark will be determined as follows: For each card not read within ten minutes a charge of 1.2 (one and two-tenths) will be made, and the sum of these charges subtracted from 60 will give the mark for speed.

SPECIAL AND SUPPLEMENTARY EXAMINATIONS.

The examiners must, when rules for marking the technical, special skill, or practical test parts of any examination have not been prescribed, determine upon their own judgment the value of the answers in such parts of any examination; but, as far as practicable, the papers of special and supplementary examinations must be marked under these rules.

EXAMINATION IN TYPE-WRITING.

The examination in type-writing consists of four subjects, all of which are practical tests. 1. Tabulating—arranging in tabular form certain data given in the question. 2. Transcribing rough draught. 3. An exercise intended to test the applicant's knowledge of the use and adjustment of the machine. 4. A dictation, in which time is an important element. Speed and accuracy will be considered in marking all the subjects of this examination, each being marked on a scale of 100; the average on the subject being determined by dividing the sum of the marks on speed and accuracy by 2.

1. *Tabulating exercise.*

In marking the tabulating exercise, errors in spelling, and the omission, substitution, and transposition of figures, and errors in the use of words, will be charged, as nearly as may be, under the rule for marking the copying exercise.

TIME CONSUMED will be marked according to the following scale: If the competitor consume only twenty minutes in tabulating he will be credited with 100. When the time consumed is more than twenty minutes and not more than thirty minutes, ½ of 1 will be deducted from 100 for every minute consumed more than twenty minutes. When the time consumed is more than thirty minutes and not more than forty-two minutes, ½ of 1 will be deducted from 95 for every minute consumed more than thirty minutes. When the time consumed is more than forty-two minutes and not more than sixty minutes, 1 will be deducted from 86 for every minute consumed more than forty-two minutes. When the time consumed is more than sixty minutes and not more than eighty minutes, 1½ will be deducted from 68 for every minute consumed more than sixty minutes.

The examiners will mark, in their discretion, neatness, accuracy, and completeness in tabulating

2. *Transcribing rough draught.*

In marking the exercise in transcribing rough draught, spelling, capitalization, and punctuation will be considered, and marked as nearly as may be under the rule for marking the copying exercise.

TIME CONSUMED will be marked according to the following scale: If the competitor consume only fifteen minutes in transcribing rough draught, he will be credited with 100. When the time consumed is more than fifteen minutes and not more than twenty-five minutes, ½ of 1 will be deducted from 100 for every minute consumed more than fifteen minutes. When the time consumed is more than twenty-five minutes and not more than thirty-five, ¾ of 1 will be deducted from 95 for every minute consumed more than twenty-five minutes. When the time consumed is more than thirty-five minutes and not more than forty-five minutes, 1 will be deducted from 87.50 for every minute consumed more than thirty-five minutes. When the time consumed is more than forty-five minutes and not more than sixty minutes, 2 will be deducted from 77.50 for every minute consumed more than forty-five minutes.

3. *Copying and spacing.*

In the copying and spacing exercise particular consideration will be given to the POSITION OF THE LINES AND THE SPACING BETWEEN LINES, the competitor being required to reproduce, as nearly as possible, a *fac-simile* of the copy.

ACCURACY will also be considered, in marking which, spelling, capitalization, punctuation, and the omission, addition, or substitution of a word or figure will be marked under the rule for marking the copying exercise.

TIME CONSUMED will be marked under the rule for marking the tabulating exercise.

4. *Dictation exercise.*

In marking ACCURACY, spelling, capitalization, punctuation, and the omission, addition, or substitution of a word or figure will be considered and marked under the rule for marking the dictation exercise.

TIME CONSUMED will be marked according to the following scale: For a SPEED of 65 words per minute a credit of 100 will be given, and for every word in speed less than 65 per minute 1 will be deducted from 100 down to and including 45 words per minute. For a speed of 45 words per minute a credit of 80 will be given, and for every word in speed less than 45 down to and including 35, a deduction of 1½ from 80 will be made. For a speed of 35 words per minute a credit of 65 will be given, and for every word in speed less than 35 a deduction of 2 from 65 will be made.

EXAMINATION IN STENOGRAPHY.

This examination consists of TWO EXERCISES IN DICTATION, to be written by each of the competitors in stenographic characters, which he must then transcribe into longhand. One of the dictation exercises is a selection from a speech, and the other is a letter, the two exercises containing not less than 300 words. The transcript will be compared with the printed text from which the dictation was given, and, under the rule for marking the copying exercise, charges will be made for the omission, addition, or substitution of words, and for errors in spelling. Under the rule for marking exercises in dictation, charges will be made for errors in punctuation and capitalization.

An important element in this examination is SPEED in writing words in stenographic characters, which will be marked upon the following scale: For a speed of 150 words or more per minute, a credit of 100 will be given. For a speed of less than 150 and not less than 80 words, 2½ will be deducted from 100 for every 5 words less than 150, any number of words less than 5 being counted as 5. For a speed of less than 80 and not less than 65 words, 3½ will be deducted from 65 for every 5 words less than 80, any number of words less than 5 being counted as 5.

STENOGRAPHY AND TYPE-WRITING.

A weight of 2 is given to stenography, and a weight of 1 to type-writing. The general average of all eligibles who stand upon the register in stenography, and also upon the register in type-writing, will be ascertained, and the general average of each eligible in stenography multiplied by 2, the product added to his general average in type-writing, and the sum divided by 3. In this manner a general average of those who are eligible in both stenography and type-writing will be ascertained.

INSTRUCTIONS FOR MARKING TELEGRAPHY.

Mark the practical questions according to the completeness and accuracy of the answers.

Mark the "receiving" and "sending" exercises separately, giving credit for speed and accuracy in accordance with the rules given below.

To find the general average add the averages on the "practical questions," the "sending exercise," and the "receiving exercise," and divide the sum by 3.

The dictation exercise should consist of about 175 words.

For a speed of 40 words a minute in "sending" or "receiving" give a mark of 100.

	From 100 deduct—
every word less than 40 words a minute	1.5
each word omitted, added, or substituted in sending or receiving	5
poor or defective sending	5 to 15
poor or defective copy in receiving	5 to 15
every "break" in sending or "receiving"	2

RELATIVE WEIGHTS OF SUBJECTS.

5. There shall be given to every subject in an examination a relative weight according to its importance therein, and the general average of each competitor shall be ascertained as follows:

Multiply the average of the marks on each subject by the number indicating the relative weight of the subject and divide the sum of the products thus obtained by the sum of the relative weights. The quotient will be the general average. For example:

CLERK EXAMINATION.

Subjects.	Averages.	Relative weights.	Products of multiplication of averages by relative weights.
Orthography	90	2	180
Penmanship	80	3	240
Copying	90	3	270
Letter-writing	80	3	240
Elements of the English language	80	1	80
Arithmetic	95	5	475
Elements of book-keeping and of accounts	75	2	150
Elements of the geography, history, and government of the United States	70	1	70
Divide the sum of the products by the sum of the relative weights...		20	1,705
And the general average is ascertained to be			85.25

REGULATION VII.

CERTIFICATIONS.

1. Immediately after the papers of an examination shall have been marked, the names of the eligibles shall be entered upon the appropriate registers.

2. If, when requisition is made for certification from any register of eligibles of a customs district or of a post-office, or from a departmental supplementary or special register of eligibles, there are thereon the names of eligibles who have claim of preference under section 1754 of the Revised Statutes, all of them, if they do not exceed three in number, shall be certified. If the requisition is for certification from the copyist or the clerk register, the names of all the preference claimants who are then eligible shall be listed together in the order of their grades, and from this list the first three names shall be certified: *Provided*, That eligibles not having claim of preference shall be entitled to three certifications independently of any certifications that may be given to them in connection with eligibles having a claim of preference.

3. Any eligible who is on a clerk, or copyist, and also on a supplementary register may be certified from either, and when appointed from one shall be dropped from the other. Any applicant who takes the basis examination (clerk or copyist) for the sole purpose of enabling him to take a supplementary examination, and who expresses that purpose in his application, shall be certified from the supplementary register only. But an eligible who is on a supplementary register, and who declines an appointment upon certification from the clerk or copyist register because he desires to be appointed from the supplementary register only, but who had not previously expressed that desire in writing, shall, by such declination, forfeit his right to certification from the supplementary register. Any eligible who is on a clerk, or copyist, and also on a special register, may be certified from either, and if appointed from the clerk or copyist register shall remain eligible on the special register; but if appointed from a special register, shall be dropped from all other registers.

4. When an eligible is offered an appointment which he declines, he shall not be again certified unless he shall request the benefit of the remaining certifications which the rules allow, in which case such certification may be made.

5. When the papers of a postal or customs examination shall have been marked, and the names and grades of the eligibles ascertained, such names and grades shall be made public by being conspicuously posted in a place accessible to the public, and all certifications and appointments of such eligibles shall be made public in like manner.

6. No request to have the name of an eligible certified out of its order on the register of eligibles shall be granted.

7. The term of eligibility under a special or supplementary departmental examination shall be two years from the date the name is entered on the register.

PROMOTIONS IN DEPARTMENTAL SERVICE.

REGULATIONS.

[Applied to the War Department May 7, 1887.]

BOARDS OF PROMOTION, HOW CONSTITUTED.

SECTION 1. In each Department a board of promotion shall be constituted in the following manner:

Clause 1. Upon the written request of the commission the head of the Department shall name—

1. Not less than six persons of a grade not below class four, whom he regards as the most competent of those serving under him, for places on the board of promotion, stating generally their qualifications; and from all thus named the commission shall select three persons as the board of promotion of that Department.

2. In like manner, not less than two persons of a grade not below class four, serving in each Bureau of his Department, one of whom shall be selected as the auxiliary member of the board for that Bureau. Each auxiliary member shall act with all the authority of a member of the board in matters relating to promotions in the Bureau for which he has been appointed; but at no other time shall he act as a member of the board. Auxiliary members may, however, by action of the board, be called in consultation with it upon matters relating to the general subject of promotions. In the event of an equal division in the board, when an auxiliary member is acting, the commission shall decide.

Clause 2. Upon designation by the commission, one member of each board shall act as chairman and another as secretary.

DUTIES OF BOARDS AND OF PROMOTING OFFICERS.

SECTION 2. Departmental boards of promotion shall perform the following duties:

Clause 1. Immediately after the organization of a board of promotion in any Department, the head of that Department shall furnish to the commission, upon its request, a schedule of the several classes of officers, clerks, and employés who have been classified in said Department under the civil-service act of January 16, 1883 (indicating those excepted from examination under the civil-service rules), in each Bureau of the Department, with a list of the names of the persons in each of said classes.

Clause 2. Upon receipt of the schedule of classes of any Department the commission shall require the promotion board of said Department to determine and report to it the examination necessary for promotion to each class above the lowest, excepting the special class hereinafter provided for.

Clause 3. The lowest class from which promotions may be made by examination and certification, as herein provided for, is the class giving an annual salary of $1,200: *Provided*, That any person in a class giving an annual salary of $1,000 or less, appointed thereto upon certification from the clerk register, may, after probation and absolute appointment, compete for promotion to class two.

Any person, appointed upon certification from the clerk register to a place giving an annual salary of $1,000 or less, may be promoted, in the discretion of the head of the Department, during probation or after absolute appointment, to class one; and any person in a class giving an annual salary of $900 or less, appointed thereto upon certification from the copyist register, may, after probation and absolute appointment, upon certification by the commission that such person has passed the clerk examination, be promoted, in the discretion of the head of the Department, to class one; and any person in a class giving an annual salary of less than $900, appointed thereto upon certification from the copyist register, may be promoted, in the discretion of the head of the Department, during probation or after absolute appointment, to the $900 class.

Any person who, by reason of any classification, is in the classified departmental service, in a class below class one, but who was not appointed upon examination and certification by the commission, shall be entitled to the same right of promotion to class one, and of competition for promotion to class two, as those appointed from the clerk register of the commission to a class below class one.

Clause 4. Examinations for promotion shall be conducted under the direction of, and upon written questions approved by, the commission; and the boards of promotion shall, under the supervision of the commission, mark the examination papers of all competitors, excepting those of competitors of the special class hereinafter provided for. But it is especially provided that one of the subjects of each examination shall be "efficiency," which shall be marked by the head of the Bureau, as follows:

A list of the names of the competitors in each case below the class to which promotions are to be made shall, after each examination, be furnished to the head of the Bureau, who shall mark the "efficiency" of each competitor on a scale of 100, and in so doing shall consider the attendance, application, habits, ability, and adaptability of each to the duties of the class in which he is serving; and hereafter such record shall be kept of the habits and work of the employés in the various Departments as will show their efficiency.

Clause 5. Whenever the head of any Department shall so request, the examinations for promotion in his Department shall be made without regard to Bureaus, and he shall mark the efficiency of the competitors. In such examinations no auxiliary member of the board of promotion shall act. And whenever the head of any Department shall so request, the examinations for promotion in any Bureau thereof shall be made by divisions, the head of the Bureau to mark the efficiency of the competitors, and the auxiliary member of the board of promotion for that board to act.

Clause 6. To every subject in an examination a relative weight, according to its importance in the examination, shall be given. The result of each examination shall be ascertained as follows: Each question will be marked on a scale of 100; the average of the marks in each subject will be multiplied by the number indicating the relative weight of the subject, and the sum of the products will be divided by the sum of the relative weight; the quotient will be the competitor's standing in the examination.

All competitors who attain an average of 75 per cent. shall be eligible to promotion, and their names, with the average obtained by each, shall be entered upon a register of eligibles.

Clause 7. Positions requiring technical, professional, or scientific knowledge, or knowledge of a language other than the English language, or peculiar or special skill, on the part of the persons occupying them, for which examinations have been or may be provided by the commission, shall be known, for purposes of promotion, as positions of the

special class; and promotions to any position in the special class shall be made in the following manner:

Whenever the commission shall order an examination to be held for the purpose of determining the fitness of applicants in any bureau for promotion to any position in the special class of said Bureau, the promotion board, acting with the auxiliary member for that Bureau, shall give proper notice that all persons in said Bureau wishing to compete for promotion may be examined, upon making written application for such examination, at a time and place to be named in said notice. The questions for such examination shall be prepared by the special board of examiners which is charged by the commission with the duty of ascertaining the qualifications of applicants for admission by original appointment to the position in the special class for which the examination for promotion is to be held. All such questions must be submitted to the commission for approval.

The examination papers of every examination for promotion to the special class shall be marked by the appropriate special board of examiners; and the board, accepting the rating in efficiency, made in the manner prescribed in clause 4 of this section, shall grade each applicant as provided in clause 6, and furnish to the commission a list of the names of all the applicants, indicating the grade of each; and the names of all applicants graded at 75 per cent. or over shall be placed upon a register of eligibles.

Clause 8. The registers of persons eligible to promotion shall be kept by the commission; and upon the written request of the promoting officer the commission shall certify to said officer a list of the names of all the persons eligible to promotion to the vacancy to be filled; and from among the persons whose names are thus certified the promotion shall be made.

Clause 9. Persons who fail to obtain the minimum grade of eligibility to promotion shall be re-examined after the expiration of six months; and if they then again fail to pass, may be reduced to a lower class or be dismissed from the service. This provision, however, shall not apply to persons who are examined for promotion to the special class.

Clause 10. Each board of promotion shall meet on the first Saturday of July, annually, and make to the commission a report of its transactions during the preceding fiscal year and of the results of its work. The board shall also meet at such other times as it may determine upon.

WHO SHALL COMPETE.

SECTION 3. Promotions shall be made from class one and from classes under class one, as hereinbefore provided, to the second class; from the second to the third class; from the third to the fourth class. All persons in the class immediately below the class to which promotions are to be made must be examined for promotion; and, upon recommendation of the board of promotion, the commission may open competition to persons in one or more of the classes immediately below the class required to be examined or which has been examined. Persons in the classes below class one, appointed from the clerk register, upon making to the board of promotion written application therefor, shall be examined for promotion to class two. Upon written application for any supplimentary or special examination, any person in a class not below the $1,000 class may be examined for promotion to the special class at such times as the commission may direct.

THE COMMISSION AND PROMOTION EXAMINATION.

SECTION 4. All examinations for promotion shall be supervised and controlled by the commission.

FOR DISMISSAL.

SECTION 5. Any member of a board of promotion who discloses, or any employé who procures or attempts to procure, any of the questions of an examination for promotion, shall be reported by the commission to the head of the department for dismissal from the service.

HOW PROMOTED PERSONS SHALL BE ASSIGNED.

SECTION 6. All persons promoted shall be assigned to the duties of the grade to which they have been promoted, unless the interests of the service require their assignment to other duties, which fact shall be reported by the head of the bureau or office to the head of the Department.

PROMOTIONS IN NEW YORK CUSTOMS DISTRICT.

REGULATIONS.

[In force January 4, 1887.]

In the exercise of the power vested in the President by the Constitution, and by virtue of section 1753 of the Revised Statutes and of the civil-service act approved January 16, 1883, the following regulations governing promotions in the customs service at the city of New York are hereby approved and promulgated:

REGULATION 1. The board of examiners of the New York customs district may at any time, with the approval of the Civil Service Commission, order an examination for promotion, and at least five days before the examination is to take place shall cause a notice to be posted conspicuously in the office for which such examination is to be held, and shall state in said notice the class or classes to test fitness for promotion to which the examination is to be held, and the time and place of examination. Promotions shall be from class to class; and the examination of persons in one class shall be to test their fitness for promotion to the next higher class: *Provided, however*, That if in any examination for promotion the competitors in the next lower class shall not exceed three in number, the board may, at its discretion, open the competition to one or more of the classes below the class in which there are not more than three competitors. All clerks who shall have served in any grade for six months or more since their absolute appointment must enter the first examination held thereafter for promotion to the next higher class, but their attendance at other examinations for the same class shall be voluntary.

REGULATION 2. The examination must be held upon such subjects as in the opinion of the board of examiners, with the approval of the Commission, the general nature of the business of the office and the special nature of the positions to be filled may require. In grading the competitors due weight must be given to the efficiency with which the several competitors shall have performed their duties in the office; but none who shall fail to obtain a *minimum* standard of 75 *per centum* in the written examination shall be certified for promotion.

REGULATION 3. The whole list of eligibles from which the promotion is to be made shall be certified to the nominating officer, and shall expire when suspended by the register resulting from the next examination.

REGULATION 4. Any person employed in any of the offices to which these regulations apply may be transferred without examination after service of six months consecutively since January 16, 1883, from one office to a class no higher in another office, upon certification by the board of examiners that he has passed an examination for the class in which he is doing duty, and with the consent of the heads of the respective offices and the approval of the Secretary of the Treasury.

REGULATION 5. The Civil Service Commission may at any time amend these regulations or substitute other regulations therefor.

ADDITIONAL REGULATIONS GOVERNING PROMOTIONS IN THE NEW YORK CUSTOMS DISTRICT.

[Promulgated February 24, 1887; amended January 26, 1888.]

The following examinations and promotions are included among those authorized by the "Regulations governing promotions in the customs service at the city of New York," approved January 4, 1887, viz:

1. Any person who has been absolutely appointed a day inspector may, upon passing the regular examination for promotion from class one to class two, clerk's grade,

in the surveyor's office, be promoted to class two, clerk's grade in that office; any son who has been absolutely appointed a day inspector, or a store-keeper, may, u passing the regular examination from class one to class two, clerk's grade, in the lector's office, be promoted to class two, clerk's grade, in that office; and any pe who has been absolutely appointed a day inspector or an assistant weigher may, u passing the required examination, be promoted to the grade of weigher, and co tition for that grade shall be limited to day inspectors and assistant weighers.

2. Any person in the office of the appraiser who has served not less than twelve secutive months as opener-and-packer, or as sampler, may, upon passing an exan tion prepared by the board of examiners, under the direction of the commissio promoted to class one, clerk's grade, in that office; and any person who has been lutely appointed as clerk in the office of the appraiser may, upon passing an ex nation prepared by the board of examiners, under the direction of the commissio promoted to the grade of examiner in that office: *Provided*, That if in any exan tion for promotion from the grade of clerk to that of examiner there are less three competitors the competition shall be opened to the grade of sampler.

3. The examinations for promotion herein authorized shall be ordered as foll When any notice is given of an examination for promotion from class one to class in the collector's or surveyor's office, under Promotion Regulation 1, it shall incl notice to all inspectors who desire to be examined for promotion to class two, cl grade; and the names of the inspectors who pass the examination shall be placed o list of eligibles for promotion to class two in the office for which the examinatio held. When the appraiser shall request the board of examiners to hold an examin for promotion in his office from the grade of opener-and-packer and from the gra sampler to class one, clerk's grade, or for promotion from the grade of clerk t grade of examiner, the board shall, with the approval of the commission, order examination; and the names of the openers-and-packers and of the samplers who the examination shall be placed on the list to be known as the "List of openers- packers and samplers eligible for promotion to class one, clerk's grade, appra office;" and the names of the clerks who pass the examination shall be placed list to be known as the "List of clerks eligible for promotion to the grade of e iner in the appraiser's office." Certification shall be made from these lists under motion Regulation 3.

Notice of any promotion examination hereby authorized shall be given in the n ner provided by Promotion Regulation 1; and it is expressly provided that no competitive (or pass) examinations shall be held under the authority to hold pr tion examinations hereby conferred.

THE CLASSIFIED SERVICE.

The *Classified Service* for which examinations are required is divided into fou tinct branches: (1) The *Departmental Service* at Washington; (2) the *Customs Se* (3) the *Postal Service;* and (4) the *Railway Mail Service.*

Certain of the places within the classified service (few in number; see pa *post*) are excepted from examination by the civil service rules and may be fill the discretion of the appointing officers, without examination; a few other p (see page 62 *post*) may be filled by non-competitive examination, the appoi officer nominating the person to be examined, the commission determining the acter of and conducting the examination; but the great mass of the places are by competitive examination.

The Classified Departmental Service includes the eight Executive Department Civil Service Commission, and the Department of Labor, and embraces all the cers, clerks, and other employés in these departments, except those appointed b

President by and with the advice and consent of the Senate, and those employed merely as messengers, watchmen, workmen, or laborers.

The War Department classification embraces within the classified service of that department the clerks and employés of the several depot quartermasters' offices, and that of the Post-Office Department includes in the classified service of that department post-office inspectors and the employés at the postal-note, postal-card, and postage-stamp agencies; but the employés at these agencies are excepted from examination.

The classified customs service.—The existing classification of the customs service is that made by the Secretary of the Treasury under date of March 17, 1883, and is as follows:

Class A, all persons not employed merely as laborers or workmen, receiving a compensation amounting to $900 or more, but less than $1,200 per annum.

Class 1, all persons receiving a compensation amounting to $1,200 or more, but less than $1,400 per annum.

Class 2, all persons receiving a compensation amounting to $1,400 or more, but less than $1,600 per annum.

Class 3, all persons receiving a compensation amounting to $1,600 or more, but less than $1,800 per annum.

Class 4, all persons receiving a compensation amounting to $1,800 or more, but not including any officer confirmed by the Senate.

The following language, taken from the fifth report, may be repeated here:

To this classification there are serious objections, among them the following:

The lower limit of the classification is determined by compensation and not by the character of the position or the duty performed, and the line is drawn arbitrarily at $900. All below this line are outside and all above it are inside the classified service, regardless of designation or duty. At one custom-house night inspectors are in the classified service, because they are compensated at the rate of $900 or over, while at another custom-house they are outside, because compensated at a rate less than $900. The same is true with respect to certain other classes of employés besides night inspectors. But more than this. It may happen at any custom-house that employés in the same class are compensated at different rates, some at $900 or above, and others at less than $900. This is the case at the present time with respect to the grade of opener and packer at the port of New York. A certain number of the places in this grade must be filled by examination, and a certain number may be filled without examination, both classes performing the same duty and having the same designation. These facts, taken in connection with the further fact that the compensation of employés in the customs service is, as a rule, fixed, not by statute, but by the Secretary of the Treasury, who has an absolute discretion in the matter, furnish sufficient reasons for reclassifying this service on a different and more satisfactory basis.

The following is suggested as a substitute for the present classification, and its adoption recommended:

TREASURY DEPARTMENT,
Washington, D. C., ——, 18—.

It is ordered that the officers, clerks, and other employés at the several classified customs districts be, and they are hereby, arranged in the following classes:

Class A, all persons receiving an annual salary of less than $1,000, or a compensation at the rate of less than $1,000 per annum.

Class B, all persons receiving an annual salary of $1,000 or more, or a compensation at the rate of $1,000 or more, but less than $1,200 per annum.

Class 1, all persons receiving an annual salary of $1,200 or more, or a compensation at the rate of $1,200 or more, but less than $1,400 per annum.

Class 2, all persons receiving an annual salary of $1,400 or more, or a compensation at the rate of $1,400 or more, but less than $1,600 per annum.

Class 3, all persons receiving an annual salary of $1,600 or more, or a compensation at the rate of $1,600 or more, but less than $1,800 per annum.

Class 4, all persons receiving an annual salary of $1,800 or more, or a compensation at the rate of $1,800 or more, but less than $2,000 per annum.

Class 5, all persons receiving an annual salary of $2,000 or more, or a compensation at the rate of $2,000 or more, but less than $2,500 per annum.

Class 6, all persons receiving an annual salary of $2,500 or more, or a compensation at the rate of $2,500 or more per annum.

The classified customs service embraces those customs districts in each of which there are as many as fifty employés, of which there are eleven, as follows:

1. Baltimore, Md.
2. Boston, Mass.
3. Burlington, Vt.
4. Chicago, Ill.
5. Detroit, Mich.
6. New Orleans, La.
7. New York, N. Y.
8. Philadelphia, Pa.
9. Port Huron, Mich.
10. Portland, Me.
11. San Francisco, Cal.

As stated in the foregoing classification of the customs service, all the officers, clerks, and employés in these several districts not appointed by the President, by and with the advice and consent of the Senate, or not employed merely as workmen or laborers, whose compensation is $900 per annum or over, are in the classified customs service and subject to the provisions of the civil service law and rules.

The classified Post-Office service.—The classification of the Post-Office service, made on March 9, 1883, and now existing, is as follows:

Class 4, $1,800 and over per annum.
Class 3, $1,500 and less than $1,800 per annum.
Class 2, $800 and less than $1,400 per annum.
Class 1, less than $800 per annum.

The following was suggested in the fifth report as a suitable classification for this service and its adoption recommended:

It is ordered that all officers, clerks, carriers, and other employés at classified post-offices be, and they are hereby, arranged in the following classes:

Class 1, all persons receiving an annual salary of $800 or less, or a compensation at the rate of $800 or less per annum.

Class 2, all persons receiving an annual salary of $900 or less, but more than $800, or a compensation at the rate of $900 or less, but more than $800 per annum.

Class 3, all persons receiving an annual salary of $1,000 or less, but more than $900, or a compensation at the rate of $1,000 or less, but more than $900 per annum.

Class 4, all persons receiving an annual salary of $1,200 or less, but more than $1,000, or a compensation at the rate of $1,200 or less, but more than $1,000 por annum.

Class 5, all persons receiving an annual salary of $1,400 or less, but more than $1,200, or a compensation at the rate of $1,400 or less, but more than $1,200 per annum.

Class 6, all persons receiving an annual salary of $1,600 or less, but more than $1,400, or a compensation at the rate of $1,600 or less, but more than $1,400 per annum.

Class 7, all persons receiving an annual salary of $1,800 or less, but more than $1,600, or a compensation at the rate of $1,800 or less, but more than $1,600 per annum.

Class 8, all persons receiving an annual salary of $2,000 or less, but more than $1,800, or a compensation at the rate of $2,000 or less, but more than $1,800 per annum.

Class 9, all persons receiving an annual salary of more than $2,000, or a compensation at the rate of more than $2,000 per annum.

It is provided that no person who may be appointed to an office by and with the advice and consent of the Senate, and that no person who may be employed merely as a laborer or workman (not including any person designated as skilled laborer or workman), shall be considered as within this classification, and no person so employed shall, without examination under the civil-service rules, be assigned to the duties of a classified place.

It is also ordered that no person shall be admitted into any place not excepted from examination by the civil-service rules in any of the classes above designated until he shall have passed an appropriate examination prepared by the United States Civil Service Commission and his eligibility has been certified to by said commission or the appropriate board of examiners.

The *classified post-office service* embraces those post-offices at each of which there are as many as fifty employés, now (May 1, 1890) forty-five offices, as follows:

1. Albany, N. Y.
2. Atlanta, Ga.
3. Baltimore, Md.
4. Boston, Mass.
5. Brooklyn, N. Y.
6. Buffalo, N. Y.
7. Chicago, Ill.
8. Cincinnati, Ohio.
9. Cleveland, Ohio.
10. Columbus, Ohio.
11. Dallas, Tex.
12. Denver, Colo.
13. Des Moines, Iowa.
14. Detroit, Mich.
15. Grand Rapids, Mich.
16. Hartford, Conn.
17. Indianapolis, Ind.
18. Jersey City, N. J.
19. Kansas City, Mo.
20. Los Angeles, Cal.
21. Louisville, Ky.
22. Memphis, Tenn.
23. Milwaukee, Wis.
24. Minneapolis, Minn.
25. Nashville, Tenn.
26. Newark, N. J.
27. New Haven, Conn.
28. New Orleans, La.
29. New York, N. Y.
30. Oakland, Cal.
31. Omaha, Nebr.
32. Philadelphia, Pa.
33. Pittsburgh, Pa.
34. Portland, Me.
35. Providence, R. I.
36. Richmond, Va.
37. Rochester, N. Y.
38. St. Louis, Mo.
39. St. Paul, Minn.
40. Syracuse, N. Y.
41. San Francisco, Cal.
42. Toledo, Ohio.
43. Troy, N. Y.
44. Washington, D. C.
45. Worcester, Mass.

As stated in the foregoing classification of the postal service all officers, clerks, and employés in these several post-offices not appointed by the President, by and with the advice and consent of the Senate, and not employed merely as laborers or workmen, are in the classified postal service and subject to the provisions of the civil-service law and rules.

The *classified railway mail service* embraces all superintendents, assistant superintendents, chief clerks, railway postal clerks, route agents, local agents, mail-route messengers, and other employés of the railway mail service. One general superintendent, one assistant general superintendent, printers, employed as such; clerks employed exclusively as porters in handling mail matter in bulk, in sacks, or pouches, and not otherwise; and clerks employed exclusively on steam-boats, are exempt from examination. All other places can be filled only by promotion, transfer, re-instatement, or examination, as described in the civil-service rules. Superintendents of mails at classified post-offices (offices at which there are fifty or more employés) must be selected from among the employés of the railway mail service.

The numbers embraced in these four branches of the classified service are as follows:

The departmental service on June 30, 1888	8,212
The customs service on June 30, 1888	2,298
The postal service on December 2, 1889	12,966
The railway mail service on March 1, 1890	5,864
Total	29,340

CLASSIFICATIONS.

DEPARTMENTAL SERVICE.

The classification of each of the Departments is as follows, with the exception of those of the Post-Office and War Departments:

By direction of the President of the United States, and in accordance with the third clause of section 6 of the act entitled "An act to regulate and improve the civil service of the United States," approved January 16, 1883,

It is ordered, That the officers, clerks, and other employés of this Department be, and they are hereby, arranged in the following classes, viz:

Class A, all persons receiving an annual salary of less than $720, or a compensation at the rate of less than $720 per annum.

Class B, all persons receiving an annual salary of $720 or more, or a compensation at the rate of $720 or more, but less than $840 per annum.

Class C, all persons receiving an annual salary of $840 or more, or a compensation at the rate of $840 or more, but less than $900 per annum.

Class D, all persons receiving an annual salary of $900 or more, or a compensation at the rate of $900 or more, but less than $1,000 per annum.

Class E, all persons receiving an annual salary of $1,000 or more, or a compensation at the rate of $1,000 or more, but less than $1,200 per annum.

Class one, all persons receiving an annual salary of $1,200 or more, or a compensation at the rate of $1,200 or more, but less than $1,400 per annum.

Class two, all persons receiving an annual salary of $1,400 or more, or a compensat at the rate of $1,400 or more, but less than $1,600 per annum.

Class three, all persons receiving an annual salary of $1,600 or more, or a compen tion at the rate of $1,600 or more, but less than $1,800 per annum.

Class 4, all persons receiving an annual salary of $1,800 or more, or a compensatio the rate of $1,800 or more, but less than $2,000 per annum.

Class five, all persons receiving an annual salary of $2,000 or more, or a compensat at the rate of $2,000 or more per annum.

It is provided, That no person who may be appointed to an office by and with the vice and consent of the Senate, and that no person who may be employed merely a messenger, laborer, workman, or watchman (not including any person designated a skilled laborer or workman), shall be considered as within this classification, and person so employed shall, without examination under the civil-service rules, be signed to clerical duty.

It is also ordered, That no person shall be admitted into any place not excepted fr examination by the civil-service rules, in any of the classes above designated, until shall have passed an appropriate examination prepared by the United States Civil Ser Commission and his eligibility has been certified to this Department by said commissi

In the War Department, in the second paragraph, after the word "Department," added the words "including those employed in the offices of the several depot quar masters," and in the post-office classification, in the same place, are added the wo "including post-office inspectors and the agents and employés at postal-note, post stamp, postal-card, and envelope agencies."

U. S. CIVIL SERVICE COMMISSION.

EXECUTIVE MANSION,
Washington, D. C., March 1st, 188

In the exercise of authority vested in the President by the seventeen hundred fifty-third (1753rd) section of the Revised Statutes to prescribe such regulations for admission of persons into the civil service of the United States as may best promote efficiency thereof, and ascertain the fitness of each applicant in respect to age, hea character, knowledge, and ability for the branch of the service into which he seek enter, I hereby direct that the officers, clerks, and other employés of the United St Civil Service Commission, now authorized or that may hereafter be authorized by L shall be arranged in the following classes, viz:

Class A, including all persons receiving compensation at the rate of less than $1, per annum.

Class B, including all persons receiving compensation at the rate of $1,000 or m but less than $1,200 per annum.

Class one, including all persons receiving compensation at the rate of $1,200 or m but less than $1,400 per annum.

Class two, including all persons receiving compensation at the rate of $1,400 or m but less than $1,600 per annum.

Class three, including all persons receiving compensation at the rate of $1,600 or m but less than $1,800 per annum.

Class four, including all persons receiving compensation at the rate of $1,800 or m but less than $2,000 per annum.

Class five, including all persons receiving compensation at the rate of $2,000 or m per annum.

No person who is appointed to an office by the President by and with the advice consent of the Senate, or by the President alone, and no person who is to be emplo merely as a laborer or workman, or as a watchman, shall be considered as within classification.

And it is ordered, That the United States Civil Service Commission thus classified provided by clause 2 of Departmental Rule I of the civil-service rules approved Fe ary 2nd, 1888, and in force on and after the date hereof, shall be considered a part of classified departmental service, and the rules applicable thereto shall be in force ther

GROVER CLEVELAN

CUSTOMS SERVICE.

[Classification applicable to every customs district in which the number of officers, clerks, and other persons in the public service are as many as fifty. This classification took effect March 26, 1883.]

Class A, all persons, not employed merely as laborers or workmen, receiving a compensation amounting to $900 or more, but less than $1,200 per annum.

Class one, all persons receiving a compensation amounting to $1,200 or more, but less than $1,400 per annum.

Class two, all persons receiving a compensation amounting to $1,400 or more, but less than $1,600 per annum.

Class three, all persons receiving a compensation amounting to $1,600 or more, but less than $1,800 per annum.

Class four, all persons receiving a compensation amounting to $1,800 or more, but not including any officer confirmed by the Senate.

[This classification applies to the customs districts of the following-named cities: Baltimore, Md.; Boston, Mass.; Burlington, Vt.; Chicago, Ill.; Detroit, Mich.; New Orleans, La.; New York City, N. Y.; Philadelphia, Pa.; Port Huron, Mich.; Portland, Me.; San Francisco, Cal.]

POSTAL SERVICE.

Classification applicable to every post-office in which the number of officers, clerks, and other persons in the public service are as many as fifty. This classification took effect March 3, 1883.]

Class four, $1,800 and over per annum.

Class three, $1,400 and less than $1,800 per annum.

Class two, $900 and less than $1,400 per annum.

Class one, less than $800 per annum.

[This classification applies to the post-offices of the following-named cities: Albany, N. Y.; Atlanta, Ga.; Baltimore, Md.; Boston, Mass.; Brooklyn, N. Y.; Buffalo, N. Y.; Chicago, Ill.; Cincinnati, Ohio; Cleveland, Ohio; Columbus, Ohio; Dallas, Tex.; Denver, Colo.; Des Moines, Iowa; Detroit, Mich.; Grand Rapids, Mich.; Hartford, Conn.; Indianapolis, Ind.; Jersey City, N. J.; Kansas City, Mo.; Los Angeles, Cal.; Louisville, Ky.; Memphis, Tenn.; Milwaukee, Wis.; Minneapolis, Minn.; Nashville, Tenn.; Newark, N. J.; New Haven, Conn.; New Orleans, La.; New York City, N. Y.; Oakland, Cal.; Omaha, Nebr.; Philadelphia, Pa.; Pittsburgh, Pa.; Portland, Me.; Providence, R. I.; Richmond, Va.; Rochester, N. Y.; Saint Louis, Mo.; Saint Paul, Minn.; San Francisco, Cal.; Syracuse, N. Y.; Toledo, Ohio; Troy, N. Y.; Washington, D. C.; Worcester, Mass.]

RAILWAY MAIL SERVICE.

Order No. 218.] POST-OFFICE DEPARTMENT,
Washington, D. C., December 31, 1888.

1. By direction of the President of the United States, and subject to and in accordance with section 1 of an act entitled "An act to designate, classify, and fix the salaries of persons in the Railway Mail Service, approved July 31, 1882," and in accordance with the third clause of section 6 of an act entitled "An act to regulate and improve the civil service of the United States, approved January 16, 1883,"

It is ordered, That all superintendents, assistant superintendents, chief clerks, railway postal clerks, route agents, local agents, mail-route messengers, and other employés of the Railway Mail Service be, and they hereby are, arranged in the following classes:

Class one, all persons receiving an annual salary of $800 or less, or a compensation at the rate of $800 or less per annum.

Class two, all persons receiving an annual salary of $900 or less, but more than $800, or a compensation at the rate of $900 or less, but more than $800 per annum.

Class three, all persons receiving an annual salary of $1,000 or less, but more than $900, or a compensation at the rate of $1,000 or less, but more than $900 per annum.

Class four, all persons receiving an annual salary of $1,200 or less, but more than $1,000, or a compensation at the rate of $1,200 or less, but more than $1,000 per annum.

Class five, all persons receiving an annual salary of $1,400 or less, but more than $1,200, or a compensation at the rate of $1,400 or less, but more than $1,200 per annum.

Class six, all persons receiving an annual salary of $1,600 or less, but more than $1,400, or a compensation at the rate of $1,600 or less, but more than $1,400 per annum.

Class seven, all persons receiving an annual salary of $1,800 or less, but more than $1,600, or a compensation at the rate of $1,800 or less, but more than $1,600 per annum.

Class eight, all persons receiving an annual salary of $2,000 or less, but more than $1,800, or a compensation at the rate of $2,000 or less, but more than $1,800 per annum.

Class nine, all persons receiving an annual salary of more than $2,000, or a compensation at the rate of more than $2,000 per annum.

It is provided, That no person who may be appointed to an office by and with the advice and consent of the Senate, and that no person who may be employed merely as a laborer or workman (not including any person designated as skilled laborer or workman), shall be considered as within this classification; and no person so employed shall, without examination under the civil-service rules, be assigned to the duties of a classified place.

It is also ordered, That no person shall be admitted into any place not excepted from examination by the civil-service rules in any of the classes above designated until he shall have passed an appropriate examination prepared by the United States Civil Service Commission, and his eligibility has been certified to this Department by said Commission.

DON M. DICKINSON,
Postmaster-General.

PLACES AUTHORIZED TO BE FILLED BY NON-COMPETITIVE EXAMINATION UNDER GENERAL RULE III, SECTION 2, CLAUSE (E).

DEPARTMENTAL SERVICE.

1. In all the Departments: Engineers, assistant engineers, pressmen, and compositors.

2. In the Department of the Treasury:

In the office of the Secretary: Store-keeper, captain of watch, lieutenants of watch, and locksmith and electrician.

In the office of the Supervising Surgeon-General of Marine-Hospital Service: Hospital steward, employed as chemist.

3. In the Department of the Interior:

In the office of the Secretary: Stenographer (to be confidential clerk to Secretary), members of the boards of pension appeals, returns office clerk, and six clerks to act as assistant disbursing clerks.

In the Bureau of Pensions: Superintendent of buildings, and two qualified surgeons.

In the Patent Office: Librarian, principal examiners, machinist, and model attendants.

In the office of the Commissioner of Railroads: One book-keeper.

In the Bureau of Education: Clerk of class four as librarian.

In the Geological Survey: In permanent force, librarian and assistant photographer.

In temporary force, assistant photographers.

4. In the Department of Agriculture:

In the disbursing office: Four clerks.

5. In the Post-Office Department.

In the office of the Assistant Attorney-General: Stenographer (to be confidential clerk to the Assistant Attorney-General), captain of the watch.

6. In the Navy Department:
Assistants at branch hydrographic offices.
7. In the Department of Labor.
Special agents.

CUSTOMS SERVICE.

1. In the customs district of New York, collector's office:
The tellers employed in the cashier's office.
Three stenographers employed under the immediate supervision of the collector,
2. In the customs district of San Francisco:
Chinese interpreter.

In the *Postal Service* and the *Railway Mail Service* there are no places authorized to be filled by non-competitive examinations.

PLACES EXCEPTED FROM EXAMINATION BY DEPARTMENTAL RULE III, CLAUSE 2, AND BY SPECIAL DEPARTMENTAL RULE NO. I.

In all the Departments: Book-binders.

STATE DEPARTMENT.

The chief clerk of the Department.
The chiefs of the six following divisions: The diplomatic, consular, indexes and archives, statistics, rolls and library, translation.
One disbursing clerk, chief of the bureau of accounts, who gives bond.
One confidential clerk, who is stenographer to the Secretary of State.

[Under Special Departmental Rule No. 1.]

Lithographer.

TREASURY DEPARTMENT.

Secretary's office: One clerk to Secretary, two private secretaries to assistant secretaries, one chief clerk, ten chiefs of divisions, two disbursing clerks, one assistant superintendent.
Supervising Architect's office: Nine chiefs of division.
Secret Service office: One chief, one chief clerk; one clerk, class 4; one clerk, class 2; one clerk, class 1; one clerk, class $1,000; one attendant, ten operatives, twenty assistant operatives.
First Auditor's office: Four chiefs of division, one confidential clerk.
Second Auditor's office: Six chiefs of division, one disbursing clerk, one confidential clerk.
Third Auditor's office: Seven chiefs of division, one confidential clerk.
Fourth Auditor's office: Three chiefs of division, one confidential clerk.
Fifth Auditor's office: Three chiefs of division, one confidential clerk.
Sixth Auditor's office: One chief clerk, one disbursing clerk, ten chiefs of division, one confidential clerk.
First Comptroller's office: Four chiefs of division, one confidential clerk.
Second Comptroller's office: Seven chiefs of division, one confidential clerk.
Comptroller of the Currency: One deputy comptroller, four chiefs of division, one confidential clerk, one teller, one superintendent national currency division.
Commissioner of Customs: Two chiefs of division, one confidential clerk.
Internal Revenue: One deputy commissioner, seven chiefs of division, one confidential clerk.
Treasurer: One cashier, one assistant cashier, one chief clerk. one vault clerk, five chiefs of division, two tellers, two assistant tellers, one coin clerk, one superintendent

of national bank redemption agency, one teller (national bank redemption agency), one assistant teller (national bank redemption agency).

Register's office: Four chiefs of division, one confidential clerk.

Bureau of Statistics: One chief of bureau, one chief clerk.

Light-House Board: One chief clerk.

Life-Saving Service: One assistant superintendent, one confidential clerk.

Mint Bureau: One confidential clerk.

Steam-boat Inspection Service: One chief clerk.

[Under Special Departmentla Rule No. 1.]

In the Department of the Treasury:

In the office of the Secretary: Government actuary, inspector of furniture, custodian of dies, rolls, and plates at the Bureau of Engraving and Printing, two sub-custodians, keeper of the vault, distributer of stock, foreman of laborers, skilled laborers, elevator conductors, foreman of cabinet shop, and cabinet-makers.

In the office of the Comptroller of the Currency: Bond clerk.

In the office of the Supervising Architect: Supervising Architect, assistant, and chief clerk, confidential clerk to Supervising Architect, photograper, engineers and draughtsmen of classes one, two, three, four, and five, not exceeding ten in all: *Provided*, That these ten places shall cease to be excepted places from and after June 30, 1890.

In the Bureau of the Mint: Assayer, examiner, computer of bullion, and adjuster of accounts.

In the Bureau of Navigation: Clerk of class four, acting as deputy commissioner.

In the office of construction of standard weights and measures: Adjuster and mechanician.

In the Bureau of Engraving and Printing: Chief of the Bureau, assistant chief of Bureau, engravers, plate-printers, plate-cleaners, transferrers, harddeners, provers, pressmen, machinists, plumbers, carpenters, and blacksmiths.

In the Coast and Geodetic Survey: Superintendent, confidential clerk to superintendent, the normal or field force, assistant in charge of office and topography, general office assistant, confidential clerk to assistant in charge of office and topography, engravers and contract engravers, electrotypist and photographer, electrotypist's helper, apprentice to electrotypist and photographer, copper-plate printers, plate-printers, helpers, and mechanicians.

In the office of the Commissioner of Internal Revenue: Superintendent of Stamp vault.

In the Life-Saving Service: Topographer and hydrographer.

WAR DEPARTMENT.

Office of the Secretary of War: One chief clerk, one disbursing clerk, three chiefs of division, one private secretary or confidential clerk.

Office of the Adjutant-General: One chief clerk.

Office of the Judge-Advocate-General: One chief clerk.

Office of the Quartermaster-General: One chief clerk.

Office of the Commissary-General of Subsistence: One chief clerk.

Office of the Surgeon-General: One chief clerk.

Office of the Paymaster-General: One chief clerk.

Office of the Chief of Engineers: One chief clerk, one clerk, class three, who acts as disbursing clerk.

Office of the Chief of Ordnance: One chief clerk.

Office of the Chief Signal Officer: One clerk, class four, designated as chief clerk, one confidential clerk.

[Under Special Departmental Rule No. 1.]

Clerk for the General of the Army, and clerk for the retired General of the Army.

In the office of the Chief Signal Officer: Lithographer.

NAVY DEPARTMENT.

Chief clerk of the Navy Department.

Private secretary or confidential clerk to the Secretary of the Navy.

Disbursing clerk of the Navy Department.

Chief clerks of the Bureaus of Yards and Docks, Steam-Engineering, Navigation, Ordnance, Provisions and Clothing, Equipment and Recruiting, Construction and Repairs, Medicine and Surgery.

Chief clerk in the office of the Judge-Advocate-General.

[Under Special Departmental Rule No. 1.]

In the Hydrogaaphic Office: Engravers, copper-plate printers, printers, printers' apprentices.

DEPARTMENT OF THE INTERIOR.

Office of the Secretary: One private secretary to Secretary, one confidential clerk to First Assistant Secretary, one confidential clerk to Assistant Secretary, one disbursing clerk, one chief clerk of the Department, six chiefs of division (including one census clerk).

Pension Office: One confidential clerk to Commissioner, one chief clerk, twelve chiefs of division.

Patent Office: One confidential clerk to Commissioner, one chief clerk, three chiefs of division.

General Land Office: One confidential clerk to Commissioner, one chief clerk, nine clerks of class four, acting as chiefs of division.

Indian Affairs: One confidential clerk to Commissioner, one chief of division, three clerks of class four acting as chiefs of division, one financial clerk.

Office of Commissioner Railroads: One confidential clerk to Commissioner.

Office of Education: One confidential clerk to Commissioner, one chief clerk.

Geological Survey: Permanent force: one confidential clerk to Director, one chief disbursing officer, one chief clerk. Temporary force: three disbursing clerks.

[Special Departmental Rule No. 1.]

In the office of the Secretary: Superintendent of documents, clerk of class three as custodian, clerk to sign land patents, and telephone operator.

In the office of the Assistant Attorney-General: Law clerks: one at $2,750 per annum, one at $2,500 per annum, one at $2,250 per annum, and thirteen at $2,000 per annum.

In the Patent Office: Financial clerk, examiner of interferences, and law clerk.

In the General Land Office: Two law clerks, two law examiners, clerk of class four acting as receiving clerk, and ten principal examiners of land claims and contests.

In the Bureau of Pensions: Assistant chief clerk, medical referee, assistant medical referee, and law clerk.

In the Bureau of Indian Affairs: Principal book-keeper.

In the office of the Commissioner of Railroads: Railroad engineer.

In the Bureau of Education: Collector and compiler of statistics and statistician.

In the Geological Survey: General assistant, executive officer, chief photographer, editor, all scientific employés of the Geological Survey officially designated as follows: Chief geologist, geologist, assistant geologist, chief paleontologist, paleontologist, assistant paleontologist, chief chemist, chemist, assistant chemist, chief physicist, physicist, assistant physicist, chief geographer, geographer, assistant geographer, chief topographer, topographer, assistant topographer, chief hydrographer, hydrographer, assistant hydrographer, supervising engineer, engineer, assistant engineer, paleontological draughtsman, chief mechanician, mechanician, assistant mechanician.

POST-OFFICE DEPARTMENT.

One private secretary to the Postmaster-General, one private secretary to each of the three Assistant Postmasters-General, one disbursing clerk, who is also superintendent of the post-office buildings, one chief inspector, ten division inspectors, one chief clerk Post-Office Department, one chief clerk to each of the three Assistant Postmasters-General, one chief clerk money-order system, one chief clerk foreign mails, one chief clerk mail depredations division, one chief clerk dead-letter office, one superintendent of the money-order system, one superintendent of foreign mails, one topographer, one superintendent of the dead-letter office, one superintendent division of post-office supplies, one superintendent of free delivery, one superintendent of railway adjustments, one chief of salary and allowance division, one chief of appointment division, one chief of bond division, one chief of inspection division, one chief of mail-equipment division, one chief of division of postage-stamps, one chief of finance division, one chief of registration division, one chief of correspondence division.

[Under Special Departmental Rule No. 1.]

Assistant attorney-general, law clerk, and agents and employés at postal-note, postage-stamp, postal-card, and envelope agencies.

DEPARTMENT OF JUSTICE.

Two chief clerks (one in the office of the Solicitor of the Treasury), one disbursing clerk, two private secretaries (one in the office of the Solicitor of the Treasury).

[Under Special Departmental Rule No. 1.]

Assistant attorneys.

Pardon clerk and two law clerks.

DEPARTMENT OF AGRICULTURE.

One private secretary to the Secretary, two clerks in disbursing office, one disbursing officer, persons employed in the detective service of the Bureau of Animal Industry, one chief clerk of the Department, one chief clerk of the Bureau of Animal Industry, chiefs of division.

[Under Special Departmental Rule No. 1.]

In the office of the Secretary: Private secretary to the chief clerk, superintendent of grounds, and assistant chief of each of the following divisions: Of botany, of chemistry, of entomology, of forestry, and of statistics, and the director of experiment stations, the assistant director, and the private secretary to the director, superintendent of seed room, and superintendent of folding room.

In the Bureau of Animal Industry: Chief of the Bureau, assistant chief, private secretary to chief, and chief clerk.

Scientific or professional experts to be employed in investigations specially authorized by Congress, but not to include any persons regularly employed in that department, nor any person whose duties are not scientific or professional, and who are not expert in the particular line of scientific or professional inquiry in which they are to be employed.

DEPARTMENT OF LABOR.

One confidential clerk, one chief clerk, one disbursing clerk.

[Under Special Departmental Rule No. 1.]

Statistical experts and temporary experts.

[The places excepted from examination in the Railway Mail Service are defined in Railway Mail Rule II, section 5.]

[The places excepted from examination in the classified postal service are defined in Postal Rule II, section 5, and Special Postal Rule No. 1.]

CUSTOMS SERVICE.

Places excepted from examination at the several ports within the classified customs service, under section 5, Customs Rule II, and under Special Customs Rule No. 1.

BALTIMORE, MD.

Office of the collector: Two deputy collectors, one cashier, one auditor, one assistant cashier, one private secretary.

Office of the naval officer: One deputy naval officer.

Office of the surveyor: One deputy surveyor, one confidential clerk.

BOSTON, MASS.

Office of the collector: Three deputy collectors, one auditor and disbursing clerk, one cashier, one secretary and chief clerk, one assistant cashier.

Office of the naval officer: One deputy naval officer, one assistant deputy naval officer.

Office of the surveyor: One deputy surveyor.

Office of the appraiser: One confidential clerk (but one allowed).

CHICAGO, ILL.

Office of the collector: One cashier, one clerk and auditor, one confidential secretary.

DETROIT, MICH.

Officer of the collector: One cashier.

NEW ORLEANS.

Office of the collector: Two deputy collectors, one deputy collector and auditor, one clerk and cashier, one secretary and chief clerk, one assistant cashier and clerk.

Office of the naval officer: One deputy naval officer.

Office of the surveyor: One deputy surveyor.

NEW YORK.

Office of the collector: Nine deputy collectors, one deputy collector and secretary to civil-service board, one private secretary (only one allowed), one cashier, one acting disbursing agent, one auditor.

[Under Special Customs Rule No. 1.]

One book-binder.

Detectives employed exclusive as such.

Office of the naval officer: One deputy naval officer, one comptroller and acting deputy naval officer.

Office of the surveyor: One deputy surveyor, one private secretary.

Office of the appraiser: One private secretary.

Office of General appraiser: One confidential clerk, chief clerk, and law clerk.

PHILADELPHIA, PA.

Office of the collector: Two deputy collectors, one cashier and clerk, one assistant cashier (one allowed), one private secretary.

Office of the naval officer: One deputy naval officer.

Office of the surveyor: One deputy surveyor.

PORT HURON, MICH.

Office of the collector: Two deputy collectors, one deputy collector and cashier.

PORTLAND, ME.

Office of the collector: Two deputy collectors and cashiers, one deputy surveyor, one confidential secretary.

SAN FRANCISCO, CAL.

Office of the collector: One auditor, three deputy collectors, one clerk and cashier, one assistant cashier.

Office of the naval officer: One deputy naval officer.

Office of the surveyor: One deputy surveyor.

APPOINTMENTS UNDER GENERAL RULE III, SECTION 2, CLAUSE C, AND CLASSIFICATION.—SUGGESTIONS BY THE PRESIDENT.

EXECUTIVE MANSION,
Washington, March 21, 1888.

To the United States Civil-Service Commission:

GENTLEMEN: I desire to make a suggestion regarding sub-division (c) General Rule III of the Amended Civil-Service Rules promulgated February 2, 1888. It provides for the promotion of an employé in a Department who is below or outside of the classified service to a place within said classified service in the same Department, upon the request of the appointing officer, upon the recommendation of the commission and approval of the President, after a non-competitive examination, in case such person has served continuously for two years in the place from which it is proposed to promote him, and "because of his faithfulness and efficiency in the position occupied by him, and because of his qualifications for the place to which the appointing officer desires his promotion."

It has occurred to me that this provision must be executed with caution, to avoid the application of it to cases not intended and the undue relaxation of the general purposes and restrictions of the civil-service law.

Non-competitive examinations are the exceptions to the plan of the act, and the rules permitting the same should be strictly construed. The cases arising under the exception above recited should be very few, and when presented they should precisely meet all the requirements specified, and should be supported by facts which will develop the basis and reason of the application of the appointing officer, and which will commend them to the judgment of the commission and the President. The sole purpose of the provision is to benefit the public service, and it should never be permitted to operate as an evasion of the main feature of the law, which is competitive examinations.

As these cases will first be presented to the commission for recommendation, I have to request that you will formulate a plan by which their merits can be tested. This will naturally involve a statements of all the facts deemed necessary for the determina-

tion of such applications, including the kind of work which has been done by the person proposed for promotion, and the considerations upon which the allegations of the "faithfulness," "efficiency" and "qualifications" mentioned in the rule are predicated.

What has already been written naturally suggests another very important subject, to which I invite your attention.

The desirability of the rule which I have commented upon would be nearly, if not entirely, removed, and other difficulties which now embarrass the execution of the civil-service law would be obviated, if there was a better and uniform classification of the employés in the different Departments. The importance of this is entirely obvious. The present imperfect classifications, hastily made, apparently with but little care for uniformity, and promulgated after the late Presidential election and prior to the installation of the present administration, should not have been permitted to continue until this time.

It appears that in the War Department the employés were divided, on the 19th day of November, 1884, into eight classes and subclasses, embracing those earning annual salaries from nine hundred dollars to two thousand dollars.

The Navy Department was classified November 22, 1884, and its employés were divided into seven classes and subclasses, embracing those who received annual salaries from seven hundred and twenty dollars to eighteen hundred dollars.

In the Interior Department the classification was made on the 6th day of December, 1884. It consists of eight classes and subclasses and embraces employés receiving annual salaries from seven hundred and twenty dollars to two thousand dollars.

On the 2nd day of January, 1885, a classification of the employés in the Treasury Department was made, consisting of six classes and subclasses, including those earning annual salaries from nine hundred dollars to eighteen hundred dollars.

In the Post-Office Department the employés were classified on the 6th day of February, 1885, into nine classes and subclasses, embracing persons earning annual salaries from seven hundred and twenty dollars to two thousand dollars.

On the 12th day of December, 1884, the Bureau of Agriculture was classified in a manner different from all the other Departments and presenting features peculiar to itself.

It seems that the only classification in the Department of State and the Department of Justice is that provided for by section 163 of the Revised Statutes, which directs that the employés in the several Departments shall be divided into four classes. It appears that no more definite classification has been made in these Departments.

I wish the commission would revise these classifications and submit to me a plan which will as far as possible make them uniform and which will especially remedy the present condition which permits persons to enter a grade in the service in the one Department without any examination, which in another Department can only be entered after passing such examination. This, I think, should be done by extending the limits of the classified service rather than by contracting them.

GROVER CLEVELAND.

NUMBERS OF PERSONS BROUGHT INTO THE CLASSIFIED DEPARTMENTAL SERVICE ON JUNE 29, 1888, BY THE REVISION AND EXTENSION OF CLASSIFICATIONS.

Department of State	[illegible]25
Department of the Treasury	1,1[illegible]09
Department of War	[illegible]95
Department of the Navy	66
Department of the Interior	[illegible]19
Post-Office Department	95
Department of Justice	7
Department of Agriculture	[illegible]15
Total	[illegible]931

NOTES ON THE RULES.

GENERAL RULES.—DEPARTMENTAL, CUSTOMS, POSTAL, AND RAILWAY MAIL SERVICE.

1. AGE LIMITATION.

Begins with the filing of application paper. (Minutes June 4, 1888, clause 4, vol. 8, p. 18.)

2. APPEAL FROM MARKINGS, customs and postal service.

Inspection by competitor of his papers may take place in the presence of the secretary of the board, or of any other member when necessary, the competitor to make no copy of questions or answers and the Board to review no papers except on appeal made in writing. Ordinarily appeals should be made directly to the Commission, but the Board may review papers on appeal; and if errors in the markings are discovered may obtain consent of the Commission for their correction. It is not desirable that the board should hear oral statement or argument by appellants in support of their appeal. (Minutes April 24, 1888, clause 6, vol. 7, pp. 300-301.)

3. CERTIFICATIONS.

(a) More than three certifications of names may be made only where there are no eligibles who have not already been three times certified and where it is not possible to replenish the register in time to meet the needs of the service, and then only with the consent of the Commission. (Minutes May 10, 1888, clause 5, vol. 7, p. 359.)

(b) *From higher registers to fill lower places—customs and postal service.*—May only be made when the lower register is exhausted and it is not practicable to replenish it in time to meet the demands of the service, and then only with the consent of the competitors in writing. The approval by the Commission of any such proposed certification must first be obtained. The order of general average must be followed, omitting the names of those not willing to accept the lower place, and charging only those with certifications who have expressed willingness and whose names are certified. (Minutes September 27, 1888, clause 11, vol. 8, p. 446.)

(c) *Certification of preference claimants—departmental service.*—To be made without regard to apportionment. (Minutes September 17, 1886, clause 17, vol. 2, pp. 2, 3.)

4. CITIZENSHIP.

Only citizens may be examined. It is not enough that first papers have been issued. The Commission may inquire into the facts. (Minutes March 18, 1889; book H, p. 114.)

5. CLASSIFICATION, customs and postal service.

An office once subject to the examinations does not cease to be subject to them merely because the clerks and persons employed have been reduced below fifty. (Minutes May 14, 1888, vol 7, p. 370.)

6. DROPPING ELIGIBLE FROM THE REGISTER, customs and postal service.

It is competent for a board of examiners, without previous approval by the Commission, to drop from the register the name of any eligible upon proper written request of such eligible. The request should be kept on file. A withdrawal from the register which will evade the provisions of the rules forbidding a re-examination during the period of eligibility, without the consent of the Commission, must not, of course, be permitted. (Book A, p. 253.)

7. EXAMINATION.

(*a*) Examination so far as age limitations are concerned begins with the filing of the application. (Minutes June 4, 1888, clause 4, vol. 8, pp. 2, 3.)

(*b*) A person who has passed an examination may be again examined one year thereafter, although the term of eligibility has not expired, upon his filing a new application. The filing of a new application does not cancel eligibility, the examination for which it is filed not being a re-examination in the sense of Rule III, section 8, but a new examination on a new paper, the new eligible period not to begin until the old one expires. (Letter to Baltimore postal board, January 11, 1889, book M, p. 229.)

(*c*) *Entrance examination by those already in the service.*—The entrance examinations have for their object the testing of the qualifications of applicants for admission to the service, and therefore these examinations for any branch of the service are not open to persons already in the same branch. It is unnecessary and contrary to public policy to examine a person for a place for which he is already eligible by promotion or transfer. The apparent exception to this rule is that a person in the departmental service may be examined for a special register for that branch of the service. The rules do not prohibit a person serving in one branch of the service from applying for examination for admission to another branch, as, for instance, a person serving in a post-office from applying for admission to a custom-house. Clause 4 of General Rule III, however, prohibits a person from being an applicant for examination or an eligible for appointment in more than one branch of the service at the same time. (Minutes April 27, 1888, vol. 7, pp. 317, 318. Also April 6, 1888, p. 243.)

8. EXCEPTED PLACES.

(*a*) *Transfers from excepted to unexcepted places.*—Where a person has been appointed to an excepted place by promotion through the lower grades of the classified service, he may be transferred to an unexcepted place without examination, the requirement of an examination applying only to those appointed to excepted places from outside the classified service of the office in which they exist. (Book M, p. 20.)

(*b*) A person in an excepted place may, in addition to the duties of that place, if they do not occupy his whole time, perform such other duties as may be required of him. Such duties must be in addition to and not in lieu of the duties of the excepted place. (Minutes May 23, 1888, clause 4, vol. 7, pp. 405, 406.)

9. EXCESSIVE NUMBER OF APPLICANTS.

The Commission has no specific authority for dropping applicants merely because excessive numbers apply; but, assuming it to have the authority, it is deemed unwise to exercise it. (Minutes April 25, 1888, vol. 7, pp. 306, 307.)

10. OATH TO APPLICATIONS BEFORE A JUSTICE OF THE PEACE.

Board of examiners must use its best judgment, accepting papers where there is no apparent fraud or want of authority on the part of the officer before whom affidavit is taken. (Minutes July 26, 1888, clause 7, vol. 8, p. 225.)

11. PREFERENCE, SECTION 1754, REVISED STATUTES.

On March 3, 1865, Congress passed a joint resolution in two sections, which subsequently became sections 1754 and 1755, Revised Statutes, and which are as follows:

SEC. 1754. Persons honorably discharged from the military or naval service by reason of disability resulting from wounds or sickness incurred in the line of duty shall be preferred for appointments to civil offices, provided they are found to possess the business capacity necessary for the proper discharge of the duties of such office.

SECTION 1755. In grateful recognition of the services, sacrifices, and sufferings of persons honorably discharged from the military or naval service of the country by reason of wounds, disease, or the expiration of enlistment, it is respectfully recommended to bankers, manufacturers, mechanics, farmers, and persons engaged in industrial pursuits to give them the preference for appointments to remunerative situations and employments.

The intent of Congress in this legislation is perfectly evident, namely, first to give preference in civil appointments to those who were honorably discharged from the Army and Navy by reason of disability resulting from wounds or sickness incurred in

the line of duty, and who are found to possess the necessary business capacity; and, second, to recommend to the grateful recognition of persons engaged in industrial pursuits, etc., those honorably discharged from the Army or Navy by reason of wounds, disease, or the expiration of the term of enlistment. Both these provisions are in the same act, and as to civil office, the distinction is clearly drawn between those who were discharged for disability and those who were not so discharged; the former being given a preference, and the latter not. In forming rules under the civil-service law, the Civil Service Commission, without any additional legislation, would have been bound to take notice of and give effect to this statute, now section 1754, Revised Statutes; but Congress did not leave the Commission in any doubt on the subjects, section 7 of the civil-service law containing the following provision:

But nothing herein contained shall be construed to take from those honorably discharged from the military or naval service any preference conferred by the 1754th section of the Revised Statutes.

How has the Commission treated those whom Congress, by this legislation, say shall be preferred? It has released them from all maximum age limitations; has fixed the minimum grade of eligibility at sixty-five, while for all others it is seventy, and has provided that they shall be certified to appointing officers before all others of higher grade. The civil-service rules limit the preference to those whom Congress designated. Had the Civil Service Commission and the President in formulating rules given preference to other classes it would have been an assumption of legislative functions clearly not delegated to them and would have defeated the purpose of Congress to give preference in civil appointments to a certain limited class which is unmistakably described. It has long been painfully evident to the Commission that section 1754 is very inequitable in its operation, and the attention of Congress and the public has more than once been drawn to the matter, but as long as that section remains law the civil-service rules must give preference to those described in it and not to any others in the same way or sense. Congress alone can enlarge or abridge the class to which preference shall be given.

12. PROBATIONARY PERIOD.

The rules provide for a probationary service of six months, at the end of which period, if the conduct and capacity of the probationer are satisfactory to the appointing officer, absolute appointment must be made. During probation the character of the service rendered by the probationer and his fidelity and business capacity are to be carefully observed, as the question of permanent appointment depends upon them. The probation is a practical scrutiny continued through six months in the very work which the applicant is to do. After passing an examination it is to be presumed that the applicant is worthy of a six months' trial until the contrary is decisively proved. The appointing officer must evidently be the final judge of the qualifications of the persons whom he employs. An appointing officer can not extend the period of probation, but must at its close either absolutely appoint or else dismiss from the service, and the dismissal must be for the reason that the conduct and capacity of the probationer are not satisfactory. An appointment for a definite time succeeding the probationary period can not therefore be made, and any appointment at the expiration of the probationary period is held to be the absolute appointment required by the rules. If a further probationary appointment could be made the appointing officer might prolong indefinitely the probationary period, while the rules contemplate but one such period. (Letter to Boston Postmaster, March 29, 1890, Letter-book N, p. 320.)

13. RE-INSTATEMENT.

(*a*) *Persons separated from excepted places.*—A person occupying an excepted place at the time it became such, who has been separated therefrom without delinquency or misconduct, may be re-instated to any classified place in the same office without examination. A person appointed to an excepted place who has served therein one year or more and been separated therefrom without delinquency or misconduct may be re-instated to any classified place in the same office under the provisions of Rule

VII upon passing an examination for the place to which he is to be re-instated. If he served less than one year in the excepted place he can not be re-instated at all to a non-excepted place. Not only must the conditions of the rules as to re-instatement be complied with but also the conditions under which transfer may be made from excepted to unexcepted places. (Book K, p. 296.)

(*b*) The bar interposed by rules governing re-instatement against the re-instatement of those dismissed for misconduct is not removed at the end of one year, the language of the proviso of the rule which applies to those who may be re-instated after the expiration of one year being "subject to the other conditions of the rule," and one of said conditions is that the discharge or separation shall have been "without delinquency or misconduct." General Rule VI and Departmental Rule X are not in conflict. They both bar the re-appointment within one year of a person dismissed or separated from the service for misconduct, the one by denying him examination and the other by prohibiting the issuance of a certificate for re-appointment upon the requisition of the head of the department from which he was separated. Under General Rule VI the bar is removed at the end of one year, and the delinquent has thereafter the same right to compete for an appointment as other citizens who have not been in the civil service. Departmental Rule X perpetuates the bar against a privileged appointment by re-instatement, and construed together the rules mean that the delinquent shall not be restored to the service within one year after his separation therefrom by any process, and thereafter he shall have only the same rights as are possessed by those who have not been in the service. (Minutes November 7, 1889' clause 2, vol. 14.)

(*c*) Re-instatement cannot be made by revocation of order of dismissal. (Circular letter of Janury 23, 1888.)

(*d*) The appointing officer alone is the judge whether the removal was for delinquency or misconduct. Offense cannot be condoned. If new facts disprove charges upon which removal was made, certificate for re-instatement may be issued. In the case of a person unjustly removed for alleged delinquency or misconduct, the appointing officer must state directly, or in effect, that the person was not guilty of the offense charged; that from the investigation the appointing officer has made he is satisfied that the person was dismissed without delinquency or misconduct, as the rule requires. It is not the province of the Commission to consider evidence in such cases, and its certificate for re-instatement will be issued or withheld according as the Department shall conclude, upon investigation, that the dismissal was or was not without delinquency or misconduct. (Minutes March 31, 1888, clause 3, vol. 7, pp. 217, 218.)

14. REMOVALS.

(*a*) Entrance to the classified service is upon the merit of the applicant without regard to his political opinions or affiliations. An appointing officer who appoints or refuses to appoint an applicant because the applicant does or does not entertain certain political opinions, violates the law; and an appointing officer who removes an employé because that employé refuses to render political service, to be coerced in political action, or to contribute money for political purposes, also violates the law. Removals made for any other reason can not be investigated by the commission. (Minutes November 10, 1888, clause 1, vol. 9, pp. 33, 34.)

(*b*) Takes effect when the appointing officer confirms the recommendation of removal, reverting to the time of the suspension from work. (Minutes May 8, 1888, clause 6, vol. 7, p. 352; Book H, p. 468.)

15. TRANSFER.—Rule VIII, Clause 2.

16. TRANSFER FROM ONE REGISTER TO ANOTHER.—Customs and postal service.

Rule II provides what examinations shall be held for the customs and postal service; Rule III, clause 3 (*a*) and (*b*), provides that those who pass shall be "eligible to the class or place to test fitness for which the examination was held." Rule IV directs how certification shall be made, and subdivision (*b*) of clause 1 of that rule provides that when the appointing officer has requested a certification of the names

of either males or females to fill a vacant place, specified as in subdivision (*a*), the board of examiners, if the place to be filled is tested by competitive examination, shall certify the names of the three males or three females standing highest on the register from which certification is to be made * * * In view of these provisions of the rules the commission holds that a person eligible on any register for the customs and postal service can be certified only to the class or place for which he was examined. (Letter to Boston postmaster, October 19, 1889, Letter-book L, p. 109.)

DEPARTMENTAL SERVICE.

1. APPOINTMENT.

Dropping from one register when appointed from another.—(1) Any applicant who is on both a clerk (or copyist) and a supplementary register may be certified from either, and when appointed from one shall be dropped from or cease to be eligible upon the other.

(2) Any applicant who takes the basis examination (clerk or copyist) for the sole purpose of enabling him to take a supplementary examination, shall be certified from the supplementary register only.

(3) Any applicant who is on both a clerk (or copyist) and a supplementary register, and who declines an appointment upon certification from the clerk or copyist register on the ground that he desires to be appointed only to a place the qualifications for which are tested by the supplementary examination, shall not, by such declination, forfeit his right to certification from the supplementary register.

(4) Any applicant who is on both a clerk (or copyist) and a special register may be certified from either, and if appointed from the clerk or copyist register, shall remain eligible on the special register; but if appointed from a special register, shall be dropped from all other registers. (Minutes January 18, 1887, clause 1, vol 4, p. 54.)

2. APPORTIONMENT.

(*a*) Persons transferred from excepted to non-excepted places, persons appointed to places excepted under old Rule XIX and not excepted under new rules, where still serving in such places, and persons appointed by promotion into classified service under General Rule III, clause 2, (*c*). shall be charged to the apportionment. (Minutes June 4, 1888, clause 1, vol. 8, p. 17.) Also transfers from postal, customs, or railway mail to enter departmental service. (Minutes April 25, 1888, clause 2, vol. 7, p. 304.)

(*b*) Examination can not be allowed under General Rule III, paragraph 2, section (*e*), to nominees resident of a State that has received its full share of appointments unless it is impossible to provide the special skill that may be required by the examination of a person from a State that has not received its full share. (Minutes September 19, 1888, clause 6.)

(*c*) *Temporary appointment.*—Distinction between appointments for a temporary fixed period and appointments made on probation for six months under the rules to be followed by absolute appointment. Former not to be charged to apportionment, and name to be retained on the register for certification to any vacancy for which eligible. (Book M, p. 111. Letter to Secretary of Agriculture.)

3. CENSUS ACT OF MARCH 1, 1889.—Section 3.

A person transferred to the Census Office from an executive department does not lose the right of transfer to any other department. (Minutes November 6, 1889, clause 5½, vol. 12.)

4. CERTIFICATION FROM SPECIAL AND SUPPLEMENTARY REGISTERS.

To be without regard to salary. It is not the practice to reserve a name for a place of any particular grade, but eligibles are certified strictly in the order of vacancies for which special qualifications are needed without reference to salary. (Minutes April 5, 1888, clause 2 vol. 7, pp. 232-233.)

5. CLASSIFICATION.

(*a*) Messenger, laborer, workman, or watchman under classification of June 29, 1888, not to be assigned to clerical duty without examination. This was to prevent an abuse which was common in the public service, and to secure the assignment to the legitimate duties of their station all persons appointed to the subordinate places. The examination required before such assignment to clerical duty is held to be the regular competitive examination for securing a place on the eligible registers of the Commission, and the Commission would certify from those registers to fill a vacancy in any one of the higher grades upon the request of the head of a department who desired to appoint a person to such place with a view to his being assigned to clerical duty. [It is not enough that a person has passed an examination and is entered on an eligible register; he must have been certified in his order on the same basis with all others and appointed.] The order was not intended and is not to be construed to prevent the incidental performance of any duties which do not conflict with the legitimate duties of the position in which an employé is serving. (Circular letter to Departments, dated November 6, 1888.)

(*b*) Continuous service of a person brought within the classified service, in a place subject to examination, by the revision and extension of the classification, shall be counted as having been rendered in the classified service. (Minutes July 23, 1888, clause 1, vol. 8, p. 209.)

6. DEPARTMENT TO REPORT APPOINTMENTS, ETC.

Department to report all appointments to and separations from the classified service, however made; and all changes of status or grade within the classified service. (Minutes April 10, 1888, clause 4, vol. 7, p. 253.)

7. ELIGIBILITY.

Under supplementary or special examination the term of eligibility is two years from the date of entry on the eligible register. Eligible who has received maximum number of certifications may be re-examined after one year from the date of the examination upon filing a new application. (Minutes March 3, 1888, clause 10, vol. 7, pp. 138-139).

8. EXAMINATIONS.

The copyist and clerk examinations for the departmental service have for their object the testing of the qualifications of applicants for admission to that service; therefore, these examinations are not open to persons already in the classified departmental service, and no persons who are in such service can be examined for, or be held eligible on any except the special and supplementary registers. To examine persons for positions which they already hold would be unnecessary and contrary to public policy. (Minutes April 23, 1888, clause 10, vol. 7, p. 296.)

9. FEMALE CLERK EXAMINATION.

Ordered, That when requests are made for the certification of female eligibles who have passed the clerk examination, certification shall be made of the three highest on the female clerk registers, including all the States and Territories excepting those which may have at the time the request is made received more than 50 per cent. of all their quota. Upon a selection being made from any such certificate the selection shall be charged against the general apportionment of appointments of that State. (Minutes June 28, 1888, clause 3, vol. 8, p. 116.)

10. PRINTERS' ASSISTANTS.

Examination was not intended to and does not test the educational qualifications needed in the clerk and copyist grades, but was intended to test only that measure of general intelligence requisite for the positions of printers' assistants or other positions of like character. Not proper for transfer to be made to clerical position. (Letter to the Secretary of the Treasury, June 8, 1889.)

11. PROBATION.

Entrance to classified service through non-competitive examination to be upon probational appointment. (Book M, p. 23.)

12. PROMOTION.

(*a*) *Copyist to clerk.*—Persons brought within the classified service subject to examination may be promoted at any time, in the discretion of the promoting officer, upon any test of fitness determined upon by him, to any place the salary of which is not more than $900 per annum. Such person may be promoted at any time after one year's continuous service in the classified service upon the certificate of the commission that he has passed the clerk examination or its equivalent to any place the salary of which is $1,000 per annum or more, and at any time after two years' continuous service in the classified service to any place the salary of which is $1,000 or more (except in the War Department, to which promotion regulations have been applied) without examination by the commission. (Minutes July 23, 1888, clause 2, vol. 8, p. 210.)

(*b*) If appointed under any supplementary examination, it is the equivalent of the clerk, and promotion may be made at any time after probationary appointment without further examination. An applicant takes no benefit from the fact that he has passed the supplementary examination if not appointed under it, such examination becoming dead upon appointment from the copyist register. (Minutes March 24, 1888, clause 5, vol. 7, pp. 193–196; also Fourth Report, p. 262, note; and letter to Carré, 1886.)

(*c*) No examination to be held for such promotion until certificate of eligibility is requested by the head of the department. (Minutes August 21, 1888, clause 1.)

(*d*) Service at post-office before it became classified to be counted in satisfaction of the requirement of two years' service for promotion from copyist to clerk grade under departmental Rule IX, clause 1 (*c*), upon transfer to departmental service. (Minutes April 3, 1889, clause 4, vol. 11.)

(*e*) *Into the classified service, general Rule III, section 2, clause c.*—Department must state (1) that the person whose promotion is desired has in the unclassified place occupied by him been faithful and efficient, and to give in this connection copies of any reports or record of his faithfulness and efficiency which may have been kept by the officer under whose immediate supervision he has been serving, and (2) that such person has all the necessary qualifications for the place to which his promotion is proposed; that these qualifications have been practically tested in the performance of the duties of the place to be filled by the proposed promotion, and that such promotion would add to the efficiency of the service and promote the public interests more than would an appointment from the eligible registers of the commission of a person unfamiliar with the work of the department and with the particular duties of the place to be filled. (Minutes May 29, 1888, clause 1, vol. 7, pp. 428, 429.) See also letter of President, Fifth Report, p. 104, and reply of commission March 30, 1888. Such promotions to be charged to apportionment. (Minutes June 4, 1888, clause 1.) Caution to be exercised. (Minutes December 6, 1888, clause 2; December 4, 1888, clause 3.)

13. PROMOTION REGULATIONS, WAR DEPARTMENT.

(*a*) Paragraph 2, clause 3, section 2, and the third paragraph of the same clause and section, entitle persons appointed from the clerk register to a place giving an annual salary of $1,000 or less to promotion during probation or after absolute appointment to class 1, in the discretion of the Secretary of War. And as under the provision last quoted any person who is in the classified departmental service in a place below class 1, by reason of any classification, but who was not appointed upon examination and certification by the commission, is entitled to the same right of promotion to class 1 and of competition for promotion to class 2 as a person appointed from the clerk register of the commission to a class below class 1, promotion may be made of a person in the classified service by reason of a classification of the War Department to the $1,000 class without further examination. (Minutes, December 7, 1888, clause 4, vol. 9, pp. 115-117.)

(*b*) *General Rule III, clause* 6.—Any honorably discharged soldier, or sa widow, or orphan of deceased soldier or sailor, serving in the War Departi the customs district of New York, can not be required to enter examination motion. No such person can be promoted without first passing the promot amination to which other persons in that department and district are comp subjected. (Minutes, April 10, 1888, clause 1, vol. 7, pp. 249-250.)

(*c*) (*Section* 2, *clause* 7) *Special class.*—Examinations for vacancies in the class limited to those applying from the outside for admission to the service; persons in the department may be examined by way of promotion unless t thereof makes request in writing that a promotion examination be held. Un tion 3 no one can compete by way of promotion to the special class who is in below the $1,000 class. (Minutes, October 30, 1888, clause 12.)

14. TRANSFERS.—Rule VIII, section 1, clause (*b*).

(*a*) A person who is transferred from a classified customs district to a bu the Treasury Department in which business relating to the customs is transa not be transferred to a bureau in which business relating to the customs is n acted. (Letter to Secretary of the Treasury, letter-book M, p. 237.)

(*b*) Person brought within the classified service subject to examination by vision and extension of the classification may be transferred under Depar Rule VIII upon the certificate of the commission that he has passed an exan to test fitness for the place to which he is to be transferred, and has been du least six months preceding the date of the certificate in the classified servic department from which transfer is to be made to any place the salary of whic more than $900 per annum; and to any place the salary of which is $1,000 per or more upon the certificate of the commission that he has passed an examin test fitness for the place to which he is to be transferred, and has been du least one year in the classified service of the department from which the trans be made. (Minutes, July 23, 1888, clause 1, vol. 8, p. 210.)

(*c*) A person may not be transferred to a department under the rules for tr not eligible under the age limitation for entrance examinations. (Minutes, 1889, clause 3, vol. 11.)

15. TYPE WRITERS.

Applicant for examination in type-writing may be examined upon whate of machine he elects, and, upon request from the head of a department f who are operators of a particular kind of machine, certification shall be mad cordance with the request. (Minutes, September 23, 1887, clause 13, vol. 6, p

CLASSIFIED CUSTOMS SERVICE.

1. APPOINTMENT.—Customs Rule IV, clause 1.

"Lowest class or grade" means lowest class in a grade for which an entr amination is provided. (Minutes, May 21, 1888, clause 2, vol. 7, p. 397.)

2. CLASSIFICATION.—(See classification of the customs service.)

(*a*) Temporary assistant weighers at the port of New York are classified pl excepted from examination. No person can legally be temporarily appointe classified place without examination and certification. (Minutes of August clause 12, vol. 6, p. 15.)

(*b*) *Inspectors to be appointed for emergency at reduced compensation.*—While ment may be made to a place the compensation of which is less than $900 pe without examination and certification, the commission thinks it would be appoint to such places by examination and certification in the regular way. not then be necessary to make them temporarily for an emergency, and the sation could be increased to the usual rate without any question arising right to do so under the civil service rules. (Minutes, May 2, 1888, clause 1 pp. 332-333.)

) 1 (e). (Minutes May 21, 1888, vol. 7, pp. 397, 399. And see "Promotion (e)"

)MOTION—Customs Rule V.

No part of Rule V applies to the district of New York, promotion regulations g been applied to that district. Clause D of that rule which authorizes the ıtion of a messenger, after passing the clerk examination, to the lowest class in ·ade of clerk in any customs district to which promotion regulations have not ıpplied, applies only to those messengers who are in the classified customs serv- · reason of the fact that their compensation is $900 per annum or over, but it ıot authorize the promotion into the classified service of those messengers whose ısation is less than $900 per annum, and who are for that reason outside of elow the classification. (Minutes March 19, 1888, clause 1, vol. 7, pp. 173, 174.)

The nominating officer is not the promoting officer contemplated by section 2, V. The Secretary of the Treasury is. But the approval by the Secretary of st applied by the nominating officer makes that test the test required by clause l justifies the promotion upon the nomination made. (Minutes August 3, 1888,) 1, vol. 8, pp. 260, 261.)

The object and effect of Rule V, subdivision (a) of clause 1, is to require that ıtion of clerks shall be made from grade to grade. A person may not, there- ›e promoted from class 1 to class 4. (Book L, p. 374.)

Tests of fitness to be determined upon by the nominating officer need not be vised by the board of examiners. The test provided for by Rule V is in the e of an examination to test fitness for the particular place to be filled. (Min- une 4, 1888, clause 16, vol. 8, p. 24.)

Promotion of assistant weigher to day inspector may be made under Customs Rule use 2, in the discretion of the promoting officer, upon any test of fitness determined by him. The commission thinks that the proper test would be the day inspect- ımination, as the examination for assistant weigher is much easier than that y inspector. Under clause 1 promotion may not be made until after absolute ıtment at the expiration of the probational period of six months.

Increase of compensation under promotion regulations may be made without r examination where persons have been practically tested in the duties of their

provided for the two classes. (Letter to the Secretary of the Treasury, February 16, 1887.)

(*b*) Store-keepers now classed as clerks of class 2, with compensation of $1,400 per annum, may be transferred without examination to inspectors' positions, which are in the same class, compensation being $4 per diem, as the clerk examination, which store-keepers are required to take, is of a higher grade than that to which inspectors are subjected, and as the two positions are in the same class relatively as to compensation, subject to the provisions of section 2, Customs Rule VI, and Promotion Regulation IV of the New York custom regulations. (Letter-book I, p. 123.)

(*c*) An honorably discharged soldier or sailor or widow or orphan of deceased soldier or sailor serving in the customs district of New York can not be required to enter examination for promotion. No such person can be promoted without first passing the promotion examination to which other persons in that district are compulsorily subjected. (Minutes, April 10, 1888, clause 1, vol. 7, pp. 249, 250.)

(*d*) Any change of grade, position, or designation for which examination and certification, by the board of examiners, are required, is a promotion in the contemplation of the regulations; and no such change can properly or legally be made without such examination and certification. Case of McGay (letter to Secretary of the Treasury April 3, 1890).

6. RESIDENCE.

Statute requiring an inspector to reside in a place where duties are to be performed. Certification made in strict accordance with the rules not in contravention of the statute. The statute does not require that the applicant shall reside at a certain place, but only that the inspector shall reside there. Conforms to practice of the Treasury Department. (Book I.)

7. TRANSFERS—Rule VI, section 1, clause (*c*).

A person who is transferred from a classified customs district to a bureau of the Treasury Department in which business relating to the customs is transacted can not be transferred to a bureau in which business relating to the customs is not transacted. (Letter-book M, p. 237, letter to Secretary of the Treasury.)

IV. CLASSIFIED POSTAL SERVICE.

1. AGE LIMITATIONS—Postal Rule II, clause 2.

The maximum limits for carrier, messenger, stamper, and junior clerk do not apply to those allowed preference under section 1754, Rev. Stat.

2. CLASSIFICATION—Act, sections 6 and 7, and Postal Rule I.

(*a*) The classification of those in the post-offices to which the act extends was made into four classes by the Postmaster-General on April 4, 1883. The highest class embraces those who receive an annual compensation of $1,800 or over, and the lowest those who receive a compensation of $800 or less, but the latter is held by the commission to include no person employed merely as a laborer or workman. Section 7 of the act declares that "no person employed merely as a laborer or workman (shall) be required to be classified hereunder." The classified service does not include any employés not classified in conformity with the act, whatever the duties or positions of such employés and laborers and workmen are therefore not within the classified postal service. (See letter to the Chicago postmaster of March 12, 1888, Book H, p. 279.)

(*b*) All clerks or persons employed or in the public service at any post-office or under any postmaster, no matter what their grade or position, are to be counted in determining whether an office has reached as many as fifty employés within the meaning of the act, section 6, and Postal Rule I. (See also Postal Laws and Regulations, section 665.) But section 7 of the act provides that those employed merely as laborers or workmen shall not be required to be included in this classification, which is a classification of employés for the purpose of examination. (Letter to postmaster at Nashville, Tenn., October 11, 1889, Book L, p. 65.)

(c) Messenger not to be engaged in the handling of mails, but with duties strictly of messenger is not within the class of places intended by the law to be filled by competitive examination. (Book L, p. 452.)

(d) Watchmen are not, strictly speaking, workmen or laborers, and therefore are not outside of the classified service. They are positions of some responsibility, and should be filled by persons of such character and intelligence as is guarantied by the messenger examination. (Minutes May 23, 1888, clause 4, vol. 7, p. 406.)

3. ENTRANCE EXAMINATIONS—Postal Rule II, clause 2.

Where a person is in the classified service and his advancement by promotion discretionary with the postmaster, subject only to the conditions and limitations of the civil service rules, the commission thinks it would be contrary to public policy and the principles of good administration to admit him to an entrance examination with a view to original appointment in a higher grade. (Letter to Leopold Hindenlang, February 13, 1890, Book M, p. 447.)

4. PROMOTIONS AND TRANSFERS—Postal Rule 5.

(a) Postmaster may make distribution of his force by promotion, transfer, or reduction, upon any test of fitness determined upon by him which the commission does not disapprove, in the absence of promotion regulations. This discretion of course would not permit the promotion of a person to a grade requiring a higher examination where he was only appointed to a lower grade for the purpose of promotion, as such promotion would obviously break down the distinction between the examinations. Where a person has been appointed in good faith to a lower grade, and in the performance of his duties has been faithful and efficient, showing all the necessary qualifications for the place to which his transfer or promotion is proposed, and those qualifications have been practically tested, and where such promotion would add to the efficiency of the service and promote the public interest more than would an appointment from the eligible registers of a person unfamiliar with the work of the office or with the particular duties of the place to be filled, the promotion would be strictly within the spirit and letter of the rule. Whether a transfer to a place of carrier is to enter the service within the meaning of the act of August 2, 1882, Statutes, 185, requiring entrance to the class having the minimum rate of pay, is not a question for decision by the commission. Regard must be had to the age limitations prescribed by Postal Rule II, clause 2, but no promotion or transfer (except appointment of substitutes to regular places) may be made from one grade to another until after absolute appointment. (Letter to postmaster at Boston, July 31, 1888, and minutes June 4, 1888, clause 5.)

(b) Where substitutes are employed, regular places must be filled from the substitutes in the order of their entrance to the service as substitutes. (Minutes May 18, 1888, clause 3; July 7, 1888, clause 1; August 14, 1888, clause 2.)

(c) Watchman being within the classified service may be promoted to clerk upon a test of fitness determined by the postmaster. (Minutes April 10, 1888, clause 3, vol. 7, p. 250.)

5. SELECTIONS FOR APPOINTMENT.

When name is certified and all available means employed to find the person without success, the appointing officer has discharged his full duty, and has a right to a further certification.

6. SUBSTITUTES—Postal Rule IV, clause 2.

Probationary appointment begins with appointment to substitute place, and promotion may be made to regular place in that order before expiration of probationary period. (Letter to St. Paul postal board, November 23, 1889, book L, p. 360.)

7. TRANSFERS—Postal Rule VI, clause (b).

(a) Transfers under this rule may not be made to office of Sixth Auditor, Treasury. (Minutes November 3, 1888, clause 1.)

(b) Departmental age limitation applies in transfers to the Post-Office Department. (Minutes April 3, 1889, clause 3.)

CLASSIFIED RAILWAY MAIL SERVICE.

1. CERTIFICATION OF PREFERENCE CLAIMANTS.

The provisions of Railway Mail Rlue IV, providing for certifications by counties, shall not apply to the certification of preference claimants, who shall as heretofore be certified by States. (Minutes November 30, 1885, clause 5.)

OPINIONS OF ATTORNEYS-GENERAL.

Interpretation of the word "family," in section 9 of the civil service act.

DEPARTMENT OF JUSTICE,
Washington, June 12, 1883.

The PRESIDENT:

SIR: The communication addressed to you upon the 5th instant by the Civil Service Commission asks for an interpretation of the word "family," in section 9 of the civil service act of January 16, 1883; and in the same connection, whether that commission should proceed with the *examinations* provided for by that act, irrespective of the provision in section 9, leaving the administration of that provision to the appointing power alone.

Upon consideration, it seems to me that the question whether there are already two or more members of a family in the public service, etc., as provided in section 9 of the civil service act of January 16, 1883, is not to be considered by the commission, but by whatever power may be called upon subsequently to pass upon *eligibility to appointment.*

The disability in question is a fluctuating one, material only as regards "appointment." The state of things which creates it may exist at examination and disappear before appointment, or, *vice versa*, be non-existent at examination and yet have arisen at appointment.

The statute makes provision for examinations not only where vacancies exist, and appointments are sought, but also for prospective vacancies—*i. e.*, as it were, for a *fund* upon which in future exigencies the appointing power may *draw*. Probably the latter will come to be a considerable, if not the more considerable, part of this function. Contingencies, therefore, like that in question, which do not continue in one stay, and the status of which at one time affords no presumption even (at least none that is legal) as to its status at another, are intended to await the event in connection with which they are mentioned, viz, the appointment.

The circumstances that the formal provision made by the statute as regards the *residence*—disability created therein—differs so much from that under consideration, both in expressly assigning to the commission an incidental duty and in requiring information thereabouts to be given to it under oath, points in the same direction.

This view, of course, renders it unnecessary to consider the meaning of the word "family."

Very respectfully, your obedient servant,

BENJAMIN HARRIS BREWSTER,
Attorney-General.

cts of March 3, 1853, chapter 97, and March 3, 1855, chapter 175, the per-
erical force in each of the Executive Departments was required to be ar-
o four classes (designated class 1, class 2, etc.), for each of which classes a
ate of compensation was prescribed. The annual salaries, originally estab-
the act of 1853,) were $900, $1,200, $1,500, and $1,800 for clerks of the first,
ird, and fourth classes, respectively; but by the act of April 22, 1854, the
f clerks of the first, second, and third classes were fixed at $1,200, $1,400,
0, the compensation of clerks of the fourth class remaining unchanged.
ification, with the salaries for each class respectively as above, has been
ed in the Revised Statutes, (sections 163 and 167).
ce the adoption of that classification, which at first embraced the entire
force of the several Departments, excepting the chief clerks of the Depart-
d of bureaus or offices therein and clerks temporarily employed, Congress
time to time, as the exigencies of the public service required, not only in-
that force by providing for additional clerkships of the several *classes* above
but by providing for the employment of clerks who can not (according to the
the statutes authorizing their employment) be deemed to fall within either of
ses mentioned—some at salaries above the highest, others at salaries below the
compensation allowed for any of those classes. These clerks, so to speak, are
ified, and in this category are the $1,000 and the $900 clerkships under consid-

ugh the clerkships just adverted to do not belong to either of the classes enu-
d in section 163, Rev. Stat., they nevertheless come within the scope of the
January 16, 1883, entitled "An act to regulate and improve the civil service of
ited States," and may be classified thereunder for the purpose of the examina-
applicants contemplated thereby into one or more classes distinct from those
rated as aforesaid, should this be thought expedient.
classification called for by that act, as a correlative of the requirement that
ness of applicants for positions in the civil service shall be tested by examina-
not restricted to that prescribed by section 163, Rev. Stat., but one commen-
with the purposes of the act is authorized. Thus the second section of the act
es that among the things to be provided for in the rules to be adopted by the

exist, or be allowed to all of them, as in the judgment of the President will best promote the efficiency of the service.

The remaining inquiry is whether promotions from the $900 or $1,000 clerkships to the $1,200 clerkships are to be made without examination. When, in 1853, the clerical force in the Departments was classified, it was provided that no clerk should be appointed in either of the four classes then established until after he was examined and found qualified by a board of three examiners. This requirement (which was re-enacted in section 164, Rev. Stat.) applied as well to cases of promotion as to cases of original appointment in the service. Whilst the provision referred to has been superseded by the civil service act of 1883, the latter preserves the requirement of an examination (to be made under its provisions) in order to be *promoted* to any class as well as to enter therein by an original appointment. Thus section 7 provides that "after the expiration of six months from the passage of this act no officer or clerk shall be appointed, and no person shall be employed to enter or be promoted in either of the said classes now existing, or that may be arranged hereunder pursuant to said rules, until he has passed an examination, or is shown to be specially exempted from such examination in conformity herewith."

Assuming, then, that the $900 or $1,000 clerkships are constituted a distinct class, it is plain that this provision forbids a promotion from such class to another class (*e. g.*, to the class of $1,200 clerkships) without examination, unless the person to be promoted is, in conformity with the act, especially exempted from such examination. The general rule, to be deduced from the provision, I take to be this: that to be eligible for appointment to any class (whether by way of promotion or otherwise) the applicant must have passed an examination for the purpose of testing his fitness for the place.

I have the honor to be, your obedient servant,

BENJAMIN HARRIS BREWSTER,
Attorney-General.

Preference in appointment, section 1754, R. S.

POST-OFFICE DEPARTMENT,
OFFICE OF THE ASSISTANT ATTORNEY-GENERAL,
Washington, D. C., May 18, 1889.

SIR: Replying to your favor of the 14th instant regarding the construction of section 1754, Revised Statutes of the United States, which reads as follows:

"Persons honorably discharged from the military or naval service by reason of disability resulting from wounds or sickness incurred in the line of duty shall be preferred for appointments to civil offices, provided they are found to possess the business capacity necessary for the proper discharge of the duties of such offices."

And further replying to your interrogatory whether "In such cases it is *obligatory* upon the Department to select the applicant claiming preference under the statute in question? If so it would appear to be unnecessary for the Civil Service Commission to certify three names, since the Department would have no choice in the premises," I respectfully submit that in construing the words of this act, which are "shall be preferred," such an imperative meaning is contained in the language used that I am constrained to hold the terms equivalent to "must be preferred."

In *ex parte* Jordan (94 U. S., 251), in construing almost similar statutory language, the court says:

"The language of the statute is '*shall* be allowed,' which means 'must be allowed' when asked for by one who stands in such a relation to the cause that he can demand it."

The intendment of the law clearly is to favor persons honorably discharged from the "military or naval service, provided they are found to possess the business capacity necessary for the proper discharge of the duties of such office."

these names to be those of the eligibles who, standing higher in grade than any other three eligibles of the same sex on the list of eligibles from which certification is to be made, have not been certified three times to the officer making the requisition: *Provided*, That if upon any register from which certification is to be made there are the names of eligibles who have, under section 1754 of the Revised Statutes, claim of preference in civil appointments, the names of such eligibles shall be certified before the names of other eligibles higher in grade. The commission shall make regulations that will secure to each of such preference-claiming eligibles in the order of his grade among other preference claimants, an opportunity to have his claim of preference considered and determined by the appointing officer."

I would construe the intention of the act requiring the certifying of three names, be based upon a policy aimed to aid the Department in promptly selecting a competent class of "eligibles" for the required service. Doubtless the Commissioners ok into consideration in framing this rule the consideration that in certifying but "eligible" that person might become incapacitated and fail to appear when ified, or decline, or for many reasons that could be suggested become ineligible to place. Here we see the advantage of the additional names presented, that on the ure of the person selected to qualify for the position, a second and even third ction can be made from the certified list.

Very respectfully,

JAMES N. TYNER,
Assistant Attorney-General, Post-Office Department.

V. B. COOLEY, Esq.,
Acting Chief Clerk Post-Office Department.

DEPARTMENT OF JUSTICE,
Washington, May 24, 1889.

IR: Your note of May 21, inclosing the opinion of the Assistant Attorney-General the Post-Office Department, as to the construction of section 1754 of the Revised tutes of the United States, and asking my opinon upon the question whether that tion is mandatory or not, is received.

When appointment in the Railway Mail Service takes effect.

DEPARTMENT OF JUSTICE,
Washington, October 14, 18

The PRESIDENT:

SIR: I have the honor to acknowledge the receipt of your request for an opi from this Department upon a question submitted by the honorable the Civil Ser Commissioners, Theodore Roosevelt and Hugh S. Thompson, under date of Sep ber 24, 1889.

The letter of the Commissioners, and the letter inclosed therewith of the Ger Superintendent of the Railway Mail Service to the Hon. John Wanamaker, I master-General, dated July 9, 1889, present the following facts:

On April 29, 1889, one J. M. Taylor was appointed a railway postal clerk. Superintendent's letter asserts—and the facts thus asserted seem to be accepte the Commissioners—that his "appointment was made in the usual way upon A 29, 1889, and upon that day the appointment papers were regularly made up, *exec* and *recorded*, and, as is customary, were at once forwarded to the Superintenden the fifth division, and notice as well *given Taylor*. There was nothing unusua the method observed in the making out of the appointment papers, neither was th anything out of the usual course in connection with the forwarding of the appo ment and the notice to the appointee." This appointment was approved by the nature of the First Assistant Postmaster-General on April 29. Taylor, however, not take the oath of office until May 18, 1889.

It so happens that on March 11, 1889, the President issued the following order:

"Whereas civil service rules for the Railway Mail Service were approved Janu 4, 1889, to go into effect March 15, 1889; and

"Whereas it is represented to me by the Civil Service Commission, in a commun tion of this date, that it will be impossible to complete arrangements for put such rules into full effect on said date, or sooner than May 1, 1889: It is therefore

"*Ordered*, That said railway mail rules shall *take effect May* 1, 1889, instead of M 15, 1889; provided that such rules shall become operative and take effect in State or Territory as soon as an eligible register for such State or Territory shal prepared, if it shall be prior to the date above fixed."

My attention is also called to section 7 of the civil service act of January 16, 1 and general rule 3, section 1.

Upon this state of facts, the question is asked whether Mr. Taylor was legally pointed on April 29, so that his examination under the civil service rules is no quired, or whether the time of taking the oath of office and entrance upon du decisive as to the requirement of an examination.

It will be noticed that said section 7, and said general rule 3, did not "effect" until May 1, 1889, under the terms of the President's order of March 11,

The law as to Taylor's appointment in force down to May 1, 1889, was sec 4025, Revised Statutes, which reads:

"The *Postmaster-General* may *appoint* clerks for the purpose of assorting and tributing the mail in railway post-offices, each of whom shall be paid, out of the propriation for transportation of the mail, a salary at the rate of not more than thousand four hundred dollars a year each to the head clerks, nor more than thousand two hundred dollars a year each to the other clerks."

Under this section the Postmaster-General had the right on April 29 to app Taylor in the way he was appointed. His appointment at the time it was was, therefore, in every sense legal and valid; and it only remains to see wh the mere fact that he did not take the oath required until after May 1, in any affected the completeness and finality of that appointment.

The Supreme Court of the United States seems to have settled a principle whi conclusive upon this question.

In the case of United States *v.* Le Baron (19 How., 73), the question was consid

whether a deputy postmaster's appointment was in force at the time of his giving his bond. It appeared that his nomination had been confirmed by the Senate, and his commission had been signed by President Taylor, who shortly thereafter died, such commission not having been delivered to him at the time of executing his bond. The court held:

"When a person has been nominated to an office by the President, confirmed by the Senate, and his commission has been signed by the President, and the seal of the United States affixed thereto, his appointment to that office is complete. Congress may provide, as it has done in this case, that certain acts shall be done by the appointee before he shall enter on the possession of the office under his appointment. These acts, then, become conditions precedent to the complete investiture of the office; but they are to be performed by the appointee, not by the Executive. All the Executive can do to invest the person with his office has been completed when the commission has been signed and sealed; and when the person has performed the required conditions his title to enter on the possession of the office is also complete. The transmission of the commission to the officer is not essential to his investiture of the office. If by any inadvertence or accident it should fail to reach him, *his possession of the office is as lawful as if it were in his custody.* * * * It is of no importance that the person commissioned must give a bond and *take an oath* before he possesses the office under the commission; nor that it is the duty of the Postmaster-General to transmit the commission to the officer when he shall have done so."

See also the case of Marbury *v.* Madison (1 Cranch, 137), in which the court remarks:

"The discretion of the Executive is to be exercised until the appointment has been made. But having once made the appointment, his power over the office is terminated in all cases where by law the officer is not removable by him. *The right to the office is then in* the person appointed, and *he has the absolute, unconditional power of accepting or rejecting it.*"

No material distinction is apparent between the case of an appointment by the President, after confirmation by the Senate, and an appointment by the Postmaster-General. The question in each case hinges upon the time when the appointment is complete; and, under the authority of the above cases, the appointment of Taylor, under the facts stated, must have been complete before May 1, 1889, the day when the civil service rules took effect.

I am therefore constrained to hold that Mr. Taylor was legally appointed on April 29, under the laws of the United States, and that the fact that he did not take the oath of office until after May 1, is immaterial upon the question of his right to hold the office to which he was appointed on April 29.

The papers by you transmitted are herewith returned.

Very respectfully,

O. W. CHAPMAN,
Solicitor-General.

Approved:

W. H. H. MILLER,
Attorney-General.

Reinstatement of Louis M. Fitch.

DEPARTMENT OF JUSTICE,
Washington, October 26, 1889.

The PRESIDENT:

SIR: I have the honor to acknowledge the receipt of your request for an opinion upon the letter and inclosures forwarded to you by the Hons. Charles Lyman and Hugh S. Thompson, Civil Service Commissioners, under date of October 16, 1889.

The letter of the honorable Commissioners does not give the necessary statement

of a case upon which to base an opinion, but from a careful examination of t inclosures the essential facts appear to be as follows:

Louis M. Fitch "resigned his clerkship" in the War Department "June 30, 188 "He was re-appointed November 2, 1888," upon the "certification" of the comm sion, "but as he *failed* to avail himself of this opportunity to *re-enter* the service, appointment was canceled on January 28, 1889."

On August 13, 1889, the Secretary of War requested that Mr. Fitch's "name certified for re-instatement."

To this request for a *second* certificate, the Civil Service Commission, through president, on August 15, 1889, replied as follows, viz:

"As Mr. Fitch did not appear and take the oath of office upon his re-appointme in November, 1888, and as that appointment was therefore never consummated, t was canceled on January 23 [28], 1889, and more than one year having *elapsed si* the date of Mr. Fitch's *separation* from the *service*, namely, on June 30, 1888, he is n eligible for re-appointment under Departmental Rule X, not having served in t Army or Navy during the late war of the rebellion. Certificate for his re-appoi ment can not, therefore, issue."

The letter of the honorable Commissioners to the President, dated October 1889, says:

"The Civil Service Commission has the honor to submit herewith the request the Secretary of War for a certificate for the re-instatement in the War Departme under Departmental Rule X, of Mr. Louis M. Fitch, with accompanying papers.

The commission declined to issue the certificate on the ground that Fitch had b more than one year *separated* from the *service*, and so informed the Secretary of W under date of August 15, 1889 (a copy of letter inclosed); but in view of the opin of the Attorney-General, in the matter of the appointment of J. M. Taylor as a r way postal clerk, the commission has been led to doubt the correctness of this tion. It has therefore been thought best to submit the case to the President, w the request that the opinion of the Attorney-General be obtained upon the questi whether the proceedings had in Fitch's case in November, 1888, constituted an pointment, in view of the fact that he *failed to* take the oath of office and *enter u duty*, and the subsequent *cancellation* of the appointment by the Department."

Departmental Rule X is as follows:

"Upon requisition of the head of a Department, the commission shall certify re-instatement in said Department, in a grade requiring no higher examination t the one in which he was formerly employed, any person who, *within one year next p ceding* the date of the requisition, *has*, through no delinquency or misconduct, b *separated from* the classified service of that Department: *Provided*, That certificat may be made, subject to the other conditions of this rule, for the re-instatemen any person who served in the military or naval service of the United States in late war of the rebellion, and was honorably discharged therefrom, without reg to the length of time he has been separated from the service."

Under the phraseology of this rule, it will at once be seen that the question hei not "whether the proceedings had * * * constituted an *appointment*," etc., whether Mr. Fitch had "*been separated* from the classified service of that (the W Department" "within one year next preceding the date of the requisition," wh date was August 13, 1889.

It is conceded that Mr. Fitch resigned his clerkship June 30, 1888, and hence that day he "separated from the service." The separation, which thus began to on the day he resigned, must have continued until he did actually re-enter the se ice. A "certificate for re-instatement" as per Rule X, did not put him in; a n "appointment" under it, did not put him in. These, together, gave him a *right* t in, which until canceled or revoked he could accept or refuse. But, it so happ that his appointment was canceled before acceptance, and before any service un it, and at a time when the Secretary of War had full authority to so cancel it. I

any time before such cancellation Fitch had complied with the necessary formalities and had entered the service, he would *then* have been *re-instated*. But the Secretary of War asserts, and the commission agrees, that he "*failed* * * * *to re-enter* the service" prior to such cancellation. The mere fact that he had a *right* to go into the service did not put him in; and if he did not *get in* at the time indicated, he could not thereafter have "*been separated*" from it, within the wording of said rule.

These considerations show clearly a very wide distinction between this case and the case of J. M. Taylor, referred to in the Commissioners' communication. Without alluding to differences in the wording and the application of the law governing the two cases, it is sufficient here to say that in the Taylor case the appointment was not canceled at any time—either before or after acceptance and service—while in this case the appointment was canceled before either acceptance or service. A careful reading of the opinions in *Marbury* v. *Madison* (1 Cranch, 137,) and *United States* v. *LeBaron* (19 How., 73), cited by this Department in Taylor's case, will show the importance of this distinction.

It is said that Mr. Fitch, prior to June 30, 1888, had been for many years an efficient clerk, that he resigned, and was unable to re-enter, by reason of impaired health, etc. I need not say that while these considerations appeal to an exercise of all possible discretion in his favor, they do not bear upon the question submitted as to *what* is the *law*.

The decision of the honorable commission rendered August 15, 1889, to the effect that a *second* certificate for re-appointment could not issue to Mr. Fitch, because he had been separated from the service for more than a year, seems to be in accordance with Rule X.

Very respectfully,

O. W. CHAPMAN,
Solicitor-General.

Approved:
W. H. H. MILLER,
Attorney-General.

EMPLOYMENT OF SUBSTITUTES IN THE DEPARTMENTAL SERVICE.

DEPARTMENT OF JUSTICE,
Washington, D. C., March 6, 1890.

SIR: In accordance with your request of January 30, 1890, to the Attorney-General for an opinion upon the power of the Civil Service Commission, with your approval, to adopt an amendment to Departmental Rule VII of the Regulations of the Civil Service Commission, I have the honor to submit the following:

The amendment proposed is a provision for the employment of substitutes for clerks, copyists, and employés of other grades in the service of the Departments who are temporarily absent, from sickness or other unavoidable cause, and for the selection of such substitutes from persons regularly certified by the Civil Service Commission. The amendment also revokes Departmental Rule II, forbidding the employment of substitutes.

The question suggested by the Commission in their letter to you, and which is now to be answered, is whether such regulation is in violation of that part of section 4 of the act of the 5th of August, 1882 (U. S. Stats., vol. 22, page 255), which provides—

That no civil officer, clerk, draughtsman, copyist, messenger, assistant messenger, mechanic, watchman, laborer, or other employé shall, after the 1st day of October next, be employed in any of the Executive Departments, or subordinate bureaus or offices thereof at the seat of Government, except only at such rates and in such numbers, respectively, as may be specifically appropriated for by Congress for such clerical and other personal services for each fiscal year; and no civil officer, clerk, draughtsman, copyist, messenger, assistant messenger, mechanic, watchman, laborer, or other employé shall hereafter be employed at the seat of Government in any Executive De-

partment or subordinate bureau or office thereof, or be paid from any appropria made for contingent expenses or for any specific or general purpose, unless s employment is authorized and payment thereof specifically provided in the law gr ing the appropriation, and then only for services actually rendered in connect with and for the purposes of the appropriation from which payment is made, and the rate of compensation usual and proper for such services.

While there is nothing in this section which denies the power of the Civil Serv Commission, with your approval, to make the amendment proposed, in my opini such amendment would be inoperative wherever it should become necessary to ma an additional expenditure for the employment of the substitute. Section 4 of t act of August 5, 1882, already quoted, forbids the employment of any officer, cle etc., except only at such rates and in such numbers as may be specifically app priated for by Congress, and no such officer, clerk, etc., is to be paid from any app priation made for contingent expenses unless such employment is authorized a payment therefor specifically provided in the law granting the appropriation contingent expenses. There is no specific appropriation of a contingent fund substitutes. Moreover, section 3682 of the Revised Statutes expressly provides th no moneys for contingent, incidental, or miscellaneous purposes shall be expended paid for official or clerical compensation. Where, therefore, in the employment substitutes, an aditional expenditure is required, there would be no lawful means the payment of such substitutes.

By section 4 of the act of Congress of March 3, 1883 (22 Stats., 563, 564), it is p vided that—

All absence from the Departments on the part of said clerks or other employés excess of such leave of absence as may be granted by the heads thereof, which sh not exceed thirty days in any one year, except in case of sickness, shall be with pay.

It is necessarily implied from this provision that pay for thirty days in any year may be continued during the period of absence, at the discretion of the h of the Department, and that, in case of sickness, pay may continue without any s limitation. It is apparent, therefore, that in nearly all cases of temporary absen from sickness or other unavoidable cause—which are the cases covered by the ame ment proposed—the pay of the absent clerk, employé, etc., would continue, and t a substitute would impose upon the Government an additional expenditure. T expense, as has been said, it would be beyond the power of the heads of the Dep ments to incur.

The result is that the amendment proposed is not beyond the power of the C Service Commission, with your approval, to make, but that, in the great majorit cases to which by its present terms it would seem to apply, it would be by law in erative.

Very respectfully,

WM. H. TAFT, *Solicitor-General.*

Approved:

W. H. H. MILLER, *Attorney-Genera*

The PRESIDENT.

STATUS OF CONTRACT SURGEONS FOR RE-INSTATEMENT UNDER PROVISO OF DEPA MENTAL RULE X.

DEPARTMENT OF JUSTICE,
Washington, D. C., April 8, 189

SIR: In a letter of February 27, 1890, at the instance of the Civil Service Comi sion, you requested the opinion of the Attorney-General upon the question "whet contract surgeons are entitled to the benefits contingently conferred upon cer persons by the proviso to Departmental Rule X of the Civil Service Rules and Reg

tions." Your letter is accompanied by a correspondence between the Secretary of the Interior and the Civil Service Commission, in which the Secretary requests the necessary certification under this Rule X for the re-instatement of Dr. Harvey E. Bowles as a clerk of class 1 in the Pension Office, said Bowles having been dismissed to take effect February 28, 1886, and no record of delinquency or misconduct on his part appearing in the office. The request was based on the statement of the Secretary that Bowles had served in the Union Army from April 21, 1864, to July 6, 1865—ten months in the hospital service and the remainder of the time at Fort Whipple. The Civil Service Commission requested a statement from the War Department of the military service and hospital record of Dr. Bowles, and were informed by that Department that its records showed that on April 21, 1864, Harvey E. Bowles' contract with the Government as surgeon began, and that it terminated on the 6th of July, 1865. In answer to the request of the Commission to be informed "whether this man's service is considered by the War Department as an Army service—whether persons occupying the position of 'contract surgeon' were considered a part of the military force of the United States during the late war," the War Department replied that contract surgeons were not considered as a part of the military forces of the United States during the late war. In consequence of this statement and opinion from the War Department the certificate requested by the Secretary of the Interior was refused by the Civil Service Commission. On December 20, 1889, Bowles requested that the Civil Service Commission be again asked to furnish the necessary certificate for his re-instatement, and accompanied that request with written orders issued to him as acting assistant surgeon of the United States Army, while he was fulfilling his contract as surgeon with the Government, as evidence in his behalf.

Departmental Rule X is as follows:

> Upon requisition of the head of a Department the Commission shall certify for re-instatement in said Department, in a grade requiring no higher examination than the one in which he was formerly employed, any person who, within one year next preceding the date of the request, has, through no delinquency or misconduct, been separated from the classified service of that Department: *Provided*, That certification may be made subject to the other conditions of this rule for the re-instatement of any person who served in the military or naval service of the United States in the late war of the rebellion and was honorably discharged therefrom without regard to the length of time he has been separated from the service.

I am of the opinion that the question put by you should be answered in the affirmative and that Dr. Bowles is entitled to the benefits conferred by the proviso in Departmental Rule X just quoted.

An examination of Winthrop's Digest of the Opinions of the Judge-Advocate-General, under the title "acting assistant" or "contract surgeon," page 102, shows that a contract surgeon was a physician under a special contract for his personal services as a medical attendant to the troops; that contract surgeons were employed because there were not enough medical officers of the Army to attend all the posts; that they were amenable to the military jurisdiction when employed with the Army in time of war, but that they were civilians, without military rank and status, and were not a part of the military establishment, and that when not serving with troops before the enemy they had no other relations to the military organization or the Government than that established by the terms of their contracts.

The orders issued to Dr. Bowles show beyond question that he was an acting assistant or "contract" surgeon, rendering service to the troops in the field before the enemy during the late war.

It has already been decided in an opinion of the late Solicitor-General Chapman, approved by Attorney-General Miller, of date November 19, 1889, that the proviso of Departmental Rule X, here in question, was not limited in its application to persons who served during the rebellion in the Army of the United States within the statutory definition of that term given in section 1094 of the Revised Statutes, and it was there held that the clerks and employés on the public buildings in Washington who were organized into companies under the direction of General Wadsworth, and who

served in what was known as the "Quartermaster's Brigade," who were uniformed, armed, equipped, and drilled, and were employed in scouting and other duty, although not regularly enrolled and enlisted in the Army of the United States and not honorably discharged from such enlistment, within the technical meaning of that term as used with reference to the release of regularly enlisted soldiers in the Army of the United States, were nevertheless within the proviso of said Rule X, and must be held within the language of that proviso "to have served in the military service of the United States in the late war of the rebellion," and to have been honorably discharged therefrom.

It seems to me that it is not possible to distinguish in principle the case of the quartermaster's volunteers from that of the contract surgeons, provided the latter as was the case with Bowles, took the place of and performed the duties of regularly enrolled surgeons on the field and in the military hospitals. The proviso to Rule X is to be construed liberally as a grateful recognition of patriotic service. If it had been the intention of the commissioners, and the President, who approved the proviso, to have limited its operation to regularly appointed officers and regularly enlisted soldiers of the Army of the United States, it would have been easy to have so framed its terms, and the conclusion would have then been reached which Attorney-General Devens found necessary in his opinion of September 23, 1878 (16 Opin., 147). Bowles served the Government of the United States as a surgeon from April, 1864, to July, 1865, and during that time there is no reason to suppose that his service was not as dangerous, his labor not as irksome, and the physical and mental strain upon him not as great as it was in the case of any regularly appointed surgeon of the Army engaged on the field of battle, in the military hospitals, or at military forts during the same period.

In the analagous case of pensions (for the principle upon which pensions are granted and this proviso was inserted is the same) we find that a contract surgeon who was disabled by any wound or injury received or disease contracted in the line of duty while actually performing the duties of assistant surgeon, or acting assistant surgeon, with any military force in the field, or *in transitu*, or in hospitals, is entitled to receive a pension as a beneficiary under the pension laws. (See Rev. Stat., sec. 4693. By opinion of September 26, 1882, Acting Attorney-General Phillips decided that contract surgeon who was making his preparations to leave St. Louis for Cairo, Ill. there to go on duty as a contract surgeon, and who died from typhoid fever, was *transitu* within the meaning of this provision. The same liberality of construction requires that Dr. Bowles should be held to have served in the military service of the United States, and by the completion of his contract with the Government to have been honorably discharged from such service.

Very respectfully,

WM. H. TAFT, *Solicitor-General.*

Approved:

W. H. H. MILLER, *Attorney-General.*

The SECRETARY OF WAR.

DEPARTMENT OF JUSTICE,
Washington, May 9, 1890.

SIR: Your communication of March 12, 1890, submits for consideration and opinion the following case:

On February 25, 1890, the Secretary of War addressed a communication to the United States Civil Service Commission, stating that John A. Hayward had made application for re-instatement as a clerk in the War Department under amended Departmental Rule 10, Civil Service Rules.

Hayward was enlisted in the general service for clerical duty at the headquarters of the Army May 13, 1863, and was transferred to the Adjutant-General's Office Ap-

1, 1864, in which office he served until May 13, 1868, when he was discharged, through no delinquency or misconduct on his part.

During the time mentioned the clerical force of the Department was largely composed of what were known as general service clerks, who were duly authorized and enlisted expressly for clerical duty in the War Department and its bureaus, and were afterwards by the legislative, executive, and judicial appropriation act of August 5, 1882, transferred to the regular list.

The records show that Mr. Hayward served in the war of the rebellion in Company B, Twenty-first New York Volunteers, from May 12, 1861, to May 13, 1863, when he was honorably discharged.

In view of these facts the Secretary of War requested that Hayward's name be certified for re-instatement to a clerkship in the War Department of Class $1,000, a vacancy in which grade now exists.

The Civil Service Commission being in doubt as to whether Hayward came under amended Department Rule 10, Civil Service Rules, asked that the question be referred to the Attorney-General for an opinion.

The amended Departmental Rule 10 is in the following words:

Upon requisition of the head of a Department, the commission shall certify for re-instatement in said Department, in a grade requiring no higher examination than the one in which he was formerly employed, any person who, within one year next preceding the date of the requisition, has, through no delinquency or misconduct, been separated from the classified service of that Department: *Provided*, That certification may be made, subject to the other conditions of this rule, for the re-instatement of any person who served in the military or naval service of the United States, in the late war of the rebellion, and was honorably discharged therefrom, without regard to the length of time he has been separated from the service.

It will be observed that the re-instatement contemplated by this rule is, first, that of any person who once belonged "*to the classified service*" of a Department, and who has been separated from that classified service "through no delinquency or misconduct," and for whose re-instatement an application has been made within one year next preceding the date of such application; and, secondly, that of any person who has served honorably in the war of the rebellion and been honorably discharged "without regard to the length of time he has been separated *from the service*," if otherwise qualified under the rule.

In either case the applicant may be re-instated in such department "in a *grade* requiring no higher examination *than the one in which he was formerly employed*."

By section 3 of the act of March 3, 1853 (10 Stat., 209), it was declared that after June 30, 1853, "the clerks in the Department of the Treasury, War, Navy, the Interior, and the Post-Office shall be arranged into four classes, of which class number one shall receive an annual salary of $900 each, class number two an annual salary of $1,200 each, class number three an annual salary of $1,400 each, and class number four an annual salary of $1,800 each; and it was further declared by this law (p. 211) that "no clerk shall be appointed in either of the four classes until after he has been examined and found qualified by a board, to consist of three examiners," etc., and by section 4 of the act of March 3, 1855 (10 Stat., 669), the above provisions were applied to the Department of State. This legislation now constitutes sections 163 and 164 of the Revised Statutes.

This was the state of the law on May 13, 1868, when Hayward was "*discharged*" from the War Department.

I do not think it can be said with any propriety that Hayward, whose *status* was that of an enlisted soldier, belonged to any "grade" of the "classified departmental service;" which was then composed of "clerks in the Departments" (sec. 163, Rev. Stat.), and was purely *civil* in character. It could only be entered after a successful examination (sec. 164, Rev. Stat.), but it does not appear that Hayward was subjected to an examination before he was detailed for duty in the War Department, although it appears that he was enlisted for clerical duty only.

Hayward, being then a military person, and receiving the pay of an enlisted sol-

dier, and, therefore, not being a member of the "classified service," I am not able to see how he can be brought within the amended Departmental Rule 10, which provides only for the re-instatement in the classified service of a Department of a person who has, from no fault of his own, *been separated from that service.* Having never belonged to the classified departmental service, it is impossible for Hayward to be reinstated in that service.

This view seems to be fully supported by the act of August 5, 1882 (22 Stat., 242), which substituted for the "general service" or "detailed enlisted men from the Army," doing duty in the various offices and bureaus of the War Department, clerks in the classified service, and authorized the Secretary of War to put the enlisted men so employed into the classified service, which plainly shows that Congress did not understand that enlisted men detailed as clerks belonged to the classified service.

It results, therefore, from the aforegoing that Hayward can not be certified under amended Departmental Rule 10, as requested by the Secretary of War.

Very respectfully, yours,

W. H. H. MILLER, *Attorney-General.*

The PRESIDENT.

NUMBERS EMPLOYED IN THE CLASSIFIED POST-OFFICE SERVICE.

POST-OFFICE DEPARTMENT, OFFICE OF POSTMASTER-GENERAL,
Washington, D. C., December 3, 1889.

SIR: In reply to your letter of the 27th ultimo, which was acknowledged on the 29th ultimo, relative to the number of postal clerks, money-order clerks, carriers, substitute carriers, special-delivery messengers, and all other persons of whatever character, attached to the forty-three post-offices within the classified service, I have the honor to inclose herewith a tabulated statement showing the number of employés in each line of duty and the total number at each of the said offices.

Very respectfully,

JNO. WANAMAKER,
Postmaster-General.

Hon. CHARLES LYMAN,
President Civil Service Commission, Washington, D. C.

[Note: For the table referred to in the above letter see the following page.]

POST-OFFICE DEPARTMENT,
OFFICE OF THE FIRST ASSISTANT POSTMASTER-GENERAL,
SALARY AND ALLOWANCE DIVISION,
Washington, D. C., December 2, 1889.

ment showing the number of clerks (postal and money-order), carriers, substitute carrs, and special delivery-messengers at the forty-three offices now classified under the il service rules.

Office.	State.	Clerks.		Carriers.		Special-delivery messengers.	Total.
		Postal.	Money-order.	Regular.	Substitute.		
Albany	N. Y	37	2	40	11	4	94
Atlanta	Ga	23	3	22	9	2	59
Baltimore	Md	144	5	216	48	15	428
Boston	Mass	454	18	444	107	48	1,071
Brooklyn	N. Y	133	2	361	37	27	560
Buffalo	N. Y	59	6	103	11	6	185
Chicago	Ill	640	35	610	135	251	1,671
Cincinnati	Ohio	146	9	158	24	13	350
Cleveland	Ohio	65	5	96	10	8	184
Columbus	Ohio	22	2	36	5	3	68
Denver	Colo	31	5	40	16	5	97
Des Moines	Iowa	22	6	29	7	1	62
Detroit	Mich	65	7	82	9	7	170
Grand Rapids	Mich	17	2	28	6	2	55
Hartford	Conn	24	3	28	8	4	67
Indianapolis	Ind	43	5	52	10	5	115
Jersey City	N. J	20	1	58	13	2	94
Kansas City	Mo	72	7	68	23	1	171
Los Angeles	Cal	37	2	34	12	1	86
Louisville	Ky	54	5	60	12	4	135
Milwaukee	Wis	50	5	74	13	5	147
Minneapolis	Minn	46	5	74	7	11	143
Nashville	Tenn	18	3	25	3	1	50
Newark	N. J	32	2	67	17	4	122
New Haven	Conn	25	2	38	13	3	81
New Orleans	La	94	11	81	21	10	217
New York	N. Y	1,191	91	1,102	162	331	2,877
Oakland	Cal	12	1	27	4	3	47
Omaha	Nebr	34	3	45	7	2	91
Philadelphia	Pa	413	16	701	142	34	1,306
Pittsburgh	Pa	93	4	94	14	18	223
Portland	Me	24	3	23	6	2	58
Providence	R. I	32	2	49	10	3	96
Richmond	Va	27	3	34	7	2	73
Rochester	N. Y	38	4	65	12	8	127
St. Louis	Mo	192	15	226	36	12	481
St. Paul	Minn	44	5	74	11	4	138
San Francisco	Cal	106	8	160	39	35	348
Syracuse	N. Y	29	3	40	8	3	83
Toledo	Ohio	25	3	33	9	3	73
Troy	N. Y	18	1	37	3	2	61
Washington	D. C	186	6	115	18	20	345
Worcester	Mass	20	1	29	3	4	57
Total		4,857	324	5,778	1,078	929	12.966

LETTER OF BOARD OF EXAMINERS ON EXAMINATIONS FOR LIBRARIAN.

WASHINGTON, *January* 24, 1889.

Hon. ALFRED P. EDGERTON,

President United States Civil Service Commission:

SIR: We have the honor to submit the accompanying marks that we, as a board of examiners appointed to conduct a non-competitive examination for the position of librarian of the War Department, have assigned to the replies made by the single candidate that appeared for examination.

On the general subject of this and similar examinations, we desire to submit our views in brief, as follows:

A library is a power for good or a useless expense, according as it is used or not, and the use that is made of it depends mainly on the intelligence and devotion of the librarian. Our individual experiences and numerous complaints among departmental officials have long since convinced us that many bureau and department libraries do not realize the degree of usefulness that they are capable of, and that this is to be remedied first by securing as librarians a higher order of expert talent. There are probably over thirty libraries in the governmental bureaus of this city, having each 3,000 volumes or upwards, and some of the larger ones are managed by men or women whose rank and pay is that of clerks, while others are in the hands of men appointed for reasons other than fitness for this special work. We believe that it is for the public interest that the latter class of appointments should be discouraged, and that every proper means should be taken to secure for the use of the secretaries and the chiefs of bureaus the best librarian experts attainable for the respective salaries.

There is a general objection to employing on a higher grade of work those who are engaged and paid for a lower grade, and we believe that this principle should especially apply when those graded as clerks are liable to be assigned to duty as librarians.

The standard of what constitutes a good librarian has been adopted by us not merely in accordance with our own private judgment, but equally in accordance with the expressed opinions of many others, who during the past twenty years have been developing the great advance that has been made in this important branch of business.

In an ordinary competitive examination there is always reason to hope that the best of many applicants will do better in practice than in his examination. But in a special non competitive examination, our only hope of securing a man satisfactory to his superior officers consists in making the examination as rigid as is in any way allowable or fair.

In the present case our only object has been to ascertain whether the candidate gives fair promise of doing satisfactorily the duties that are known to devolve upon the librarian of the War Department. The questions as put express our conviction that he ought to be well acquainted with the languages of the nations with which we have military and diplomatic dealings; that he should know the most ordinary matters inseparable from the management of libraries and the preparation of catalogues; and that he should have, at least to begin with, a fair knowledge of the work of the Department and the military matters upon which he will have to furnish information almost daily.

The marks assigned by us express our convictions as to his proficiency in each item in so far as we could judge from his replies.

We have the honor to remain, very respectfully, yours,

CLEVELAND ABBE.
CHARLES DARWIN.
EDWARD FARQUHAR.

SCHEDULE OF EXAMINATIONS FOR 1890.

Each applicant must select from this schedule the time and place at which he wishes to be examined and notify the Commission of his choice on the accompanying slip for that purpose. The slip and application complete, including the certificates of vouchers, must be filed with the commission for examinations to be held at Washington and points east of the Mississippi River at least six days before the date fixed for the examination; for examinations to be held at points between the Mississippi River and the Rocky Mountains at least ten days before the examination; and for examinations west of the Rocky Mountains at least fifteen days before the examination.

N. B.—All examinations commence at 9 a. m. All applicants must be present promptly at the hour of beginning. Where it is not otherwise specified in the following table the railway mail and departmental examinations are held on the same day. If for good reason an applicant fails to attend the examination which he first selects, or if he desires to change the time and place of his examination, he should send to the Commission for an "examination slip," and on that indicate the change. A new "admission card" will *not* be needed, as the old card will be good for an examination within a year from the date thereof. No attention will be paid to letters naming the place of examination unless accompanied by the "slip," or to requests for examinations at times and places not mentioned on this schedule. Applicants can ascertain the building in which the examination will be held by inquiry at the post-office in the city selected.

ALABAMA	Mobile, Wednesday, February 19. Birmingham, Wednesday, March 12. Decatur, Thursday, September 4. Montgomery, Tuesday, September 30.
ARIZONA	Tucson, Tuesday, October 7.
ARKANSAS	Texarkana, Wednesday, March 5. Little Rock, Monday, March 24. Fort Smith, Wednesday, March 26. Little Rock, Tuesday, September 9.
CALIFORNIA	San Francisco, Monday, June 2. Sacramento, Saturday, September 27. San Francisco, Tuesday, September 30. Los Angeles, Friday, October 3.
COLORADO	Denver, Tuesday, September 16. Pueblo, Thursday, September 18.
CONNECTICUT	New Haven, Monday, May 12. Hartford, Saturday, May 31. New Haven, Wednesday, October 8.
DELAWARE	Wilmington, Tuesday, August 5.
DISTRICT OF COLUMBIA (Washington, D. C.)	For the copyist register, Tuesday, March 4, June 3, September 2, December 2. For the clerk register, Wednesday, March 5, June 4, September 3, December 3. For special registers, Tuesday, January 14, April 8, July 8, October 14. For the railway mail service, Tuesday, February 11, May 6, August 12, November 4. N. B.—Applicants for examinations in Washington must be careful to select the right date for the KIND of examination desired. Applicants for supplementary examinations who have previously taken either the copyist or the clerk examination may be examined on any Monday. N. B.—No applicant whose legal residence is in the District of Columbia will be examined until further notice, except applicants for the railway mail service.
FLORIDA	Jacksonville, Saturday, February 15. Jacksonville, Thursday, October 16.

GEORGIA	Savannah, Tuesday, February 11. Macon, Thursday, February 13. Atlanta, Thursday, October 2, departmental service. Atlanta, Friday, October 3, railway mail service. Savannah, Tuesday, October 14. Macon, Saturday, October 18.
IDAHO	Boisé City, Tuesday, June 10.
ILLINOIS	Cairo, Wednesday, April 9. Chicago, Monday, April 14, departmental service. Chicago, Tuesday, April 15, railway mail service. Bloomington, Saturday, May 3, departmental service. Bloomington, Monday, May 5, railway mail service. Springfield, Friday, August 29. Chicago, Thursday, October 30, departmental service. Chicago, Friday, October 31, railway mail service.
INDIANA	Fort Wayne, Saturday, March 29. Evansville, Friday, April 11. La Fayette, Friday, April 11. Indianapolis, Wednesday, May 7, departmental service. Indianapolis, Thursday, May 8, railway mail service. Indianapolis, Monday, Nov. 24, departmental service. Indianapolis, Tuesday, Nov. 25, railway mail service.
IOWA	Des Moines, Monday, April 28, departmental service. Des Moines, Tuesday, April 29, railway mail service. Davenport, Thursday, May 1. Dubuque, Friday, November 7. Des Moines, Thursday, Nov. 20, departmental service. Des Moines, Friday, Nov. 21, railway mail service.
KANSAS	Salina, Thursday, September 11. Colby, Saturday, September 13. Garden City, Monday, October 13. Newton, Wednesday, October 15. Topeka, Friday, October 17.
KENTUCKY	Lexington, Wednesday, March 12. Louisville, Friday, March 14. Bowling Green, Monday, March 17. Barboursville, Wednesday, March 19. Louisville, Saturday, August 23.
LOUISIANA	New Orleans, Friday, February 21. Shreveport, Friday, March 7. Shreveport, Wednesday, September 17. New Orleans, Friday, Sept. 26, departmental service. New Orleans, Saturday, Sept. 27, railway mail service
MAINE	Portland, Wednesday, May 21. Portland, Thursday, September 25. Bangor, Saturday, September 27.
MARYLAND	Baltimore, Tuesday, March 4. Hagerstown, Thursday, March 6. Baltimore, Tuesday, August 12, railway mail service. Baltimore, Tuesday, September 2, for copyists only. Baltimore, Wednesday, September 3, for clerks only.
MASSACHUSETTS	Boston, Friday, May 16, departmental service. Boston, Saturday, May 17, railway mail service. Springfield, Wednesday, May 28. Boston, Thursday, October 2, departmental service. Boston, Friday, October 3, railway mail service.
MICHIGAN	Detroit, Saturday, March 22. Lansing, Tuesday, March 25. Grand Rapids, Thursday, March 27. Detroit, Saturday, October 25. Lansing, Tuesday, October 28.
MINNESOTA	St. Paul, Wednesday, May 7. Brainerd, Friday, May 9. St. Paul, Monday, November 10. Mankato, Wednesday, November 12.

MISSISSIPPI	Vicksburg, Monday, March 10. Oxford, Friday, September 12. Jackson, Monday, September 15.
MISSOURI	Springfield, Friday, March 28. Kansas City, Monday, March 31, departmental service. Kansas City, Tuesday, April 1, railway mail service. Moberly, Thursday, April 3. St. Louis, Saturday, April 5, departmental service. St. Louis, Monday, April 7, railway mail service. St. Louis, Tuesday, August 26, departmental service. St. Louis, Wednesday, August 27, railway mail service. Kansas City, Monday, October 20, departmental service. Kansas City, Tuesday, October 21, railway mail service.
MONTANA	Miles City, Friday, May 16. Helena, Monday, May 19.
NEBRASKA	Omaha, Thursday, April 24, departmental service. Omaha, Friday, April 25, railway mail service. North Platte, Monday, June 16. Lincoln, Wednesday, June 18. Omaha, Monday, November 17, departmental service. Omaha, Tuesday, November 18, railway mail service.
NEVADA	Carson City, Thursday, September 25.
NEW HAMPSHIRE	Concord, Monday, May 19. Portsmouth, Tuesday, September 30.
NEW JERSEY	Trenton, Tuesday, May 6.
NEW MEXICO	Albuquerque, Friday, October 10.
NEW YORK	Rochester, Monday, March 17. Buffalo, Wednesday, March 19, departmental service. Buffalo, Thursday, March 20, railway mail service. New York, Thursday, May 8, departmental service. New York, Friday, May 9, railway mail service. Elmira, Saturday, September 13. Albany, Tuesday, September 16. Syracuse, Thursday, September 18. Watertown, Saturday, September 20. New York, Friday, October 10, departmental service. New York, Saturday, October 11, railway mail service. Buffalo, Thursday, October 16, departmental service. Buffalo, Friday, October 17, railway mail service.
NORTH CAROLINA	Charlotte, Saturday, February 1. Wilmington, Tuesday, February 4. Raleigh, Thursday, October 9. Charlotte, Thursday, October 23.
NORTH DAKOTA	Fargo, Monday, May 12. Bismarck, Wednesday, May 14.
OHIO	Toledo, Tuesday, April 1. Cleveland, Thursday, April 3, departmental service. Cleveland, Friday, April 4, railway mail service. Columbus, Tuesday, April 8, departmental service. Columbus, Wednesday, April 9, railway mail service. Cincinnati, Monday, April 14, departmental service. Cincinnati, Tuesday, April 15, railway mail service. Cincinnati, Wednesday, Aug. 20, departmental service. Cincinnati, Thursday, August 21, railway mail service. Cleveland, Monday, October 20, departmental service. Cleveland, Tuesday, October 21, railway mail service. Toledo, Thursday, October 23. Columbus, Thursday, Nov. 27, departmental service. Columbus, Friday, November 28, railway mail service.
OREGON	Portland, Tuesday, May 27. Roseburgh, Thursday, May 29.

PENNSYLVANIA	Philadelphia, Tues., March 11, departmental service. Philadelphia, Wed., March 12, railway mail service. Williamsport, Friday, March 14. Pittsburgh, Monday, April 7, departmental service. Pittsburgh, Tuesday, April 8, railway mail service. Philadelphia, Thurs., August 7, departmental service. Philadelphia, Friday, August 8, railway mail service. Harrisburg, Monday, August 11, departmental service. Harrisburg, Tuesday, August 12, railway mail service. Pittsburgh, Thurs., August 14, departmental service. Pittsburgh, Friday, August 15, railway mail service.
RHODE ISLAND	Providence, Wednesday, May 14. Providence, Monday, October 6.
SOUTH CAROLINA	Columbia, Thursday, February 6. Charleston, Saturday, February 8. Greenville, October 6. Charleston, Saturday, October 11. Columbia, Tuesday, October 21.
SOUTH DAKOTA	Yankton, Tuesday, April 22. Aberdeen, Friday, November 14.
TENNESSEE	Chattanooga, Friday, March 14. Knoxville, Monday, March 17. Nashville, Wednesday, March 19. Memphis, Friday, March 21. Nashville, Tuesday, September 2. Memphis, Saturday, September 6.
TEXAS	Houston, Tuesday, February 25. San Antonio, Thursday, February 27. Dallas, Monday, March 3. Dallas, Friday, September 19. San Antonio, Monday, September 22. Houston, Wednesday, September 24.
UTAH	Salt Lake City, Friday, June 6. Salt Lake City, Monday, September 22.
VERMONT	Burlington, Friday, May 23. Rutland, Monday, May 26. Burlington, Tuesday, September 23.
VIRGINIA	Richmond, Tuesday, January 26. Lynchburgh, Thursday, January 30. Richmond, Tuesday, October 7.
WASHINGTON	Spokane Falls, Wednesday, May 21. Seattle, Saturday, May 24.
WEST VIRGINIA	Martinsburgh, Friday, March 7. Charleston, Monday, March 10. Parkersburgh, Monday, August 18.
WISCONSIN	Milwaukee, Thursday, April 17. Madison, Saturday, April 19. Milwaukee, Monday, November 3. Madison, Wednesday, November 5.
WYOMING	Cheyenne, Friday, June 13.

FOR DATES OF EXAMINATION AT WASHINGTON, D. C.,

See District of Columbia, page 95.

SOUTHERN ROUTE—WINTER:

Richmond, Va., Tuesday, January 28.
Lynchburgh, Va., Thursday, January 30.
Charlotte, N. C., Saturday, February 1.
Wilmington, N. C., Tuesday, February 4.
Columbia, S. C., Thursday, February 6.
Charleston, S. C., Saturday, February 8.
Savannah, Ga., Tuesday, February 11.
Macon, Ga., Thursday, February 13.
Jacksonville, Fla., Saturday, February 15.
Mobile, Ala., Wednesday, February 19.
New Orleans, La., Friday, February 21.
Houston, Tex., Tuesday, February 25.
San Antonio, Tex., Thursday, February 27.
Dallas, Tex., Monday, March 3.
Texarkana, Ark., Wednesday, March 5.
Shreveport, La., Friday, March 7.
Vicksburg, Miss., Monday, March 10.
Birmingham, Ala., Wednesday, March 12.
Chattanooga, Tenn., Friday, March 14.
Knoxville, Tenn., Monday, March 17.
Barboursville, Ky., Wednesday, March 19.

MIDDLE WESTERN ROUTE—SPRING:

Baltimore, Md., Tuesday, March 4.
Hagerstown, Md., Thursday, March 6.
Martinsburgh, W. Va., Friday, March 7.
Charleston, W. Va., Monday, March 10.
Lexington, Ky., Wednesday, March 12.
Louisville, Ky., Friday, March 14.
Bowling Green, Ky., Monday, March 17.
Nashville, Tenn., Wednesday, March 19.
Memphis, Tenn., Friday, March 21.
Little Rock, Ark., Monday, March 24.
Fort Smith, Ark., Wednesday, March 26.
Springfield, Mo., Friday, March 28.
Kansas City, Mo., Monday, March 31, departmental service.
Kansas City, Mo., Tuesday, April 1, railway mail service.
Moberly, Mo., Thursday, April 3.
St. Louis, Mo., Saturday, April 5, departmental service.
St. Louis, Mo., Monday, April 7, railway mail service.
Cairo, Ill., Wednesday, April 9.
Evansville, Ind., Friday, April 11.
Cincinnati, Ohio, Monday, April 14, departmental service.
Cincinnati, Ohio, Tuesday, April 15, railway mail service.

NORTH MIDDLE ROUTE—SPRING:

Philadelphia, Pa., Tuesday, March 11, departmental service.
Philadelphia, Pa., Wednesday, March 12, railway mail service.
Williamsport, Pa., Friday, March 14.
Rochester, N. Y., Monday, March 17.
Buffalo, N. Y., Wednesday, March 19, departmental service.
Buffalo, N. Y., Thursday, March 20, railway mail service.
Detroit Mich., Saturday, March 22.
Lansing, Mich., Tuesday, March 25.
Grand Rapids, Mich., Thursday, March 27.
Fort Wayne, Ind., Saturday, March 29.
Toledo, Ohio, Tuesday, April 1.
Cleveland, Ohio, Thursday, April 3, departmental service.
Cleveland, Ohio, Friday, April 4, railway mail service.
Pittsburgh, Pa., Monday, April 7, departmental service.
Pittsburgh, Pa., Tuesday, April 8, railway mail service.

4. NORTHWESTERN ROUTE—SPRING:

Columbus, Ohio, Tuesday, April 8, departmental service.
Columbus, Ohio, Wednesday, April 9, railway mail service.
La Fayette, Ind., Friday, April 11.
Chicago, Ill., Monday, April 14, departmental service.
Chicago, Ill., Tuesday, April 15, railway mail service.
Milwaukee, Wis., Thursday, April 17.
Madison, Wis., Saturday, April 19.
Yankton, S. Dak., Tuesday, April 22.
Omaha, Nebr., Thursday, April 24, departmental service.
Omaha, Nebr., Friday, April 25, railway mail service.
Des Moines, Iowa, Monday, April 28, departmental service.
Des Moines, Iowa, Tuesday, April 29, railway mail service.
Davenport, Iowa, Thursday, May 1.
Bloomington, Ill., Saturday, May 3, departmental service.
Bloomington, Ill., Monday, May 5, railway mail service.
Indianapolis, Ind., Wednesday, May 7, departmental service.
Indianapolis, Ind., Thursday, May 8, railway mail service.

5. PACIFIC ROUTE—SPRING:

St. Paul, Minn., Wednesday, May 7.
Brainerd, Minn., Friday, May 9.
Fargo, N. Dak., Monday, May 12.
Bismarck, N. Dak., Wednesday, May 14.
Miles City, Mont., Friday, May 16.
Helena, Mont., Monday, May 19.
Spokane Falls, Wash., Wednesday, May 21.
Seattle, Wash., Saturday, May 24.
Portland, Oregon, Tuesday, May 27.
Roseburgh, Oregon, Thursday, May 29.
San Francisco, Cal., Monday, June 2.
Salt Lake City, Utah, Friday, June 6.
Boisé City, Idaho, Tuesday, June 10.
Cheyenne, Wyo., Friday, June 13.
North Platte, Nebr., Monday, June 16.
Lincoln, Nebr., Wednesday, June 18.

6. NORTHEASTERN ROUTE—SPRING:

Trenton, N. J., Tuesday, May 6.
New York, N. Y., Thursday, May 8, departmental service.
New York, N. Y., Friday, May 9, railway mail service.
New Haven, Conn., Monday, May 12.
Providence, R. I., Wednesday, May 14.
Boston, Mass., Friday, May 16, departmental service.
Boston, Mass., Saturday, May 17, railway mail service.
Concord, N. H., Monday, May 19.
Portland, Me., Wednesday, May 21.
Burlington, Vt., Friday, May 23.
Rutland, Vt., Monday, May 26.
Springfield, Mass., Wednesday, May 28.
Hartford, Conn., Saturday, May 31.

7. MIDDLE ROUTE—SUMMER:

Wilmington, Del., Tuesday, August 5.
Philadelphia, Pa., Thursday, August 7, departmental service.
Philadelphia, Pa., Friday, August 8, railway mail service.
Harrisburg, Pa., Monday, August 11, departmental service.
Harrisburg, Pa., Tuesday, August 12, railway mail service.
Baltimore, Md., Tuesday, August 12, railway mail service.
Pittsburgh, Pa., Thursday, August 14, departmental service.
Pittsburgh, Pa., Friday, August 15, railway mail service.
Parkersburgh, W. Va., Monday, August 18.
Cincinnati, Ohio, Wednesday, August 20, departmental service.
Cincinnati, Ohio, Thursday, August 21, railway mail service.
Louisville, Ky., Saturday, August 23.
St. Louis, Mo., Tuesday, August 26, departmental service.
St. Louis, Mo., Wednesday, August 27, railway mail service.
Springfield, Ill., Friday, August 29.
Baltimore, Md., Tuesday, September 2, for copyists only.
Baltimore, Md., Wednesday, September 3, for clerks only.

8. SOUTHWESTERN ROUTE—AUTUMN:

Nashville, Tenn., Tuesday, September 2.
Decatur, Ala., Thursday, September 4.
Memphis, Tenn., Saturday, September 6.
Little Rock, Ark., Tuesday, September 9.
Oxford, Miss., Friday, September 12.
Jackson, Miss., Monday, September 15.
Shreveport, La., Wednesday, September 17.
Dallas, Tex., Friday, September 19.
San Antonio, Tex., Monday, September 22.
Houston, Tex., Wednesday, September 24.
New Orleans, La., Friday, September 26, departmental service.
New Orleans, La., Saturday, September 27, railway mail service.
Montgomery, Ala., Tuesday, September 30.
Atlanta, Ga., Thursday, October 2, departmental service.
Atlanta, Ga., Friday, October 3, railway mail service.
Greenville, S. C., Monday, October 6.

9. NORTHEASTERN ROUTE—AUTUMN:

Elmira, N. Y., Saturday, September 13.
Albany, N. Y., Tuesday, September 16.
Syracuse, N. Y., Thursday, September 18.
Watertown, N. Y., Saturday, September 20.
Burlington, Vt., Tuesday, September 23.
Portland, Me., Thursday, September 25.
Bangor, Me., Saturday, September 27.
Portsmouth, N. H., Tuesday, September 30.
Boston, Mass., Thursday, October 2, departmental service.
Boston, Mass., Friday, October 3, railway mail service.
Providence, R. I., Monday, October 6.
New Haven, Conn., Wednesday, October 8.
New York, N. Y., Friday, October 10, departmental service.
New York, N. Y., Saturday, October 11, railway mail service.

10. SOUTHEASTERN ROUTE—AUTUMN:

Richmond, Va., Tuesday, October 7.
Raleigh, N. C., Thursday, October 9.
Charleston, S. C., Saturday, October 11.
Savannah, Ga., Tuesday, October 14.
Jacksonville, Fla., Thursday, October 16.
Macon, Ga., Saturday, October 18.
Columbia, S. C., Tuesday, October 21.
Charlotte, N. C., Thursday, October 23.

11. WESTERN AND PACIFIC ROUTE—AUTUMN:

Salina, Kans., Thursday, September 11.
Colby, Kans., Saturday, September 13.
Denver, Colo., Tuesday, September 16.
Pueblo, Colo., Thursday, September 18.
Salt Lake City, Utah, Monday, September 22.
Carson City, Nev., Thursday, September 25.
Sacramento, Cal., Saturday, September 27.
San Francisco, Cal., Tuesday, September 30.
Los Angeles, Cal., Friday, October 3.
Tucson, Ariz., Tuesday, October 7.
Albuquerque, N. Mex., Friday, October 10.
Garden City, Kans., Monday, October 13.
Newton, Kans., Wednesday, October 15.
Topeka, Kans., Friday, October 17.
Kansas City, Mo., Monday, October 20, departmental service.
Kansas City, Mo., Tuesday, October 21, railway mail service.

12. NORTHWESTERN ROUTE—AUTUMN:

Buffalo, N. Y., Thursday, October 16, departmental service.
Buffalo, N. Y., Friday, October 17, railway mail service.
Cleveland, Ohio, Monday, October 20, departmental service.
Cleveland, Ohio, Tuesday, October 21, railway mail service.
Toledo, Ohio, Thursday, October 23.
Detroit, Mich., Saturday, October 25.
Lansing, Mich., Tuesday, October 28.
Chicago, Ill., Thursday, October 30, departmental service.
Chicago, Ill., Friday, October 31, railway mail service.
Milwaukee, Wis., Monday, November 3.
Madison, Wis., Wednesday, November 5.
Dubuque, Iowa, Friday, November 7.
St. Paul, Minn., Monday, November 10.
Mankato, Minn., Wednesday, November 12.
Aberdeen, S. Dak., Friday, November 14.
Omaha, Nebr., Monday, November 17, departmental service.
Omaha, Nebr., Tuesday, November 18, railway mail service.
Des Moines, Iowa, Thursday, November 20, departmental service.
Des Moines, Iowa, Friday, November 21, railway mail service.
Indianapolis, Ind., Monday, November 24, departmental service.
Indianapolis, Ind., Tuesday, November 25, railway mail service.
Columbus, Ohio, Thursday, November 27, departmental service.
Columbus, Ohio, Friday, November 28, railway mail service.

INSTRUCTIONS TO APPLICANTS WHO WISH TO ENTER THE CLASSIFIED CIVIL SERVICE OF THE UNITED STATES IN THE DEPARTMENTS AT WASHINGTON, WITH INFORMATION AS TO THE CHANCES OF APPOINTMENT.

NOTE.—The Commission can not undertake to answer inquiries as to vacancies in the service, duties, salaries, prospects of promotion, or as to the course of preparation which applicants should follow, or inquiries relating to cases which are not officially before it for decision; nor can it decide, except in the cases of actual applicants, questions respecting the application of the rules. Where no exceptions are specified in the circular none are allowed. Particular answers can not be given to inquiries which are answered herein directly or by implication. The applicant may save the Commission and himself time and trouble by carefully reading this circular and preserving it for reference, particularly as to the method of certification and the chances of receiving an appointment.

The *classified service* for which examinations are required is divided into four distinct branches: (1) The *Departmental Service* at Washington; (2) the *Customs Service;* (3) the *Postal Service;* and (4) the *Railway Mail Service.* The following instructions apply only to the Departmental Service.

The Classified Departmental Service includes the eight Executive Departments, the Civil Service Commission, and the Department of Labor, and embraces all the officers, clerks, and other employés in these departments, except those appointed by the President by and with the advice and consent of the Senate, and those employed merely as messengers, watchmen, workmen, or laborers.

APPLICANTS.

Every one seeking to be examined must first file an application upon an official blank, of which there are three forms, one for the Departmental or Railway Mail Service, one for the Postal, and one for the Customs Service. Persons seeking positions in the Customs or Postal Service should apply in person or by letter to the "Secretary of Board of Civil Service Examiners" at the post-office or custom-house which they wish to enter for the blank form of application and circular of instructions for that branch of the service. The blank application for the Departmental or Railway Mail Service should be requested directly of the United States Civil Service Commission, Washington, D. C.

No person can be examined for the Departmental Service who is not a citizen of the United States, or who is under twenty years of age. There is no maximum limitation of age.

No person who is an applicant for examination or who is an eligible for any other branch of the classified service—Customs, Postal, or Railway Mail—can at the same time be an applicant for examination for the Departmental Service. The examinations for these four branches of the service are so unlike that no examination for one of them makes a person eligible for any of the others.

No person serving in the Army or Navy can be examined until the written consent of the head of the Department under which he is enlisted shall have been communicated to the Commission.

No person habitually using intoxicating beverages to excess can be appointed.

No discrimination is allowed on the ground of political or religious opinions.

No person dismissed from the public service for delinquency or misconduct, and no person who has failed to receive the absolute (*i. e.* permanent) appointment after probation can be examined within one year from the date of separation from the service.

TIMES AND PLACES OF EXAMINATION.

Every applicant will be furnished with a schedule from which he may select the time and place for his examination, and a slip on which he should note his selection; the "slip" should be forwarded with his application to the Commission. Upon approval of the application an admission card will be sent. If the applicant can not attend the examination at the time and place first selected he may select another time and place and notify the Commission as before. No new admission card will be sent, as the first card will be good for any examination selected within a year from the date thereof. Requests for examinations at other than schedule dates and places can not be granted.

EXAMINATIONS.

The Clerk and Copyist Examinations.—For ordinary positions in the departmental service either the clerk or copyist examination may be taken. Those who pass the copyist examination are eligible to positions of $900 or less, and those who pass the clerk examination are eligible to positions of $1,000 or more. No person can be an applicant or be eligible for both the clerk and copyist examination at the same time. Persons who pass the clerk examination may, if they express their willingness in writing, have their names entered also on the copyist register for certification to positions paying less than $1,000. Applicants must be careful to specify in their applications the *kind* of examination desired. The subjects of the copyist examination are: Orthography, penmanship, copying, and arithmetic (fundamental rules, fractions, and percentage). The subjects of the clerk examination are: Orthography, penmanship, copying, letter-writing, elements of the English language, arithmetic (fundamental rules, fractions, percentage, interest, and discount), elements of book-keeping, and elements of the geography, history, and Government of the United States. A good handwriting is important to success.

Supplementary Examinations.—For places requiring technical qualifications supplementary examinations are held which are open only to those who have taken either the clerk or the copyist examination. Persons who apply for the clerk or copyist examination may, in answer to question 14 of the application blank, specify one or more of the supplementary examinations, no separate application for them being required. The principal "supplementary" examinations are: Type-writing, stenography, law, medical science, modern languages (French, German, Italian, Spanish, and Swedish), proof-reading, and telegraphy. A person passing in any one of these subjects, who has passed the clerk or copyist examination, is placed upon a separate register and may be appointed therefrom.

The examination in type-writing consists of four subjects, all of which are practic tests. 1. Tabulating—arranging in tabular form certain data given in the questi 2. Transcribing rough draft. 3. An exercise intended to test the applicant's kno edge of the use and adjustment of the machine. 4. A dictation, in which time is important element. The applicant should be able to write accurately at least twen five words per minute. The time allowed for the examination is three and one h hours.

The stenography examination consists of *two exercises in dictation*, to be written stenographic characters and transcribed into long-hand. One of the dictation ex cises is a selection from a speech, and the other is a letter, the two exercises conta ing not less than five hundred words. The transcript will be compared with t printed text from which the dictation was given, and charges are made for the om sion, addition, or substitution of words, and for errors in spelling, punctuation, a capitalization. An important element in this examination is *speed* in writing wo in stenographic characters. It is practically useless for one to attempt the exami tion who can not write accurately more than eighty-five words a minute.

The examination in modern languages consists of two exercises—one the transl ing from English into the foreign language; the other the translating from the f eign language into English.

The proof-reading examination includes practical questions and three practical te in correcting proof.

The telegraphy examination embraces practical questions and practical tests in ceiving and transmitting messages. This examination can be taken only in Wa ington.

Special Examinations.—Special examinations are held for places requiring spe qualifications. An applicant may take one or more special examinations in addi to the clerk or copyist, but a separate application must be filed for each "speci examination. The most common "specials" are: Book-keeper; special or medical aminer in the Bureau of Pensions; assistant examiner of the Patent Office; inspec in the Post-Office Department; drafting (mechanical, architectural, or topographic State Department; copying of drawings, meteorological clerk (Signal Office); to graphic aid (Geological Survey). Persons desiring to take "special" examinat are not required to take any other examination as a basis, each "special" being c plete in itself.

The subjects of the principal special examinations are as follows:

Special Pension Examiner: Orthography, penmanship, copying, letter-writing, ar metic, elements of geography, history, and government of the United States, l (evidence, marriage and divorce), and pension law. *Medical Examiner:* Orthogra penmanship, copying, arithmetic, anatomy, physiology, chemistry, materia med therapeutics, general pathology, and theory and practice of medicine, surgery, m ical jurisprudence, and hygiene. *State Department:* Orthography, penmanship, c ing, letter-writing, elements of the English language, arithmetic, geography, history; law (international), and law (government). *Book-keeping:* Orthogra penmanship, copying, letter-writing, arithmetic, book-keeping (theoretical q tions), and book-keeping (practical). *Post-office Inspector:* Orthography, penm ship, copying, description of persons, writing letters and reports, arithmetic, ments of accounts, United States geography, government, postal laws and reg tions. *Meteorologic Clerk:* Orthography, penmanship, copying, letter-writing, ar metic, meteorology and use of meteorologic tables. *Topgraphic Aid for the Geolog Survey:* Letter-writing, algebra, geometry, plane trigonometry, surveying, geod astronomy, and topographic drawing. *Fourth Assistant Examiner for the Patent Of* Physics, technics, mathematics, chemistry, and the reading of mechanical drawi

Persons taking supplementary or special examinations in addition to the clerk copyist examination may take such examinations on the day following the date na in the schedule (except in Washington), provided they have not sufficient time t so on the schedule date. The book-keeper examination will occupy two days

parts of two days—the dictation exercise and the technical sheets, to which seven hours will be allowed, to be taken on the schedule date, and the remaining sheets, to which five hours will be allowed, to be taken on the day following, or on Monday if the schedule date falls on Saturday. In Washington separate dates are fixed for the different kinds of examination.

The examinations will commence at 9 o'clock a. m., and will not continue later than 7 p. m. All applicants must be present promptly at the hour of commencing.

Persons taking the type-writing examination must provide themselves with type-writer machines, and those taking the book-keeper, drafting, or other examinations requiring the use of implements, must furnish the implements required. All applicants will be expected to provide themselves with pens, pen-holders, pencils, erasers, ink, and scratch paper.

The time allowed for each kind of examination will be as follows:

For the copyist examination, five hours; clerk, special pension examiner, medical examiner, fourth assistant examiner, clerk State Department, meteorological clerk, and topographic aid, seven hours each; post-office inspector, eight hours; railway mail clerk, six hours; type-writing, three and one-half hours; stenography, one and one-half hours; modern languages, two hours for each language; law, three hours; proof-reading, four hours; drafting (mechanical, topographical, or architectural), nine hours; copying of drawings, six hours.

No allowance will be made for time spent out of the examination room for lunch or other purposes, and no allowance will be made for time lost in the examination room.

It is necessary to obtain a general average of seventy per centum (applicants entitled to preference under section 1754, U. S. R. S., because of honorable discharge from the military or naval service for disability resulting from wounds or sickness incurred in the line of duty, need obtain but sixty-five) to be eligible for appointment.

A notice of standing will be sent to each person examined, whether he passes or fails. These notices will be sent as soon as practicable after the papers are marked.

RE-EXAMINATIONS.

Persons failing to pass an examination may, after six months from the date of their failure, file new applications and be re-examined. No person who has passed an examination shall, while eligible on the register supplied by such examination, be re-examined.

Re-examinations other than as specified above can be had only by permission of the Commission; and such permission will be given only in exceptional cases where the applicant was incapable of doing himself justice on account of sickness or other good cause, and then only upon affidavit of the facts.

WHEN MAY AN APPOINTMENT BE EXPECTED.

The name of each applicant who passes the clerk or copyist examination at the required grade will be entered upon the register of eligibles of the State of his legal residence for certification for appointment from that State in the order of his grade. Applicants who have passed the clerk examination take their chance of getting at first a $1,200 or only a $1,000 place, as must those who have passed the copyist examination take the chance of getting a $900, or only one of the $840, $720, or even lower places. But admission is usually at the grades of $1,000 and $900. When there is a vacancy to be filled from the clerk or copyist registers, the Commission certifies from the eligible register of the State then having the smallest share of appointments in proportion to its population the names of the three persons graded highest of the sex and grade called for, and from the three a selection is made. The applicant must remember that the examination, if it shows the requisite capacity, will only entitle him to be placed on the register of those eligible for appointment, and to be certified, in his turn, to the appointing officer when a vacancy shall occur, and when his State is reached in the order of apportionment.

For a vacancy to be filled from a special or supplementary register the three persons of the sex named graded highest must be certified without regard to States, except that where a State has received a certain percentage of excess of its share of appointments, persons from that State can not be certified until such excess ceases. There is an increasing demand by the Departments for persons qualified as typewriters and stenographers for appointment to the ordinary clerk and copyist places, at the salaries attached to those places; type writers and stenographers as such, except in very limited numbers, not being provided for in the appropriation acts. Persons examined in these subjects must therefore understand that they will be certified to those places as occasion requires. What is true of type-writers and stenographers is also true to a considerable extent of book-keepers law clerks, draftsmen, proof-readers, translators, etc.

The time of examination is not considered in making certifications, as the highest in grade on the register must be certified first, although they may not have been the first examined. No name can be certified more than three times to the same Department. Persons honorably discharged from the military or naval service of the United States *by reason of disability*, resulting from wounds or sickness incurred in the line of duty are given preference in certification. No prediction will be made of the time or probability of an appointment. Each applicant by his examination decides his own standing and hence his own chances of an early appointment. Most of the examinations are common for all the places in each of the Departments at Washington for which they are appropriate, and an applicant can not know to which Department his name may be certified. Each name remains eligible on the clerk and copyist registers one year from the date of its entry thereon after the marking is completed unless the person is sooner appointed, and on the special and supplementary registers two years.

By taking a supplementary examination the applicant adds to the chance of appointment to a place requiring only ordinary clerical qualification the chance of appointment to a place requiring in addition to those qualifications the knowledge or skill tested by the supplementary examination. An eligible may, upon his request in writing, be certified from the supplementary register only. An eligible who is on a clerk or copyist and also on a supplementary register may be certified from either, and if appointed from the clerk or copyist register will remain eligible on the special register; but if appointed from the special register will be dropped from all other registers. Places of substitutes are filled in the same manner as regular places. By accepting a place of substitute an applicant does not lose any right of certification for a regular place.

An eligible who declines an appointment tendered him will not again be certified unless he shall request in writing the benefit of the remaining certifications which the rules allow.

The Government, through the examinations, promises no one an appointment. The very fact that the Commission first certifies the most competent on the registers implies that the least competent will be last taken, and hence will have the longest to wait, if indeed they are taken at all. As the competition under the clerk and the copyist examination in the departmental service is practically between applicants from the same State, it is obvious that the greater the numbers who compete in any State the smaller the chances for an appointment. By carefully studying the facts presented in this circular each applicant will be able to see for himself what his chances of appointment are. In several States these chances have been much reduced by the excessive numbers of the applicants. The experience which the Commission has had in the last seven years has been so uniform that the chances in the future can be estimated from a study of what has occurred in the past.

Men Clerks and Copyists.—If the applicant is seeking to be examined for a clerk or copyist place in the departmental service he should first inform himself from the following table of the number of persons already eligible and waiting appointment, and of the number of persons from his State appointed during one year.

This will show the applicant whether there are great numbers before him and what the aggregate needs of the Departments are; in other words, it will give him a rough idea of his chances for appointment.

The following table shows (1) the numbers eligible under the clerk examination May 15, 1890; and (2) the number appointed in the year ended May 15, 1890, under the examination. The chances on the copyist list are much the same, as there are both fewer eligibles on and fewer appointments from the copyist register.

CLERK EXAMINATION (MALES).*

State.	Number eligible May 15, 1890.	Number appointed in year ended May 15, 1890.	State.	Number eligible May 15, 1890.	Number appointed in year ended May 15, 1890.
Alabama	4	4	Missouri	22	2
Arizona	1	0	*Montana*	1	0
Arkansas	8	5	Nebraska	9	0
California	5	3	Nevada	0	0
Colorado	1	0	New Hampshire	4	0
Connecticut	9	0	New Jersey	16	7
Dakota†	7	0	*New Mexico*	1	0
Delaware	4	0	New York	67	0
District of Columbia	0	0	North Carolina	10	0
Florida	4	0	Ohio	118	0
Georgia	4	4	Oregon	3	0
Idaho	0	0	Pennsylvania	98	2
Illinois	57	0	Rhode Island	2	1
Indiana	94	0	South Carolina	3	4
Indian Territory	1	0	Tennessee	19	7
Iowa	19	4	Texas	9	4
Kansas	35	0	Utah	1	1
Kentucky	14	7	Vermont	4	0
Louisiana	0	1	*Virginia*	20	0
Maine	10	0	*Washington*	0	0
Maryland	25	0	West Virginia	14	0
Massachusetts	21	3	Wisconsin	18	4
Michigan	37	7	*Wyoming*	0	0
Minnesota	12	1			
Mississippi	7	4	Total	818	75

*Exclusive of preference claimants, § 1754, R. S.
†Not divided into North and South Dakota until Eleventh Census.

NOTE.—The States which have had such an excess of their share of appointments as to be excluded from certification from the clerk, copyist, special, and supplementary registers, except female copyist registers, are indicated by *italics*.

The great disparity between the number examined and the number appointed shows the keenness of the competition on these registers and makes it evident that none of those applying have any chance unless they pass at an exceptionally high standard. Of the 639 men who passed the clerk examination during the year ended June 30, 1889, only 65 were appointed. The proportion of appointments, however, to those who pass varies greatly in different States. Thus in that year 7 men passed the clerk examination from Arkansas and 3 were appointed; 2 from Louisiana and 2 appointed; 6 from Mississippi and 4 appointed; 7 from Georgia and 3 appointed; 8 from Texas and 7 appointed. Thus from these five States 30 passed and 19 were appointed. On the other hand, from Indiana 73 passed and none were appointed; from Virginia 18 passed and none were appointed; from Illinois 45 passed and none were appointed; from Ohio 95 passed and none were appointed; from Maryland 24 passed and none were appointed. From these five States 255 men passed the clerk examination and none were appointed. No appointments have been made of men from the clerk and copyist registers of Maryland and Virginia since 1884, and the chances of any applicant from these States are very small. Since July 1, 1887, the lowest standing reached for an appointment under the clerk examination from Indiana, Ohio, Pennsylvania, and Illinois, was 88. These figures are partly explained by the need

of making an apportionment which has been equitably maintained with respect to most of the States, although, of course, not with mathematical exactness. A few of the States and nearly all the Territories have received relatively an excessive share of appointment as compared with the other States. This is notably the case with respect to Maryland, Virginia, and the States and Territories indicated in italics in the table and the District of Columbia, and has resulted from a necessity of examining and certifying for appointment to places requiring special or technical knowledge or skill such persons as offered themselves after due public notice, without regard to their places of legal residence. Such persons have been found relatively in larger numbers in Maryland, Virginia, Indiana, Ohio, Illinois, and the District of Columbia than elsewhere. The States which in the above table appear to have had no clerk appointments or only a small share have supplied persons from the special and supplementary registers in great numbers and in this way have secured their full share, and in some cases more than their full share of all the appointments made. These same States also send large numbers into the clerk and copyist examinations, appointments under which can not be made because of the unavoidable confinement of appointments from those States to the special places.

Appointments from Special and Supplementary Examinations.—In the departmental service, counting all the examinations, 22 per cent. of those that pass, or more than one in five, receive appointment. But the proportions vary greatly on the different registers. Some of the special and supplementary registers requiring a high order of ability are with difficulty kept full. Thus in 1889 14 men passed as Patent Office examiners, every one of whom with ten examined in 1888 was appointed. For stenographer and type-writer 11 men passed and 11 were appointed. For stenographer 6 men passed and 5 were appointed. For type-writer 26 men passed and 17 were appointed, and the remaining 9 were only kept out because their States had received an excessive share of appointments. For special pension examiner 91 passed and 43 were appointed. Thus in many of these cases the Commission finds it difficult to keep the lists as full as they ought to be and the same is the case, as already shown, in the registers of the Gulf States requiring only ordinary clerical ability on the part of the applicant. For some of the places filled through the supplementary and special examinations there has been an excessive number of applicants. On May 15, 1890, there were eligible on the register of post-office inspectors 175 persons, while only 17 were appointed in the year preceding; for law clerks 27 eligible and none appointed; female translators in French, 15 eligible and none appointed; in German, 8 eligible and none appointed; female type-writers, 106 eligible and 20 appointed; male bookkeepers, 18 eligible and 4 appointed. For the supplementary and special registers for which no figures are given there have been few applicants and few appointments.

Women Copyists.—The number of women applicants is greatly in excess of the needs of the service. Appointments of women under the clerk examination are very rare and none have been appointed in two years. The number who passed the copyist examination during the year ended June 30, 1889, was 625, of whom only 23 received appointment. In the preceding year only 14 were appointed. A separate apportionment is made of female copyist appointments, and if appointments should be made in the year to end May 15, 1891, in the same ratio as in the year ended May 15, 1890, the States and Territories from which no appointments would be made would be Arkansas, California, Colorado, Connecticut, Dakota, Delaware, District of Columbia, Florida, Indiana, Indian Territory, Kentucky, Louisiana, Maine, Maryland, Massachusetts, Minnesota, Montana, Nebraska, New Hampshire, Rhode Island, Vermont, West Virginia, and Wyoming. New York and Pennsylvania would receive two each and the remaining States and Territories one each.

RECOMMENDATIONS.

There is no need of seeking the aid of any prominent or presumably influential person to secure an application paper or an examination. No recommendation or certificate, besides those provided for in the official blanks, will be received or can be

of any use in securing an examination or a certification for an appointment. Time spent in attempts to change the order of certification will be lost. Neither the Commission nor any examiner can help any one to get an appointment, and they have nothing to do with the choice by the appointing officer from those certified.

ABSOLUTE APPOINTMENTS.

Every appointment is made for a probationary period of six months, at the full salary attached to the position, at the end of which time, if the conduct and capacity of the person appointed have been found satisfactory, the appointment is made absolute.

FALSE STATEMENTS.

An eligible who has made a false statement in his application, or who has been guilty of fraud or deceit in any matter connected with his application or examination, or who has been guilty of a crime or of infamous or notoriously disgraceful conduct, may be excluded from certification.

REMOVALS.

The authority and duty of removal are left undisturbed by the civil-service act and rules, except that a removal can not legally be made because a person in the service has refused to be coerced in his political action, or has refused to contribute money for political purposes, or has refused to render political service. In making any reduction of force in the classified service those persons must be retained who, being equally qualified, have been honorably discharged from the military or naval service of the United States.

RE-INSTATEMENT.

Upon requisition of the head of a Department the Commission will certify for reinstatement in that Department in a grade or class no higher than that in which he was formerly employed, any person who, within one year next preceding the date of the requisition, has, through no delinquency or misconduct, been separated from the classified service of that Department. The limit of one year does not apply to persons honorably discharged from the military or naval service in the United States in the late war of the Rebellion. Service as a substitute is not ground for re-instatement.

In writing to the Commission the applicant should give the number of his application, the branch of the service and kind of examination, and the State of his legal residence.

CHARLES LYMAN,
President.

Address all communications:
U. S. CIVIL SERVICE COMMISSION,
Washington, D. C

TABLE 1.—*Showing number of applications for examinations for the*

	Legal residence of applicants.	General.							Special.					
		Copyist.			Clerk.			Total copyists and clerk.	Law clerk, Judge-Advocate-General's Office.	Bookkeeper.		Pension Office.		
		Male.	Female.	Total copyist.	Male.	Female.	Total clerk.			Male.	Female.	Principal examiner.	Special examiner.	Medical examiner.
1	Alabama	12	9	21	9	.....	9	30	.....	.....	1	.....	3	.....
2	Alaska	.....	1	1	.....	.....	.....	1	.....	.....	.....	.....	.....	.....
3	Arizona	1	.....	1	2	.....	2	3	.....	1	.....	.....	.....	1
4	Arkansas	4	.....	4	12	.....	12	16	1	.....	.....	.....	.....	.....
5	California	3	4	7	8	.....	8	15	.....	1	.....	.....	.....	1
6	Colorado	1	2	3	4	.....	4	7	.....	.....	1	.....	1	1
7	Connecticut	5	15	20	13	.....	13	33	.....	1	1	.....	4	.....
8	Dakota	.....	6	6	.....	.....	.....	6	.....	1	1	.....	2	.....
9	Delaware	2	5	7	6	2	8	15	.....	.....	1	.....	1	.....
10	Dist. of Columbia	2	3	5	1	.....	1	6	1	.....	.....	.....	.....	.....
11	Florida	4	5	9	5	.....	5	14	.....	2	.....	.....	1	.....
12	Georgia	11	14	25	18	.....	18	43	1	1	.....	.....	1	.....
13	Idaho	.....	1	1	.....	.....	.....	1	.....	.....	.....	.....	1	.....
14	Indian Territory	.....	1	1	.....	.....	.....	1	.....	.....	.....	.....	.....	.....
15	Illinois	26	40	66	88	7	95	161	.....	5	4	1	73	2
16	Indiana	60	48	108	151	12	163	271	1	9	.....	.....	90	5
17	Iowa	12	18	30	30	3	33	63	.....	1	.....	1	40	1
18	Kansas	17	14	31	44	2	46	77	2	.....	.....	.....	36	1
19	Kentucky	16	22	38	28	5	33	71	2	4	.....	.....	17	1
20	Louisiana	.....	2	2	5	.....	5	7	.....	.....	.....	.....	1	.....
21	Maine	3	9	12	20	1	21	33	.....	.....	.....	.....	10	.....
22	Maryland	42	82	124	49	5	54	178	.....	8	3	.....	6	4
23	Massachusetts	10	27	37	32	6	38	75	1	2	1	1	6	.....
24	Michigan	14	25	39	43	2	45	84	2	2	2	1	25	2
25	Minnesota	7	8	15	15	.....	15	30	.....	1	.....	1	4	1
26	Mississippi	15	4	19	19	2	21	40	.....	1	.....	1	4	.....
27	Missouri	11	11	22	40	6	46	68	.....	1	.....	1	34	1
28	Montana	2	1	3	1	.....	1	4	.....	.....	.....	.....	.....	.....
29	Nebraska	1	9	10	11	.....	11	21	.....	.....	.....	1	8	.....
30	Nevada	.....	2	2	.....	.....	.....	2	.....	.....	.....	.....	.....	.....
31	New Hampshire	.....	6	6	12	1	13	19	1	.....	.....	.....	3	.....
32	New Jersey	13	24	37	22	3	25	62	.....	1	.....	.....	3	.....
33	New Mexico	.....	.....	.....	.....	.....	.....	.....	.....	.....	.....	.....	1	.....
34	New York	41	107	148	99	24	123	271	2	9	3	2	32	3
35	North Carolina	18	15	33	18	.....	18	51	1	4	.....	.....	4	.....
36	Ohio	59	67	126	158	11	169	295	2	11	.....	.....	86	4
37	Oregon	.....	.....	.....	2	.....	2	2	.....	.....	.....	.....	7	.....
38	Pennsylvania	57	102	159	137	7	144	303	2	5	2	1	29	4
39	Rhode Island	3	2	5	1	.....	1	6	.....	.....	1	.....	1	1
40	South Carolina	12	12	24	13	1	14	38	1	.....	1	.....	1	3
41	Tennessee	19	14	33	36	1	37	70	1	3	.....	.....	9	1
42	Texas	7	10	17	19	.....	19	36	.....	2	.....	.....	4	.....
43	Utah	.....	1	1	.....	.....	.....	1	.....	.....	.....	.....	.....	.....
44	Vermont	2	5	7	12	6	18	25	.....	1	.....	.....	4	.....
45	Virginia	57	86	143	41	.....	41	184	.....	4	2	1	5	4
46	Washington	1	.....	1	1	.....	1	2	.....	.....	.....	.....	.....	.....
47	West Virginia	12	17	29	15	3	18	47	.....	3	1	.....	9	1
48	Wisconsin	3	17	20	22	.....	22	42	.....	.....	.....	.....	6	.....
49	Wyoming	.....	1	1	2	.....	2	3	.....	.....	.....	.....	.....	.....
	Total	585	874	1,459	1,264	110	1,374	2,833	21	83	25	12	572	41

In this table where the sex is not indicated all are males, except as follows, viz: 1 applicant for the position of principal pension examiner from Illinois; 1 for clerk, State Department, from Ohio; 1 for special pension examiner from Pennsylvania; 1 for ornithological draughtsman, Department of Agriculture, from Minnesota; 1 for computer, Nautical Almanac Office, from Indiana.

classified departmental service filed during the year ended June 30, 1889.

Special.																
Clerk, State Department.	Assistant examiner, Patent Office.	Inspector, Post-Office Department.	Topographic draftsman.	Patent Office.			Architectural draftsman.			Tracer, Supervising Architect's Office.		Paleontologic draftsman, Geological Survey.		Ornithological (zoological) draftsman, Department of Agriculture.		
				Copyist of mechanical drawings.		Mechanical draftsman.	For all branches departmental service.	Supervising Architect's Office.	Quartermaster-General's Office.	Male.	Female.	Male.	Female.			
				Male.	Female.											
	1															1
																2
																3
		1														4
	1	13			1											5
																6
	6	5														7
1		2														8
		1														9
												3				10
		4														11
		5														12
																13
																14
	2	37						1								15
1	1	30				1										16
	1	18														17
		20			2			1	1		1		1			18
	1	10		1							1					19
	1															20
		3														21
1	4	2	2					1	2	2						22
	6	7	5		1		1	4			1					23
	1	10														24
	1	5													1	25
		3														26
	4	10									1					27
		3														28
		4				1										29
																30
	1	4	1													31
		4				1		2								32
																33
	13	21	5			1	1	8	2	1	1					34
	1	3	1	1												35
1	3	34				1	1	1				1				36
																37
1	3	24	2	1				3		1						38
	1															39
		3				1										40
		10	1		1						1					41
	2	11														42
		2														43
	1	2														44
	1	13			1		1					1				45
																46
	1	12						1	1							47
1		10							1							48
		1														49
6	57	347	17	3	6	6	4	22	7	4	6	5	1	1		

TABLE 1.—*Showing number of applications for examinations for the classified*

	Legal residence of applicants.	Special.												
		Supervising Architect's Office.			Quartermaster-General's Office.		Computer.				Topographic aid, Geological Survey.	Assistant astronomer, Naval Observatory.	Proof-reader, Geological Survey, Interior Department.
		Constructor in metal.	Sanitary expert.	Heating and ventilating expert.	Civil engineer.	Assistant civil engineer.	Naval Observatory.	Nautical Almanac.	Coast and Geodetic Survey.	Ordnance Bureau, War Department.			
1	Alabama				1								
2	Alaska												
3	Arizona												
4	Arkansas						1						
5	California												
6	Colorado									1			
7	Connecticut				1								
8	Dakota												
9	Delaware												
10	Dist. of Columbia							1					
11	Florida												
12	Georgia												
13	Idaho												
14	Indian Territory												
15	Illinois		1				1	1	1	2			
16	Indiana				1			1					
17	Iowa				1								
18	Kansas				1								
19	Kentucky												
20	Louisiana												
21	Maine												
22	Maryland				1			1	1			1	1
23	Massachusetts	2	1	1	5	2	1	1	1	4		1	
24	Michigan				1			1					1
25	Minnesota							1					1
26	Mississippi						1						
27	Missouri							1				1	
28	Montana												
29	Nebraska												
30	Nevada												
31	New Hampshire				1			1					
32	New Jersey				1			1					
33	New Mexico												
34	New York	1		1	3	2	1	1	1	1			1
35	North Carolina												2
36	Ohio					1							
37	Oregon												
38	Pennsylvania	2		1	4		1						
39	Rhode Island												
40	South Carolina					1							
41	Tennessee				1		1						1
42	Texas						1						
43	Utah												
44	Vermont												
45	Virginia				1		1		2		1		2
46	Washington												
47	West Virginia							1					
48	Wisconsin							1					
49	Wyoming												
	Total	5	2	3	23	6	9	13	6	8	1	3	9

departmental service filed during the year ended June 30, 1889—Continued.

Special.																	
Department of Agriculture.									Cranialogical expert, Surgeon-General's Office.	Meteorological clerk, Signal Office.	Navy Department.		Bureau of Engraving and Printing.		Total—Specials.	
Assistant chemist.	Vegetable pathologist.	Editor and clerk (experimental station).	Translator.		Botanist and botanical assistant.		Botanical microscopist.				Expert in naval science and affairs, War Records Office.	Expert in nautical science, Hydrographic Office.	Skilled helper.	Printers' assistant.		
			Male.	Female.	Male.	Female.	Male.	Female.								
															6	1
																2
															2	3
															3	4
														2	19	5
		2													4	6
														2	22	7
															7	8
			2	1								1	21	1	4	9
														96	126	10
															7	11
															8	12
															1	13
																14
	1				1									2	135	15
					1									3	144	16
															63	17
															66	18
													1	1	39	19
															2	20
							1								14	21
2				1								1	2	15	61	22
1									1					1	58	23
						1		1							50	24
															16	25
															10	26
															54	27
															3	28
															14	29
																30
														1	13	31
1														1	15	32
															1	33
		2	1							1			1	8	129	34
1												1	3	3	25	35
1		1												3	151	36
		1													8	37
				1	1		1							4	93	38
															4	39
														1	11	40
											1	1		1	33	41
															20	42
															2	43
												1			10	44
1		2								1			2	18	62	45
																46
															29	47
														1	20	48
															1	49
7	1	8	3	3	3	1	2	1	1	1	1	5	30	164	1,565	

TABLE 1.—*Showing number of applications for examinations for the classified*

	Legal residence of applicants.	Non-competitive.														
		Special Departmental, Rule II. Substitutes.				General Rule III, ¶ 2 (c).				General Rule III, ¶ 2 (c).						
		Copyist.		Clerk.		Copyist.		Clerk.						Treasury Department.		
		Male.	Female.	Male.	Female.	Male.	Female.	Male.	Female.	Special agent, Department of Labor.	Store-keeper, Treasury Department.	Nautical expert, Hydrographic Station.	Superintendent of building, Pension Office.	Foreman of laborers.	Captain of watch.	Lieutenant of watch.
1	Alabama						1									
2	Alaska															
3	Arizona															
4	Arkansas															
5	California						1					1				
6	Colorado						1									
7	Connecticut															
8	Dakota															
9	Delaware															
10	Dist. of Columbia		1			5	2	1	1							
11	Florida															
12	Georgia						1									
13	Idaho															
14	Indian Territory															
15	Illinois															
16	Indiana															
17	Iowa															
18	Kansas					1		1								
19	Kentucky					1						1				
20	Louisiana						1									
21	Maine															
22	Maryland					2	2									
23	Massachusetts															
24	Michigan															
25	Minnesota															
26	Mississippi					1	1									
27	Missouri					2				1						
28	Montana															
29	Nebraska															
30	Nevada															
31	New Hampshire							1								
32	New Jersey				1											
33	New Mexico															
34	New York	1				2	2				1					1
35	North Carolina		1				2					1				
36	Ohio					1										
37	Oregon															
38	Pennsylvania		1			3					1				1	
39	Rhode Island															
40	South Carolina					1										
41	Tennessee						3					1				
42	Texas															
43	Utah															
44	Vermont											1				
45	Virginia					4	1									
46	Washington															
47	West Virginia						3									
48	Wisconsin												1	1		
49	Wyoming															
	Total	1	3		1	23	21	3	1	1	2	5	1	1	1	1

departmental service filed during the year ended June 30, 1889—Continued.

Non-competitive.																			
General Rule III, ¶ 2 (*c*).																			
Departmental.						Money counter, Treasurer's Office, Treasury Department.		Model attendant, Patent Office.				Interior Department.			Clerk, General Rule III, ¶ 2 (*b*).	Total—Non-competitive.	Aggregate.	Canceled.	
Presser, Department of Agriculture.	Steam engineer.	Assistant steam engineer.	Fireman.	Steam and electric engineer.	Skilled laborer.	Male.	Female.	Copyist.		Clerk.		Assistant disbursing clerk.	Returns clerk.	Assistant photographer.					
								Male.	Female.	Male.	Female.								
																1	37	3	1
																	1		2
																	5		3
						1											19	2	4
																3	37	4	5
							1									1	12		6
																1	56	1	7
																	13	2	8
																	19		9
1	1		3				1					1		1	1	19	151	18	10
									1							2	53	3	11
																	2		12
																	1		13
									1	1					3	5	301	9	14
															1	1	416	14	15
																	126	2	16
																2	145	4	17
													1			3	113	4	18
																1	10	2	19
																	47	1	20
		1	1				1									7	246	18	21
	1				1										1	3	136	6	22
		1				1										2	136	5	23
					1											1	47	3	24
																3	52	2	25
																3	125	3	26
																	7		27
																	35	1	28
																	2		29
																1	33	1	30
																1	78	1	31
																	1		32
			1						1		1					10	410	21	33
				2												4	80	4	34
																3	449	9	35
																	10		36
									1						1	8	404	14	37
																	10	1	38
																1	50	4	39
																4	107	4	40
																	56	3	41
																	3		42
																1	36	3	43
															1	6	252	17	44
																	2	1	45
																3	79	3	46
		1							1							4	66		47
																	4		48
1	2	3	5	2	2	2	3		4	2	1	1	1	1	8	103	4,501	199	49

The total number of applications filed during the year, including those cancelled, was 4,700.

Applications were canceled for the following reasons, viz: 75 applicants under age; 3 over age; 8 not citizens of the United States; 18 on request of the applicants; 11 applicants already in the departmental service; 9 duplicate applications; 47 failure of applicants to complete applications, and 28 applicants previously dismissed from service for misconduct.

TABLE 2.—*Showing numbers of applications for examination for the Railway Mail Service filed during the year ended June 30, 1889.*

Legal residence of applicant.	Approved.	Canceled.	Legal residence of applicant.	Approved.	Canceled.
Alabama	43	10	Missouri	174	10
Arizona			Montana	1	6
Arkansas	34	4	Nebraska	80	10
California	14	1	Nevada	2	
Colorado	24	2	New Hampshire	24	2
Connecticut	32	6	New Jersey	25	5
Dakota	33	5	New Mexico	5	
Delaware	2		New York	188	18
District of Columbia	11		North Carolina	46	
Florida	30	2	Ohio	507	55
Georgia	97	3	Oregon	13	10
Idaho	4		Pennsylvania	195	28
Indian Territory	1		Rhode Island	6	
Illinois	366	46	South Carolina	40	6
Indiana	454	52	Tennessee	84	6
Iowa	281	38	Texas	78	6
Kansas	227	29	Utah		
Kentucky	41	8	Vermont	23	5
Louisiana	19	2	Virginia	37	1
Maine	79	11	Washington	11	1
Maryland	22	2	West Virginia	39	3
Massachusetts	98	11	Wisconsin	54	7
Michigan	191	20	Wyoming	7	1
Minnesota	82	13			
Mississippi	37	3	Total	3,861	450

Applications were canceled for the following reasons, viz: 376 applicants over age; 9 under age; 12 on request of applicants; 4 applicants already in Railway Mail Service; 3 applicants previously dismissed from service for misconduct; 3 applicants not citizens of the United States, and 42 incomplete applications.

The total number of applications filed during the year, including those which were canceled, was 4,311.

TABLE 3.—*Showing the number examined for the Railway Mail Service, the number that passed and that failed, and the legal residence, average age, and education, during the year ended June* 30, 1889.

[The civil-service rules were applied to the Railway Mail Service to take effect May 1, 1889, and the first examination was held February 27, 1889. The period covered by this report is therefore only about four months.]

Legal residence.	Examined.	Passed.							Failed.						
		Number.	Average age.	Education.					Number.	Average age.	Education.				
				Common school.	Academic.	Business college.	High school.	Collegiate.			Common school.	Academic.	Business college.	High school.	Collegiate.
Alabama	53	20	26+	7	3	1	6	3	33	27—	11	5	1	11	5
Arizona															
Arkansas	35	19	26+	6	2	1	3	5	16	28	6	3	....	4	3
California	12	11	28	3	1	....	3	4	1	33	1	....	....	....	....
Colorado	15	13	29—	4	1	....	5	3	2	33+	1	....	....	1	....
Connecticut	28	22	25	11	4	....	7	....	6	25+	2	2	2	....	....
Dakota	17	14	30+	4	1	4	5	....	3	24+	2	....	....	1	....
Delaware	1	1	22	....	....	....	1	....	....	....	....	....	....	....	....
District of Columbia	10	9	24—	3	2	2	....	2	1	20	....	....	1	....	....
Florida	15	7	26—	3	1	1	....	2	8	26+	2	1	2	2	1
Georgia	54	24	25	6	4	....	4	10	30	28+	9	2	2	9	8
Idaho	2	1	34	1	....	....	....	....	1	20	1	....	....	....	....
Illinois	217	185	25+	67	12	19	54	33	32	28+	23	1	3	5	....
Indiana	296	269	26+	84	49	25	64	47	27	30+	17	1	....	7	2
Iowa	178	147	25+	38	7	17	62	23	31	25+	10	3	2	10	6
Kansas	89	82	25+	27	9	5	28	13	7	24+	5	....	....	1	1
Kentucky	15	13	25	3	....	2	5	3	2	22+	1	....	....	1	....
Louisiana	19	11	25—	1	....	1	2	7	8	27—	3	1	1	....	3
Maine	52	39	26—	10	1	5	18	5	13	30	6	1	1	4	1
Maryland	9	5	28+	1	2	....	2	....	4	23+	3	....	....	1	....
Massachusetts	72	65	26+	27	4	7	23	4	7	30—	4	....	....	3	....
Michigan	75	69	26+	20	6	6	29	8	6	27+	1	2	....	3	....
Minnesota	44	32	27—	10	2	1	18	1	12	28—	6	3	1	1	1
Mississippi	19	9	26+	3	1	....	1	4	10	27—	5	....	....	2	3
Missouri	78	62	25—	14	7	7	13	21	16	27+	7	3	3	3	....
Montana	7	6	26	2	....	2	1	1	1	36	1	....	....	....	....
Nebraska	44	37	26+	10	5	3	13	6	7	28—	3	....	3	1	....
Nevada	1	1	23	1	....	....	....	....	....	....	....	....	....	....	....
New Hampshire	14	12	28	2	3	2	5	....	2	27	....	1	1	....	....
New Jersey	13	10	28+	4	3	3	....	....	3	28+	3	....	....	....	....
New Mexico	4	3	23—	3	....	....	....	....	1	23	1	....	....	....	....
New York	90	82	26—	29	21	11	17	4	8	28	5	1	....	2	....
North Carolina	23	14	21+	1	6	....	1	6	9	28—	5	2	....	....	2
Ohio	327	276	26—	84	31	25	90	46	51	28+	28	1	7	9	6
Oregon	23	21	30—	9	2	5	2	3	2	26	1	..	....	....	1
Pennsylvania	65	55	26—	21	14	4	14	2	10	29+	2	3	1	3	1
Rhode Island	4	4	28—	1	....	....	2	1	....	....	....	....	....	....	....
South Carolina	27	12	27+	1	2	....	2	7	15	29—	8	1	....	3	3
Tennessee	67	43	27—	11	8	2	11	11	24	27	12	5	....	2	5
Texas	38	29	24—	9	....	1	8	11	9	24+	2	1	1	3	2
Utah	1	1	28	....	....	....	....	1	....	....	....	....	....	....	....
Vermont	18	15	25+	4	6	....	5	....	3	26—	2	1	....	....	....
Virginia	6	5	24+	2	1	1	1	....	1	23	1	....	....	....	....
Washington	11	9	28—	1	1	....	2	5	2	26—	2	....	....	....	....
West Virginia	24	14	24+	5	2	1	5	1	10	26+	5	....	....	4	1
Wisconsin	17	17	26+	8	....	....	5	4	....	....	....	....	....	....	....
Wyoming	7	7	28	2	....	1	4	....	....	....	....	....	....	....	....
Total	2,236	1,802	26—	565	224	165	541	307	434	27+	207	44	32	96	55

During the period covered by this report two persons were examined for transfer under the provisions of clause (a), section 1, Railway Mail Rule V, both of whom passed.

TABLE 4.—*Showing the dates and places of examinations for the departmental and for the Railway Mail Service, the number of competitors in each examination, and the number that passed and that failed in each examination, during the year ended June 30, 1889.*

State.	City.	Date.	Departmental service.															Railway mail service.		
			Copyist.					Clerk.					Special.							
			Passed.		Failed.		Total.	Passed.		Failed.		Total.	Passed.		Failed.		Total.	Grand total.	Passed.	Failed.	Total.
			Male.	Fem.	Male.	Fem.		Male.	Fem.	Male.	Fem.		Male.	Fem.	Male.	Fem.					
Alabama	Montgomery	Oct. 1, 1888	1				1											1			
Do	Mobile	Feb. 21, 1889	1	1			2	1				1						3			
Do	Birmingham	Mar. 14, 1889	4	2			6	1				1			1		1	8			
Do	do	May 7, 1889																	2	1	3
Do	Mobile	May 7, 1889*																			
Do	Montgomery	May 7, 1889																		1	1
Do	Birmingham	June 20, 1889																	6	5	11
Do	do	June 25, 1889																	5	4	9
Do	Mobile	June 20, 1889																	2	4	6
Do	Montgomery	June 20, 1889																	1	9	10
Do	do	June 24, 1889																	8	8	16
Arizona	Tucson	Oct. 16, 1888*																			
Do	do	June 14, 1889*																			
Arkansas	Little Rock	Sept. 10, 11, 1888		1			1	3				3						4			
Do	Texarkana	Mar. 7, 1889																	1	1	2
Do	Little Rock	Mar. 21, 1889						2				2						2		2	2
Do	Fort Smith	Mar. 23, 1889	1				1	1		1		2						3			
Do	do	May 7, 1889																	4		4
Do	Little Rock	May 7, 1889																	3	3	6
Do	Fort Smith	June 20, 1889																	3	4	7
Do	Little Rock	June 20, 1889																	11	8	19
Do	Texarkana	June 20, 1889*																			
California	San Francisco	Sept. 4, 1888											1				1	1			
Do	Sacramento	Oct. 3, 1888*																			
Do	San Francisco	Oct. 6, 1888						2				2						2			
Do	Los Angeles	Oct. 11, 1888						1				1			1		1	2			
Do	do	Mar. 9, 1889																			
Do	do	May 10, 1889																	2		2
Do	San Francisco	May 10, 1889																	1		1
Do	do	May 10, 1889						2				2	2		4		6	8	9	1	10
Do	do	Mar. 9, 1889*																			
Colorado	Denver	Sept. 21, 1888	1				1	1	1	1		3						4			
Do	Pueblo	Sept. 24, 1888	2				1											1			
Do	Denver	Mar. 9, 1889																	3		3

Do	do	June 12, 1889																	7	1	8
Connecticut	New Haven	Oct. 9, 1888	1	3		1	5	1		2		3			1		1	9			
Do	do	Mar. 7, 1889*																			
Do	Hartford	Mar. 7, 1889																	3		3
Do	New Haven	May 8, 1889		3			3	3				3			7		7	13	12	5	17
Do	Hartford	May 28, 1889	2	3		1	6			5		5	4		1		5	16	17	1	18
Dakota	Yankton	Nov. 30, 1888		1			1								1		1	2			
Do	do	Mar. 7, 1889																	4		4
Do	Fargo	Apr. 18, 1889																		1	1
Do	Bismarck	Apr. 20, 1889																		1	1
Do	Yankton	May 8, 1889*																			
Do	Bismarck	June 12, 1889																	3	1	4
Do	Fargo	June 12, 1889																	4	1	5
Do	Yankton	June 12, 1889																	1		1
Delaware	Wilmington	Aug. 15, 16, 1888		1			1	1		1		2		1			1	4			
Do	do	June 12, 1889																	3		3
Dist. of Columbia	Washington	July 2, 1888		1			1		1			1						2			
Do	do	July 6, 1888		1			1								1			1			
Do	do	July 9, 1888															1	1			
Do	do	July 14, 1888											19		27	6	52	52			
Do	do	July 16, 1888											3		3	1	7	7			
Do	do	July 23, 1888							1			1						1			
Do	do	July 28, 1888											15		4		19	19			
Do	do	July 30, 1888						1				1			1		1	2			
Do	do	Aug. 6, 1888		1	1		2			1		1	2				2	5			
Do	do	Aug. 13, 1888	2		2		4	1		1		2						6			
Do	do	Aug. 14, 1888											2				2	2			
Do	do	Aug. 20, 1888	2				2						2				2	4			
Do	do	Aug. 27, 1888						1				1						1			
Do	do	Aug. 31, 1888													2		2	2			
Do	do	Sept. 1, 1888											5				5	5			
Do	do	Sept. 3, 1888						1				1						1			
Do	do	Sept. 4, 5, 1888	12	50	6	17	25	20	1	8		29	1				1	115			
Do	do	Sept. 6, 1888	1				1	1				1						2			
Do	do	Sept. 8, 10, 1888											1				1	1			
Do	do	Sept. 10, 1888		1	1	1	3	1				1	3		5		8	12			
Do	do	Sept. 17, 1888	1				1											1			
Do	do	Sept. 24, 1888	2				2		1	2		3						5			
Do	do	Sept. 27, 1888	1				1											1			
Do	do	Oct. 1, 1888	3	1	1		5			1		1						6			
Do	do	Oct. 4, 1888											1				1	1			
Do	do	Oct. 8, 12, 1888	1		1		2											2			
Do	do	Oct. 12, 1888						1				1						1			
Do	do	Oct. 13, 1888											15		18	7	40	40			
Do	do	Oct. 15, 1888		1			1								3		3	4			
Do	do	Oct. 18, 19, 1888													1		1	1			
Do	do	Oct. 22, 23, 1888				1	1		1			1	1				1	3			
Do	do	Oct. 29, 31, 1888		1	1		2	1			1	2	3		5		8	12			
Do	do	Nov. 5, 1888	1				1	1				1	2	1			9	5			

* No candidates appeared.

TABLE 4.—*Showing the dates and places of examinations for the departmental and for the Railway Mail Service, etc.*—Continued.

State.	City.	Date.	Departmental service.																Railway mail service.		
			Copyist.					Clerk.					Special.								
			Passed.		Failed.		Total.	Passed.		Failed.		Total.	Passed.		Failed.		Total.	Grand total.	Passed.	Failed.	Total.
			Male.	Fem.	Male.	Fem.		Male.	Fem.	Male.	Fem.		Male.	Fem.	Male.	Fem.					
Dist. of Columbia.	Washington...	Nov. 12, 13, 1888	.....	.....	.....	1	1	1	.....	.....	.....	1	.....	.....	.....	.....	.....	2	.....	.....	.....
Do	...do	Nov. 19, 23, 1888	.....	.....	.....	.....	.....	.....	.....	.....	.....	.....	8	.....	15	.....	23	23	.....	.....	.....
Do	...do	Nov. 23, 1888	.....	.....	.....	.....	.....	.....	.....	.....	.....	.....	.....	57	.....	33	90	90	.....	.....	.....
Do	...do	Nov. 26, 1888	.....	.....	.....	.....	.....	1	.....	.....	.....	1	.....	.....	1	.....	1	2	.....	.....	.....
Do	...do	Dec. 4, 1888	27	60	12	21	129	19	1	17	1	38	.....	.....	.....	.....	.....	167	.....	.....	.....
Do	...do	Dec. 7, 1888	.....	.....	.....	.....	.....	1	.....	.....	.....	1	.....	.....	.....	.....	.....	1	.....	.....	.....
Do	...do	Dec. 11, 1888	.....	.....	1	.....	1	.....	.....	.....	.....	.....	.....	.....	.....	.....	.....	1	.....	.....	.....
Do	...do	Dec. 17, 1888	4	4	1	2	11	3	2	.....	.....	5	1	.....	.....	.....	1	17	.....	.....	.....
Do	...do	Dec. 20, 1888	.....	.....	.....	.....	.....	.....	.....	.....	.....	.....	.....	.....	2	.....	2	2	.....	.....	.....
Do	...do	Dec. 24, 1888	.....	2	.....	.....	2	.....	1	.....	.....	1	.....	.....	.....	.....	.....	3	.....	.....	.....
Do	...do	Dec. 26, 29, 1888	.....	.....	.....	.....	.....	.....	.....	.....	.....	.....	1	.....	3	.....	4	4	.....	.....	.....
Do	...do	Dec. 31, 1888	.....	.....	1	2	3	.....	1	.....	.....	1	.....	.....	.....	.....	.....	4	.....	.....	.....
Do	...do	Jan. 7, 1889	.....	.....	.....	.....	.....	.....	1	.....	.....	1	.....	.....	.....	.....	.....	1	.....	.....	.....
Do	...do	Jan. 8, 9, 1889	3	.....	.....	.....	3	.....	.....	.....	.....	.....	11	1	30	5	47	50	.....	.....	.....
Do	...do	Jan. 14, 16, 1889	.....	2	.....	.....	2	.....	.....	.....	.....	.....	4	.....	5	2	11	13	.....	.....	.....
Do	...do	Jan. 18, 19, 1889	.....	.....	.....	.....	.....	.....	.....	.....	.....	.....	1	.....	1	.....	2	2	.....	.....	.....
Do	...do	Jan. 21, 1889	.....	1	.....	.....	1	.....	1	1	.....	2	.....	.....	.....	.....	.....	3	.....	.....	.....
Do	...do	Jan. 28, 1889	.....	1	.....	.....	1	1	1	1	.....	3	.....	.....	.....	.....	.....	4	.....	.....	.....
Do	...do	Feb. 4, 1889	.....	.....	.....	.....	.....	.....	1	1	.....	2	.....	.....	.....	.....	.....	2	.....	.....	.....
Do	...do	Feb. 11, 1889	.....	.....	.....	2	2	1	1	.....	1	3	1	.....	.....	.....	1	6	.....	.....	.....
Do	...do	Feb. 18, 1889	.....	3	1	1	5	1	.....	.....	.....	1	.....	.....	.....	.....	.....	6	.....	.....	.....
Do	...do	Feb. 19, 20, 1889	.....	.....	.....	.....	.....	.....	.....	.....	.....	.....	2	.....	2	.....	4	4	.....	.....	.....
Do	...do	Feb. 25, 27, 1889	.....	4	.....	.....	4	.....	1	1	.....	2	2	.....	8	.....	10	16	.....	.....	.....
Do	...do	Mar. 1, 1889	.....	.....	.....	1	1	.....	.....	.....	.....	.....	.....	.....	.....	.....	.....	1	.....	.....	.....
Do	...do	Mar. 2, 1889	3	5	.....	3	11	.....	1	.....	.....	1	2	1	.....	.....	3	15	.....	.....	.....
Do	...do	Mar. 5, 6, 1889	19	89	23	43	174	32	3	20	2	57	.....	.....	.....	.....	.....	231	.....	.....	.....
Do	...do	Mar. 7, 1889	.....	.....	.....	.....	.....	.....	.....	1	.....	1	.....	.....	.....	.....	.....	1	13	7	20
Do	...do	Mar. 11, 1889	1	.....	.....	.....	1	1	.....	.....	.....	1	1	.....	.....	.....	1	3	.....	.....	.....
Do	...do	Mar. 16, 1889	.....	1	.....	.....	1	.....	.....	.....	.....	.....	1	.....	.....	.....	1	2	.....	.....	.....
Do	...do	Mar. 25, 1889	.....	.....	.....	.....	.....	.....	1	.....	.....	1	.....	.....	.....	.....	.....	1	.....	.....	.....
Do	...do	Mar. 26, 1889	.....	1	.....	.....	1	.....	.....	.....	.....	.....	.....	.....	.....	.....	.....	1	.....	.....	.....
Do	...do	Mar. 28, 1889	.....	.....	.....	.....	.....	.....	1	.....	.....	1	.....	.....	.....	.....	.....	1	.....	.....	.....
Do	...do	Apr. 1, 2, 1889	1	.....	.....	1	2	.....	.....	.....	.....	.....	.....	4	3	4	11	13	.....	.....	.....
Do	...do	Apr. 8, 1889	1	.....	2	1	4	.....	.....	1	.....	1	.....	.....	.....	.....	.....	5	.....	.....	.....
Do	...do	Apr. 9, 1889	.....	.....	.....	.....	.....	.....	.....	1	.....	1	15	.....	33	1	49	50	.....	.....	.....

Do	do	Apr. 15, 1889	1			1	2							43		18			61	61			
Do	do	Apr. 20, 1889			1		1						1	1					1	2			
Do	do	Apr. 22, 1889						1					1	2					2	3			
Do	do	Apr. 23, 1889												1					1	1			
Do	do	Apr. 24, 1889					2	4		1	1	6				1			1	9			
Do	do	Apr. 29, 1889		2				2			1	3				1			1	4			
Do	do	May 6, 1889																			12	3	15
Do	do	May 7, 1889												1		1			2	2			
Do	do	May 13, 1889												1					1	2			
Do	do	May 20, 1889				1	1						2	1					1	3			
Do	do	May 27, 1889						1		1													
Do	do	May 28, 29, 1889												4	3				7	7			
Do	do	May 31, 1889												6					6	6			
Do	do	June 3, 1889							2				2							2			
Do	do	June 4, 5, 1889	35	119	36	62	252	49	5	19	2	75								327	3		3
Do	do	June 10, 1889		1			1	1		1		2				1			1	4			
Do	do	June 17, 1889		1			1	1				1								2			
Do	do	June 19, 1889												28	54	7	5	94	94				
Do	do	June 24, 1889			1		1	1	2			3		1					1	5			
Do	do	June 28, 29, 1889												7		2			9	9			
Florida	Jacksonville	Oct. 10, 1888*																					
Do	do	Feb. 18, 1889	1	1			2	1				1								3			
Do	do	Mar. 7, 1889																			1		1
Do	do	May 7, 1889																			1		1
Do	do	June 12, 1889																			5	7	12
Georgia	Atlanta	Oct. 3, 1888	*1	1	2	1	5	3		1		4								9			
Do	Savannah	Oct. 9, 1888†																					
Do	Macon	Oct. 13, 1888						1		1		2				1			1	3			
Do	Savannah	Feb. 7, 8, 1889		1			1								1				1	2			
Do	Macon	Feb. 9, 1889		1	2		3	2		1		3								6			
Do	Atlanta	Mar. 7, 1889																			2		2
Do	do	May 7, 1889																			3	3	6
Do	Macon	May 7, 1889																			1		1
Do	Savannah	May 7, 1889																				1	1
Do	Atlanta	June 12, 1889																			7	7	14
Do	Macon	June 12, 1889																			4	11	15
Do	Savannah	June 12, 1889																			4	7	11
Illinois	Springfield	Sept. 4, 1888	2	1	1	1	5	1		1		2	2			1			3	10			
Do	Chicago	Nov. 15, 16, 1888	2	5	2		9	4	1			5				2			2	16			
Do	do	Nov. 19, 22, 1888												4		4			8	8			
Do	do	Apr. 23, 1889												1		2			3	3			
Do	do	Feb. 9, 1889									1	1								1			
Do	do	Mar. 7, 1889																			22	3	25
Do	Springfield	Mar. 7, 1889					1														14	2	16
Do	Cairo	Apr. 4, 1889	1											1		4		5	6	16	3	19
Do	Chicago	Apr. 5, 6, 1889	2	5	1	2	10	17	2	11		30	2			10		12	52	10	5	15
Do	Bloomington	May 31, 1889		1		4	5	13		9		22	9	2		32	1	44	71	96	17	113
Indiana	Indianapolis	Dec. 8, 1888	5	1	1	2	9	8	2	6	2	18	4			3		7	34				
Do	do	Mar. 7, 1889																		74	8	82	

*Canceled—yellow fever.

†No candidates appeared.

TABLE 4.—*Showing the dates and places of examinations for the departmental and for the Railway Mail Service, etc.*—Continued.

State.	City.	Date.	Departmental service.															Railway mail service.		
			Copyist.					Clerk.					Special.							
			Passed.		Failed.		Total.	Passed.		Failed.		Total.	Passed.		Failed.		Total.	Grand total.	Passed.	Failed.	Total.
			Male.	Fem.	Male.	Fem.		Male.	Fem.	Male.	Fem.		Male.	Fem.	Male.	Fem.					
Indiana	Fort Wayne	Mar. 26, 1889																	14	1	15
Do	do	Mar. 28, 1889	6		2	1	9	9	1	3	1	14			2		2	25	20	4	24
Do	Evansville	Apr. 9, 1889	3	1	4	1	9	15		11	2	28	1		8		9	46	15	5	20
Do	La Fayette	June 3, 1889		6		2	8	6		1		7	6		7		13	28	38	3	41
Do	Indianapolis	June 6, 1889	6	10	4	3	23	19		21		40	12		63		75	138	139	10	149
Iowa	Dubuque	Nov. 23, 1888	1				1	1		1		2						3			
Do	Des Moines	Dec. 5, 1888						1	1			2			1		1	3			
Do	do	Mar. 7, 1889																	37	4	41
Do	do	May 25, 1889		2	2		4	10		4		14	7		25		32	50	74	24	98
Do	Davenport	May 28, 1889		1	3		4	4		1	1	6	9		20		29	39	29	8	37
Idaho	Boisé City	June 14, 1889																	1	1	2
Kansas	Garden City	Oct. 20, 1888	1		1		2											2			
Do	Newton	Oct. 22, 1888			2		2	3	1	2		6						8			
Do	Topeka	Oct. 24, 1888	1				1								3		3	4			
Do	Garden City	May 7, 1889																	2		2
Do	Newton	May 7, 1889																	21	1	22
Do	Topeka	May 7, 1889																	12	3	15
Kentucky	Louisville	Aug. 30, 1888	1	1	1	1	4	2		2		4			2		2	10			
Do	do	Nov. 23, 1888											1				1	1			
Do	Catlettsburgh	Mar. 7, 1889			1		1	2		2	1	5			5		5	11	1		1
Do	Louisville	Mar. 7, 1889																	9		9
Do	Lexington	Mar. 9, 1889			1		1	3		2		5			1		1	7			
Do	Louisville	Mar. 12, 1889	4	1	1	4	10	8	2	5	1	16	2		3		5	31			
Do	Bowling Green	Mar. 14, 1889		1			1	1		2		3						4	2		2
Do	Paducah	Apr. 6, 1889	1		2		3	2				2			3		3	8	2	3	5
Louisiana	Shreveport	Sept. 18, 1888								1		1			1		1	2			
Do	New Orleans	Sept. 27, 1888																			
Do	do	Feb. 23, 1889		1			1	1				1						2			
Do	do	Mar. 7, 1889																			
Do	Shreveport	Mar. 9, 1889													1		1	1			
Do	New Orleans	May 7, 1889																	1	2	3
Do	do	June 12, 1889																	11	6	17
Do	Shreveport	June 12, 1889																			
Maine	Portland	Sept. 27, 1888								1		1			1		1	2			
Do	Bangor	Sept. 29, 1888			1		1			1		1			1		1	2			

Do	do	Mar. 7, 1889																	1		1
Do	Portland	Mar. 7, 1889																	4	2	6
Do	Bangor	May 3, 1889																	10	6	16
Do	Portland	May 3, 1889																	14	4	18
Do	Bangor	May 13, 1889																	1		1
Do	Portland	May 17, 1889		4		4	6		3		8	3		5		8	20		7	1	8
Maryland	Baltimore	Aug. 13, 14, 1888	4	18	3	2	22	4		3		7	4		3		7	36			
Do	Hagerstown	Jan. 12, 1889	2	1	1		4	4		3		7			1		1	12			
Do	Baltimore	Jan. 15, 1889	3	15	5	4	27	6		4		10	3		2		5	42			
Massachusetts	Boston	Oct. 4, 1888	4	5			9	4	1	1		6	2				2	17			
Do	do	Nov. 19, 22, 1888													5		5	5			
Do	do	Dec. 26, 28, 1888											1		8		9	9			
Do	do	Mar. 7, 1889																	14		14
Do	do	Apr. 23, 1889																			
Do	Worcester	May 3, 1889																	2		2
Do	Springfield	May 3, 1889																	7	1	8
Do	Boston	May 13, 1889		10	2	1	18	18	3	2		18	2		7	1	10	41	24	7	31
Do	Springfield	May 25, 1889	1	3			4	7		1		8	1		5		6	18	21	1	22
Do	Boston	June 14, 1889																	1		1
Do	Worcester	June 15, 1889																	1		1
Michigan	Detroit	Nov. 9, 10, 1888	1		1	1	3	2				2			1	1	2	7			
Do	Lansing	Nov. 12, 1888	1	2			3	3		2		5			1		1	9			
Do	Detroit	Mar. 7, 1889																	16	2	18
Do	do	Mar. 21, 1889		4		1	5	3	1	5		9			1		1	15			
Do	Lansing	Mar. 23, 1889	1	2	1	1	5	5				5			2		2	12	13		13
Do	Grand Rapids	Mar. 26, 1889	3				3	6		1		7			1		1	11	11	2	13
Do	Detroit	Apr. 23, 1889											1				1	1			
Minnesota	St. Paul	Nov. 26, 1888		1	1		2	2		1		3	1		1		2	7			
Do	Mankato	Nov. 28, 1888	2				2											2			
Do	St. Paul	Mar. 7, 1889																	17	6	23
Do	do	Apr. 13, 1889	2	1		1	4	12				12			1		1	17	21	5	26
Do	Brainerd	Apr. 16, 1889																	1	1	2
Mississippi	Oxford	Sept. 13, 1888			2		2	3		1		4						6			
Do	Jackson	Sept. 15, 1888	2	1	2		5	2	1	1	1	5			1		1	11			
Do	Vicksburg	Mar. 12, 1889	3		1		4											4			
Do	Jackson	May 7, 1889																	1	1	2
Do	Vicksburg	May 7, 1889																		1	1
Do	Jackson	June 12, 1889																	2	5	7
Do	Oxford	June 12, 1889																	2	1	3
Do	Vicksburg	June 12, 1889																	1	1	2
Missouri	St. Louis	Sept. 1, 1888	1	2			3	5		1		6			3		3	12			
Do	Kansas City	Oct. 26, 1888	1		1	1	3	2		2		4			2		2	9			
Do	St. Louis	Nov. 19, 24, 1888											2		1		3	3			
Do	Kansas City	Mar. 7, 1889																	32	4	36
Do	St. Louis	Mar. 7, 1889																	16	4	20
Do	Springfield	Mar. 26, 1889						3		2		5	1		2		3	8	7	1	8
Do	Kansas City	Mar. 28, 1889	3	4	1	1	9	13	2	3		18			11		11	38	12	1	13
Do	Moberly	Mar. 30, 1889						4				4	1				1	5	10	1	11
Do	St. Louis	Apr. 2, 1889	3	3	1	2	9	10	1	4		15			3		3	27	2	1	3

*No candidates appeared.

TABLE 4.—*Showing the dates and places of examinations for the departmental and for the Railway Mail Service, etc.*—Continued.

State.	City.	Date.	Departmental service.																Railway mail service.		
			Copyist.					Clerk.					Special.								
			Passed.		Failed.		Total.	Passed.		Failed.		Total.	Passed.		Failed.		Total.	Grand total.	Passed.	Failed.	Total.
			Male.	Fem.	Male.	Fem.		Male.	Fem.	Male.	Fem.		Male.	Fem.	Male.	Fem.					
Missouri	Kansas City	May 7, 1889											1				1	1	22	4	26
Do	St. Louis	June 12, 1889								1		1						1			
Montana	Miles City	Apr. 23, 1889			2		2											2	1		1
Do	Helena	Apr. 25, 1889						1				1						1	2		2
Do	do	June 14, 1889																	4	1	5
Do	Miles City	June 18, 1889																	1		1
Nebraska	Omaha	Dec. 3, 1888	1	1			2	6		1		7			1		1	10			
Do	do	Mar. 7, 1889																	12		12
Do	Lincoln	May 21, 1889		5			5	5	1	1		7	5		7		12	24	22	1	23
Do	Omaha	May 23, 1889	1	3	3	1	8	5		3		8	5		8		13	29	20	6	26
Nevada	Carson City	Oct. 1, 1888*																			
Do	do	June 14, 1889																	1		1
New Hampshire	Portsmouth	Oct. 2, 1888*																			
Do	Concord	Mar. 7, 1889*																			
Do	do	May 3, 1889																	3	1	3
Do	do	May 15, 1889		1			1	4				4	2		1		3	8	2		2
New Jersey	Trenton	May 3, 1889	3	10	4	1	18	9		3		12			5		5	35	8		8
New Mexico	Albuquerque	Oct. 18, 1888						1				1						1			
Do	do	June 14, 1889																	3	2	5
New York	New York	Sept. 1, 1888											1				1	1			
Do	Albany	Sept. 18, 1888	2	8	1	1	12	1		2		3			2		2	17			
Do	Syracuse	Sept. 20, 1888	1	3			4	8	2			10			2		2	16			
Do	Ogdensburgh	Sept. 22, 1888		1			1			1		1						2			
Do	New York	Oct. 11, 1888	3	4	1		8	5		3		8			6		6	22			
Do	Buffalo	Nov. 2, 1888		3			3	7	2	1		10						13			
Do	New York	Nov. 19, 22, 1888											6		8		14	14			
Do	do	Dec. 26, 28, 1888											2		3		5	5			
Do	Albany	Mar. 7, 1889																	1		1
Do	Buffalo	Mar. 7, 1889																	10	2	12
Do	New York	Mar. 7, 1889																	8	1	9
Do	Rochester	Mar. 7, 1889																	13		13
Do	Syracuse	Mar. 7, 1889																	7		7
Do	Rochester	Mar. 16, 1889																			

Do	New York	Apr. 23, 1889*																				
Do	do	May 6, 7, 1889	6	21	7	4	38	13	3	12	3	31	1		12	1	14	83	30	4	34
Do	Rochester	June 26, 1889											1				1	1				
North Carolina	Goldsborough	Oct. 4, 1888	1	1			2			2		2						4				
Do	Charlotte	Oct. 18, 1888*						3		1		4	1		1		2	6				
Do	do	Nov. 9, 1888*																				
Do	Raleigh	Jan. 4, 5, 1889						1				1	1				1	2				
Do	Wilmington	Feb. 2, 1889								1		1						1				
Do	Charlotte	Feb. 14, 1889						2		1		3			1		1	4				
Do	do	May 7, 1889																	3	5	8	
Do	Goldsborough	May 7, 1889																	2	2	4	
Do	Raleigh	May 7, 1889																	5		5	
Ohio	Cincinnati	Aug. 28, 1888	5	6	3	3	17	7		3		10			6		6	33				
Do	Cleveland	Nov. 5, 1888		2		1	3	2		1		3			1		1	7				
Do	Toledo	Nov. 7, 1888		4			4	1		4		5			3		3	12				
Do	Columbus	Dec. 11, 1888	2				2	10	2		1	13	1		4		5	20				
Do	Cincinnati	Mar. 7, 1889																	15	2	17	
Do	Cleveland	Mar. 7, 1889																	26	4	30	
Do	Columbus	Mar. 7, 1889																	13	6	19	
Do	Toledo	Mar. 7, 1889																	13		13	
Do	do	Mar. 30, 1889	2	2			4	4	1	2		7	1		1		2	13	5	1	6	
Do	Cleveland	Apr. 2, 1889	2	2			4	10		1		11	2		3		5	20				
Do	Cincinnati	Apr. 11, 12, 1889	5	11	6	2	24	20	1	12	1	34	1		11		12	70	23	2	25	
Do	Cleveland	Apr. 2, 1889																	10	1	11	
Do	Cincinnati	June 4, 1889											1				1	1				
Do	Columbus	June 7, 1889	8	15	5	4	32	40	3	6		49	9		57		66	147	193	38	231	
Oregon	Portland	May 3, 1889						2				2	3		5		7	9	3		3	
Do	Roseburgh	May 6, 1889			1		1											1	1		1	
Do	Portland	June 14, 1889																	13	1	14	
Do	Roseburgh	June 20, 1889																	5	1	6	
Pennsylvania	Philadelphia	Aug. 17, 1888	2	8	1	2	13	12		3		15			3		3	31				
Do	Harrisburg	Aug. 20, 1888	1	1	3	1	6	12		3		14	1				1	21				
Do	Pittsburgh	Aug. 22, 1888			3		3	3		1		4			3		3	10				
Do	Harrisburg	Mar. 7, 1889																	15	2	17	
Do	Philadelphia	Mar. 7, 1889																	9	3	12	
Do	Pittsburgh	Mar. 7, 1889																	12	1	13	
Do	Philadelphia	Mar. 11, 12, 1889	7	14	5	2	28	16	5	5		26			4		4	58	1		1	
Do	Williamsport	Mar. 14, 1889			3		3	14		1	1	16	1		2		3	22	2	5	7	
Do	Philadelphia	Mar. 26, 1889						2				2						2				
Do	Pittsburgh	Apr. 4, 1889	6	5		2	13	6		7		13	1		4		5	31	6	1	7	
Rhode Island	Providence	Oct. 6, 7, 1888		1			1									1	1	2				
Do	do	Mar. 7, 1889*																				
Do	do	May 10, 1889	1				1	1				1			2		2	4	1		1	
Do	do	June 12, 1889																	1		1	
South Carolina	Charleston	Oct. 6, 1888		1			1	1				1						2				
Do	Columbia	Oct. 16, 17, 1888	2	1		1	4	1		1		2			1		1	7				
Do	Charleston	Feb. 5, 1889		2			2											2				
Do	Columbia	Feb. 12, 13, 1889	1				1	1		1		2	1				1	4				
Do	do	May 7, 1889																		1	1	

* No candidates appeared.

TABLE 4.—*Showing the dates and places of examinations for the departmental and for the Railway Mail Service, etc.*—Continued.

State.	City.	Date.	Departmental service.																Railway Mail Service.		
			Copyist.					Clerk.					Special.								
			Passed.		Failed.			Passed.		Failed.			Passed.		Failed.						
			Male.	Fem.	Male.	Fem.	Total.	Male.	Fem.	Male.	Fem.	Total.	Male.	Fem.	Male.	Fem.	Total.	Grand total.	Passed.	Failed.	Total.
South Carolina	Charleston	May 8, 1889																	1		1
Do	do	June 12, 1889																	2	4	6
Do	Columbia	June 12, 1889																	9	3	12
Do	do	June 14, 1889																	5	4	9
Tennessee	Nashville	Sept. 5, 1888			1		1	2				2						3			
Do	Memphis	Sept. 7, 1888		1	1		2			1		1						3			
Do	Nashville	Sept. 26, 1888													1		1	1			
Do	Chattanooga	Mar. 16, 1889		1			1	2				2						3	2	1	3
Do	Nashville	Mar. 16, 1889	2		1		3	3		1		4	1				1	8	2	1	3
Do	Knoxville	Mar. 19, 1889	2	3	2	1	8	3		1		4			1		1	13	5	3	8
Do	Memphis	Mar. 19, 1889		1	1		2	5		2	1	8			1		1	11	3	1	4
Do	Chattanooga	June 20–22, 1889																	28	14	42
Do	Memphis	June 20, 1889																	7	7	14
Texas	Dallas	Sept. 20, 21, 1888						2		2		4	1		1		2	6			
Do	San Antonio	Sept. 22, 1888		1			1											1			
Do	Houston	Sept. 25, 1888						1		1		2						2			
Do	do	Feb. 27, 1889																	1		1
Do	San Antonio	Mar. 1, 1889																	5	1	6
Do	Dallas	Mar. 5, 6, 1889		1			1	3				3	1				1	5	5		5
Do	do	June 21, 1889																	4	5	9
Do	San Antonio	June 20, 1889*																			
Do	Houston	June 22, 1889																	9	2	11
Utah	Salt Lake	Sept. 28, 1888*																			
Do	do	June 14, 1889																			
Vermont	Burlington	Sept. 25, 1888		1			1	1	1		1	3			2		2	6	1		1
Do	do	Mar. 7, 1889																			
Do	Rutland	Mar. 7, 1889																	1	1	2
Do	Burlington	May 3, 1889																	1		1
Do	Rutland	May 3, 1889*																	7	1	8
Do	Burlington	Mar. 21, 1889																			

Do	...do	May 7, 1889*																			
Washington	Spokane Falls	Apr. 27, 1888	1				1											1	2		2
Do	Seattle	May 1, 1889		1			1											1			
Do	...do	June 15, 1889																	5	2	7
Do	Spokane Falls	June 14, 1889																	1		1
West Virginia	Parkersburgh	Aug. 25, 1888		2			2	1				1						3			
Do	Martinsburgh	Jany. 10, 1889	2	1			3											3			
Do	Charleston	Mar. 5, 1889						3	1			4	1				1	5	1		1
Do	...do	June 13, 1889																	1	1	2
Do	Martinsburgh	June 12, 1889																	1	3	4
Do	Parkersburgh	June 12, 1889																	3		3
Wisconsin	Milwaukee	Nov. 17, 1888	1	1			2	2				2						4			
Do	Madison	Nov. 20, 1888						2				2						2			
Do	Milwaukee	Mar. 7, 1889																	4		4
Do	...do	Apr. 9, 1889		1	1		2	4				4			1		1	7	2		2
Do	Madison	Apr. 11, 1889	1	2		1	4	6				6	1				1	11	7		7
Do	Sturgeon Bay	May 10, 1889													1		1	1			
Wyoming	Cheyenne	Mar. 7, 1889																	4		4
Do	...do	Mar. 17, 1889		1			1						1		1		2	3	2	1	3
Do	...do	June 12, 1889																	3		3
Total			283	606	205	230	1,389	721	76	318	26	1,141	365	126	677	69	1,237	3,767	1,894	484	2,228

*No candidates appeared.

Including four examinations at Washington at which only supplementary subjects ere taken—none of which are reported in this table—provision was made for 394 xaminations in the year, so distributed that one examination at least might be held uring the year in each State and Territory, except the Indian Territory and Alaska.)ne examination, at Jacksonville, Fla., was canceled on account of the preva- ence of the yellow fever at that place. At twenty-three of the places designated or examinations no candidates appeared, but with six exceptions these were places ot provided for on the regular schedule, but were specially designated with the iew of securing lists of eligibles for the Railway Mail Service for certain States and 'erritories, notice of examinations at these places being necessarily given only a hort time prior to the dates fixed.

While the number of candidates from some States and for certain positions has een considerably in excess of the requirements of the service, in other States and for ther positions, especially for railway mail clerks, it has been found necessary to old several special examinations and advertise quite extensively in order to secure sufficient supply of eligibles. Of the three hundred and ninety-four examinations rovided for, ninety-three were held in Washington, D. C., at which sixteen hundred nd fifty-five persons were examined, or 27½ per cent. of the whole number—six housand and five—examined for the departmental and Railway Mail Service.

About one hundred persons in addition to those reported in the table, were exam- ned for departmental and Railway Mail Service, but their examinations were can- eled because they failed to file applications in accordance with the rules of the ommission. These rules require the filing of complete application papers before an xamination can be taken. At examinations held in places remote from Washington, owever, some persons have been admitted without regular applications on account f their misunderstanding of the rule and the hardship which would have been en- ailed upon them by a refusal to examine them. The papers of such persons have een marked and graded in the same manner as those of other candidates, their lentity not being known to the examiners. This has imposed an extra and needless mount of labor on the small working force of the commission. Repeated notices ave been sent to such candidates, urging them to forward proper applications and alling their attention to the rule of the commission on the subject. In several ases, especially for the Railway Mail Service, the candidates who failed to make or o complete formal applications have attained high averages, which would probably ave secured for them certification and appointment had they complied with the equirements of the rule.

There is an impression abroad that those who take examinations at Washington ave some advantage over those who take them elsewhere. In regard to the copyist nd the clerk examination this impression is not well founded, as the following tatement will show; but there seems to be some good ground for it with respect to the pecial examinations. This is probably due to the fact that very many of those who re examined here have better opportunities than those living elsewhere for acquir- ng a knowledge of those technical subjects which are required by the different epartments. In fact many of the candidates examined in Washington have been at ome time employed in the very positions for which they take examinations—they re old employés who are seeking to re-enter the service. The disparity is, however, artly accounted for by the fact that many persons away from Washington attempt he special pension examination with little or no knowledge of law, or of pension aw, and for that reason fail.

Examination.	Washington, D. C.				Other places.			
	Passed.	Failed.	Total.	Per cent. passed.	Passed.	Failed.	Total.	Per cent. passed.
Copyist	483	253	736	66 —	471	182	653	72 +
Clerk	181	88	269	67 +	616	256	872	71 —
Special	344	268	612	56 +	149	478	627	24 —

Twenty persons have secured places on the registers of eligibles through the preference allowed under section 1754, Revised Statutes, to soldiers and sailors honorably discharged by reason of disability resulting from wounds or sickness incurred in line of duty, whose averages on examination were below 70 per cent. but above 65 per cent., viz; 4 clerks, 4 copyists, 8 special pension examiners, 1 post-office inspector and 3 railway mail clerks.

TABLE 5.—*Showing the number examined for clerk and for copyist, departmental service, the number that passed and that failed, the legal residence, average age, and education, during the year ended June 30, 1889.*

Legal residence.	Copyist.																				
	Examined.			Passed.									Failed.								
								Education.									Education.				
	Male.	Female.	Total.	Male.	Female.	Total.	Average age.	Common school.	Academic.	Business college.	High school.	Collegiate.	Male.	Female.	Total.	Average age.	Common school.	Academic.	Business college.	High school.	Collegiate.
Alabama	7	7	14	5	5	10	27—	3	4	.....	3	.....	2	2	4	31—	2	2	.....	.....	.....
Alaska	.....	1	1	.....	1	1	21	1	.....	.....	.....	.....	.....	.....	.....	.....	.....	.....	.....	.....	.....
Arizona	1	.....	1	1	.....	1	25	1	.....	.....	.....	.....	.....	.....	.....	.....	.....	.....	.....	.....	.....
Arkansas	1	1	2	1	1	2	39	1	1	.....	.....	.....	.....	.....	.....	.....	.....	.....	.....	.....	.....
California	2	4	6	2	4	6	35	1	3	.....	1	1	.....	.....	.....	.....	.....	.....	.....	.....	.....
Colorado	1	1	2	1	1	2	29+	.....	.....	.....	2	.....	.....	.....	.....	.....	.....	.....	.....	.....	.....
Connecticut	4	12	16	4	10	14	26—	6	.....	1	6	1	.....	2	2	23+	2	.....	.....	.....	.....
Dakota	.....	4	4	.....	4	4	34+	.....	2	1	1	.....	.....	.....	.....	.....	.....	.....	.....	.....	.....
Delaware	2	3	5	2	3	5	33	2	1	.....	1	1	.....	.....	.....	.....	.....	.....	.....	.....	.....
District of Columbia	1	.....	1	1	.....	1	27	1	.....	.....	.....	.....	.....	.....	.....	.....	.....	.....	.....	.....	.....
Florida	2	3	5	2	3	5	29—	1	1	1	2	.....	.....	.....	.....	.....	.....	.....	.....	.....	.....
Georgia	8	13	21	4	7	11	32—	7	1	.....	1	2	4	6	10	31—	1	2	.....	3	4
Idaho	.....	1	1	.....	1	1	21	.....	.....	.....	1	.....	.....	.....	.....	.....	.....	.....	.....	.....	.....
Illinois	26	33	59	16	21	37	27+	10	6	3	11	7	10	12	22	35—	8	5	2	6	1
Indiana	26	50	86	24	33	57	29—	11	5	5	23	13	12	17	29	31—	8	7	2	10	2
Iowa	10	15	25	3	10	13	27+	2	1	2	8	.....	7	5	12	34—	4	1	2	1	4
Indian Territory	.....	1	1	.....	1	1	25	.....	1	.....	.....	.....	.....	.....	.....	.....	.....	.....	.....	.....	.....
Kansas	13	12	25	8	11	19	28	2	2	1	8	6	5	1	6	39	2	2	.....	.....	2
Kentucky	13	20	33	4	14	18	25—	3	5	1	8	1	9	6	15	33—	6	.....	2	3	4
Louisiana	.....	3	3	.....	3	3	38	1	1	.....	1	.....	.....	.....	.....	.....	.....	.....	.....	.....	.....
Maine	3	10	13	2	8	10	33+	1	2	.....	6	1	1	2	3	23—	1	.....	.....	2	.....
Maryland	34	86	120	14	55	69	28—	17	14	6	25	7	20	31	51	31—	14	10	6	13	8
Massachusetts	13	25	38	10	24	34	29—	5	2	.....	26	1	3	1	4	36	1	1	.....	1	1
Michigan	12	24	36	8	17	25	29—	5	2	5	10	3	4	7	11	37+	2	.....	1	5	3
Minnesota	8	8	16	6	6	12	30—	3	3	2	3	1	2	2	4	31	2	.....	.....	2	.....
Mississippi	10	5	15	5	3	8	30+	1	3	.....	1	3	5	2	7	32	3	.....	.....	.....	.....

Nebraska	1	9	10	1	8	9	31	2	1		4	2		1	1	41				1	
Nevada		1	1											1	1	31				1	
New Hampshire		5	5		3	3	36		1		2			2	2	30+				2	
New Jersey	10	24	34	6	23	29	28—	12	3		8	6	4	1	5	30	4			1	
New Mexico*																					
New York	34	102	136	21	82	103	29+	32	18	4	35	14	13	20	33	30+	12	11		7	3
North Carolina	12	14	26	4	13	17	28—	1	2	1	5	8	8	1	9	27+	3	1		2	2
Ohio	40	61	101	27	47	74	27+	17	4	9	21	23	13	14	27	33	9	3	1	7	7
Oregon	1		1										1		1	53				1	
Pennsylvania	46	97	143	19	78	97	28+	24	22	5	35	11	27	19	46	37	19	5	5	13	4
Rhode Island	2	3	5	2	3	5	26	2	1		2										
South Carolina	10	13	23	3	8	16	27—	4	1	1	5	5	2	5	7	30+	2		1	1	3
Tennessee	12	16	28	5	10	15	28+	2	5	1	4	3	7	6	13	30+	3	1		3	6
Texas	2	9	11	2	6	8	33+		1		4	3		3	3	30—	2	1			
Utah*																					
Vermont	1	6	7	1	5	6	23+	1	1		3	1		1	1	20				1	
Virginia	49	85	134	27	55	82	28+	28	16	2	26	10	22	30	52	30+	27	7	3	3	7
Washington	2	1	3	2	1	3	31+		2		1										
West Virginia	5	17	22	4	15	19	30+	3	1	1	3	6	1	2	3	30—	1	1		1	
Wisconsin	5	15	20	2	11	13	24+	3		3	3		3	4	7	35+	4			2	1
Wyoming		1	1		1	1	43				1										
Total	451	835	1,286	202	625	887	28—	222	141	57	325	142	189	210	399	32+	145	63	26	100	66

* No candidates appeared for examination.

TABLE 5.—*Showing the number examined for clerk and for copyist, departmental service, the number that passed and that failed, the legal residence, average age, and education, during the year ended June* 30, 1889—Continued.

Legal residence.	Clerk.																		Summary of copyist and clerk examinations.								
	Examined.			Passed.								Failed.									Examined.			Passed.			Failed.		
								Education.								Education.												
	Male.	Female.	Total.	Male.	Female.	Total.	Average age.	Common school.	Academic.	Business college.	High school.	Collegiate.	Male.	Female.	Total.	Average age.	Common school.	Academic.	Business college.	High school.	Collegiate.	Male.	Female.	Total.	Male.	Female.	Total.	Male.	Female.	Total.
Alabama	7	....	7	6	....	6	27+	1	....	1	1	3	1	....	1	26	....	....	1	....	....	14	7	21	11	5	16	3	2	5
Alaska	....	....	....	....	....	....	....	....	....	....	....	....	....	....	....	....	....	....	....	....	....	....	1	1	....	1	1	....	....	....
Arizona	2	....	2	1	....	1	34	....	....	1	....	....	1	....	1	34	....	....	1	....	....	3	....	3	2	....	2	1	....	1
Arkansas	9	....	9	7	....	7	27—	....	1	....	1	5	2	....	2	41+	1	1	....	....	....	10	1	11	8	1	9	2	....	2
California	8	....	8	7	....	7	29+	....	2	....	2	3	1	....	1	21	....	1	....	....	....	10	4	14	9	4	13	1	....	1
Colorado	4	1	5	3	1	4	34	1	....	....	2	1	1	....	1	37	....	....	1	....	....	5	2	7	4	2	6	1	....	1
Connecticut	12	....	12	6	....	6	28+	1	....	2	1	2	6	....	6	35	3	2	....	1	....	16	12	28	10	10	20	6	2	8
Dakota	....	....	....	....	....	....	....	....	....	....	....	....	....	....	....	....	....	....	....	....	....	....	4	4	....	4	4	....	....	....
Delaware	7	1	8	3	1	4	31	....	1	....	2	1	4	....	4	34	1	2	....	1	....	9	4	13	5	4	9	4	....	4
District of Columbia	....	....	....	....	....	....	....	....	....	....	....	....	....	....	....	....	....	....	....	....	....	1	....	1	1	....	1	....	....	....
Florida	3	....	3	3	....	3	34—	2	....	....	....	1	....	....	....	....	....	....	....	....	....	5	3	8	5	3	8	....	....	....
Georgia	10	....	10	7	....	7	33—	1	1	....	3	2	3	....	3	28—	1	....	....	1	1	18	13	31	11	7	18	7	6	13
Idaho	....	....	....	....	....	....	....	....	....	....	....	....	....	....	....	....	....	....	....	....	....	....	1	1	....	1	1	....	....	....
Illinois	76	4	80	45	3	48	30—	7	2	4	14	21	31	1	32	32+	13	1	3	5	10	102	37	139	61	24	85	41	13	54
Indiana	125	8	133	73	5	78	30+	13	5	6	24	30	52	3	55	32—	10	5	6	15	19	161	58	219	97	38	135	64	20	84
Iowa	30	3	33	20	2	22	32—	6	....	1	10	5	10	1	11	35+	1	2	3	4	1	40	18	58	23	12	35	17	6	23
Indian Territory	....	....	....	....	....	....	....	....	....	....	....	....	....	....	....	....	....	....	....	....	....	....	1	1	....	1	1	....	....	....
Kansas	26	2	28	20	2	22	30—	2	3	1	6	10	6	....	6	23+	....	1	....	4	1	39	14	53	28	13	41	11	1	12
Kentucky	20	4	24	10	1	11	30+	....	3	1	3	4	10	3	13	28	4	5	....	3	1	33	24	57	14	15	29	19	9	28
Louisiana	2	....	2	1	....	1	41	1	....	....	....	....	1	....	1	46	1	....	....	....	....	2	3	5	1	3	4	1	....	1
Maine	18	....	18	13	....	13	31—	1	1	2	1	8	5	....	5	42	2	....	....	3	....	21	10	31	15	8	23	6	2	8
Maryland	41	5	46	24	2	26	32+	8	5	2	6	5	17	3	20	33	7	4	1	3	5	75	91	166	38	57	95	37	34	71
Massachusetts	25	5	30	19	4	23	25—	4	....	2	7	10	6	1	7	37	....	3	....	2	1	38	30	68	29	28	57	9	2	11
Michigan	39	2	41	28	2	30	29+	4	6	1	10	9	11	....	11	38+	1	2	2	4	2	51	26	77	36	19	55	15	7	22
Minnesota	13	....	13	11	....	11	31	3	2	2	1	3	2	....	2	22	....	....	1	....	1	21	8	29	17	6	23	4	2	6
Mississippi	10	2	12	6	1	7	29	....	....	....	2	5	4	1	5	37—	1	....	....	1	3	20	7	27	11	4	15	9	3	12
Missouri	33	2	35	23	2	25	29+	3	2	....	8	12	10	....	10	31+	4	2	....	1	3	43	15	58	29	11	40	14	4	18
Montana	1	....	1	1	....	1	27	....	....	....	1	....	....	....	....	....	....	....	....	....	....	3	1	4	3	1	4	....	....	....

Nebraska	12	1	13	8	1	9	34—	1	1	....	6	1	4	....	4	44+	2	....	....	1	1	13	10	23	9	9	18	4	1	5
Nevada	....	....	....	....	....	....	....	....	....	....	....	....	....	....	....	....	....	....	....	....	....	....	1	1	....	....	....	....	1	1
New Hampshire	8	1	9	6	1	7	28	....	3	2	1	1	2	....	2	23	....	1	....	1	....	8	6	14	6	4	10	2	2	4
New Jersey	30	1	31	24	1	25	33+	7	3	1	9	5	6	....	6	32	1	1	....	3	1	40	25	65	30	24	54	10	1	11
New Mexico*	....	....	....	....	....	....	....	....	....	....	....	....	....	....	....	....	....	....	....	....	....	....	....	....	....	....	....	....	....	....
New York	73	11	84	49	8	57	30—	9	5	6	29	17	24	3	27	37—	12	5	2	4	4	107	113	220	70	90	160	37	23	60
North Carolina	15	....	15	7	....	7	32	....	....	....	1	6	8	....	8	32+	2	2	....	....	4	27	14	41	11	13	24	16	1	17
Ohio	118	10	128	95	6	101	31+	15	13	9	31	33	23	4	27	33+	....	3	7	7	10	158	71	229	123	53	175	36	18	54
Oregon	2	....	2	2	....	2	37	....	....	....	1	1	....	....	....	....	....	....	....	....	....	3	....	3	2	....	2	1	....	1
Pennsylvania	95	5	100	75	4	79	31—	15	19	5	26	14	20	1	21	31—	5	4	4	5	3	141	102	243	94	82	176	47	20	67
Rhode Island	1	....	1	1	....	1	23	....	1	....	....	....	....	....	....	....	....	....	....	....	....	3	3	6	3	3	6	....	....	....
South Carolina	10	....	10	6	....	6	27—	....	....	....	....	6	4	....	4	33	....	1	....	....	3	20	13	33	14	8	22	6	5	11
Tennessee	25	1	26	19	....	19	28+	4	3	1	7	4	6	1	7	37—	2	....	1	1	3	37	17	54	24	10	34	13	7	20
Texas	14	....	14	8	....	8	26—	....	1	1	1	5	6	....	6	25+	1	....	1	....	4	16	9	25	10	6	16	6	3	9
Utah*	....	....	....	....	....	....	....	....	....	....	....	....	....	....	....	....	....	....	....	....	....	....	....	....	....	....	....	....	....	....
Vermont	9	3	12	6	2	8	28+	..	1	....	4	3	3	1	4	32+	1	1	2	....	....	10	9	19	7	7	14	3	2	5
Virginia	30	3	33	19	3	22	33—	5	3	1	5	8	11	....	11	28	3	1	1	2	4	79	68	167	46	58	104	33	30	63
Washington	....	....	....	....	....	....	....	....	....	....	....	....	....	....	....	....	....	....	....	....	....	2	1	3	2	1	3	....	....	....
West Virginia	10	2	12	10	2	12	29+	3	5	....	1	3	....	....	....	....	....	....	....	....	....	15	19	34	14	17	31	1	2	3
Wisconsin	17	....	17	16	....	16	30+	2	1	....	5	8	1	....	1	28	....	....	....	1	....	22	15	37	18	11	29	4	4	8
Wyoming	1	....	1	1	....	1	25	1	....	....	....	....	....	....	....	....	....	....	....	....	....	1	1	2	1	1	2	....	....	....
Total	991	77	1063	689	54	743	30+	120	93	52	223	255	302	23	325	33—	79	50	37	74	85	1,442	912	2,354	951	679	1,630	491	233	724

*No candidates appeared for examination.

TABLE 6.—*Showing the number who took special examinations for the Bureau of Pensions, Interior Department, the number that passed and that failed, legal residence, average age, and education, during the year ended June 30, 1889.*

SPECIAL PENSION EXAMINER.

Legal residence.	Examined.	Passed.							Failed.						
		Number.	Average age.	Education.					Number.	Average age.	Education.				
				Common school.	Academic.	Business college.	High school.	Collegiate.			Common school.	Academic.	Business college.	High school.	Collegiate.
Alabama	2	...	.....	.....	....	.....	...	....	2	28+	1	....	.....	....	1
Colorado	1	...	.....	.....	....	.....	...	....	1	34	1	....	.....	....	...
Connecticut	3	1	43	.....	....	.....	1	....	2	46	.....	...	.....	1	1
Dakota	4	1	45	1	...	.....	...	....	3	42	2	...	.....	1	...
Delaware	1	...	.....	.....	...	.....	...	...	1	49	.....	1	.....	...	...
Florida	1	...	.....	.....	...	.....	...	...	1	44	.....	...	.....	1	...
Georgia	1	1	26	.....	...	.....	...	1	...	.....	.....	...	.....	..	...
Idaho	1	1	50	1	...	.....	...	...	...	.....	.....	...	.....	...	...
Illinois	50	6	34−	1	...	.....	...	5	44	42+	17	4	1	9	13
Indiana	72	8	36−	2	1	.....	2	3	64	44+	31	6	2	14	11
Iowa	36	3	34−	.....	1	.....	1	1	33	44+	16	2	2	5	8
Kansas	20	2	34	1	...	.....	...	1	18	42+	5	1	2	3	7
Kentucky	13	1	55	.....	...	.....	...	1	12	34−	3	2	.....	6	1
Louisiana	2	...	.....	.....	...	.....	...	...	2	43	2	...	.....	...	...
Maine	10	3	34+	1	...	.....	2	...	7	48	.....	2	.....	4	1
Maryland	3	...	.....	.....	...	.....	...	...	3	47	1	1	.....	...	1
Massachusetts	6	1	25	.....	...	.....	...	1	5	53	3	...	.....	1	1
Michigan	15	1	30	.....	...	.....	...	1	14	48+	6	1	1	1	5
Minnesota	2	1	33	.....	...	.....	...	1	1	47	.....	...	.....	...	1
Mississippi	3	..	.....	.....	...	.....	...	..	3	47+	.....	1	1	1	...
Missouri	28	6	46+	1	...	1	...	4	22	43−	8	3	1	1	9
Nebraska	8	3	41+	1	...	.....	...	2	5	39+	1	2	.....	...	2
New Hampshire	3	1	29	.....	...	.....	...	1	2	25	.....	...	1	1	...
New Jersey	4	2	26	.....	...	.....	...	2	2	40	.....	...	.....	...	2
New Mexico	1	...	.....	.....	...	.....	...	...	1	32	.....	...	.....	...	1
New York	22	2	27	.....	1	.....	...	1	20	43−	7	5	3	1	4
North Carolina	3	1	47	.....	..	.....	...	1	2	27+	1	...	.....	...	1
Ohio	69	6	32+	2	..	.....	2	2	63	43+	31	5	5	8	14
Oregon	6	1	41	.....	...	.....	...	1	5	48−	3	...	.....	1	1
Pennsylvania	21	5	42+	.....	2	.....	1	2	16	44−	8	3	2	1	2
South Carolina	1	1	25	.....	...	.....	...	1	...	.....	.....	...	.....	...	...
Tennessee	2	...	.....	.....	...	.....	...	...	2	33	.....	...	.....	1	1
Texas	2	1	27	.....	...	.....	...	1	1	38	.....	...	.....	...	1
Vermont	5	2	38+	.....	1	.....	...	1	3	48+	2	...	.....	1	...
Virginia	5	2	21+	.....	1	.....	1	...	3	46−	1	1	.....	...	1
West Virginia	5	1	26	.....	...	.....	...	1	4	40−	2	1	.....	..	1
Wisconsin	3	1	25	.....	...	.....	1	...	2	49+	1	1	.....	...	...
Total	434	65	36−	11	7	1	11	35	369	45+	153	42	21	62	91

Papers of 55 persons examined for special pension examiner at Indianapolis, June 6, 1889, included in the above table, were canceled by the commission on account of charges of irregularity on the part of some of the competitors. As these charges appeared to be well founded, and as the commission found it impossible to identify the particular individuals implicated and, therefore, to punish the guilty and to clear the innocent, the only course left was to treat the whole examination as discredited, cancel all the papers, and allow the competitors to be re-examined on other papers. This was accordingly done. Those whose papers were canceled were distributed by legal residence as follows: Indiana, eligible 3, ineligible 42; Illinois, ineligible 4; Missouri, eligible 1; Ohio, ineligible 1; Kentucky, ineligible 1; Michigan, ineligible 2; Kansas, ineligible 1.

TABLE 6.—*Showing the number who took special examinations for the Bureau of Pensions, Interior Department, etc.*—Continued.

MEDICAL PENSION EXAMINER.

Legal residence.	Examined.	Passed.							Failed.						
		Number.	Average age.	Education.					Number.	Average age.	Education.				
				Common school.	Academic.	Business college.	High school.	Collegiate.			Common school.	Academic.	Business college.	High school.	Collegiate.
Arizona	1	1	31	1											
Colorado	2								2	37					2
Illinois	2								2	48					2
Indiana	4	1	23					1	3	52	1				2
Iowa	1								1	61					1
Kansas	1								1	45					1
Maryland	6	3	24–		1		1	1	3	40+					3
Michigan	1								1	51					1
Minnesota	1	1	35					1							
Missouri	1								1	36					1
New York	2								2	21+					2
Ohio	2								2	43					2
Pennsylvania	3	1	29		1				2	42					2
Rhode Island	1								1	53					1
South Carolina	1								1	57					1
Tennessee	1								1	28					1
Virginia	6	2	28–					2	4	42–					4
West Virginia	2	1	30					1	1	38					1
Total	38	10	27+	1	2		1	6	28	43–	1				27

PRINCIPAL PENSION EXAMINER.

Iowa	1								1	44	1				
Kentucky	1	1	35					1							
Massachusetts	1	1	34					1							
Missouri	1	1	60					1							
Virginia	1	1	40	1											
Total	5	4	42+	1				3	1	44	1				

SUMMARY OF SPECIAL EXAMINATIONS FOR THE BUREAU OF PENSIONS.

Legal residence.	Examined.	Legal residence.	Examined.	Legal residence.	Examined.
Alabama	2	Louisiana	2	Ohio	71
Arizona	1	Maine	10	Oregon	6
Colorado	3	Maryland	9	Pennsylvania	24
Connecticut	3	Massachusetts	7	Rhode Island	1
Dakota	4	Michigan	16	South Carolina	2
Delaware	1	Minnesota	3	Tennessee	3
Florida	1	Mississippi	3	Texas	2
Georgia	1	Missouri	30	Vermont	5
Idaho	1	Nebraska	8	Virginia	12
Illinois	52	New Hampshire	3	West Virginia	7
Indiana	76	New Jersey	4	Wisconsin	3
Iowa	38	New Mexico	1		
Kansas	21	New York	24	Total	477
Kentucky	14	North Carolina	3		

All of the competitors in special examinations for the Pension Office were males except one, who was an ineligible from Pennsylvania.

TABLE 7.—*Showing the number who took the special examination for the position of post-office inspector, Post-Office Department, the number that passed and that failed, the legal residence, average age, and education, during the year ended June 30, 1899.*

Legal residence.	Examined.	Passed.							Failed.						
		Number.	Average age.	Education.					Number.	Average age.	Education.				
				Common school.	Academic.	Business college.	High school.	Collegiate.			Common school.	Academic.	Business college.	High school.	Collegiate.
California	8	4	37	....	1	....	3	....	4	39	1	1	....	1	1
Connecticut	4	2	41+	1	1	....	....	....	2	42+	....	1	1	....	....
Dakota	1	1	35	....	....	1	....	....	....	....	....	....	....	....	....
Georgia	1	....	....	....	....	....	....	....	1	40	....	....	....	....	1
Illinois	23	11	35—	1	3	2	3	2	12	48—	7	1	....	2	2
Indiana	27	16	38—	3	5	....	3	5	11	46+	6	1	....	1	3
Iowa	12	10	41—	3	....	3	1	3	2	44+	....	....	....	1	1
Kansas	7	6	39+	3	1	....	....	2	1	46	....	1	..	....	....
Kentucky	1	1	27	....	....	....	....	1	....	....	....	....	....	....	....
Maine	3	2	40	....	1	....	....	1	1	36	....	....	....	1	....
Maryland	1	1	50	1	....	....	....	....	....	....	....	....	....	....	....
Massachusetts	3	1	43	1	....	....	....	....	2	46+	1	1	....	....	....
Michigan	4	4	33—	....	....	....	2	2	....	....	....	....	....	....	....
Minnesota	2	2	35+	....	....	1	....	1	....	....	....	....	....	....	....
Mississippi	1	1	22	....	....	....	....	1	....	....	....	....	....	....	....
Missouri	7	4	36—	....	1	1	1	1	3	41—	1	....	..	1	1
Nebraska	3	2	40	1	1	....	....	....	1	64	1	....	....	....	....
New Hampshire	3	1	45	....	....	....	1	....	2	42+	1	....	....	....	1
New Jersey	4	3	33+	1	....	1	1	....	1	29	....	....	..	1	....
New York	9	5	27	....	2	1	1	1	4	42+	1	1	1	....	1
North Carolina	1	....	....	....	....	....	....	....	1	39	....	....	....	....	1
Ohio	23	10	34—	....	....	....	6	4	13	47—	7	1	2	1	2
Oregon	1	1	34	1	....	....	....	....	....	....	....	....	....	....	....
Pennsylvania	9	5	41	....	4	....	1	....	4	44+	3	1	....	....	....
Tennessee	2	1	31	....	....	....	1	....	1	42	....	1	....	....	....
Texas	1	....	....	....	....	....	....	....	1	24	....	....	....	....	1
Vermont	1	....	....	....	....	....	....	....	1	44	....	....	....	1	....
Virginia	6	4	27+	....	1	....	2	1	2	39	....	2	....	....	....
West Virginia	6	3	31	1	....	....	....	2	3	35	2	....	....	1	....
Wisconsin	3	1	25	....	1	....	....	....	2	49	....	....	1	1	....
Wyoming	1	....	....	....	....	....	....	....	1	27	....	....	1	....	....
Total	178	102	36—	17	22	10	26	27	76	44—	31	12	6	12	15

TABLE 8.—*Showing number who took the special examination for the position of assistant examiner in the Patent Office, Interior Department, the number that passed and that failed, the legal residence, average age, and education, during the year ended June* 30, 1889.

Legal residence.	Examined.	Passed.							Failed.						
		Number.	Average age.	Education.					Number.	Average age.	Education.				
				Common school.	Academic.	Business college.	High school.	Collegiate.			Common school.	Academic.	Business college.	High school.	Collegiate.
Alabama	1	.....	.....	....	...	....	....	....	1	20	....	....	....	....	1
California	1	.....	.....	....	....	....	....	....	1	27	....	....	....	....	1
Connecticut	6	1	23	....	....	....	....	1	5	23+	....	....	....	3	2
Illinois	1	.....	.....	....	....	....	....	....	1	24	....	....	....	....	1
Kansas	1	1	26	....	....	....	....	1	.....	.....	....	....	....	....	....
Louisiana	1	1	28	....	....	....	....	1	.....	.....	....	....	....	....	....
Maryland	4	1	22	....	....	....	....	1	3	38	3	....	....	....	....
Massachusetts	4	2	25	....	....	....	....	2	2	22	....	....	....	....	2
Michigan	1	.....	.....	....	....	....	....	....	1	21	....	....	....	....	1
Minnesota	1	.....	.....	....	....	....	....	....	1	29	....	....	....	....	1
Missouri	5	2	24	....	....	....	....	2	3	33—	....	....	....	2	1
New Hampshire	1	1	27	....	....	....	....	1	.....	.....	....	....	....	....	....
New Jersey	1	1	29	....	....	....	....	1	.....	.....	....	....	....	....	....
New York	11	6	26—	....	....	....	1	5	5	24	....	1	....	1	3
Ohio	2	.....	.....	....	....	....	....	....	2	32	1	....	....	....	1
Pennsylvania	1	1	27	....	1	....	....	....	.....	.....	....	....	....	....	....
Texas	2	1	29	....	....	....	....	1	1	25	....	....	....	....	1
Vermont	2	2	22+	....	1	....	....	1	.....	.....	....	....	....	....	....
Virginia	2	1	23	....	....	....	....	1	1	24	....	....	....	....	1
West Virginia	2	1	21	....	....	....	....	1	1	20	....	....	....	....	1
Total	50	22	25+	....	2	....	1	19	28	27—	4	1	....	6	17

TABLE 9.—*Showing number who took the book-keeper examination, departmental service, the number that passed and that failed, the legal residence, average age, and education, during the year ended June* 30, 1889.

Legal residence.	Examined.	Passed.								Failed.							
		Number.			Education.					Number.			Education.				
		Male.	Female.	Average age.	Common school.	Academic.	Business college.	High school.	Collegiate.	Male.	Female.	Average age.	Common school.	Academic.	Business college.	High school.	Collegiate.
Alabama	1	....	....	.....	....	....	....	....	....	....	1	42	....	....	....	1	....
Arizona	1	....	....	.....	....	....	....	....	....	1	....	34	....	....	1	....	....
California	1	....	1	29	....	....	....	1	....	....	....	.....	....	....	....	....	....
Colorado	1	....	....	.....	....	....	....	....	....	....	1	30	1	....	....	....	....
Connecticut	1	....	....	.....	....	....	....	....	....	....	1	20	....	....	....	1	....
Dakota	2	....	....	.....	....	....	....	....	....	....	2	37	....	2	....	....	....
Delaware	1	....	1	35	1	....	....	....	....	....	....	.....	....	....	....	....	....
Florida	3	1	....	20	....	....	....	1	....	2	....	22+	....	....	1	....	1
Georgia	1	....	....	.....	....	....	....	....	....	1	....	40	....	....	....	....	1
Illinois	10	2	1	32	....	....	2	....	1	4	3	35—	4	....	....	2	1
Indiana	5	2	....	28+	....	....	....	1	1	3	....	24+	....	....	1	2	....
Iowa	1	....	....	.....	....	....	....	....	....	1	....	27	....	....	1	....	....
Kentucky	4	....	....	.....	....	....	....	....	....	4	....	33+	1	....	1	1	1
Maryland	8	2	....	30—	....	....	1	1	....	3	3	33—	2	....	4	....	....
Massachusetts	3	....	....	.....	....	....	....	....	....	2	1	35—	1	....	....	2	....
Michigan	4	1	....	26	....	....	....	1	....	1	2	27	....	....	....	3	....
Minnesota	1	....	....	.....	....	....	....	....	....	1	....	28	....	....	1	....	....
New Jersey	2	1	....	59	....	....	....	....	1	1	....	59	....	....	....	....	1
New York	13	1	1	33	1	1	....	....	....	8	3	33—	1	1	3	5	1
North Carolina	2	1	....	28	....	....	....	....	1	1	....	20	....	1	....	....	....
Ohio	10	3	....	32+	1	....	1	....	1	6	1	32+	1	1	1	3	1
Pennsylvania	8	1	....	25	....	....	....	....	1	5	2	28—	....	1	3	2	1
Rhode Island	1	....	....	.....	....	....	....	....	....	1	....	32	....	....	1	....	....
South Carolina	1	1	....	26	....	....	....	1	....	....	....	.....	....	....	....	....	....
Tennessee	4	1	....	25	....	....	1	....	....	3	....	43+	3	....	....	....	....
Texas	2	1	....	36	....	....	1	....	....	1	....	26	....	....	....	....	1
Vermont	1	....	....	.....	....	....	....	....	....	1	....	26	....	1	....	....	....
Virginia	8	2	....	33	....	....	1	....	1	2	4	44—	1	1	....	2	2
West Virginia	2	....	....	.....	....	....	....	....	....	2	....	34+	1	....	....	....	1
Total	102	20	4	31+	3	1	7	6	7	54	24	33	16	8	18	24	12

TABLE 10.—*Showing number who took the special examination for the position of clerk, State Department, the number that passed and that failed, the legal residence, average age, and education, during the year ended June* 30, 1889.

Legal residence.	Examined.	Passed.							Failed.							
		Number.	Average age.	Education.					Number.	Average age.	Education.					
				Common school.	Academic.	Business college.	High school.	Collegiate.			Common school.	Academic.	Business college.	High school.	Collegiate.
Arizona	1	....	.....	....	....	....	....	....	1	68	....	1	....	....	....
Dakota	1	1	46	....	....	....	1	....	.....	.....	....	....	....	....	....
Maryland	1	1	38	....	....	....	....	1	.....	.....	....	....	....	....	....
New York	1	.....	.....	....	....	....	....	....	1	58	....	....	....	....	1
Pennsylvania	1	1	21	....	....	....	1	....	.....	.....	....	....	....	....	....
Wisconsin	1	1	25	....	....	....	....	1	.....	.....	....	....	....	....	....
Total	6	4	32+	....	....	....	2	2	2	63	....	1	....	....	1

TABLE 11.—*Showing the number who took special examinations for the position of computers, departmental service, the number that passed and that failed, the legal residence, average age, and education, during the year ended June 30, 1889.*

a NAUTICAL ALMANAC.

Legal residence.	Examined.	Passed.							Failed.						
		Number.	Average age.	Education.					Number.	Average age.	Education.				
				Common school.	Academic.	Business college.	High school.	Collegiate.			Common school.	Academic.	Business college.	High school.	Collegiate.
New Hampshire	1								1	26					1
New York	2	1	26					1	1	20					1
Missouri	1	1	32					1							
West Virginia	1								1	21					1
Minnesota	1								1	25					1
Illinois	1								1	26					1
New Jersey	1								1	20					1
Michigan	1	1	26					1							
Wisconsin	1	1	37					1							
Massachusetts	1								1	25					1
Total	11	4	30+					4	7	23+					7

b NAVAL OBSERVATORY.

Pennsylvania	1	1	27					1							
Arkansas	1								1	20		1			
Massachusetts	1	1	34					1							
Tennessee	1								1	63		1			
Texas	1								1	25					1
Maryland	1								1	22					1
Mississippi	1	1	21		1										
Virginia	1								1	20		1			
New York	1	1	31					1							
Illinois	1	1	24					1							
Total	10	5	27+		1			4	5	30		3			2

c COAST AND GEODETIC SURVEY.

Maryland	1	1	25					1							
Virginia	2	1	21					1	1	20					1
Massachusetts	1								1	20				1	
Illinois	1								1	25					1
New York	1	1	20					1							
Total	6	3	22					3	3	22—				1	2

d ORDNANCE OFFICE (WAR DEPARTMENT).

Massachusetts	3								3	21+					3
Illinois	2								2	24					2
Colorado	1	1	25					1							
New York	1	1	22					1							
Total	7	2	23+					2	5	23—					5
Grand total	34	14	26+		1			13	20	25—		3		1	16

TABLE 12.—*Showing number who took special examinations for the positions of expert in nautical science, expert in naval science and affairs, book-keeper and expert, or assistant astronomer, Navy Department, the number that passed and that failed, the legal residence, average age, and education, during the year ended June 30, 1889.*

a EXPERTS NAUTICAL SCIENCE (HYDROGRAPHIC OFFICE).

Legal residence.	Examined.	Passed.							Failed.						
		Number.	Average age.	Education.					Number.	Average age.	Education.				
				Common school.	Academic.	Business college.	High school.	Collegiate.			Common school.	Academic.	Business college.	High school.	Collegiate.
District of Columbia	1	1	23	....	....	....	....	1	.....	.....	....	....	....	....	....
Maryland	1	1	27	....	....	....	....	1	.....	.....	....	....	....	..	....
Missouri	1	1	21	....	....	....	....	1	.....	.....	....	..	....	....	....
North Carolina	1	1	22	....	....	....	....	1	.....	.....	....	....	....	..	....
Ohio	1	1	23	....	....	....	....	1	.....	.....	....	....	....	..	....
Pennsylvania	1	1	22	....	....	....	....	1	.....	.....	....	..	....	....	....
Tennessee	1	1	23	....	....	....	....	1	.....	.....	....	....	....	....	....
Vermont	1	1	23	....	....	....	....	1	.....	.....	....	....	....	..	....
Total	8	8	24	....	....	....	..	8	.....	.....	....	..	..	..	....

b EXPERT NAVAL SCIENCE AND AFFAIRS (WAR RECORDS OFFICE, NAVY DEPARTMENT).

Tennessee	1	1	23	...	....	....	....	1	.....	.....	....	....	....	....	....

c ASSISTANT ASTRONOMER (NAVAL OBSERVATORY).

Connecticut	1	1	29	....	....	....	....	1	.....	.....	....	....	....	....	....
Louisiana	1	.....	.....	...	....	....	....	....	1	.....	....	....	....	....	1
Maryland	1	1	23	....	....	....	....	1	.....	28	....	....	....	....	....
Massachusetts	1	1	35	....	....	....	....	1	.....	.....	....	....	....	....	....
Missouri	1	.....	.....	....	....	....	....	....	1	.....	....	..	....	....	1
Wisconsin	1	1	37	....	....	....	....	1	.....	27	....	....	..	....	....
Total	6	4	31	....	....	....	....	4	2	27+	....	...	..	....	2

d BOOK-KEEPER AND EXPERT (NAVY DEPARTMENT).

Virginia	1	1	49	....	....	....	....	1	.....	.....	....	....	....	....	....

TABLE 13.—*Showing number who took special examinations for the positions of civil engineer and assistant civil engineer in the office of the Quartermaster-General, War Department, the number that passed and that failed, the legal residence, average age, and education, during the year ended June* 30, 1889.

a CIVIL ENGINEER (QUARTERMASTER-GENERAL'S OFFICE).

Legal residence.	Examined.	Passed.							Failed.						
		Number.	Average age.	Education.					Number.	Average age.	Education.				
				Common school.	Academic.	Business college.	High school.	Collegiate.			Common school.	Academic.	Business college.	High school.	Collegiate.
Connecticut	1	.....	.....	....	....	....	....	....	1	34	....	....	....	....	1
Kansas	1	.....	.....	....	....	....	....	....	1	29	....	1	....	....	....
Maryland	1	.....	.....	....	....	....	....	....	1	33	....	....	....	....	1
Massachusetts	4	.....	.....	....	....	....	....	....	4	30	....	1	....	1	2
Michigan	1	1	40	....	....	....	....	1	.....	.....	....	....	....	....	....
New Jersey	1	.....	.....	....	....	....	....	....	1	22	....	....	....	....	1
New York	4	1	31	....	....	....	....	1	3	35+	....	....	....	1	2
Pennsylvania	3	1	27	....	....	....	....	1	2	36+	....	1	....	1	....
Tennessee	1	.....	.....	....	....	....	....	....	1	61	....	....	....	....	1
Total	17	3	33—	....	....	....	....	3	14	34+	....	3	....	3	8

b ASSISTANT CIVIL ENGINEER (QUARTERMASTER-GENERAL'S OFFICE).

Ohio	1	.....	.....	....	....	....	....	....	1	23	....	..	....	1	....
New York	1	.....	.....	....	....	....	....	....	1	40	....	1	....	....	....
Total	2	.....	.....	....	....	....	....	....	2	31+	....	1	....	1	..

TABLE 14.—*Showing number who took special examinations for the positions of Draftsman and of copyist of drawings, the number that passed and that failed, the legal residence, average age, and education, during the year ended June* 30, 1889.

a TOPOGRAPHIC (DEPARTMENTAL).

Legal residence.	Examined.	Passed.								Failed.							
		Number.		Average age.	Education.					Number.		Average age.	Education.				
		Male.	Female.		Common school.	Academic.	Business college.	High school.	Collegiate.	Male.	Female.		Common school.	Academic.	Business college.	High school.	Collegiate.
New Hampshire	1	1	....	26	....	....	....	....	1	....	....	.....	....	....	....	....	....
New York	3	3	....	27+	....	....	....	1	2	....	....	.....	....	....	....	....	....
North Carolina	1	1	....	28	....	....	....	....	1	....	....	.....	....	....	....	....	....
Maryland	2	1	....	22	1	....	....	....	....	1	....	48	....	1	....	....	....
Massachusetts	5	2	....	31+	....	....	....	2	....	3	....	23	....	1	....	1	1
Pennsylvania	4	1	....	24	....	....	....	....	1	3	....	41+	....	2	....	1	..
Total	16	9	....	27+	1	....	....	3	5	7	....	34+	....	4	....	2	1

TABLE 14.—*Showing number who took special examinations for the positions of draftsman and copyist of drawings, etc.*—Continued.

b COPYIST OF MECHANICAL DRAWINGS (PATENT OFFICE).

Legal residence.	Examined.	Passed.								Failed.							
		Number.			Education.					Number.			Education.				
		Male.	Female.	Average age.	Common school.	Academic.	Business college.	High school.	Collegiate.	Male.	Female.	Average age.	Common school.	Academic.	Business college.	High school.	Collegiate.
Kansas	1	....	1	35	....	....	....	....	1	..	....	.....	....	....	....	....	....
New York	1	....	....	.....	....	....	....	....	....	..	1	35	1	....	....	....	..
North Carolina	2	....	....	.....	....	....	....	....	....	1	1	28+	1	1	....	....	....
Massachusetts	1	....	1	22	....	....	....	1	....	....	....	.....	....	....	....	....	....
Tennessee	1	....	....	.....	....	....	....	....	....	....	1	36	..	1	..	....	..
Total	6	....	2	28+	....	....	..	1	1	1	3	32	2	2	....	....	..

c MECHANICAL (PATENT OFFICE).

Indiana	1	1	....	30	....	....	....	....	1	....	....	.....	....	....	....	....	....
Michigan	1	....	....	.....	....	....	....	....	....	1	....	28	....	..	....	1	....
Nebraska	1	....	....	.....	....	....	....	....	....	1	....	20	....	1	....	....	....
New Jersey	1	....	....	.....	....	....	....	....	....	1	....	24	....	....	1	....	....
New York	1	..	....	.....	....	....	....	....	....	1	....	21	....	....	....	1	....
Total	5	1	....	30	....	....	....	..	1	4	....	23+	....	1	1	2	..

d ARCHITECTURAL (DEPARTMENTAL).

Maryland	2	....	....	.....	....	....	....	....	....	2	....	21	..	....	..	....	2

e ARCHITECTURAL (SUPERVISING ARCHITECT'S OFFICE).

Illinois	1	1	....	22	1	....	....	..	....	....	....	.....	..	....	..	....	....
Kansas	1	....	....	.....	....	....	....	....	....	1	....	24	....	....	....	..	1
Massachusetts	3	....	....	.....	....	....	....	....	....	3	....	21—	2	....	..	1	....
New Jersey	2	2	....	24	....	1	....	1	..	....	....	.....	..	..	....	....	....
New York	5	2	....	23+	....	....	....	2	....	3	....	25	2	....	....	..	1
Ohio	1	1	....	22	....	....	..	1	....	....	....	.....	....	....	....	..	....
Pennsylvania	3	2	....	28+	....	....	....	1	1	1	..	25	....	....	....	..	1
West Virginia	1	....	..	.....	....	....	....	....	....	1	....	40	..	....	1	..	....
Total	17	8	....	24+	1	1	....	5	1	9	....	25	4	....	1	1	3

f ARCHITECTURAL (QUARTERMASTER-GENERAL'S OFFICE).

Kansas	1	1	....	29	....	1	....	....	....	....	....	.....	....	....	....	....	....
Maryland	2	1	....	20	1	....	....	..	....	1	....	25	1	....	....	....	....
New York	2	1	....	26	1	....	....	....	....	1	....	21	1	....	....	....	....
Virginia	1	1	....	32	....	....	....	....	1	....	....	.....	....	....	....	....	....
West Virginia	1	....	....	.....	....	....	....	....	....	1	....	42	....	....	....	....	1
Wisconsin	1	1	....	21	....	....	....	1	....	....	....	.....	....	....	....	....	....
Total	8	5	....	26—	2	1	....	1	1	3	....	29+	2	....	..	....	1

TABLE 14.—*Showing number who took special examinations for the positions of draftsman and copyist of drawings, etc.*—Continued.

g TRACER (SUPERVISING ARCHITECT'S OFFICE).

Legal residence.	Examined.	Passed.								Failed.							
		Number.		Average age.	Education.					Number.		Average age.	Education.				
		Male.	Female.		Common school.	Academic.	Business college.	High school.	Collegiate.	Male.	Female.		Common school.	Academic.	Business college.	High school.	Collegiate.
Alabama	1	....	..	.....	..	....	....	....	....	..	1	43	....	1	....	..	..
Kansas	1	....	1	36	1	....	....	....	....	....	....	.....	....	....	....	....	..
Kentucky	1	....	1	21	1	....	....	....	..	....	....	.....	....	....	....	....	..
Massachusetts	1	....	..	.....	....	....	....	....	....	.	1	47	....	....	.	..	1
Maryland	2	....	....	.....	..	....	....	....	....	2	....	21	....	....	2	....	....
Missouri	1	....	1	21	..	....	....	1	....	....	....	.....	....	....	....	....	..
New York	2	...	1	23	....	....	....	....	1	1	....	45	1	..	....	..	....
Tennessee	1	....	1	22	..	....	....	1	....	....	....	....	....	....	....	....	..
Total	10	....	5	25—	2	....	....	2	1	3	2	35+	1	1	2	....	1

A PALEONTOLOGICAL DELINEATOR (GEOLOGICAL SURVEY).

District of Columbia	3	....	....	.....	....	....	....	..	....	3	....	47+	1	1	....	....	1
Kansas	1	....	....	.....	....	..	....	....	....	..	1	22	....	....	....	....	1
Ohio	1	....	....	.....	....	....	....	....	....	1	....	20	....	....	....	....	1
Virginia	1	....	....	.....	....	..	....	....	..	....	1	26	....	1	....	....	....
Total	6	....	....	.....	....		....	....	....	4	2	35	1	2	....	....	3
Grand total of draftsmen	70	23	7	26—	6	2	...	12	10	33	7	30+	10	10	4	5	11

TABLE 15.—*Showing the number who took special examinations for the positions of sanitary expert, heating and ventilating expert, and for constructor in metal, in the office of the Supervising Architect, Treasury Department, the number that passed and that failed, the legal residence, average age, and education, during the year ended June 30, 1889.*

a SANITARY EXPERT (SUPERVISING ARCHITECT'S OFFICE).

Legal residence.	Examined.	Passed.							Failed.						
		Number.	Average age.	Education.					Number.	Average age.	Education.				
				Common school.	Academic.	Business college.	High school.	Collegiate.			Common school.	Academic.	Business college.	High school.	Collegiate.
Illinois	1	.....	.....	....	....	....	....	....	1	25	....	....	....	....	1
Massachusetts	1	.....	.....	....	....	....	....	....	1	21	....	....	....	1	....
Total	2	.....	.....	....	....	....	....	....	2	23	....	....	....	1	1

b HEATING AND VENTILATING EXPERT (SUPERVISING ARCHITECT'S OFFICE).

New York	1	.....	.....	....	....	....	....	....	1	56	1	....	....	....	....
Pennsylvania	1	.....	.....	....	....	....	....	....	1	37	1	....	....	....	....
Total	2	.....	.....	....	....	....	....	....	2	46+	2	....	....	....	....

c CONSTRUCTOR IN METAL (SUPERVISING ARCHITECT'S OFFICE).

New York	1	1	27	....	....	....	....	1	.....	.....	....	....	....	....	....
Massachusetts	3	.....	.....	....	....	....	....	....	3	24—	1	....	....	....	2
Pennsylvania	2	1	34	....	....	....	....	1	1	51	....	....	....	1	....
Total	6	2	30+	....	....	....	....	2	4	31—	1	....	....	1	2

16.—*Showing the number who took special examination for the position of law clerk e office of the Judge-Advocate-General, War Department, the number that passed hat failed, the legal residence, average age, and education, during the year ended* 30, 1889.

LAW CLERK (DEPARTMENTAL).

al residence.	Examined.	Passed.							Failed.						
		Number.	Average age.	Education.					Number.	Average age.	Education.				
				Common school.	Academic.	Business college.	High school.	Collegiate.			Common school.	Academic.	Business college.	High school.	Collegiate.
sas	1	1	23	....	....	....	....	1	.....	....	....	..	....	....	....
t of Columbia	1	1	50	....	....	....	....	1	.....	.....	....	....	....	....	....
a	1	1	22	....	....	....	....	1	.....	.....	....	....	....	....	....
a	1	1	30	....	....	....	1	....	.....	.....	....	....	....	....	....
a	2	2	30	....	....	....	....	2	.....	.....	....	....	....	....	....
cky	2	2	35	1	....	....	....	1	.....	.....	....	....	....	....	....
chusetts	1	1	40	....	....	....	....	1	.....	.....	....	....	....	....	....
gan	2	.....	.....	....	....	....	....	....	2	32+	1	....	....	....	1
Hampshire	1	1	29	....	....	....	....	1	.....	.....	....	....	....	....	....
York	2	1	27	....	....	....	1	....	1	50	....	1	....	....	....
a Carolina	1	1	28	....	....	....	....	1	....	....	....	....	....	....	....
	2	1	30	1	....	....	....	....	1	27	....	....	....	1	....
sylvania	1	1	28	....	....	....	1	....	.....	....	....	....	....	....	....
a Carolina	1	1	25	....	....	....	....	1	.....	....	....	....	....	....	....
essee	1	1	29	....	....	....	....	1	.....	....	....	....	....	....	....
Total	20	16	30+	2	....	....	3	11	4	35+	1	1	....	1	1

above twenty competitors were examined during the last year for promotion as law clerks in ar Department and during the current year were permitted to take the clerical part of the exation with a view to becoming eligible to original appointment as law clerks in any department.

.E 17.—*Showing number who took special examinations for positions in the Departnt of Agriculture, the number that passed and that failed, the legal residence, arer age, and education, during the year ended June* 30, 1889.

YTANICAL AND MICROSCOPICAL ARTIST (DEPARTMENT OF AGRICULTURE).

gal residence.	Examined.	Passed.								Failed.							
		Number.		Average age.	Education.					Number.		Average age.	Education.				
		Male.	Female.		Common school.	Academic.	Business college.	High school.	Collegiate.	Male.	Female.		Common school.	Academic.	Business college.	High school.	Collegiate.
ne	1	1	...	24	....	....	....	....	1	....	....	.....	....	....	....	....	....
higan	1	....	1	35	....	....	....	....	1	....	....	.....	....	....	....	....	....
nsylvania	1	1	....	23	....	....	....	....	1	....	....	.....	....	....	....	....	....
Total	3	2	1	27+	....	....	....	....	3	....	....	.....	....	....	....	....	....

ASSISTANT CHEMIST (DEPARTMENT OF AGRICULTURE).

ryland	2	....	....	.....	....	....	....	..	....	2	...	23–	....	....	....	....	2
higan	1	1	...	26	....	....	....	1	....	....	....	.....	....	....	....	....	....
w Jersey	1	1	....	20	....	....	....	....	1	....	....	.....	....	....	....	....	....
th Carolina	1	1	....	24	....	....	....	....	1	....	....	.....	....	....	....	....	....
e	1	1	....	22	1	....	....	....	....	....	....	.....	....	....	....	....	....
ginia	1	....	....	.....	....	....	....	....	....	1	....	25	1	....	....	....	....
Total	7	4	....	23	1	....	....	1	2	3	....	23+	1	....	....	....	2

TABLE 17.—*Showing number who took special examinations for positions in the Department of Agriculture, etc.*—Continued.

EDITOR AND CLERK (BUREAU OF EXPERIMENT STATIONS, DEPARTMENT OF AGRICULTURE.

Legal residence.	Examined.	Passed.								Failed.							
		Number.		Average age.	Education.					Number.		Average age.	Education.				
		Male.	Female.		Common school.	Academic.	Business college.	High school.	Collegiate.	Male.	Female.		Common school.	Academic.	Business college.	High school.	Collegiate.
Connecticut	2	1	....	35	....	....	....	....	1	1	....	25	....	....	....	....	1
Maryland	1	....	....	.....	....	....	....	..	....	1	....	35	....	....	....	....	1
New York	2	....	....	.....	....	....	....	....	....	2	....	36+	....	1	....	....	1
Ohio	1	....	....	.....	....	....	....	....	....	1	....	26	....	....	....	....	1
Oregon	1	....	....	.....	....	....	....	....	....	1	....	43	....	....	....	....	1
Virginia	2	....	....	.....	....	....	....	....	....	2	....	35+	....	....	....	..	2
Total	9	1	....	35	....	....	....	....	1	8	....	34+	....	1	....	....	7

TRANSLATOR (DEPARTMENT OF AGRICULTURE).

District of Columbia	3	2	1	34+	....	1	....	....	2	....	....	.....	....	....	..	....	....
Maryland	1	....	1	38	....	....	....	1	....	....	....	.....	....	....	..	....	....
New York	1	1	....	56	....	....	....	....	1	....	....	.....	....	....	..	..	....
Pennsylvania	1	....	1	43	....	....	....	1	....	....	....	.....	....	....	..	....	..
Virginia	1	1	....	33	....	....	....	....	1	....	....	.....	....	....	..	....	....
Total	7	4	3	39	....	1	....	2	4	....	....	.....	....	....	....	....	....

VEGETABLE PATHOLOGIST (DEPARTMENT OF AGRICULTURE).

Illinois	1	1	....	23	....	....	....	....	1	....	....	.....	....	....	....	..	....

TABLE 18.—*Showing the number who took the special examination for the position of proof-reader in the office of the Geological Survey, Interior Department, the number that passed and that failed, the legal residence, average age, and education, during the year ended June* 30, 1885.

PROOF-READER (GEOLOGICAL SURVEY).

[All males.]

Legal residence.	Examined.	Passed.								Failed.							
		Number.	Average age.	Education.						Number.	Average age.	Education.					
				Common school.	Academic.	Business college.	High school.	Collegiate.				Common school.	Academic.	Business college.	High school.	Collegiate.	
Colorado	1	.....	.....	....	....	....	....	....		1	49	1	....	....	....	....	
Maryland	1	.....	.....	....	....	....	....	....		1	28	....	1	..	....	....	
Michigan	1	.....	.....	....	....	....	....	....		1	29	....	....	....	....	1	
Minnesota	1	.....	.....	....	....	....	....	....		1	32	....	1	....	....	..	
New York	1	1	65	1	..	....	....	....		.....	.....	....	....	....	....	....	
North Carolina	1	1	25	1	....	....	....	....		.....	.....	....	....	....	..	..	
Virginia	2	.....	.....	....	....	....	....	....		2	49+	1	1	..	....	....	
Total	8	2	45	2	....	....	....	....		6	39+	2	3	....	....	1	

TABLE 19.—*Showing the number who took the special examination for the position of craniological expert in the Surgeon-General's Office, War Department, the number that passed and that failed, the legal residence, average age, and education, during the year ended June 30, 1889.*

CRANIOLOGICAL EXPERT (SURGEON-GENERAL'S OFFICE).

Legal residence.	Examined.	Passed.							Failed.						
		Number.	Average age.	Education.					Number.	Average age.	Education.				
				Common school.	Academic.	Business college.	High school.	Collegiate.			Common school.	Academic.	Business college.	High school.	Collegiate.
Massachusetts	1	1	21	....	....	....	....	1	....	....	....	....	....	....	....

TABLE 20.—*Showing the number who took special examination for the position of printer's assistant and skilled helper in the Bureau of Engraving and Printing, Treasury Department, the number that passed and that failed, the legal residence, average age, and education, during the year ended June 30, 1889.*

PRINTER'S ASSISTANT.

[All females.]

Legal residence.	Examined.	Passed.							Failed.						
		Number.	Average age.	Education.					Number.	Average age.	Education.				
				Common school.	Academic.	Business college.	High school.	Collegiate.			Common school.	Academic.	Business college.	High school.	Collegiate.
California	2	2	18+	1	....	....	1	....	....	....	....	....	....	....	....
Connecticut	2	2	21+	2	....	....	....	....	....	....	....	....	....	....	....
District of Columbia	91	67	21—	41	11	..	15	....	24	22	21	3	....	..	....
Illinois	1	....	....	....	....	....	....	..	1	18	1	....	....	....	....
Indiana	3	2	19	1	....	....	....	1	1	36	1	....	....	....	....
Maryland	15	11	22—	6	3	....	1	1	4	20	3	1	....	....	....
Massachusetts	1	1	20	....	....	....	1	....	....	....	..	....	....	....	....
New Hampshire	1	1	19	1	....	....	....	....	....	....	....	....	....	....	....
New York	6	5	26	4	....	....	1	....	1	32	1	....	....	....	....
North Carolina	3	3	23—	2	....	....	....	1	....	....	..	....	....	....	....
Ohio	2	2	27+	1	....	....	1	..	....	....	....	....	....	....	....
Pennsylvania	2	2	19+	1	1	....	..	....	....	....	....	....	....	....	....
South Carolina	1	1	18	....	....	..	....	1	....	....	....	....	....	....	....
Tennessee	1	1	18	1	....	....	....	....	....	....	....	....	....	....	....
Virginia	17	11	20+	3	5	....	3	....	6	24—	3	....	....	2	1
Wisconsin	1	....	....	....	....	....	....	....	1	19	1	....	....	....	....
Total	149	111	21+	64	20	....	23	4	38	23—	31	4	....	2	1

SKILLED HELPER.

[All males.]

District of Columbia	25	21	31—	17	....	1	1	2	4	30—	3	1	....	....	....
Kentucky	1	1	20	1	....	....	....	....	....	....	....	....	....	....	....
Maryland	3	2	28	2	....	....	....	....	1	48	1	....	..	....	....
New York	1	1	21	1	....	....	....	....	....	....	....	....	....	....	....
North Carolina	3	3	36—	....	....	....	1	2	....	....	....	....	....	....	....
Ohio	1	1	21	....	....	....	1	....	....	....	....	....	....	....	....
Virginia	3	....	....	....	....	....	....	....	3	43—	2	....	....	1	....
Total	37	29	30+	21	....	1	3	4	8	37—	6	1	....	1	....

TABLE 21.—*Showing the number who took non-competitive examinations under the provisions of General Rule III, section 2, clause c, the number that passed and that failed, the legal residence, average age, and education, during the year ended June* 30, 1889.

a MODEL ATTENDANTS (PATENT OFFICE).*

Legal residence.	Examined.	Passed.								Failed.							
		Number.		Average age.	Education.					Number.		Average age.	Education.				
		Male.	Female.		Common school.	Academic.	Business college.	High school.	Collegiate.	Male.	Female.		Common school.	Academic.	Business college.	High school.	Collegiate.
Copyists:																	
Georgia	2	....	1	50	....	....	....	....	1	....	1	50	....	..	....	....	1
New York	3	....	1	37	....	....	....	1	....	1	1	49	....	1	....	1	....
Ohio	1	....	1	30	....	....	....	1	....	....	....	.....	....	....	....	....	....
Pennsylvania	2	....	....	.....	....	....	....	....	....	2	....	53	..	2	..	....	....
Clerks:																	
Illinois	2	1	....	45	....	....	....	....	1	1	....	45	....	....	....	..	1
New York	2	....	1	22	....	....	....	....	1	....	1	56	....	1	....	....	....
Wisconsin	1	1	....	24	....	1	....	....	....	....	....	.....	....	....	....	....	....
Total	13	2	4	35—	....	1	..	2	3	4	3	51—	....	4	....	1	2

b MONEY COUNTERS (TREASURY DEPARTMENT).

[Copyist examination and practical test in counting money.]

California	1	1	..	20	....	1	....	..	....	....	....	.....	....	....	....	....	....
Connecticut	1	....	1	24	....	....	....	1	....	....	....	.....	....	....	....	....	....
District of Columbia	1	....	1	21	....	....	....	1	....	....	....	.....	....	....	....	....	....
Maryland	1	..	1	27	1	....	..	..	....	....	....	.....	....	....	....	....	....
Michigan	1	1	....	20	....	..	..	1	....	....	....	.....	....	....	....	....	....
Total	5	2	3	22+	1	1	...	3	....	....	....	.....	....	....	....	....	....

c STEAM ENGINEER (POST-OFFICE DEPARTMENT).†

[Technical examination, steam engineering.]

District of Columbia	2	1	....	40	1	....	....	....	....	1	....	40	1	....	....	....	....

d STEAM AND ELECTRIC ENGINEER (DEPARTMENT OF THE INTERIOR).

[Technical examination, steam and electric engineering.]

Ohio	2	2	....	38	1	...	..	1	....	....	....	.....	....	....	....	....	....

e ASSISTANT STEAM ENGINEER (POST-OFFICE DEPARTMENT).‡

[Technical examination, steam engineering.]

Maryland	2	....	....	.....	....	....	....	....	....	2	....	35	2	....	....	....	....
Michigan	1	1	....	28	1	..	....	....	....	....	....	.....	....	..	..	....	....
Wisconsin	2	1	....	24	1	....	..	....	....	1	..	21	1	..	..	....	....
Total	5	2	...	26	2	....	....	....	....	3	..	31+	3	....	..	..	..

*The thirteen examinations reported in this table represent nine individual candidates, four of whom were allowed re-examination

†These two examinations represent only one candidate, who was allowed re-examination.

‡The se five examinations represent only three candidates, two of whom were allowed re-examination

TABLE 21.—*Showing the number who took non-competitive examinations under the provisions of General Rule III, section 2, clause e, etc.*—Continued.

f FIREMAN (TREASURY DEPARTMENT).*

[Technical examination, rudiments of steam engineering.]

Legal residence.	Examined.	Passed.								Failed.							
		Number.			Education.					Number.			Education.				
		Male.	Female.	Average age.	Common school.	Academic.	Business college.	High school.	Collegiate.	Male.	Female.	Average age.	Common school.	Academic.	Business college.	High school.	Collegiate.
District of Columbia	4	3	....	26	3	....	....	....	....	1	....	25	1	....	....	....	....
Maryland	1	1	....	41	....	....	....	....	1	....	....	.....	....	....	....	....	....
New York	1	1	....	27	....	1	....	....	....	....	....	.....	....	....	....	....	....
Total	6	5	....	29+	3	1	....	....	1	1	....	25	1	....	....	....	....

g FOREMAN OF LABORERS (TREASURY DEPARTMENT).

[Copyist examination.]

Wisconsin	1	....	....	.....	....	....	....	....	....	1	....	26	....	1	....	....	....

h STORE-KEEPER (TREASURY DEPARTMENT).

[Clerk examination.]

New York	1	....	....	.....	....	....	....	....	....	1	....	45	1	....	....	....	....
Pennsylvania	1	....	....	.....	....	....	....	....	....	1	....	53	....	1	....	....	....
Total	2	....	....	.....	....	....	....	....	....	2	....	49	1	1	....	....	....

i SKILLED LABORER (TREASURY DEPARTMENT).

[Copyist examination.]

Massachusetts	1	1	....	48	1	....	....	....	....	....	....	.....	....	....	....	....	....
Minnesota	1	....	....	.....	....	....	....	....	....	1	....	43	1	....	....	....	....
Total	2	1	....	48	1	....	....	....	....	1	....	43	1	....	....	....	....

k CAPTAIN OF THE WATCH (TREASURY DEPARTMENT).†

[Copyist examination.]

Pennsylvania	2	....	....	.....	....	....	....	....	....	2	....	44	2	....	....	....	....

l LIEUTENANT OF THE WATCH (TREASURY DEPARTMENT.)

[Copyist examination.]

New York	1	1	....	48	1	....	....	....	....	....	....	.....	....	....	....	....	....

* These six examinations represent only five candidates, one of whom was allowed re-examination.
† These two examinations *represent only one* candidate, who was allowed re-examination.

TABLE 21.—*Showing the number who took non-competitive examinations under the provisions of General Rule III, section 2, clause c, etc.*—Continued.

m CAPTAIN OF THE WATCH (POST-OFFICE DEPARTMENT).*

[Copyist examination.]

Legal residence.	Examined.	Passed.								Failed.							
		Number.		Average age.	Education.					Number.		Average age.	Education.				
		Male.	Female.		Common school.	Academic.	Business college.	High school.	Collegiate.	Male.	Female.		Common school.	Academic.	Business college.	High school.	Collegiate.
Pennsylvania	2	....	....	.....	....	....	....	....	....	2	....	47	2	....	....	....	....

n SUPERINTENDENT PENSION BUREAU BUILDING (INTERIOR DEPARTMENT).*

[Customs night inspector examination.]

Wisconsin	2	1	....	48	1	....	....	....	....	1	....	48	1	....	....	....	....

o ASSISTANT DISBURSING CLERK (DEPARTMENT OF THE INTERIOR).*

[Clerk examination.]

District of Columbia	2	1	....	30	1	....	....	....	....	1	....	30	1	....	....	....	....

p RETURN CLERK (DEPARTMENT OF THE INTERIOR).

[Clerk examination.]

Kentucky	1	1	....	54	....	....	....	1	....	....	....	.....	..	....	....	....	....

q SPECIAL AGENT (DEPARTMENT OF LABOR).

[Clerk examination.]

Missouri	1	....	....	.....	....	....	....	....	....	1	....	43	1	....	....	....	....

r ASSISTANT PHOTOGRAPHER (DEPARTMENT OF THE INTERIOR).

[Technical examination, photography.]

District of Columbia	1	1	....	25	1	....	....	....	....	....	....	.....	....	....	....	....	....

s NAUTICAL EXPERT (HYDROGRAPHIC STATIONS, NAVY DEPARTMENT).

[Technical examination, nautical science.]

California	1	1	....	21	....	1	....	....	....	....	....	.....	....	....	....	....	....
Kentucky	1	1	....	22	....	....	....	....	1	....	....	.....	....	....	....	....	....
New York	1	1	....	23	....	1	....	....	....	....	....	.....	....	....	....	....	....
Total	3	3	....	22	....	2	....	....	1	....	....	.....	....	....	....	....	....

t PRESSMAN (DEPARTMENT OF AGRICULTURE).

[Technical examination, practical press-work.]

District of Columbia	1	1	....	23	1	....	....	....	....	....	....	.....	....	....	....	....	....

*These two examinations represent only one candidate, who was allowed re-examination.

TABLE 22.—*Showing the number who took examinations under the provisions of General Rule III, section 2, clause c, the number that passed and that failed, the legal residence, average age, and education, during the year ended June* 30, 1889.

COPYIST.

Legal residence.	Examined.	Passed.								Failed.							
		Male.	Female.	Average age.	Education.					Male.	Female.	Average age.	Education.				
					Common school.	Academic.	Business college.	High school.	Collegiate.				Common school.	Academic.	Business college.	High school.	Collegiate.
Alabama	3	1	2	23	1	....	....	....	2	....	....	.....	....	....	....	....	....
California	1	....	1	46	....	....	....	1	....	....	....	.....	....	....	....	....	....
Colorado	1	....	1	27	1	....	....	....	....	....	....	.....	....	....	....	....	....
Connecticut	1	....	1	24	....	....	....	1	....	....	....	.....	....	....	....	....	....
Illinois	1	....	....	.....	....	....	....	....	....	....	1	43	....	1	....	....	....
Kansas	1	1	....	44	1	....	....	....	....	....	....	.....	....	....	....	....	....
Kentucky	2	1	....	72	1	....	....	....	....	1	....	72	1	....	....	....	....
Louisiana	1	....	1	33	....	....	....	....	1	....	....	.....	....	....	....	....	....
Maryland	6	2	2	25	4	....	....	....	....	2	....	28	2	....	....	....	....
Mississippi	3	1	1	37+	1	....	....	....	1	....	1	55	....	....	....	....	1
North Carolina	2	....	2	46	....	....	....	1	1	....	....	.....	....	....	....	....	....
New York	4	2	1	39	1	2	....	....	....	....	1	44	1	....	....	....	....
Pennsylvania	6	3	....	32—	2	1	....	....	....	2	1	34+	2	1	....	....	....
South Carolina	1	....	....	.....	....	....	....	....	....	1	....	47	....	....	....	....	1
Tennessee	4	....	....	.....	....	....	....	....	....	....	4	33+	4	....	....	....	....
Virginia	7	3	2	35—	1	1	....	....	3	....	2	39	....	....	....	....	2
West Virginia	3	....	2	24+	1	....	....	....	1	....	1	45	....	....	....	....	1
Georgia	1	....	1	26	1	....	....	....	....	....	....	.....	....	....	....	....	....
District of Columbia	10	5	3	21+	6	....	....	1	1	2	....	36	2	....	....	....	....
Total (copyists)	58	19	20	31+	21	4	....	4	10	8	11	38—	12	2	....	....	5

CLERK.

Kansas	2	....	....	.....	....	....	....	....	....	2	....	44+	2	....	....	....	....
New Hampshire	1	....	....	.....	....	....	....	....	....	1	....	55	....	1	....	....	....
New York	1	....	....	.....	....	....	....	....	....	1	....	55	1	....	....	....	....
District of Columbia	3	1	1	24	....	1	....	1	....	1	....	28	....	1	....	....	....
Total (clerks)	7	1	1	24	....	1	....	1	....	5	....	39.5	3	2	....	....	....
Grand total	65	....	....	.....	....	....	....	....	....	....	....	.....	....	....	....	....	....

The sixty-five examinations reported on this table represent only fifty-two individual candidates. Two of those recorded in the column of clerks failed took re-examinations, and are reported in the column of copyists passed; one clerk failed is also reported a clerk passed; five are reported as copyists failed, and also copyists passed, and five failed on a second trial in the copyist examination, and appear twice in column of copyists failed.

TABLE 23.—*Showing the number who took examinations under the provisions of Special Departmental Rule II, the number that passed and that failed, the legal residence, average age, and education, during the year ended June* 30, 1889.

COPYIST.

Legal residence.	Examined.	Passed.								Failed.							
		Male.	Female.	Average age.	Education.					Male.	Female.	Average age.	Education.				
					Common school.	Academic.	Business college.	High school.	Collegiate.				Common school.	Academic.	Business college.	High school.	Collegiate.
District of Columbia.	2	....	....	.....	....	....	....	....	....	....	2	34	2	....	....	....	....
New York	1	1	....	33	....	1	....	....	....	....	....	.....	....	....	....	....	....
North Carolina	1	....	1	33	1	....	....	....	....	....	....	.....	....	....	....	....	....
Pennsylvania	2	....	....	.....	....	....	....	....	....	....	2	51	2	....	....	....	....
Total	6	1	1	33	1	1	....	....	....	....	4	42+	4	....	....	....	....

CLERK.

New Jersey	3	....	1	44	1	....	....	....	....	....	2	42	2	....	....	....	....
Total	3	....	1	42	1	....	....	....	....	....	2	42	2	....	....	....	....
Grand total	9	....	....	.....	....	....	....	....	....	....	....	.....	....	....	....	....	....

The above nine examinations represent five candidates, two of them having been allowed one re-examination and one two re-examinations.

PROMOTION EXAMINATIONS.

No examinations for promotion were held in the War Department, the only Department to which the rules of the Civil Service Commission for such examinations apply, during the year.

In the fifth report of the Civil Service Commission, on page 18, in the Recapitulation of table 8, the promotion examination for the Signal Office should have been stated as follows: Aggregate, 12; passed, 8; failed, 4.

TABLE 24.—*Showing the number who took examinations under the provisions of General Rule III, paragraph 2, clause b, and Departmental Rule II, section 4, the number that passed and that failed, the legal residence, average age, and education, during the year ended June 30, 1889.*

Legal residence.	Examined.	Passed.							Failed.						
				Education.							Education.				
		Number.	Average age.	Common school.	Academic.	Business college.	High school.	Collegiate.	Number.	Average age.	Common school.	Academic.	Business college.	High school.	Collegiate.
District of Columbia	1	1	39	....	....	....	1	....	.....	.....	....	....	....	..	....
Illinois	3	2	47	....	....	....	....	2	1	31	..	....	....	1	....
Massachusetts	2	1	55	....	....	....	....	1	1	55	....	....	....	..	1
Ohio	2	1	56	....	....	....	....	1	1	56	....	....	....	..	1
Pennsylvania	2	2	43+	1	1	....	....	....	.....	....	..	....	....	..	....
Virginia	1	1	32	....	....	....	....	1	....	.....	....	....	..	....	....
Total	11	8	45+	1	1	....	1	5	3	47+	....	....	....	1	2

These eleven examinations represent nine candidates, two of whom were allowed re-examinations. One of the candidates was examined as librarian and bibliographer, one took the State Department examination and one a special law examination; the rest were examined as clerks.

TABLE 25.—*Showing the number who took examinations for transfer under the provisions of Departmental Rule VIII, section 1, clause a, the number that passed and that failed, during the year ended June 30, 1889.*

	Passed.		Failed.		Total examined.
	Male.	Female.	Male.	Female.	
Copyist	1	14	.....	3	36
Clerk	11	4	.....	3	

Of those reported in the column of clerks, male, one passed the topographic draftsman examination and one the copyist examination with stenography and type-writing. One of those reported in the column of clerks, male, as having failed, took the post-office inspector examination. The three competitors reported in the column of copyists, female, as having failed, subsequently passed the examination, and are included in the column of copyists, female, passed.

TABLE 26.—*Showing the number (males) who took examinations for transfers under the provisions of Departmental Rule VIII, section 1, clause c, the number that passed and that failed, and the legal residence, during the year ended June 30, 1889.*

Legal residence.	Copyist.		Clerk.		Post-office inspector.		Examined.
	Passed.	Failed.	Passed.	Failed.	Passed.	Failed.	
Alabama	.....	1	.....	.....	.....	.....	1
District of Columbia	1	.....	.....	.....	.....	.....	1
Illinois	.....	.....	.....	1	.....	.....	1
Maryland	.....	.....	1	.....	.....	.....	1
New York	.....	.....	.....	.....	1	.....	1
Ohio	.....	.....	.....	.....	1	.....	1
Pennsylvania	.....	.....	.....	.....	1	.....	1
Total	1	1	1	1	3	.....	7

The three competitors who took the post-office inspector examination were for transfer from the Railway Mail Service, and all others from local post-offices.

TABLE 27.—*Showing the number who took examinations for promotion under the provisions of Departmental Rule IX, section 1, clause b, the number that passed and that failed, during the year ended June 30, 1889.*

	Male.	Female.	Total examined.
Passed	11	15	27
Failed	1	.....	

One candidate took the book-keeper examination; all the others the clerk examination.

TABLE 28.—*Showing the number who took supplementary examinations, the number that*

	Legal residence.	Type-writing.				Stenography.				Law.	
		Passed.		Failed.		Passed.		Failed.		Passed.	Failed.
		Male.	Female.	Male.	Female.	Male.	Female.	Male.	Female.	Male.	Male.
1	Alabama	.....	1	.....	.....	.....	1	.....	.....	.....	.....
2	Arizona	.....	.....	.....	.....	.....	.....	.....	.....	.....	.....
3	Arkansas	.....	.....	1	.....	.....	.....	.....	.....	1	1
4	California	.....	.....	2	2	1	.....	.....	.....	2	.....
5	Colorado	1	1	1	1	.....	.....	2	.....	.....	.....
6	Connecticut	1	.....	.....	.....	.....	.....	2	.....	.....	.....
7	Dakota	.....	1	.....	.....	.....	.....	.....	.....	.....	.....
8	Delaware	.....	.....	.....	.....	.....	.....	.....	.....	.....	.....
9	District of Columbia	1	.....	.....	.....	1	.....	.....	.....	.....	.....
10	Florida	.....	1	.....	.....	.....	1	.....	.....	.....	.....
11	Georgia	2	.....	1	.....	.....	.....	4	5	1	.....
12	Idaho	.....	.....	.....	.....	.....	.....	.....	.....	.....	.....
13	Illinois	1	4	1	3	1	.....	2	2	1	1
14	Indiana	.....	5	1	8	.....	.....	2	7	2	3
15	Iowa	.....	7	1	1	.....	.....	.....	2	.....	1
16	Kansas	2	2	3	1	2	.....	3	1	1	.....
17	Kentucky	1	1	.....	1	.....	.....	1	2	.....	.....
18	Louisiana	.....	.....	.....	.....	.....	.....	.....	.....	.....	.....
19	Maine	.....	1	.....	3	.....	.....	.....	.....	.....	1
20	Maryland	3	4	2	7	2	.....	4	6	.....	.....
21	Massachusetts	.....	1	.....	1	1	.....	2	.....	1	.....
22	Michigan	2	1	.....	2	.....	1	2	2	.....	.....
23	Minnesota	2	1	.....	2	.....	1	3	1	.....	.....
24	Mississippi	.....	.....	.....	.....	.....	.....	.....	.....	1	.....
25	Missouri	4	3	1	2	.....	.....	4	5	.....	2
26	Montana	.....	.....	.....	.....	.....	.....	.....	.....	.....	.....
27	Nebraska	.....	.....	.....	.....	.....	.....	.....	.....	.....	.....
28	Nevada	.....	.....	.....	.....	.....	.....	.....	.....	.....	.....
29	New Hampshire	.....	.....	.....	.....	.....	.....	.....	.....	.....	.....
30	New Jersey	.....	3	1	1	1	1	3	1	.....	.....
31	New Mexico	1	.....	.....	.....	.....	.....	.....	.....	.....	.....
32	New York	7	16	4	7	7	3	4	8	1	.....
33	North Carolina	.....	.....	.....	.....	.....	.....	.....	.....	1	.....
34	Ohio	2	4	2	5	.....	1	3	7	4	.....
35	Oregon	.....	.....	.....	.....	.....	.....	.....	.....	.....	.....
36	Pennsylvania	2	6	.....	7	2	1	4	8	2	.....
37	Rhode Island	.....	.....	.....	.....	.....	.....	.....	.....	.....	.....
38	South Carolina	.....	.....	.....	2	.....	.....	.....	.....	.....	.....
39	Tennessee	.....	.....	.....	.....	.....	.....	.....	.....	.....	.....
40	Texas	.....	1	.....	1	.....	1	.....	.....	.....	.....
41	Utah	.....	.....	.....	.....	.....	.....	.....	.....	.....	.....
42	Vermont	.....	.....	.....	1	.....	.....	.....	.....	.....	.....
43	Virginia	2	5	1	4	.....	.....	4	1	2	1
44	Washington	.....	1	.....	.....	.....	.....	.....	.....	.....	.....
45	West Virginia	.....	1	.....	1	1	.....	.....	.....	.....	.....
46	Wisconsin	1	1	1	2	.....	1	3	2	.....	.....
47	Wyoming	.....	.....	.....	.....	.....	.....	.....	.....	.....	.....
	Total	35	72	23	65	19	12	52	60	20	10

The 195 examinations reported in the column of type-writers represent only 178 individual candi- of stenographers represent only 126 individual candidates, 12 of whom were examined twice, one three General Rule III, paragraph 2, clause *c*, and the candidate failed on the fifth trial. In addition to were re-examinations of persons who had failed during the previous year. One hundred and four and twenty-two in stenography alone.

passed and that failed, and the legal residence, during the year ended June 30, 1889.

French.				German.				Spanish.		Italian.		Portuguese.				
Passed.		Failed.		Passed.		Failed.		Passed.		Passed.		Passed.		Failed.		
Male.	Female.	Male.	Female.	Male.	Female.	Male.	Female.	Male.	Female.	Male.	Female.	Male.	Female.	Male.	Female.	
	*															
																1
																2
1				1												3
	1															4
																5
1				1				1								6
																7
																8
2			1	1	1	1		2	1	2		2	1			9
1																10
																11
																12
	1															13
	1						1									14
																15
																16
1																17
																18
					1											19
1	1			1	2				1		1		1			20
1			1	1				1								21
																22
		1		2		2										23
	1				1											24
																25
																26
																27
																28
		1														29
	1															30
																31
2	1			1		2		2		2				1		32
																33
		2				1										34
																35
1	2		1	2	1		2		1		1				1	36
																37
1																38
				1												39
	1															40
																41
				1												42
	1			2												43
																44
1				1				1		1						45
1				1												46
																47
14	11	4	3	16	6	6	3	7	3	5	2	2	2	1	1	

*dates, 16 of whom were examined twice during the year. The 143 examinations reported in the column times, and one five times. The last-mentioned examination was non-competitive, for promotion under the re-examinations during the year ten of those reported only once in type-writing and stenography, persons took examinations in both type-writing and stenography, seventy-four in type-writing alone,

TABLE 28.—*Showing the number who took supplementary examinations, the number that*

	Legal residence.	Danish.		Chinese.		Japanese.		Proof-reading.			
		Passed.		Passed.		Passed.		Passed.		Failed.	
		Male.	Female.	Male.	Female.	Male.	Female.	Male.	Female.	Male.	Female.
1	Alabama										
2	Arizona										
3	Arkansas									1	
4	California							1			
5	Colorado							1			
6	Connecticut										
7	Dakota										
8	Delaware										
9	District of Columbia										
10	Florida										
11	Georgia										1
12	Idaho										
13	Illinois							1			
14	Indiana										
15	Iowa										
16	Kansas							1		1	
17	Kentucky									1	
18	Louisiana										
19	Maine										
20	Maryland										
21	Massachusetts							1			
22	Michigan										1
23	Minnesota	1									
24	Mississippi										
25	Missouri										
26	Montana										
27	Nebraska										
28	Nevada										
29	New Hampshire										
30	New Jersey										2
31	New Mexico										
32	New York										1
33	North Carolina									1	
34	Ohio									2	
35	Oregon										
36	Pennsylvania			1		1				1	
37	Rhode Island										
38	South Carolina										
39	Tennessee										
40	Texas										
41	Utah										
42	Vermont										
43	Virginia										
44	Washington										
45	West Virginia							1			1
46	Wisconsin									1	
47	Wyoming										
	Total	1		1		1		6		8	6

passed and that failed, and the legal residence, during the year ended June 30, 1889—Cont'd.

Telegraphy.				Medical science.				Summary.					
Passed.		Failed.		Passed.		Failed.		Passed.		Failed.			
Male.	Female.	Male.	Female.	Male.	Female.	Male.	Female.	Male.	Female.	Male.	Female.	Aggregate.	
.....	.....	.....	.....	.....	.....	.....	.....	.....	2	.....	.....	2	1
.....	.....	.....	.....	.....	.....	.....	.....	.....	.....	.....	.....	.....	2
.....	.....	.....	.....	.....	.....	.....	.....	3	.....	3	.....	6	3
.....	.....	.....	.....	1	.....	.....	.....	5	1	2	2	10	4
.....	.....	.....	.....	.....	.....	.....	.....	2	1	3	1	7	5
.....	.....	.....	.....	.....	.....	.....	.....	4	.....	2	.....	6	6
.....	.....	.....	.....	.....	.....	.....	.....	.....	1	.....	.....	1	7
.....	.....	.....	.....	.....	.....	.....	.....	.....	.....	.....	.....	.....	8
.....	.....	.....	.....	.....	.....	.....	.....	11	3	1	1	16	9
.....	.....	.....	.....	.....	.....	.....	.....	.....	2	.....	.....	2	10
.....	.....	.....	.....	.....	.....	.....	.....	4	.....	5	6	15	11
.....	.....	.....	.....	.....	.....	.....	.....	.....	.....	.....	.....	.....	12
.....	.....	.....	.....	1	.....	.....	.....	5	5	4	5	19	13
.....	.....	.....	.....	.....	.....	1	.....	2	6	7	16	31	14
.....	.....	.....	.....	.....	.....	.....	.....	.....	7	2	3	12	15
.....	.....	.....	.....	.....	.....	.....	.....	6	2	7	2	17	16
.....	.....	.....	.....	.....	.....	.....	.....	2	1	2	3	8	17
.....	.....	.....	.....	.....	.....	.....	.....	.....	.....	.....	.....	.....	18
.....	.....	.....	.....	.....	.....	.....	.....	.....	2	1	3	6	19
.....	.....	.....	.....	.....	.....	.....	.....	7	10	6	13	36	20
.....	.....	.....	.....	.....	.....	.....	.....	6	1	2	2	11	21
.....	.....	.....	.....	.....	.....	.....	.....	2	2	2	5	11	22
.....	.....	.....	.....	.....	.....	.....	.....	5	2	6	3	16	23
.....	.....	.....	.....	.....	.....	.....	.....	1	2	.....	.....	3	24
.....	.....	.....	.....	.....	.....	.....	.....	4	3	7	7	21	25
.....	.....	.....	.....	.....	.....	.....	.....	.....	.....	.....	.....	.....	26
.....	.....	.....	.....	.....	.....	.....	.....	.....	.....	.....	.....	.....	27
.....	.....	.....	.....	.....	.....	.....	.....	.....	.....	.....	.....	.....	28
.....	.....	.....	.....	.....	.....	.....	.....	.....	.....	1	.....	1	29
.....	.....	.....	.....	.....	.....	.....	.....	1	5	4	4	14	30
.....	.....	.....	.....	.....	.....	.....	.....	1	.....	.....	.....	1	31
.....	.....	.....	.....	.....	.....	.....	.....	22	20	11	16	69	32
.....	.....	.....	.....	.....	.....	.....	.....	.....	.....	1	.....	1	33
.....	.....	.....	.....	.....	.....	1	.....	6	5	11	12	34	34
.....	.....	.....	.....	.....	.....	.....	.....	.....	.....	.....	.....	.....	35
.....	.....	.....	1	.....	.....	.....	1	11	12	5	21	49	36
.....	.....	.....	.....	.....	.....	.....	.....	.....	.....	.....	.....	.....	37
.....	.....	.....	.....	.....	.....	.....	.....	1	.....	.....	2	3	38
.....	.....	.....	.....	.....	.....	.....	.....	1	.....	.....	.....	1	39
.....	.....	.....	.....	.....	.....	.....	.....	.....	3	.....	1	4	40
.....	.....	.....	.....	.....	.....	.....	.....	.....	.....	.....	.....	.....	41
.....	.....	.....	.....	.....	.....	.....	.....	1	1	.....	.....	2	42
1	.....	1	.....	.....	.....	1	.....	7	6	8	5	26	43
.....	.....	.....	.....	.....	.....	.....	.....	.....	1	.....	.....	1	44
1	1	.....	.....	.....	.....	.....	.....	7	2	.....	2	11	45
.....	.....	.....	.....	.....	.....	.....	.....	3	2	5	4	14	46
.....	.....	.....	.....	.....	.....	.....	.....	.....	.....	.....	.....	.....	47
2	1	1	1	2	.....	3	1	130	110	108	139	487	

TABLE 29.—*Showing the number examined for the classified customs service, the number that passed and that failed, the average age and education, during the year ended June 30, 1889.*

CLERK.

[All male except two, viz, two female eligibles at Boston.]

District.	Passed.							Failed.							Total.
	Number.	Average age.	Education.					Number.	Average age.	Education.					
			Common school.	Academic.	Business college.	High school.	Collegiate.			Common school.	Academic.	Business college.	High school.	Collegiate.	
Baltimore	41	31.9+	7	6	2	8	18	21	29.0—	7	2	5	1	6	62
Boston	47	31.5+	15	7	3	15	7	14	33.0	8	1	1	2	2	61
Chicago	19	30.3—	11	....	1	4	3	12	28.3+	8	1	1	1	1	31
Detroit	11	32.7+	....	1	5	2	3	10	28.4	2	1	6	1	....	21
New Orleans	14	31.3—	9	3	....	1	1	22	32.2—	8	3	2	1	8	36
New York	125	28.4—	66	20	8	13	18	234	29.0—	171	20	12	22	9	359
Philadelphia	13	28.6+	8	2	....	....	3	16	31.4+	6	3	4	1	2	29
Port Huron	1	35.0	....	....	....	1	....	....	....	....	....	....	....	....	1
Portland	8	32.2+	3	4	1	...	...	10	34.0—	3	6	1	....	....	18
San Francisco	25	29.7+	4	5	1	8	7	23	29.3—	6	4	5	4	4	48
Total	304	30.1+	123	48	21	52	60	362	29.5—	219	41	37	33	32	666

DAY INSPECTOR.

Baltimore	22	34.4+	9	2	2	4	5	31	37.4+	18	6	....	4	3	53
Boston	49	34.2+	20	3	7	17	2	21	38.0—	12	4	....	3	2	76
Burlington	24	34.0—	4	7	4	6	3	15	35.6+	4	6	2	2	1	39
Chicago	37	34.4—	24	4	1	1	7	17	34.0	15	....	1	1	....	54
Detroit	6	37.6+	6	....	....	....	....	7	34.2+	7	....	....	....	....	13
New Orleans	10	34.3	6	1	....	1	2	10	33.0	5	3	1	....	1	20
New York	231	30.9+	165	30	4	19	13	144	34.6—	125	7	3	5	4	375
Philadelphia	45	35.6+	36	4	1	3	1	64	33.5—	48	8	4	2	2	109
Port Huron	5	34.2	2	....	1	....	2	5	27.8	2	....	2	....	1	10
Portland	17	38.0—	12	3	2	...	....	17	41.6+	15	2	....	....	....	34
San Francisco	38	30.0—	13	5	6	8	6	36	31.8+	24	4	3	5	....	74
Total	484	32.5+	297	59	28	59	41	367	34.7+	275	40	16	22	14	851

WEIGHER, GAUGER, AND ASSISTANT WEIGHER.

Baltimore	14	35.5+	7	1	2	3	1	10	35.5	7	1	1	....	1	24
Boston	27	35.1+	17	2	2	5	1	5	37.4	4	....	....	1	....	32
Chicago	1	22.0	1	....	....	....	....	3	37.6+	3	....	....	....	....	4
New Orleans	10	27.6	4	1	....	2	3	2	42.5	2	....	....	....	....	12
New York	57	33.2—	46	4	1	4	2	10	35.0	10	....	....	....	....	67
Philadelphia	15	35.1+	12	1	....	1	1	15	35.8	12	1	1	1	....	30
Portland	7	39.7+	....	5	....	....	2	6	37.3+	3	2	1	....	....	13
San Francisco	26	30.8+	12	3	3	6	2	17	30.9—	8	2	4	3	....	43
Total	157	33.4—	99	17	8	21	12	68	34.9+	49	6	7	5	1	225

There are included in the column of "clerks passed," Baltimore, four examinations for the position of engineer.

There is included in the column of "clerks passed," Boston, one examination for transfer from the position of assistant weigher, appraiser's office, to the position of clerk, naval office.

There are included in the column of "clerks passed," New York, two examinations for the position of stenographer and three examinations for the position of teller; and in the column of "clerks failed," New York, one examination for the position of stenographer.

There is included in the column of "day inspectors passed," San Francisco, one examination for the position of foreman of laborers.

TABLE 29.—*Showing the number examined for the classified customs service, etc.*—Cont'd

EXAMINER.

District.	Passed.							Failed.							Total.
	Number.	Average age.	Education.					Number.	Average age.	Education.					
			Common school.	Academic.	Business college.	High school.	Collegiate.			Common school.	Academic.	Business college.	High school.	Collegiate.	
Baltimore	....	....	....	....	....	....	....	1	28.0	....	....	....	....	1	1
Boston	2	33.0	....	....	....	....	2	9	40.6+	3	1	1	3	1	11
New York	10	36.8	3	4	1	1	1	24	42.7+	13	6	1	2	2	34
Philadelphia	4	42.2+	4	....	....	....	....	9	35.5+	6	2	1	....	....	13
San Francisco	1	42.0	....	....	1	....	....	....	....	....	....	....	....	....	1
Total	17	38.0—	7	4	2	1	3	43	40.4+	22	9	3	5	4	60

NIGHT INSPECTOR AND WATCHMAN.

Baltimore	43	32.0—	28	3	4	4	4	29	34.0—	25	2	....	1	1	72
Boston	115	34.0—	83	4	6	16	6	48	39.6+	46	2	....	....	....	163
New York	134	34.0—	119	13	....	....	2	43	36.3—	38	4	....	1	....	177
San Francisco	15	30.0—	10	....	....	4	1	18	27.0+	15	....	....	2	1	33
Total	307	33.3—	240	20	10	24	13	138	35.7+	124	8	....	4	2	445

OPENER AND PACKER.

Chicago	1	46.0	1	....	....	....	....	2	28.0	2	....	....	....	....	3
New York	46	34.0	39	4	1	1	1	37	38.6+	36	1	....	....	....	83
Philadelphia	2	37.0	1	....	....	....	1	1	35.0	1	....	....	....	....	3
Total	49	34.4—	41	4	1	1	2	40	38.1	39	1	....	....	....	89

INSPECTRESS.

New York	53	28.6—	37	12	....	4	....	22	34.0—	19	2	....	1	....	75

SUGAR SAMPLER.

Boston	5	39.4	3	....	1	1	....	1	34.0	1	....	....	....	....	6
Philadelphia	3	28.0	3	....	....	....	....	3	31.0	3	....	....	....	....	6
San Francisco	....	....	....	....	....	....	....	2	27.5	1	....	....	1	....	2
Total	8	36.0—	6	....	1	1	....	6	30.3+	5	....	....	1	....	14

SUPPLEMENTARY TO TABLE 29.—*Showing the number of persons examined for promotion in the New York custom-house, the grade for which examinations were held, the number that passed and that failed, during the year ended June* 30, 1889.

Grades.	Collector's office.		Appraiser's office.		Surveyor's office.		Naval office.		Total.		Aggregate.
	Passed.	Failed.	Passed.	Failed.	Passed.	Failed.	Passed.	Failed.	Passed.	Failed.	
Class A to class 1, clerk grade	97	79	.....	.....	.....	.....	9	3	106	82	188
Class 1 to class 2, clerk grade	49	40	15	4	2	2	.....	.....	66	46	112
Class 2 to class 3, clerk grade	34	49	3	4	.....	.....	17	4	54	57	111
Class 3 to class 4, clerk grade	26	7	.....	.....	.....	.....	10	5	36	12	48
Openers, packers, and samplers to class 1, clerk grade	.....	.....	4	12	.....	.....	.....	.....	4	12	16
Total	206	175	22	20	2	2	36	12	266	209	475

RECAPITULATION OF ALL EXAMINATIONS FOR CUSTOMS SERVICE.

District.	Clerk.		Day inspector.		Weigher, gauger, and assistant weigher.		Examiner.		Night inspector and watchman.	
	Passed.	Failed.	Passed.	Failed.	Passed.	Failed.	Passed.	Failed.	Passed.	Failed.
Baltimore	41	21	22	31	14	10	.....	1	43	29
Boston	47	14	49	21	27	5	2	9	115	48
Burlington	.....	.....	24	15	.....	.....	.....	.....	.....	.....
Chicago	19	12	37	17	1	3	.....	.....	.....	.....
Detroit	11	10	6	7	.....	.....	.....	.....	.....	.....
New Orleans	14	22	10	10	10	2	.....	.....	.....	.....
New York	125	234	231	144	57	10	10	24	134	43
Philadelphia	13	16	45	61	15	15	4	9	.....	.....
Port Huron	1	.....	5	5	.....	.....	.....	.....	.....	.....
Portland	8	10	17	17	7	6	.....	.....	.....	.....
San Francisco	25	23	38	36	26	17	1	.....	15	18
Total	304	362	484	367	157	68	17	43	307	138

District.	Opener and packer.		Inspectress.		Sugar sampler.		Total.		Aggregate.	Per cent. passed.
	Passed.	Failed.	Passed.	Failed.	Passed.	Failed.	Passed.	Failed.		
Baltimore	.....	.....	.....	.....	.....	.....	120	92	212	57—
Boston	.....	.....	.....	.....	5	1	245	98	343	71+
Burlington	.....	.....	.....	.....	.....	.....	24	15	39	61+
Chicago	1	2	.....	.....	.....	.....	58	34	92	63+
Detroit	.....	.....	.....	.....	.....	.....	17	17	34	50
New Orleans	.....	.....	.....	.....	.....	.....	34	34	68	50
New York	46	37	53	22	.....	.....	656	514	1,170	56+
Philadelphia	2	1	.....	.....	3	3	82	108	190	43+
Port Huron	.....	.....	.....	.....	.....	.....	6	5	11	54+
Portland	.....	.....	.....	.....	.....	.....	32	33	65	50—
San Francisco	.....	.....	.....	.....	.....	2	105	96	201	52+
Total	49	40	53	22	8	6	1,379	1,046	2,425	57—

TABLE 30.—*Showing the number examined for the classified postal service, the number that passed and that failed, the average age, and education, during the year ended June 30, 1889.*

CLERK.

Location of post-office.	Passed.									Failed.									Total.
	Male.	Female.	Total.	Average age.	Education.*					Male.	Female.	Total.	Average age.	Education.*					
					C. S.	A.	B. C.	H. S.	Coll.					C. S.	A.	B. C.	H. S.	Coll.	
Albany	12	...	12	31.1+	8	1	1	7	...	6	...	6	27.1+	4	1	1	...	...	18
Atlanta	2	...	2	21.5	1	...	...	...	1	4	...	4	25.2+	3	...	...	...	1	6
Baltimore	38	...	38	26.2+	27	2	1	..	8	6	...	6	25.3+	4	2	...	...	...	44
Boston	238	50	288	21.4+	188	9	19	70	2	91	20	111	22.2—	103	...	3	5	..	399
Brooklyn	38	...	38	23.5—	36	...	...	2	...	34	...	34	23.4+	30	1	1	1	1	72
Buffalo	45	...	45	25.7—	15	5	7	15	3	25	...	25	29.0+	17	1	1	6	..	70
Chicago	115	86	201	26.6+	99	19	17	56	10	49	19	68	25.3+	52	7	3	3	3	269
Cincinnati	26	14	40	25.2+	20	...	4	6	10	14	6	20	25.0+	12	1	1	3	3	60
Cleveland	19	...	19	25.0	5	...	7	3	4	6	...	6	29.5	5	...	1	...	...	25
Columbus	10	...	10	25 4	10	...	...	...	...	...	...	...	...	...	...	...	...	...	10
Denver	21	8	29	25.7—	6	3	3	9	8	8	1	9	32.5+	5	1	2	1	...	38
Des Moines	8	8	16	29.4—	5	3	2	5	1	2	1	3	36.3+	2	...	1	...	...	19
Detroit	18	7	25	26.8+	9	3	1	9	3	6	1	7	21.7+	4	...	2	1	...	32
Hartford	2	3	5	22.8	5	...	...	...	...	2	1	3	27.3+	3	...	...	...	...	8
Indianapolis	37	...	37	26.5+	25	...	2	8	2	6	...	6	23.3+	4	...	1	1	..	43
Jersey City	2	...	2	19.5	1	...	1	...	...	...	...	...	...	...	...	...	...	...	2
Kansas City	30	...	30	29.4+	19	5	1	5	...	10	...	10	28.1	7	...	...	2	1	40
Los Angeles	22	16	38	25.1+	12	3	3	13	7	3	...	3	34.0	2	...	1	...	...	41
Louisville	18	16	34	26.0—	16	4	...	13	1	...	2	2	30.5+	1	1	...	...	...	36
Milwaukee	18	4	22	25.1+	16	...	4	1	1	4	1	5	20.4	4	...	1	...	...	27
Minneapolis	40	4	44	24.8—	13	2	8	16	5	13	..	13	25.0	7	2	2	1	1	57
Nashville	3	1	4	23.2+	1	...	1	1	1	2	2	4	23.7+	...	...	1	...	3	8
Newark	9	1	10	22.7	5	...	1	...	4	..	1	1	34.0	..	...	...	...	1	11
New Haven	12	2	14	21.5+	12	...	1	1	...	...	...	...	...	...	...	...	...	...	14
New Orleans	21	3	24	23.4+	12	1	1	3	7	2	1	3	27.3+	1	1	...	...	1	27
New York	283	...	283	22.0—	205	15	16	14	33	125	...	125	22.7—	110	3	2	8	2	408
Oakland	7	2	9	25.0	4	2	...	3	..	2	...	2	19.0	2	...	...	...	...	11
Omaha	9	4	13	27.8+	5	1	1	3	3	4	3	7	27.5+	3	2	...	2	...	20
Philadelphia	151	17	168	28.6+	168	...	...	...	...	72	3	75	30.8+	75	...	...	...	...	243
Pittsburgh	22	7	29	24.2+	14	...	4	7	4	9	2	11	27.5+	6	1	2	2	...	40
Portland	10	5	15	21.8+	6	3	6	...	...	6	2	8	29.5	6	...	2	...	...	23
Providence	9	1	10	25.8	5	1	2	2	...	7	2	9	29.0	6	2	1	...	...	19
Richmond	6	1	7	27.1+	2	...	...	2	3	1	...	1	22.0	1	...	...	...	...	8
Rochester	8	...	8	29.6+	3	3	...	2	...	6	...	6	27.0	5	1	...	...	...	14
St. Louis	31	8	39	23.4—	13	3	4	15	4	24	1	25	28.0	14	...	2	5	4	64
St. Paul	13	12	25	25.0	14	5	...	6	...	9	1	10	22.6	6	...	...	3	1	35
San Francisco	34	33	67	23.2+	50	7	...	...	10	1	1	2	33.5	1	1	...	...	...	69
Syracuse	14	...	14	28.0+	8	4	2	...	...	8	...	12	33.3+	7	5	...	...	...	26
Toledo	7	4	11	21.3+	1	...	3	5	2	5	1	6	22.8+	3	1	2	...	...	17
Troy	16	...	16	29.2+	8	2	3	3	...	8	...	8	30.2+	6	1	...	...	1	24
Washington	74	9	83	23.0—	31	5	2	35	10	16	...	16	27.2+	11	1	...	1	3	99
Worcester	19	1	20	22.2	10	...	1	7	2	3	..	3	24.3+	3	...	...	...	...	23
Total	1,517	327	1,844	24.0—	1,108	111	129	347	149	603	72	675	26.0—	535	36	33	45	26	2,519

*C. S. indicates common school; A., academic; B. C., business college; H. S., high school; Coll., collegiate.

TABLE 30.—*Showing the number examined for the classified postal service, etc.*—Cont'd.

CARRIER.

Location of post-office.	Passed.							Failed.							Total.
	Number.	Average age.	Education.					Number.	Average age.	Education.					
			C. S.	A.	B. C.	H. S.	Coll.			C. S.	A.	B. C.	H. S.	Coll.	
Albany	26	26.0—	20	1	5	....	....	33	27.5+	25	4	4	....	....	59
Atlanta	5	24.6	1	....	....	1	3	5	29.6	3	....	....	1	1	10
Baltimore	75	28.0—	73	1	....	....	1	5	23.6	5	....	....	....	....	80
Boston	477	26.1—	380	1	22	69	5	427	26.7+	387	4	7	27	2	904
Brooklyn	397	25.5+	382	4	7	3	1	290	25.8+	285	2	3	....	....	687
Buffalo	147	26.8—	107	7	16	17	....	70	29.3+	48	2	5	15	....	217
Chicago	200	27.4+	147	10	17	19	7	206	28.7+	178	6	9	15	5	406
Cincinnati	87	27.2+	77	....	1	4	5	18	29.3+	17	....	....	1	....	105
Cleveland	81	27.0+	58	2	9	7	5	34	30.5+	29	....	3	1	1	115
Columbus	37	29.5+	36	1	....	....	....	19	30.2+	19	....	....	....	....	56
Denver	34	28.2—	23	1	2	2	6	15	28.0+	12	....	....	2	1	49
Des Moines	24	28.3—	18	1	1	2	2	9	27.2+	8	....	....	1	....	33
Detroit	38	27.4—	30	2	....	3	3	46	28.2+	35	2	4	2	3	81
Hartford	8	25.4+	5	1	2	....	....	5	27.2	3	1	1	....	....	13
Indianapolis	44	26.0+	30	....	3	7	4	19	31.1+	17	1	....	1	....	63
Jersey City	25	24.3—	21	1	2	1	....	27	26.6—	21	3	1	2	....	52
Kansas City	37	27.0—	27	2	2	5	1	15	27.3+	12	1	....	....	2	52
Los Angeles	21	26.0—	9	3	1	4	4	18	31.0+	15	....	1	1	1	39
Louisville	18	26.0—	15	1	....	1	1	7	30.7+	6	....	....	1	....	25
Milwaukee	46	28.2+	39	....	6	1	....	87	28.0+	83	1	2	1	....	133
Minneapolis	72	27.0—	41	8	5	13	5	98	28.3+	74	....	10	9	5	170
Nashville	10	29.1	5	....	1	3	1	9	30.0—	6	....	1	....	2	19
Newark	22	27.1—	16	....	3	....	3	14	29.1+	13	....	....	....	1	36
New Haven	23	27.6+	21	1	1	2	....	5	35.0	5	....	....	....	....	30
New Orleans	45	28.5—	29	5	....	2	9	19	27.4+	13	3	1	....	2	64
New York	961	26.6—	890	23	8	24	16	817	25.7—	774	14	6	14	9	1,778
Oakland	10	25.7	6	....	1	3	....	4	27.0	2	1	....	1	....	14
Omaha	27	29.3—	18	2	2	2	3	27	27.5	26	....	....	....	1	54
Philadelphia	327	27.7+	327	....	....	....	....	344	29.0—	344	....	....	....	....	671
Pittsburgh	58	26.8+	43	2	6	5	2	26	28.3+	21	1	2	2	....	84
Portland	11	28.0+	10	....	1	....	....	10	28.6	10	....	....	....	....	21
Providence	33	28.0+	24	3	1	4	1	18	30.4+	13	....	4	1	....	51
Richmond	18	27.2—	15	....	....	3	....	16	30.3+	16	....	....	....	....	34
Rochester	45	27.3+	34	6	2	3	....	26	25.0—	24	2	....	....	....	71
St. Louis	165	26.6+	120	1	13	20	11	184	27.6+	159	....	10	10	5	349
St. Paul	58	26.5+	49	....	....	8	1	25	24.1+	23	....	....	1	1	83
San Francisco	103	25.8+	88	5	....	....	10	13	29.1—	12	1	....	....	....	116
Syracuse	24	25.0	19	3	2	..	....	29	29.7+	26	1	2	....	....	53
Toledo	14	29.0—	11	....	2	1	....	16	29.3+	14	....	2	....	....	30
Troy	73	28.8+	47	10	10	6	....	34	27.5+	33	....	1	....	....	107
Washington	66	26.1+	50	2	4	4	6	32	26.7+	25	2	....	....	5	98
Worcester	22	28.1+	18	....	1	3	....	10	29.3	9	....	....	1	....	32
Total	4,016	26.5+	3,379	110	159	252	116	3,133	27.3+	2,845	52	79	110	47	7,149

* C. S. indicates common school; A., academic; B. C., business college H. S., high schoo.; Coll., collegiate.

TABLE 30.—*Showing the number examined for the classified postal service, etc.*—Cont'd.

MESSENGER.

Location of post-office.	Passed.							Failed.							Total.
	Number.	Average age.	Education.					Number.	Average age.	Education.					
			C. S.	A.	B. C.	H. S.	Coll.			C. S.	A.	B. C.	H. S.	Coll.	
Albany	4	20.5	1	1	1	1	....	....	....	....	....	....	....	....	4
Baltimore	2	24.5	2	....	....	....	....	1	58.0	1	....	....	....	....	3
Boston	28	24.1+	26	1	....	1	....	30	25.8+	28	....	....	2	....	58
Brooklyn	15	17.8	14	1	....	....	....	6	17.3+	6	....	....	....	....	21
Buffalo	4	25.0	4	....	....	....	....	....	....	....	....	....	....	....	4
Chicago	182	19.1+	122	8	18	21	13	72	23.8—	65	3	2	....	2	254
Cincinnati	38	23.5+	37	....	....	1	....	30	28.4+	30	....	....	....	....	68
Columbus	1	18.0	1	....	....	....	....	....	....	....	....	....	....	....	1
Des Moines	2	17.6	2	....	....	....	....	....	....	....	....	....	....	....	2
Detroit	6	21.3+	2	1	2	1	....	2	28.0	2	....	....	....	....	8
Hartford	....	....	....	....	....	....	....	1	44.0	1	....	....	....	....	1
Milwaukee	12	17.0	11	....	....	1	....	3	25.6+	3	....	....	....	....	15
Minneapolis	2	17.5	2	....	....	....	....	....	....	....	....	....	....	....	2
Nashville	....	....	....	....	....	....	....	2	18.0	1	....	....	1	....	2
Newark	2	24.0	2	....	....	....	....	....	....	....	....	....	....	....	2
New Haven	7	16.7+	5	....	....	2	....	....	....	....	....	....	....	....	7
New Orleans	43	22.4—	24	8	3	3	5	2	26.0	2	....	....	....	....	45
New York	323	28.1+	295	7	....	13	8	113	24.4+	110	1	....	2	....	436
Omaha	1	44.0	1	....	....	....	....	....	....	....	....	....	....	....	1
Pittsburgh	14	17.0—	3	....	4	4	3	3	16.3+	2	....	1	....	....	17
St. Louis	56	20.0+	38	..	7	5	6	11	22.5+	10	....	....	1	....	67
St. Paul	5	16.6	5	....	....	....	....	1	25.0	1	....	....	....	....	6
San Francisco	1	19.0	1	....	....	....	....	....	....	....	....	....	....	....	1
Syracuse	2	21.0	2	....	....	....	....	1	25.0	1	....	....	....	....	3
Toledo	1	17.0	1	....	....	....	....	....	....	....	....	....	....	....	1
Troy	3	18.0	2	1	....	....	....	1	22.0	1	....	....	....	....	4
Worcester	1	17.0	1	....	....	....	....	....	....	....	....	....	....	....	1
Total	755	20.0—	604	28	35	53	35	279	25.0—	264	4	3	6	2	1,034

*C. S. indicates common school; A., academic: B. C., business college; H. S., high school; Coll., collegiate.

TABLE 30.—*Showing the number examined for the classified postal service, etc.*—Cont'd.

SUMMARY.

Location of post-office.	Passed.	Failed.	Aggregate.	Location of post-office.	Passed	Failed.	Aggregate.
Albany	42	39	81	Newark	34	15	49
Atlanta	7	9	16	New Haven	46	5	51
Baltimore	115	12	127	New Orleans	112	24	136
Boston	793	568	1,361	New York	1,567	1,055	2,622
Brooklyn	450	330	780	Oakland	19	6	25
Buffalo	196	95	291	Omaha	41	34	75
Chicago	583	348	931	Philadelphia	495	419	914
Cincinnati	165	68	233	Pittsburgh	101	40	141
Cleveland	100	40	140	Portland	26	18	44
Columbus	48	19	67	Providence	43	27	70
Denver	68	24	87	Richmond	25	17	42
Des Moines	42	12	54	Rochester	53	32	85
Detroit	69	55	124	St. Louis	260	220	480
Hartford	13	9	22	St. Paul	88	36	124
Indianapolis	81	25	103	San Francisco	171	15	186
Jersey City	27	27	54	Syracuse	40	42	82
Kansas City	67	25	92	Toledo	26	22	48
Los Angeles	59	21	80	Troy	92	43	135
Louisville	52	9	61	Washington	149	48	197
Milwaukee	80	95	175	Worcester	43	13	56
Minneapolis	118	111	229				
Nashville	14	15	29	Total	6,615	4,087	10,702

Kind of examination	Examined.	Education.												Per cent. passed.	Average age.	
		Passed.						Failed.								
		Common school.	Academic.	Business college.	High school.	Collegiate.	Total.	Common school.	Academic.	Business college.	High school.	Collegiate.	Total.		Passed.	Failed.
Departmental service:																
Copyist	1286	222	141	57	325	142	887	145	63	26	100	65	399	69—	28—	33—
Clerk	1068	120	93	52	223	255	743	79	50	37	74	85	325	70—	30+	33—
Principal pension examiner	5	1	.....	.....	.....	3	4	1	.....	.....	.....	.....	1	80	42+	44
Medical pension examiner	38	1	2	.....	1	6	10	1	.....	.....	.....	27	28	29—	27+	43—
Special pension examiner	434	11	7	1	11	35	65	153	42	21	63	91	369	15+	36—	45+
Clerk State Department	6	.....	.....	.....	2	2	4	.....	1	.....	.....	1	2	66+	32+	63
Assistant examiner, Patent Office	50	.....	2	.....	1	19	22	4	1	.....	6	17	28	44	25+	27—
Post-office inspector	178	17	22	10	26	27	102	31	12	6	12	15	76	57	36—	44—
Book-keeper	102	3	1	7	6	7	24	16	8	18	24	12	78	24—	31+	33
Computer	34	.....	1	.....	.....	13	14	.....	8	.....	1	16	20	41+	26+	25—
Assistant astronomer	6	.....	.....	.....	.....	4	4	.....	.....	.....	.....	2	2	66+	31	27+
Expert for the Navy Department	10	.....	.....	.....	.....	10	10	.....	.....	.....	.....	.....	.....	100	26—	.....
Civil engineer	19	.....	.....	.....	.....	3	3	.....	4	.....	4	8	16	16—	33—	34—
Topographical draftsman	16	1	.....	.....	3	5	9	.....	4	.....	2	1	7	56+	27+	34+
Mechanical draftsman	5	.....	.....	.....	.....	1	1	.....	1	1	2	.....	4	20	30	23+
Architectural draftsman	27	3	2	.....	6	2	13	6	.....	1	1	6	14	48+	25	25+
Copyist of mechanical drawings and tracer	16	2	.....	.....	3	2	7	3	3	2	.....	1	9	44—	26—	34—
Paleontological delineator	6	.....	.....	.....	.....	.....	.....	1	2	.....	.....	3	6	.....	.....	35
Sanitary heating and ventilating expert, and metal constructor	10	.....	.....	.....	.....	2	2	3	.....	.....	2	3	8	20	30+	32—
Law clerk—special	20	2	.....	.....	3	11	16	1	1	.....	1	1	4	80	30+	35+
Proof-reader—special	8	2	.....	.....	.....	.....	2	2	3	.....	.....	1	6	25	45	39+
Craniological expert	1	.....	.....	.....	.....	1	1	.....	.....	.....	.....	.....	.....	100	21	.....
Expert in Agricultural Department	27	1	1	.....	3	11	16	1	1	.....	.....	9	11	60—	31+	31+
Printer's assistant	149	64	20	.....	23	4	111	31	4	.....	2	1	38	75—	21+	23—
Skilled helper	37	21	.....	1	3	4	29	6	1	.....	1	.....	8	80—	30+	37—
General Rule III, paragraph 2 (*b*)	11	1	1	.....	1	5	8	.....	.....	.....	1	2	3	72+	45+	47+
General Rule III, paragraph 2 (*c*)	65	21	5	.....	5	10	41	15	4	.....	.....	5	24	62+	31—	41—

TABLE 31.—*Showing, for all grades of competitors, in all branches of the classified civil service, the number examined, etc.*—Continued.

Kind of examination.	Examined.	Education.												Per cent. passed.	Average age.	
		Passed.						Failed.								
		Common school.	Academic.	Business college.	High school.	Collegiate.	Total.	Common school.	Academic.	Business college.	High school.	Collegiate.	Total.		Passed.	Failed.
Departmental service—Continued.																
General Rule III, paragraph 2 (*c*)	54	14	5	.....	7	5	31	15	5	.....	1	2	23	57+	32—	42+
Special Departmental Rule II	9	2	1	.....	.....	.....	3	6	.....	.....	.....	.....	6	33+	36	42+
Totals and general averages of departmental service	3,697	509	304	128	652	589	2,182	520	213	112	296	374	1,515	59+	29+	36+
Transfers (Rule VIII). Promotions (Rule IX)	70															
	3,767															
Railway mail service:																
Railway mail clerk	2,236	565	224	165	541	307	1,802	207	44	32	96	55	434	81—	26—	27+
Transfers (Rule V)	2															
	2,238															
Customs service:																
Clerk	666	123	48	21	52	60	304	219	41	37	33	32	362	46—	30+	30—
Day inspector	851	207	59	28	59	41	434	275	40	16	22	14	367	57—	33—	35—
Weigher, ganger, and assistant weigher	225	99	17	8	21	12	157	49	6	7	5	1	68	70—	33+	35—
Examiner	60	7	4	2	1	3	17	22	9	3	5	4	43	28+	38	40+
Night inspector and watchman	445	240	20	10	24	13	307	124	8	.....	4	2	138	69—	33+	36—
Opener and packer	89	41	4	1	1	2	49	39	1	.....	.....	.....	40	55+	34+	38+
Inspectress	75	37	12	.....	4	.....	53	19	2	.....	1	.....	22	71—	29—	34
Sugar sampler	14	6	.....	1	1	.....	8	5	.....	.....	1	.....	6	57+	36—	30+
Totals and general averages of customs service	2,425	850	164	71	163	131	1,379	752	107	63	71	53	1,046	57—	32+	33+
Postal service:																
Clerk	2,519	1,108	111	129	347	149	1,844	535	36	33	45	26	675	73+	24—	26—
Carrier	7,149	3,379	110	159	252	116	4,016	2,845	52	79	110	47	3,133	56+	27—	27+

Messenger	1,034	604	28	35	53	35	755	261	4	3	6	2	279	73+	20—	25—
Totals and general averages of postal service	10,792	5,091	249	323	652	300	6,615	3,644	92	115	161	75	4,087	62—	25+	27—
Grand totals and general averages of all branches of the service	19,060	7,015	941	687	2,008	1,327	11,978	5,123	456	322	624	587	7,062	63—	27—	30—
Transfers and promotions	72															
	19,132															

The United States Military and Naval Academies, all universities, theologic naries, and law and medical schools, are reported as colleges in the tables of thi normal schools, military and other boarding-schools, agricultural colleges, a naries, are reported as academies, and private day schools, parish schools, reported as common schools. The data furnished in these tables are, howeve tle value in determining the educational qualifications of the competitors, as easily ascertained by a merely cursory analysis of the different tables in the and former reports of the commission. It is hardly credible that so many g of colleges and kindred institutions of learning would be found competing for p of the lowest grades in the different branches of the service, as the tables seem Not only the positions sought, but the ignorance displayed in the examinati even in the applications of many competitors, contradict their claim of edu advantages. The commission does not, however, require, and the applicant often attempt to give, the name, standing, or curriculum of the institutions i the education was received, or the time spent, or the proficiency acquired No evidence is required of degrees conferred, or of diplomas or certificates r The applicants generally appear to think that it will improve their chances ing an appointment to make a good showing of the opportunities they hav acquiring a superior education, and therefore name all the institutions of l or at least those of the higher grades, with which they have been connecte manner or for any length of time. The highest grade named is, of course, en the table, and thus the college, high school, and academy are credited with m had only a very short connection with those institutions, and, in fact, ough credited to the common school or business college.

While the number of alleged collegians who take low-grade examinations larger than would naturally be expected, it is, on the other hand, much smal it should be for many of the higher grade examinations, where a knowledg fessional or technical subjects—of the studies ordinarily pursued in colle schools, etc.—is essential. This is especially true of the competitors for the of special pension examiner, who can not well attain an eligible average w fair acquaintance with law, but of the 434 who competed during the year place, only 126 claim to have received a college (law school) education. Th and allowances of a special examiner ($1,400 per annum and a per diem of $ induced many persons, who, according to their own admissions, did not pos necessary educational qualifications to enter the competition. The result is s the column of "Per cent. passed," and the examining boards have been burden the marking of 434 sets of papers in order to secure 65 eligibles. The experi incompetent persons have not been so expensive to the Government in an other higher grade examinations, because the allurements have not been suf tempting to draw large numbers of competitors.

The general average age of those who passed—a little less than 27 years—above the average age of graduation, even from the higher grade educational tions, but it is much lower than it would be did not the rules fix the minim maximum age limits quite low for several large classes of candidates, viz:

Clerks in the postal service, for which position 1,844 passed, the minimum 18 years.

Carriers in the postal service, for which 4,016 passed, the maximum limit is

Messengers in the postal service, for which 755 passed, the minimum li years and the maximum 45 years.

Clerks in the Railway Mail Service, for which 1,802 passed, the minimum li years and the maximum 35 years.

Printers' assistants in the Bureau of Engraving and Printing, for which 11 the minimum limit is 18 years and the maximum 35 years.

This makes a total of 8,528 persons—more than two-thirds of all who passed age limits were, in view of the duties to be performed, restricted to ages mor approximating the school age. For all other positions than those named abo is no maximum limit, and the minimum limit is 20 or 21 years.

LE 32—*Showing appointments in the departmental service and their apportionment the States, Territories, and the District of Columbia, during the year ended June* 30, 89, *and during the period from July* 16, 1883, *to June* 30, 1889.

State.	Appointments made during year ended June 30, 1889.			Appointments made from July 16, 1883, to June 30, 1889.			Share of 1,768 appointments that each State would be entitled to in an exact apportionment.
	General apportionment.	Female copyist apportionment.	Total.	From competitive examinations.	From non-competitive examinations.	Total.	
Alabama	5	1	6	36	2	38	44
Arizona	1	.....	1	3	.....	3	1
Arkansas	3	1	4	26	.....	26	28
California	7	1	8	26	3	29	30
Colorado	3	1	4	10	2	12	7
Connecticut	5	1	6	22	2	24	22
Dakota	.....	.....	.....	5	.....	5	5
Delaware	.....	1	1	8	.....	8	5
District of Columbia	19	.....	19	39	19	58	6
Florida	3	1	3	13	1	14	10
Georgia	9	1	10	48	2	50	54
Idaho	1	.....	1	2	1	3	1
Illinois	14	.....	14	103	3	106	109
Indiana	5	.....	5	71	.....	71	70
Indian Territory	.....	.....	.....	1	.....	1	1
Iowa	8	.....	8	51	2	53	57
Kansas	7	1	8	33	.....	33	25
Kentucky	13	.....	13	53	3	56	58
Louisiana	4	1	5	27	1	28	33
Maine	4	.....	4	23	.....	22	23
Maryland	14	1	15	41	10	51	33
Massachusetts	9	.....	9	55	2	57	63
Michigan	11	1	12	52	2	54	58
Minnesota	3	1	4	26	.....	26	28
Mississippi	7	1	8	34	2	36	40
Missouri	9	.....	9	67	.....	67	76
Montana	.....	.....	.....	2	.....	2	1
Nebraska	3	1	4	15	.....	15	16
Nevada	.....	.....	.....	1	.....	1	2
New Hampshire	2	.....	2	14	.....	14	12
New Jersey	7	1	8	38	1	39	40
New Mexico	.....	.....	.....	4	.....	4	4
New York	34	.....	34	161	7	168	180
North Carolina	15	.....	15	45	4	49	49
Ohio	14	.....	14	102	4	106	113
Oregon	1	.....	1	5	1	6	6
Pennsylvania	29	.....	29	130	12	142	151
Rhode Island	2	1	3	10	.....	10	10
South Carolina	5	1	6	31	1	32	35
Tennessee	7	1	8	46	.....	46	54
Texas	8	.....	8	49	1	50	56
Utah	.....	.....	.....	1	.....	1	5
Vermont	3	1	4	14	.....	14	12
Virginia	6	1	7	59	4	63	53
Washington	.....	.....	.....	3	.....	3	3
West Virginia	6	1	7	24	3	27	22
Wisconsin	10	1	11	41	3	44	46
Wyoming	.....	.....	.....	1	.....	1	1
Total	315	23	338	1,670	98	1,768	1,768

ll appointments of males and all appointments whether of males or of females, ade upon certification from the clerk register, and from special and supplementary gisters, are charged to the general apportionment; and all appointments of females ade upon certification from the copyist register, are charged to the female copyist pportionment. The object of making a separate apportionment of female appointents made upon certification from the copyist register was to equalize these appointments among the States and Territories as nearly as possible, which object has been fully accomplished, as shown by this table.

The second section of the civil service act requires that the appointments in the Departments at Washington shall be apportioned among the several States and Territories and the District of Columbia upon the basis of population as ascertained at the last preceding census.

The whole number of appointments apportioned under this provision prior to June 30, 1889, was 1,945; of this number, 177 special pension examiners were apportioned by the Secretary of the Interior, under the provisions of Special Rules 3 and 4, between July 22, 1884, and July 14, 1886, since which last-mentioned date all appointments have been apportioned by the commission.

The number of appointments which each State and Territory would have received in an exact apportionment of the 1,768 appointments apportioned by the commission is shown in the seventh column of the above table. The sixth column shows the number actually received by each State and Territory.

What was said in the last report of the commission on the subject of apportionment is as appropriate to this report as to that, and is, therefore, repeated here:

"It has been found impossible to maintain this apportionment with mathematical exactness, but it has been equitably maintained with respect to most of the States. A few of the States and nearly all of the Territories have received relatively an excessive share of appointments as compared with the other States. This is notably the case with respect to Maryland, Virginia, and the District of Columbia, and has resulted from the necessity of examining and certifying for appointment to places requiring special or technical knowledge or skill such persons as offered themselves, after due public notice, without regard to their places of legal residence. Such persons have been found relatively in larger numbers in Maryland, Virginia, and the District of Columbia than elsewhere."

The number of appointments charged to the District of Columbia early became so largely in excess of the number to which it was entitled under the apportionments that for three years and more no persons having a legal residence in the District have been examined unless there was an entire failure of applicants from elsewhere. The facilities now afforded for convenient examination will, it is hoped, tend to prevent this excess in the future.

It will be seen that nineteen of the appointments, or about one-third of the whole number, received by the District of Columbia were from non competitive examinations, held under the provisions of General Rule III, section 2, clauses (*b*), (*c*), and (*e*) and Departmental Rule VIII.

In the case of non-competitive examinations, where the person to be examined is nominated by the appointing officer, no restriction has been placed upon the examination of persons from States which had received an excessive share of appointments.

The above table does not include forty-nine persons—all females—appointed to the grade of printer's assistant, Bureau of Engraving and Printing, for the reason that these appointments were not apportioned among the States and Territories. They were not apportioned for two reasons, viz:

(1) It was thought that the limited compensation paid these employés, coupled with the character of the work they are required to perform, would not attract persons from the remoter States and Territories. This alone would render such apportionment impracticable.

(2) It was deemed contrary to public policy to encourage women to leave the restraints of their homes, even though they be not remote, and come to this city where they would be exposed not only to the many temptations that beset the great majority of self-dependent women in cities, but to those temptations aggravated by circumstances attendant upon the effort to live comfortably and respectably upon an inadequate salary. For these reasons examinations for this grade have been held at Washington only, but open to all who possessed the requisite qualifications and who chose to apply.

TABLE 33.—*Showing appointments made from the several examinations to the classified departmental service during the year ended June* 30, 1889.

Kind of examination.	Male.	Fem.	Total.
COMPETITIVE EXAMINATIONS.			
Book-keeper, special	15	1	16
Chinese and Japanese, supplementary	1	.....	1
Clerk	65	.....	65
Copyist	31	23	54
French, supplementary	.....	4	4
French and German, supplementary	1	.....	1
French, German, Spanish, and Italian, supplementary	1	.....	1
German, supplementary	.....	1	1
Law, supplementary	2	.....	2
Mechanical draughting, special	1	.....	1
Proof-reader, supplementary	2	.....	2
Special law, special	1	.....	1
Stenography, supplementary	5	.....	5
Stenography and type-writing, supplementary	6	.....	6
Telegraphy and stenography, supplementary	1	.....	1
Topographical draughting, special	4	.....	4
Type-writer, supplementary	14	10	24
State Department:			
Clerk, special	2	.....	2
War Department:			
Architectural draughting, Quartermaster-General's Office, special	2	.....	2
Civil engineer, Quartermaster-General's Office, special	1	.....	1
Computer, Ordnance Office, special	1	.....	1
Craniology, Surgeon-General's Office, special	1	.....	1
Navy Department:			
Computer, Nautical Almanac Office, special	3	.....	3
Computer, Naval Observatory, special	1	.....	1
Expert in nautical science, Hydrographic Office, special	3	.....	3
Expert in naval science and affairs, War Records Office, special	1	.....	1
Treasury Department:			
Architectural draughting, Supervising Architect's Office, special	1	.....	1
Computer, Coast and Geodetic Survey, special	2	.....	2
Printer's assistant, Bureau of Engraving and Printing, special	.....	49	49
Tracer, Supervising Architect's Office, special	.....	1	1
Interior Department:			
Assistant examiner, Patent Office, special	13	.....	13
Medical pension examiner, Pension Office, special	2	.....	2
Principal pension examiner, Pension Office, special	2	.....	2
Proof-reader, Geological Survey, special	1	.....	1
Special pension examiner, Pension Office, special	10	.....	10
Tracer, Patent Office, special	.....	1	1
Post-Office Department:			
Post office inspector, special	6	.....	6
Agricultural Department:			
Assistant chemist, special	2	.....	2
Botany, special	2	1	3
Editor and clerk, experiment station, special	1	.....	1
Vegetable pathologist, special	1	.....	1
NON-COMPETITIVE EXAMINATIONS.			
Assistant disbursing clerk, General Rule III, section 2, clause *e*	1	.....	1
Assistant engineer, General Rule III, section 2, clause *e*	1	.....	1
Assistant photographer, General Rule III, section 2, clause *e*	1	.....	1
Clerk, Departmental Rule II, section 4	7	.....	7
Clerk, General Rule III, section 2, clause *e*	2	1	3
Clerk, State Department, Departmental Rule II, section 4	1	.....	1
Clerk, Special Departmental Rule II	.....	1	1
Copyist, General Rule III, section 2, clause *e*	19	20	39
Copyist, Departmental Rule II, section 4	1	1	2
Copyist, Special Departmental Rule II	1	3	4
Fireman, General Rule III, section 2, clause *e*	4	.....	4
Model attendant, Patent Office, Interior Department, General Rule III, section 2, clause *e*	2	3	5
Money counter, Treasurer's Office, Treasury Department, General Rule III, section 2, clause *e*	2	4	6
Nautical expert, hydrographic stations, special, General Rule III, section 2, clause *e*	3	.....	3
Post-office inspector, Departmental Rule VIII and Railway Mail Rule V	2	.....	2
Pressman, General Rule III, section 2, clause *e*	1	.....	1
Superintendent of Pension Building, General Rule III, section 2, clause *e*	1	.....	1
Returns office clerk, Interior Department, General Rule III, section 2, clause *e*	1	.....	1
Steam and electrical engineer, General Rule III, section 2, clause *e*	2	.....	2
Transfer, Departmental Rule VIII, section 1, clause *c*, and Postal Rule VI	3	.....	3
Total	263	124	387

TABLE 34.—*Showing appointments of military and naval preference claimants, under section 1754, Revised Statutes, during the year ended June 30, 1889.*

Legal residence.	Department.	Kind of examination.	Number.
Arizona	Interior	Copyist	1
Indiana	do	do	1
Iowa	Post-Office	do	1
Maine	do	Post-office inspector	1
Maryland	War	Clerk	1
Michigan	Labor	do	1
Minnesota	Interior	Copyist	1
New York	do	do	1
New York	War	do	1
Ohio	Civil Service Commission	do	1
Pennsylvania	Interior	do	1
Pennsylvania	War	Clerk	2
Virginia	do	do	1
Total			14

The number of persons of this class appointed during the year ended June 30, 1889, as shown by the above statement, is eight less than during the previous year; and it is quite certain that few, if any, of those appointed would have been entitled to certification or appointment by reason of their grade, had not the civil service rules given them preference in certification in accordance with the provision of the statute.

TABLE 35.—*Showing the number of separations from the classified departmental service by removal, resignation, and death, and the number of re-instatements, for the year ended June 30, 1889.*

Department.	Removals.			Resignations.			Deaths.			Totals.			Re-instatements.		
	Male.	Female.	Total.	Male.	Female.	Total.	Male.	Female.	Total.	Male.	Female.	Total.	Male.	Female.	Total.
State	....	....	....	....	....	....	....	....	....	....	....	....	....	....	....
War	3	....	3	35	1	36	1	....	1	39	1	40	5	....	5
Treasury	3	....	3	19	4	23	0	1	1	22	5	27	3	....	3
Justice	....	....	....	....	....	....	....	....	....	....	....	....	....	....	....
Post-Office	1	....	1	11	1	12	....	....	....	12	1	13	1	1	2
Navy	....	....	....	....	....	....	....	....	....	....	....	....	....	....	....
Interior	*85	1	86	†22	5	27	10	....	10	117	6	123	8	1	9
Agriculture	..	....	....	1	....	1	....	....	....	1	....	1	....	....	....
Civil Service Commission	..	..	....	1	....	1	..	....	....	1	..	1	....	....	..
Total	92	1	93	89	11	‡100	11	1	12	192	13	205	17	2	19

*Of this number seventy were special examiners in the Pension Office, thirty-one of whom were dropped at the expiration of the term for which they were appointed.

†Of this number eight were special examiners in the Pension Office.

‡Twenty-eight of these resignations were for the purpose of accepting appointments in other departments.

TABLE 36.—*Showing, by States, the names of those appointed in the classified departmental service, charged to the general apportionment, during the year ended June 30, 1889, together with the changes in the status or grade of such persons occurring during that period.*

Name.	Probationary appointment.			Absolute appointment.	Promoted.		Separated from service.	Examination taken.
	Department.	Salary.	Date.		To—	Date.		
ALABAMA.								
Hamner, Charles W	War	$1,000	July 24, 1888	Jan. 24, 1889	$1,200	Nov. 10, 1888		Clerk.
O'Connor, Charles E	Interior	900	Oct. 11, 1888					Non-competitive, copyist, general rule 3, clause 2 (*c*).
Fellows, Harry Andrew	War	1,000	Oct. 24, 1888	Apr. 24, 1889				Clerk.
Lindsay, Miss Ida B	Treasury	900	Feb. 21, 1889					Non-competitive, copyist, general rule 3, clause 2 (*c*).
Dawson, Annie B	Interior	720	June 17, 1889					Type-writer.
ARIZONA.								
Sues, Otto Louis*	Interior	900	Dec. 20, 1888	June 20, 1889				Copyist.
ARKANSAS.								
Starck, Arle W	Labor	1,200	July 14, 1888	Jan. 14, 1889				Clerk.
Williamson, Edwin	War	1,000	Dec. 11, 1888	June 11, 1889	1,200	May 14, 1889		Do.
Edwards, William Walton	... do	1,000	Apr. 6, 1889					Do.
CALIFORNIA.								
Thompson, Hugh S	War	1,000	July 19, 1888	Jan. 19, 1889	1,200	Nov. 10, 1888		Clerk.
Murphy, Daniel C	....do	1,000	Oct. 16, 1888	Apr. 16, 1889				Stenography.
McMillan, John T		†83	Oct. 17, 1888	May 1, 1889				Nautical expert, non-competitive, general rule 3, section 2, clause (*e*).
Blumenberg, Miss Magda M	Post-Office	900	Nov. 15, 1888	May 20, 1889				Type-writing.
Campbell, James H	Treasury	900	Nov. 19, 1888	May 18, 1889				Non-competitive, money counter, general rule 3, clause 2 (*c*).
O'Donoghue, Michael F	Navy	1,200	Feb. 4, 1889					Law.
Bone, Jennie C	Treasury	720	Feb. 26, 1889					Non-competitive, money counter, general rule 3, clause 2 (*c*).
COLORADO.								
Reigart, Mrs. Frances A	Interior	900	Sept. 1, 1888					Non-competitive, copyist, general rule 3, clause 2 (*c*).
Junken, Charles A	War	1,000	Mar. 18, 1889					Computer, Ordnance Office.
McRae, Annie	Treasury	900	Apr. 17, 1889					Non-competitive, copyist, general rule 3, clause 2 (*c*).

*Preference, section 1754, Revised Statutes. †Per month.

TABLE 36.—*Showing, by States, the names of those appointed in the classified departmental service, charged to the general apportionment, etc.*—Cont'd.

Name.	Probationary appointment.			Absolute appointment.	Promoted.		Separated from service.	Examination taken.
	Department.	Salary.	Date.		To—	Date.		
CONNECTICUT.								
Preston, George O	Post-Office	$900	Aug. 1, 1888					Transfer, departmental rule 8, clause 1 (c), and postal rule 6.
Brownell, Henry B	Interior	1,200	Aug. 22 1888	Feb. 22, 1889				Assistant examiner, Patent Office.
Keegan, Miss Kate E	Treasury	900	Aug. 30, 1888	Mar. 7, 1889				Non-competitive, money counter, general rule 3, clause 2 (e).
Smith, Orlando C	Interior	1,400	Dec. 21, 1888	June 21, 1889				Special pension examiner.
True, Alfred C	Agricultural	1,800	Mar. 2, 1889					Special editor.
DISTRICT OF COLUMBIA.								
Dunn, Charles A	Navy	900	Aug. 24, 1888					Non-competitive, copyist, general rule 3, clause 2 (c).
Reid, Norman A	Post-Office	900	Aug. 25, 1888	Feb. 21, 1889				Do.
Norris, James W	Treasury	720	Aug. 28, 1888	Feb. 28, 1889				Non-competitive, fireman, general rule 3, clause 2 (c).
Irwin, Thomas J	War	1,000	Sept. 12, 1888					Non-competitive, clerk, general rule 3, clause 2 (c).
Brown, John R	Treasury	900	Sept. 20, 1888					Non-competitive, copyist, general rule 3, clause 2 (c).
Erhardt, John	Agricultural	720	Oct. 6, 1888	Apr. 6, 1889				Non-competitive, pressman, general rule 3, clause 2 (c).
Jarvis, Miss Ella	Treasury	700	Nov. 19, 1888	May 18, 1889				Non-competitive, money counter, general rule 3, clause 2 (e).
Schoenborn, William A	Interior	1,000	Nov. 28, 1888	May 28, 1889				Mechanical draughting.
Ray, Robert Clary	Navy	*3	Dec. 6, 1888	June 6, 1889				Expert in nautical science, Hydrographic Office.
McLaughlin, James B	War	1,800	....do					Non-competitive, clerk, departmental rule 2, clause 4.
Evans, Waring E	Interior	1,400	Dec. 11, 1888					Non-competitive, clerk, general rule 3, clause 2 (c).
Zimmerman, Charles St. V	....do	720	Dec. 26, 1888					Non-competitive, copyist, general rule 3, clause 2 (c).
Burch, Harry B	....do	720	....do					Do.
Cowell, Miss Bessie P	Treasury	900	Feb. 26, 1889					Do.
Lawton, Miss Bessie S	War	1,000	Mar. 11, 1889					Non-competitive, clerk, general rule 3, clause 2 (c).
Skinner, Frank M	Treasury	1,200	Mar. 14, 1889					Do.
Erbach, John	Interior	720	Mar. 23, 1889					Non-competitive, photographer, general rule 3, clause 2 (c).

TABLE 36.—*Showing, by States, the names of those appointed in the classified departmental service, charged to the general apportionment, during the year ended June 30, 1889, together with the changes in the status or grade of such persons occurring during that period.*

Name.	Probationary appointment.			Absolute appointment.	Promoted.		Separated from service.	Examination taken.
	Department.	Salary.	Date.		To—	Date.		
ALABAMA.								
Hamner, Charles W	War	$1,000	July 24, 1888	Jan. 24, 1889	$1,200	Nov. 10, 1888		Clerk.
O'Connor, Charles E	Interior	900	Oct. 11, 1888					Non-competitive, copyist, general rule 3, clause 2 (*c*).
Fellows, Harry Andrew	War	1,000	Oct. 24, 1888	Apr. 24, 1889				Clerk.
Lindsay, Miss Ida B	Treasury	900	Feb. 21, 1889					Non-competitive, copyist, general rule 3, clause 2 (*c*).
Dawson, Annie B	Interior	720	June 17, 1889					Type-writer.
ARIZONA.								
Sues, Otto Louis*	Interior	900	Dec. 20, 1888	June 20, 1889				Copyist.
ARKANSAS.								
Starck, Arle W	Labor	1,200	July 14, 1888	Jan. 14, 1889				Clerk.
Williamson, Edwin	War	1,000	Dec. 11, 1888	June 11, 1889	1,200	May 14, 1889		Do.
Edwards, William Walton	... do	1,000	Apr. 6, 1889					Do.
CALIFORNIA.								
Thompson, Hugh S	War	1,000	July 19, 1888	Jan. 19, 1889	1,200	Nov. 10, 1888		Clerk.
Murphy, Daniel C	....do	1,000	Oct. 16, 1888	Apr. 16, 1889				Stenography.
McMillan, John T		†83	Oct. 17, 1888	May 1, 1889				Nautical expert, non-competitive, general rule 3, section 2, clause (*c*).
Blumenberg, Miss Magda M	Post-Office	900	Nov. 15, 1888	May 20, 1889				Type-writing.
Campbell, James H	Treasury	900	Nov. 19, 1888	May 18, 1889				Non-competitive, money counter, general rule 3, clause 2 (*c*).
O'Donoghue, Michael F	Navy	1,200	Feb. 4, 1889					Law.
Bone, Jennie C	Treasury	720	Feb. 26, 1889					Non-competitive, money counter, general rule 3, clause 2 (*c*).
COLORADO.								
Reigart, Mrs. Frances A	Interior	900	Sept. 1, 1888					Non-competitive, copyist, general rule 3, clause 2 (*c*).
Junken, Charles A	War	1,000	Mar. 18, 1889					Computer, Ordnance Office.
McRae, Annie	Treasury	900	Apr. 17, 1889					Non-competitive, copyist, general rule 3, clause 2 (*c*).

*Preference, section 1754, Revised Statutes. †Per month.

Name.	Probationary appointment.			Absolute appointment.	Promoted.		Separated from service.	Examination taken.
	Department.	Salary.	Date.		To—	Date.		
INDIANA.								
Rose, Joseph N	Agricultural	$1,200	Aug. 6, 1888	Feb. 15, 1889				Botany.
Brady, John F.*	Interior	900	Dec. 17, 1888	June 17, 1889				Copyist.
Key, Anna M	Agricultural	720	Dec. 26, 1888	June 26, 1889	$920	Feb. 16, 1889		French.
McBride, Charles R	Interior	1,600	Feb. 26, 1889					Book-keeping.
Vickery, William J	Post-Office		June 18, 1889					Post-office inspector.
IOWA.								
Allen, Thomas G.*	Post-Office	900	July 25, 1888	Jan. 23, 1889				Copyist.
Piozet, Emile	Interior	1,000	Dec. 31, 1888	June 30, 1889				Clerk.
Leonard, William E	War	1,000	Feb. 12, 1889					Do.
Pitts, Will Stanley	do	1,000	Apr. 2, 1889					Do.
Durham, Miss Mary	Treasury	720	Feb. 26, 1889	Mar. 9, 1889				Non-competitive, copyist, general rule 3, clause 2 (c).
Burson, Emuella R	Interior							General rule 3, clause 2 (c).
Raymond, James S	War	1,000	June 8, 1889					Clerk.
Elce, Charles E	do	480	June 21, 1889		600	June 25, 1889		Copyist.
KANSAS.								
Forbes, Elmer A	War	1,000	Aug. 14, 1888	Feb. 10, 1889	1,200	Feb. 4, 1889		Clerk.
Hanna, B. W	Navy	1,600	Apr. 4, 1889					Stenographer, departmental rule 2, paragraph 4.
Call, Lewis W	War	1,600	Sept. 11, 1888	Mar. 11, 1889				Special law clerk.
Thompson, Alvah H	Interior	900	Jan. 31, 1889					Clerk.
Reichelderfer, Sophia W. H	Treasury	13	Apr. 20, 1889					Tracer, Supervising Architect's Office.
Swank, Orville S	U. S. Civil Service.	900	Apr. 23, 1889					Stenography and type-writing.
Ainsworth, Judah T	Interior	900	June 15, 1889					Stenography.
KENTUCKY.								
Mosher, Robert B	War	1,200	July 26, 1888	Jan. 26, 1889				Clerk.
Pettis Walter B	Interior	2,000	Aug. 30, 1888	Mar. 3, 1889				Principal examiner Pension Office.
Evarts, Truman C	Post-Office	900	Aug. 27, 1888	Feb. 25, 1889				Non-competitive, copyist, general rule 3, clause 2 (c).
Stanton, Henry T	Interior	1,200	Sept. 8, 1888					Non-competitive, clerk, general rule 3, clause 2 (c).
Miller, Charles T	Treasury	660	Oct. 16, 1888	Apr. 16, 1889	900	Feb. 5, 1889		Copyist.
Young, Clarence E	Navy	900	Nov. 20, 1888	June 20, 1889				Type writing.

							Resigned May 11, 1889.	Non-competitive, nautical science, general rule 3, clause 2 (*e*).
Hall, Eugene F	Interior	1,000	Jan. 11, 1889					Clerk.
Baum, Edgar	Treasury	720	Mar. 5, 1889		900	May 1, 1889		Copyist.
Henry, Edward S	Interior	1,200	June 1, 1889					Assistant examiner.
Quisenberry, Anderson C	War	1,000	June 4, 1889					Clerk.
Dickey, Robert J	Interior	720	June 18, 1889					Copyist.
LOUISIANA.								
Landry, J. Beauregard	Justice	900	Sept. 10, 1888	Mar. 9, 1889				Copyist.
Steward, Willard G	War	1,000	Sept. 21, 1888				Resigned Mar. 5, 1889.	Clerk.
Mitchell, Oscar V	do	1,000	May 27, 1889					Do.
Carter, Mary D	Interior	720	Mar. 12, 1889					Non-competitive, copyist, general rule 3, clause 2 (*c*).
MAINE.								
Verrill, Charles H	Labor	1,200	July 14, 1888	Jan. 14, 1889				Clerk.
Merrill, Bertha L	Interior	900	Aug. 14, 1888	Feb. 14, 1889				French.
Pope, Hanna E	do	900	Dec. 17, 1888	June 17, 1889				Do.
Fitz, Henry E*	Post-Office	1,200	May 24, 1889					Post-office inspector.
MARYLAND.								
Brooke, Albin J	Treasury	660	Sept. 1, 1888	Mar. 1, 1889				Non-competitive, fireman, general rule 2, clause 2 (*e*).
Varden, Miss Ella R. T	do	900	Sept. 4, 1888					Non-competitive, copyist, special departmental rule 2.
Misell, William	Post-Office	1,000	Sept. 14, 1888	Mar. 14, 1889				Non-competitive, assistant engineer, general rule 3, clause 2 (*e*).
Toldridge, Miss Elizabeth A	Treasury	700	Nov. 19, 1888	May 18, 1889				Non-competitive, money counter, general rule 3, clause 2 (*e*).
Page, James	do	‡50	Nov. 28, 1888	May 28, 1889	900	Jan. 1, 1889		Computer, Coast and Geodetic Survey.
Russell, Lucy B	Interior	720	Dec. 26, 1888					Non-competitive, copyist, general rule 3, clause 2 (*c*).
Caughy, Charles M	State	1,200	Jan. 29, 1889					State.
Lazarus, Edgar M	War	1,200	Feb. 18, 1859					Draughting, Quartermaster-General's Office.
Conrad, William*	do	1,000	Feb. 20, 1889					Clerk.
Dashiell, Julius M	Navy	‡3	May 16, 1889					Nautical science.
Luckey, Josephine	Interior	720	Mar. 12, 1889					Non-competitive, copyist, general rule 3, clause 2 (*c*).
Calvert, Araminta C	do	720	do					Do.
Terrell, William M	do	720	Apr. 16, 1889					Do.
Chapman, Harry M	Post-Office	1,000	June 5, 1889					Non-competitive, clerk, postal rule 6, and departmental rule 8.

*Preference, section 1754, Revised Statutes. †Per diem. ‡Per month.

TABLE 36.—*Showing, by States, the names of those appointed in the classified departmental service, charged to the general apportionment, etc.*—Cont'd.

Name.	Probationary appointment.			Absolute appointment.	Promoted		Separated from service.	Examination taken.
	Department.	Salary.	Date.		To—	Date.		
MASSACHUSETTS.								
Maverick, Manton	War	$1,000	Aug. 6, 1888	Feb. 6, 1889	$1,200	Nov. 10, 1888		Clerk.
Haskel, William L	Navy	1,200	Aug. 21, 1888					Stenography and type-writing.
Childs, Herbert L	War	900	Sept. 29, 1888	Mar. 29, 1889				Copyist.
Tracy, Porter	do	1,200	Oct. 1, 1888	Apr. 1, 1889				Craniological and anthropometrical measurements.
Flint, Albert S	Navy	1,200	Oct. 31, 1888					Computer, Naval Observatory.
Clement, George H	Treasury	660	Jan. 7, 1889					Copyist.
Heard, Albert F	War	1,800	Feb. 5, 1889					Non-competitive, clerk, departmental rule 2, clause 4.
Messervy, William	do	480	Apr. 2, 1889		600 720 840	Apr. 6, 1889 Apr. 22, 1889 June 1, 1889		Copyist.
Rich, William J	Interior	1,200	June 4, 1889					Assistant examiner, Patent Office.
MICHIGAN.								
Smith, Sanford William	War	1,200	July 28, 1888	Jan. 28, 1889				Clerk.
Jarvis, Milford M	do	1,000	Aug. 24, 1888	Feb. 24, 1889				Do.
Miller, Libbie H	Interior	900	Sept. 4, 1888	Mar. 4, 1889				Type-writing.
Butler, James	Navy	1,000	Oct. 3, 1888	May 14, 1889				Book-keeping.
Weber, Casper C	War	1,000	Nov. 8, 1888	May 8, 1889				Type-writing.
Norvell, Willard S	Treasury	900	Nov. 19, 1888	May 19, 1889				Non-competitive, money counter, general rule 3, clause 2 (*s*).
Harlan, Homer B	War	1,200	Nov. 21, 1888	May 21, 1889				Clerk.
Olmsted, Hiram F.*	Labor	1,200	Dec. 3, 1888	June 3, 1889				Do.
Stowell, Mrs. Louisa Reed	Agricultural	1,800	Mar. 2, 1889					Botany.
Hussey, William J	Navy	1,000	Apr. 16, 1889					Computer, Nautical Almanac.
Andrus, Emmet C	War	1,000	May 31, 1889					Clerk.
MINNESOTA.								
Hayden James B.*	Interior	900	Jan. 17, 1889	July 17, 1889				Copyist.
Olesen, Tory	do	1,000	Jan. 22, 1889					Clerk.
Brandenberg, Edwin C	Justice	900	May 16, 1889					Type-writing.
MISSISSIPPI.								
Jayne, Robert K	War	1,000	Sept. 4, 1888				Resigned Feb. 28, 1889	Clerk.
Derrick, Jacob B	Post-Office	900	Oct. 11, 1888	Apr. 10, 1889				Copyist.
Gill, Julian J	War	1,000	Nov. 19, 1888	May 19, 1889				Clerk.

Leonard, William D	Interior	900	Oct. 11, 1888					Non-competitive, copyist, general rule clause 2 (c).
Wendel, Robert P	War	1,000	Feb. 4, 1889					Clerk.
Porter, Albert T	do	1,000	June 4, 1889					Do.
Brown, Pattie	Interior	720	Mar. 29, 1889					Non-competitive, copyist, general rule 3, clause 2 (c).
MISSOURI.								
Holt, Warner	Interior	1,400	Aug. 2, 1888	Feb. 2, 1889			Dismissed May 10, 1889	Medical pension examiner.
Moore, George M	do	1,400	Aug. 23, 1888	Feb. 23, 1889				Special pension examiner.
Holton, Fred: C	do	1,200	Sept. 3, 1888	Mar. 3, 1889				Assistant examiner, Patent Office.
Eaton, Edson De Wint	Navy	1,000	Oct. 3, 1888				Died Mar. 31, 1889	Computer Nautical Almanac Office.
Korhammer, Louise M	Interior	900	Jan. 22, 1889					German.
Lewis, William H	Navy	900	Jan. 25, 1889					Type-writing.
Gareschè, Louis	War	480	Apr. 6, 1889	Apr. 22, 1889			Expired by limitation June 30, 1889.	Copyist.
Garriott, Miss Grace	Interior	600	Apr. 20, 1889		900	June 21, 1889		Tracer.
Wilkinson, George L	do	1,200	June 1, 1889					Assistant examiner.
NEBRASKA.								
Terry, Lyman Joseph	War	1,200	Oct. 1, 1888	Apr. 1, 1889				Clerk.
Wells, Oscar F	Treasury	660	Feb. 2, 1889					Do.
Whittington, Thomas A	Post-Office	900	May 20, 1889					Copyist.
NEW HAMPSHIRE.								
Kimball, Mrs. Lotta L	Interior	†2	Sept. 13, 1888	Mar. 13, 1889	1,200	June 14, 1889		Type-writing.
Hildreth, David M	Treasury	900	Nov. 30, 1888	May 30, 1889				Topographic draughting.
NEW JERSEY.								
Blaser, Peter W	Interior	1,400	Nov. 20, 1888	May 20, 1889				Special pension examiner.
Girault, Arthur N	War	1,000	Nov. 23, 1888	May 26, 1889	1,200	Mar. 16, 1889		Clerk.
Schuyler, Magdalena C	Interior	900	Dec. 28, 1888	June 28, 1889				French.
Manu, Hannah N	Treasury	1,200	Mar. 2, 1889					Non-competitive, clerk, special departmental rule 2.
Clark, Thomas J	War	1,000	June 3, 1889					Clerk.
Devine, Patrick H	Interior	900	June 14, 1889					Stenography.
Jerrell, Herbert P	do	1,200	Sept. 19, 1888	Mar. 19, 1889				Assistant examiner, Patent Office.
NEW YORK.								
Coville, Frederick V	Agricultural	1,200	July 5, 1888	Jan. 5, 1889	1,400	Jan. 20, 1889		Botany.
Adams, Newton C	Labor	1,200	July 14, 1888	Jan. 14, 1889				Clerk.
Barnes, Harry S	Post-Office	900	Aug. 13, 1888	Feb. 11, 1889				Copyist.
Bouck, Hager	Treasury	900	Sept. 1, 1888	Feb. 28, 1889				Do.
Heron, John J	War	1,200	Sept. 10, 1888	Mar. 10, 1889				Proof-reading.
Hunting, Ernest R	do	1,000	Sept. 11, 1888	do				Clerk.

*Preference, section 1754, Revised Statutes. †Per diem.

TABLE 36.—*Showing, by States, the names of those appointed in the classified departmental service, charged to the general apportionment, etc.*—Cont'd.

Name.	Probationary appointment.			Absolute appointment.	Promoted.		Separated from service.	Examination taken.
	Department.	Salary.	Date.		To—	Date.		
NEW YORK—continued.								
McNamara, Mary, Miss	Treasury	$840	Sept. 12, 1888					Non-competitive, copyist, general rule 3, clause 2 (*c*).
Mac Court, Patrick M	do	1,000	Oct. 1, 1888					Do.
Levis, Francis Adelbert	Navy	†83	Oct. 3, 1888	May 14, 1889				Non-competitive, nautical science, general rule 3, clause 2 (*c*).
Petingale, Samuel K	Treasury	900	Oct. 6, 1888					Copyist, special departmental rule 2.
Averill, Frank L	Interior	1,200	Oct. 8, 1888	Apr. 8, 1889				Fourth assistant examiner, Patent Office.
Ewing, Thomas, jr	do	1,200	Oct. 22, 1888	Apr. 22, 1889				Do.
Howley, John J	Post-Office	1,000	Nov. 13, 1888	May 20, 1889				Stenography.
Murray, Charles E	Treasury	1,000	Nov. 14, 1888	May 13, 1889			Resigned May 31, 1889.	Book-keeping.
Van Dyne, Frederick	War	1,200	do	May 14, 1889				Stenography and type-writing.
Kelly, John Francis	do	1,000	Nov. 27, 1888	May 27, 1889				Clerk.
White, Katie S	Navy	720	Dec. 3, 1888	June 3, 1889				Type-writing.
Helmer, Burton	do	900	Dec. 10, 1888	June 10, 1889				Do.
Kirwin, Henry S	Interior	900	Dec. 20, 1888	June 20, 1889				Copyist.
McDevitt, Patrick H	Treasury	900	Dec. 22, 1888					Non-competitive, copyist, general rule 3, clause 2 (*c*).
Bausch, Paul	War	1,800	Dec. 27, 1888	June 27, 1889				Civil engineer, Quartermaster-General's Office.
Rowe, John S	Treasury	†4	Jan. 2, 1889					Topographical draughtsman.
Govern, James F	do	720	Jan. 5, 1889					Non-competitive, fireman general rule 3, clause 2 (*c*).
Evans, John	Interior	1,200	Feb. 15, 1889					Proof-reader, Geological Survey.
Edie, Christopher	War	660	Mar. 6, 1889				Discharged Apr. 29, 1889	Copyist.
Joyce, Alice R	Interior	†2	Mar. 25, 1889		$900	June 18, 1889		Type-writing (Hammond).
Day, Edward W	War	900	Apr. 22, 1889					Proof-reader.
Mason, Orville J	do	1,000	May 6, 1889					Type-writing.
Becker, Joseph	Interior	1,200	do					Fourth assistant examiner, Patent Office.
Mac Kaye, Harold S	do	1,200	do					Do.
Tanner, John B	do	1,000	May 9, 1889					Stenography and type-writing.
Moodie, Mrs. Aimee	Treasury	1,200	May 13, 1889					Book-keeper.
Clark, Charles R	Post-Office	1,200	June 13, 1889					Post-office inspector.
Hayford, John F	Treasury	600	June 22, 1889					Computer, Coast and Geodetic Survey.
NORTH CAROLINA.								
Davenport, William S	Treasury	900	July 30, 1888	Jan. 30, 1889				Copyist.
Ross, Duncan	Interior	1,400	Aug. 2, 1887	Feb. 2, 1889			Dismissed Apr. 20, 1889	Special pension examiner.
Meekins, Edward N		1,200	Aug. 4, 1888	Feb. 4, 1889				Clerk.
Davidson W.			6, 1888	Feb. 6, 1889				Do.

Norwood, Chalmers C	Interior	1,200	Aug. 16, 1888	Feb. 16, 1889				Office
Gulick, William Beckman	Navy	1,200	Sept. 3, 1888	Mar. 3, 1889	1,400	Mar. 3, 1889		Book-keeping.
Stearns, John Warren	do	‡3.20	Oct. 8, 1888	Apr. 8, 1889				Nautical science.
Graham, James A	Interior	1,400	Nov. 27, 1888	May 27, 1889			Dismissed June 30, 1889	Special examiner, Pension Office.
Jackson, Marshall P	Treasury	900	Dec. 3, 1888	June 3, 1889				Topographic draughting.
Johnston, Belle A	Interior	720	Dec. 26, 1888					Non-competitive, copyist, general rule 3, clause 2 (c).
Moore, Mary R	Treasury	720	Jan. 4, 1889		840	June 26, 1889		Non-competitive, copyist, special departmental rule 2.
Holt, Robert Oscar	Navy	1,000	Jan. 28, 1889					Book-keeping.
Schweinitz, Emil A. von	Agricultural	1,200	Jan. 26, 1889					Chemistry.
Banks, Julia B	Interior	720	Mar. 12, 1889					Non-competitive, copyist, general rule 3, clause 2 (c).
Smith, Margaret A	do	900	May 29, 1889					Type-writing.
OHIO.								
Shoemaker, Joseph A*	U.S. Civil Service Com.	840	Sept. 6, 1888	Mar. 6, 1889				Copyist.
Poultney, William W	Treasury	900	Sept. 13, 1888	Mar. 13, 1889				Book-keeping.
Ingalls, David	Post-Office	1,000	Sept. 26, 1888	Apr. 12, 1889				Do.
Daly, Walter F	War	1,000	Oct. 16, 1888	Apr. 17, 1889				Type-writing.
Durant, Horace B	Interior	900	Oct. 27, 1888	Apr. 27, 1889				Do.
Evans, George A*	Treasury	900	Nov. 1, 1888				Removed Feb. 28, 1889.	Book-keeping.
Ailes, Milton E	do	1,000	Dec. 5, 1888	June 5, 1889				Law clerk.
Duffy, Stephen G	Interior	1,400	Dec. 20, 1888	June 20, 1889				Special pension examiner.
McElroy, Karl Pomeroy	Agricultural	600	Jan. 26, 1889					Chemistry.
Cherryholmes, William K	Interior	1,000	Jan. 29, 1889					Medical pension examiner.
Atkin, Mrs. Ella	do	800	Feb. 15, 1889					Non-competitive, model attendant, general rule 3, clause 2 (c).
Booth, John L	do	1,000	Apr. 29, 1889					Non-competitive, assistant engineer, general rule 3, clause 2 (c).
King, William M	Agricultural	900	June 7, 1889					Non-competitive, copyist, departmental rule 2, clause 4.
Peer, Frederick D	Post-Office	1,200	June 22, 1889					Post-office inspector.
OREGON.								
Norton, Henry A	Interior	1,600	July 18, 1888					Non-competitive, clerk, departmental rule 2, section 4.
PENNSYLVANIA.								
Zane, George S	Post-Office	900	July 26, 1888	Jan. 23, 1889				Stenography and type-writing.
Cheney, James W	do	900	Aug. 1, 1888	Jan. 28, 1889				Copyist.
Rosser, Leonard Y	Treasury	720	Sept. 1, 1888	Feb. 28, 1889				Non-competitive, fireman, general rule 3, section 2, clause (c).
McElhone, James F	State	1,200	Sept. 7, 1888					State.
Marshall, Elmer W	War	1,000	Sept. 5, 1888	Mar. 5, 1889				Clerk.
Gulentz, Charles	do	1,200	Sept. 15, 1888	Mar. 17, 1889				Book-keeping.

* Preference, section 1754 Revised Statutes. † Per month. ‡ Per diem.

TABLE 36.—*Showing, by States, the names of those appointed in the classified departmental service, charged to the general apportionment, etc.*—Cont'd.

Name.	Probationary appointment.			Absolute appointment.	Promoted		Separated from service.	Examination taken.
	Department.	Salary.	Date.		To—	Date.		
PENNSYLVANIA—continued.								
Northrop, Clarence G	Navy	$1,000	Oct. 3, 1888	Apr. 8, 1889				Type-writing.
Jaishon, Philip	War	1,000	Oct. 31, 1888	Apr. 30, 1889				Chinese and Japanese languages.
Fesaler, Jacob H	Navy	18	Oct. 20, 1888	May 14, 1889				Stenography and type-writing.
Smith, William M	War	1,000	Dec. 1, 1888	June 1, 1889	$1,200	May 14, 1889		Clerk.
Booth, Edw. H	do	1,000	Dec. 8, 1888	June 8, 1889				Type-writing.
Dougherty, William H	Interior	720	Dec. 26, 1888					Non-competitive, copyist, general rule 3, clause 2 (c).
McCarter, William*	do	900	Dec. 28, 1888	June 28, 1889				Copyist.
Smith, Charles E	do	720	Dec. 31, 1888					Non-competitive, copyist, general rule 3, clause 2 (c).
Wilson, Anna E	Treasury	900	Jan. 24, 1889					Non-competitive, copyist, special departmental rule 2.
Banzhaf, Charles	Interior	900	Feb. 25, 1889					Non-competitive, copyist, general rule 3, clause 2 (c).
Rudy, Joseph P	Justice	900	Mar. 1, 1889					Type-writing.
Biddis, John D	Treasury	1,800	Mar. 2, 1889					Non-competitive, clerk, departmental rule 2, clause 4.
James, Mary J	Interior	900	Mar. 7, 1889					Non-competitive, model attendant, general rule 3, clause 2 (c).
Howery, Jefferson D	War	1,000	Apr. 22, 1889					Type-writing.
Aspinwall, Algernon A	Interior	1,800	May 13, 1889					Non-competitive, clerk, departmental rule 2, clause 4.
Holden George C	Post-Office	1,200	May 22, 1889					Non-competitive, post-office inspector, railway-mail rule 5 and departmental rule 3.
Magee, John A*	War	1,000	May 28, 1889					Clerk.
Griggs, Henry B	Post-Office	1,200	June 3, 1889					Non-competitive, post-office inspector, railway-mail rule 5 and departmental rule 3.
Fuchs, George A	War	1,000	June 12, 1889					French and German.
Caldwell, Samuel D	do	480	June 13, 1889		600	June 25, 1889		Copyist.
Deets, Charles Henry	Treasury	1,000	June 17, 1889					Topographical draughtsman.
Giles, William W*	War	1,000	June 20, 1889					Clerk.
Moore, Wallace C	Post-Office	1,200	June 22, 1889					Post-office inspector.
RHODE ISLAND.								
Ashworth, George W	War	1,000	Aug. 13, 1888	Feb. 13, 1889				Clerk.
Sayles, Arthur U	Post-Office	900	Mar. 27, 1889					Copyist.

Norwood, Chalmers C.	Interior	1,200	Aug. 16, 1888	Feb. 16, 1889				Fourth assistant examiner, Patent Office
Gulick, William Beekman	Navy	1,200	Sept. 3, 1888	Mar. 3, 1889	1,400	Mar. 3, 1889		Book-keeping.
Stearns, John Warren	do	‡3.20	Oct. 8, 1888	Apr. 8, 1889				Nautical science.
Graham James A	Interior	1,400	Nov. 27, 1888	May 27, 1889			Dismissed June 30, 1889	Special examiner, Pension Office.
Jackson, Marshall P	Treasury	900	Dec. 8, 1888	June 8, 1889				Topographic draughting.
Johnston, Belle A	Interior	720	Dec. 26, 1888					Non-competitive, copyist, general rule 3, clause 2 (c).
Moore, Mary R	Treasury	720	Jan. 4, 1889		840	June 25, 1889		Non-competitive, copyist, special departmental rule 2.
Holt, Robert Oscar	Navy	1,000	Jan. 28, 1889					Book-keeping.
Schweinitz, Emil A. von	Agricultural	1,200	Jan. 26, 1889					Chemistry.
Banks, Julia B.	Interior	720	Mar. 12, 1889					Non-competitive, copyist, general rule 3, clause 2 (c).
Smith, Margaret A.	do	900	May 29, 1889					Type-writing.
OHIO.								
Shoemaker, Joseph A*	U.S. Civil Service Com.	840	Sept. 6, 1888	Mar. 6, 1889				Copyist.
Poultney, William W	Treasury	900	Sept. 13, 1888	Mar. 13, 1889				Book-keeping.
Ingalls, David	Post-Office	1,000	Sept. 26, 1888	Apr. 12, 1889				Do.
Daly, Walter F	War	1,000	Oct. 16, 1888	Apr. 17, 1889				Type-writing.
Durant, Horace B.	Interior	900	Oct. 27, 1888	Apr. 27, 1889				Do.
Evans, George A*	Treasury	900	Nov. 1, 1888				Removed Feb. 28, 1889.	Book-keeping.
Ailes, Milton E	do	1,000	Dec. 5, 1888	June 5, 1889				Law clerk.
Duffy, Stephen G	Interior	1,400	Dec. 20, 1888	June 20, 1889				Special pension examiner.
McElroy, Karl Pomeroy	Agricultural	660	Jan. 26, 1889					Chemistry.
Cherryholmes, William K.	Interior	1,000	Jan. 29, 1889					Medical pension examiner.
Atkin, Mrs. Ella	do	800	Feb. 15, 1889					Non-competitive, model attendant, general rule 3, clause 2 (c).
Booth, John L.	do	1,000	Apr. 29, 1889					Non-competitive, assistant engineer, general rule 3, clause 2 (c).
King, William M	Agricultural	900	June 7, 1889					Non-competitive, copyist, departmental rule 2, clause 4.
Peer, Frederick D	Post-Office	1,200	June 22, 1889					Post-office inspector.
OREGON.								
Norton, Henry A	Interior	1,600	July 18, 1888					Non-competitive, clerk, departmental rule 2, section 4.
PENNSYLVANIA.								
Zane, George S.	Post-Office	900	July 26, 1888	Jan. 23, 1889				Stenography and type-writing.
Cheney, James W.	do	900	Aug. 1, 1888	Jan. 28, 1889				Copyist.
Rosser, Leonard Y.	Treasury	720	Sept. 1, 1888	Feb. 28, 1889				Non-competitive, fireman, general rule 3, section 2, clause (c).
McElhone, James F.	State	1,200	Sept. 7, 1888					State.
Marshall, Elmer W	War	1,000	Sept. 5, 1888	Mar. 5, 1889				Clerk.
Gulents, Charles	do	1,200	Sept. 15, 1888	Mar. 17, 1889				Book-keeping.

* Preference, section 1754 Revised Statutes. † Per month. ‡ Per diem.

TABLE 36.—*Showing, by States, the names of those appointed in the classified departmental service, charged to the general apportionment, etc.*—Cont'd.

Name.	Probationary appointment.			Absolute appointment.	Promoted		Separated from service.	Examination taken.
	Department.	Salary.	Date.		To—	Date.		
PENNSYLVANIA—continued.								
Northrop, Clarence G	Navy	$1,000	Oct. 3, 1888	Apr. 8, 1889				Type-writing.
Jaishon, Philip	War	1,000	Oct. 31, 1888	Apr. 30, 1889				Chinese and Japanese languages.
Fessler, Jacob H	Navy	†3	Oct. 20, 1888	May 14, 1889				Stenography and type-writing.
Smith, William M	War	1,000	Dec. 1, 1888	June 1, 1889	$1,200	May 14, 1889		Clerk.
Booth, Edw. H	do	1,000	Dec. 8, 1888	June 3, 1889				Type-writing.
Dougherty, William H	Interior	720	Dec. 26, 1888					Non-competitive, copyist, general rule 3, clause 2 (*c*).
McCarter, William*	do	900	Dec. 28, 1888	June 28, 1889				Copyist.
Smith, Charles E	do	720	Dec. 31, 1888					Non-competitive, copyist, general rule 3, clause 2 (*c*).
Wilson, Anna E	Treasury	900	Jan. 24, 1889					Non-competitive, copyist, special departmental rule 2.
Banzhaf, Charles	Interior	900	Feb. 25, 1889					Non-competitive, copyist, general rule 3, clause 2 (*c*).
Rudy, Joseph P	Justice	900	Mar. 1, 1889					Type-writing.
Biddis, John D	Treasury	1,800	Mar. 2, 1889					Non-competitive, clerk, departmental rule 2, clause 4.
James, Mary J	Interior	900	Mar. 7, 1889					Non-competitive, model attendant, general rule 3, clause 2 (*c*).
Howery, Jefferson D	War	1,000	Apr. 22, 1889					Type-writing.
Aspinwall, Algernon A	Interior	1,800	May 13, 1889					Non-competitive, clerk, departmental rule 2, clause 4.
Holden George C	Post-Office	1,200	May 22, 1889					Non-competitive, post-office inspector, railway-mail rule 5 and departmental rule 8.
Magee, John A*	War	1,000	May 28, 1889					Clerk.
Griggs, Henry B	Post-Office	1,200	June 3, 1889					Non-competitive, post-office inspector, railway-mail rule 5 and departmental rule 8.
Fuchs, George A	War	1,000	June 12, 1889					French and German.
Caldwell, Samuel D	do	480	June 13, 1889		600	June 25, 1889		Copyist.
Deets, Charles Henry	Treasury	1,000	June 17, 1889					Topographical draughtsman.
Giles, William W*	War	1,000	June 20, 1889					Clerk.
Moore, Wallace C	Post-Office	1,200	June 22, 1889					Post-office inspector.
RHODE ISLAND.								
Ashworth, George W	War	1,000	Aug. 13, 1888	Feb. 13, 1889				Clerk.
Sayles, Arthur U	Post-Office	900	Mar. 27, 1889					Copyist.

SOUTH CAROLINA.								
Tennent, Edward S	Post-Office	1,000	Sept. 24, 1888	Apr. 17, 1889				Book-keeping.
Fleming, Susan V. Mrs	Interior	900	Oct. 22, 1888					Non-competitive, copyist, general rule 3, clause 2 (c).
Fox, Gilbert D	War	1,000	Feb. 18, 1889					Clerk.
Welch, Williams	Treasury	900	May 8, 1889				Resigned Sept. 30, 1889	Copyist.
Logan, Roswell P	War	600	June 7, 1889				Discharged June 9, 1889	Do.
TENNESSEE.								
Cumming, Henry H	War	1,000	July 31, 1888	Jan. 31, 1889	1,200	Nov. 10, 1888		Clerk.
Moore, Noble	do	1,000	Aug. 15, 1888	Feb. 15, 1889				Do.
Faucett, Nat. S	Navy	1,200	Sept. 3, 1888	Mar. 3, 1889	1,400	Mar. 3, 1889		Book-keeping.
Caldwell, William H	do	1,200	Sept. 20, 1888	Mar. 20, 1889				Naval War Records.
Calhoun, Will N	War	1,000	Dec. 3, 1888	June 3, 1889				Clerk.
Jennings, David L. E	do	1,000	Dec. 26, 1888	June 26, 1889				Do.
Fulton, Creed. M	do	1,000	Jan. 9, 1889					Do.
TEXAS.								
McCullough, Belle E §	Interior	900	June 8, 1888					Copyist, general rule 3, clause 2 (c)
Moreland, Samuel A	War	1,200	Aug. 1, 1888	Feb. 1, 1889				Clerk.
Floyd, Henry	do	1,000	Aug. 20, 1888	Feb. 20, 1889				Do.
Straughan, Samuel L	do	1,000	Sept. 3, 1888	Mar. 3, 1889				Do.
Robbins, Ansel J	do	1,000	Oct. 12, 1888	Apr. 12, 1889				Do.
Tracy, Seth Elliott	do	1,200	Nov. 26, 1888	May 23, 1889				Do.
Malloy, Catherine	Interior	720	Dec 12, 1888					Non-competitive, copyist, general rule 3, clause 2 (c).
Barksdale, Noel W	War	1,000	Jan. 2, 1889					Clerk.
Thompson, Edwin S	do	1,000	Apr. 10, 1889					Do.
VERMONT.								
Billings, Cornelius C	Navy	†3.20	Oct. 8, 1888	Apr. 8, 1889				Nautical science.
Billings, Cornelius C	Interior	1,200	May 27, 1889					Fourth assistant examiner Patent Office.
Goodall, Henry S	do	1,200	May 29, 1889					Do.
VIRGINIA.								
Choate, Columbus D	Interior	900	Sept. 1, 1888					Non-competitive, copyist, general rule 3, clause 2 (c).
Lynch, Millard F	War	1,200	Feb. 1, 1889					Architectural draughtsman, Quartermaster-General's Office, War Department.
Hester, Frank D	Interior	900	Mar. 13, 1889					Non-competitive, copyist, general rule 3, clause 2 (c).
Green, Thomas A	do	900	Mar. 25, 1889					Do.
Mills, Ellis	State	1,600	Apr. 1, 1889					Non-competitive, State Department, departmental rule 2, par. 4.
Thompson, Elias B. *	War	1,000	May 4, 1889					Clerk.

* Preference, section 1754, Revised Statutes. † Per diem. ‡ Transferred to Navy Department March 2, 1889. § Omitted from fifth report.

TABLE 36.—*Showing, by States, the names of those appointed in the classified departmental service, charged to the general apportionment, etc.*—Cont'd.

Name.	Probationary appointment.			Absolute appointment.	Promoted.		Separated from service.	Examination taken.
	Department.	Salary.	Date.		To—	Date.		
WEST VIRGINIA.								
Buffington, Peter C	Treasury	$1,400	July 20, 1888					Non-competitive, clerk, department rule 2, clause 4.
Hayden, Raphael	Justice	1,200	Sept. 19, 1888	Apr. 2, 1889				Telegraphy and stenography.
Paxton, Mollie V	Interior	900	Jan. 15, 1889					Type-writing (Hammond).
Ramsey, Marathon M	War	1,000	Jan. 14, 1889					French, German, Spanish, and Italian languages.
Roush, Carrie J	Interior	720	Dec. 26, 1888		$900	May 3, 1889		Non-competitive, copyist, general rule 3, clause 2 (c).
Mason, Bessie W	do	720	Dec. 31, 1888					Do.
WISCONSIN.								
Johnson, John B	Post-Office	900	July 27, 1888	Jan. 26, 1889				Copyist.
Cook, Watson H	Interior	1,400	Aug. 1, 1888				Dismissed June 20, 1889	Non-competitive, clerk, general rule 3, clause 2 (c).
Lucas, James H	Post-Office	1,000	Aug. 18, 1888	Feb. 18, 1889				Non-competitive, assistant engineer, general rule 3, clause 2 (c).
Pike, Charles E	War	1,000	Sept. 1, 1888	Mar. 1, 1889	1,200	Nov. 12, 1888		Clerk.
Scanlan, Charles M	Interior	1,800	Sept. 5, 1888	Mar. 5, 1889			Resigned April, 1889	Principal pension examiner.
Bomsteen, Helmer E	War	1,000	Dec. 1, 1888	June 1, 1889	1,200	Mar. 16, 1889		Clerk.
Lueher, William H	do	1,000	Jan. 7, 1889					Do.
Schultis, Herman J	Interior	900	Jan. 9, 1889					Book-keeper.
Bigelow, Frank H	Navy	1,000	June 17, 1889					Computer Nautical Almanac.
Yates, Arthur	Interior	800	May 3, 1889		1,000	June 19, 1889		Non-competitive, model attendant, general rule 3, clause 2 (c).

TABLE 37.—*Showing, by States, the names of those appointed in the classified departmental service, charged to the female copyist apportionment, during the year ended June 30, 1889, together with the changes in the status or grade of such persons occurring during that period.*

Name.	State.	Probationary appointment.			Absolute appointment.	Promoted.		Examination.
		Department.	Salary.	Date.		To—	Date.	
Cooke, Miss Carrie	Alabama	War	$480	Nov. 20, 1888	May 20, 1889	$600 720	Feb. 16, 1889 Apr. 6, 1889	Copyist.
Pettit, Mary E	Arkansas	Interior	600	Apr. 19, 1889				Do.
Crockett, Susan	California	do	900	Dec. 17, 1888	June 17, 1889			Do.
Luce, Miss Jennie A	Colorado	do	720	June 17, 1889				Do.
Howard, Miss Mary A	Connecticut	War	480	Apr. 20, 1889		720	June 1, 1889	Do.
Todd, Mrs. Arabel W	Delaware	Interior	720	June 6, 1889				Do.
Pierson, Emma V	Florida	do	600	June 1, 1889				Do.
Morgan, Mrs. Georgia L	Georgia	do	900	July 27, 1888	Jan. 27, 1889			Do.
Jekyll, Harriet	Kansas	do	900	Dec. 19, 1888	June 19, 1889			Do.
Bigney, Mrs. Marcella	Louisiana	do	600	Apr. 27, 1889				Do.
Matthews, Margaret L	Maryland	do	600	Apr. 13, 1889				Do.
Wickware, Margaret E	Michigan	Post-Office	900	Oct. 15, 1888	Apr. 12, 1889			Do.
Smith, Florence B	Minnesota	Interior	600	Apr. 17, 1889				Do.
Smith, Harriet L	Mississippi	do	900	Dec. 3, 1888	June 30, 1889			Do.
Church, Miss Carrie P	Nebraska	do	600	May 18, 1889				Do.
McCowan, Kate W	New Jersey	do	900	Jan. 2, 1889				Clerk.
White, Mrs. Ida M	Rhode Island	do	600	June 1, 1889				Copyist.
Wilson, Anne E	South Carolina	do	900	Dec. 22, 1888	June 22, 1889			Do.
Trader, Miss May D	Tennessee	do	900	July 26, 1888	Jan. 26, 1889			Do.
Keach, Mrs. Eleanor W	Vermont	do	900	May 29, 1889				Do.
Chapman, Miss Mattie H	Virginia	War	480	Nov. 14, 1888	May 14, 1889	600 720	Nov. 26, 1888 Apr. 9, 1889	Do.
Pugh, Miss India A	West Virginia	Interior	600	May 9, 1889				Do.
Purman, Miss Minerva M	Wisconsin	War	480	Nov. 17, 1888	May 17, 1889	600	Feb. 16, 1889	Do.

TABLE 38.—*Showing the names of those appointed in the Bureau of Engraving and Printing (Treasury Department), to the grade of printer's assistant (appointments to which grade are not charged to any apportionment), during the year ended June 30, 1889, together with the changes in the status or grade of such persons occurring during that period.*

Name.	Probationary appointment.	Absolute appointment.	Promoted.	
			To—	Date.
McGlue, Beulah E[1]	Dec. 29, 1888			
Reed, Helen S	....do	June 28, 1889		
Howard, Mary A[2]	Dec. 5, 1888			
Modcraft, Mrs. Isabella	....do	June 5, 1889	[3]$2039	June 8, 1889
Donnelly, Emma H	Dec. 29, 1888	June 30, 1889		
Miller, Estelle V	Dec. 6, 1888	June 6, 1889		
Reeder, Minnie S	Dec. 5, 1888	June 5, 1889		
Cartner, Mary A	....do	....do		
Buckingham, Eliza	....do	....do		
Mockabee, Adelia	Dec. 6, 1888	June 6, 1889		
Corner, Mollie M	Dec. 22, 1888	June 1, 1889		
Cullen, Katie C	Dec. 5, 1888	June 5, 1889		
Crippen, Hattie E	Dec. 28, 1888	June 28, 1889		
Huneke, Theresa	Dec. 5, 1888	June 5, 1889		
Howell, Grace[4]	Dec. 28, 1888			
Miller, Laura A	Jan. 14, 1889			
Lyons, Mary C	....do			
O'Donnell, Maggie	Jan. 19, 1889			
Doyle, Mary E	Jan. 17, 1889			
Emmons, Sadie E	....do			
Tennant, Sallie M	Jan. 21, 1889			
Womersley, Esther E	Jan. 14, 1889			
Robinson, Lizzie I	....do			
Willis, Lizzie A	....do			
Hall, Florence B	Jan. 16, 1889			
Hill, Sallie J	Jan. 24, 1889			
Doherty, Virginia D	Jan. 31, 1889			
Colman Fannie H	Feb. 8, 1889			
Roby, Bessie	Mar. 12, 1889			
Welty, Rhoda G	Mar. 1, 1889			
Moore, Elizabeth C	Mar. 11, 1889			
Mills, Margaret	Mar. 9, 1889			
Hicks, Katie J	Mar. 13, 1889			
Campbell, Mamie E	Mar. 18, 1889			
Harrington, Bridget A	....do			
Robertson, Margaret C	Mar. 14, 1889			
Frain, Mary A	Mar. 28, 1889			
Murphy, Clara M	Mar. 29, 1889			
Lewis, Virgie E	Apr. 1, 1889			
Rawlings, Ella V	May 2, 1889			
Ballman, Wilhelmina	....do			
Arnold, Addie M	May 3, 1889			
Mudd, Julia C	May 21, 1889			
Fuller, Minnie	June 2, 1889			
Hassett, Minnie A	June 20, 1889			
Lynch, Kate	June 19, 1889			
Mattfieldt, Lizzie	....do			
O'Dea, Nellie A	....do			
Greer, Ella B	....do			

[1] Resigned January 7, 1889.
[2] Resigned April 19, 1889.
[3] Transferred to Treasurer's Office.
[4] Resigned June 3, 1889.
[5] Separater.

Showing changes in grade or status of persons appointed prior to July 1, 1883. table 36, *ante* for changes as to those appointed during year ended June 30, 1889.

PROMOTIONS, DEPARTMENTAL SERVICE.

Name.	State.	Department.	From—	To—	Date.
red B. C	N. Y	Interior	$1,000	$1,800	May 7, 1889
lexander L	N. Y	War	1,200	1,400	Dec. 11, 1888
O	Md	Treasury	1,400	1,600	Aug. 1, 1888
ge N	Pa	do	1,600	1,800	Jan. 25, 1889
liam B	N. J	do	1,600	1,800	July 1, 1888
hn C	Ga	War	1,200	1,400	Mar. 28, 1889
William S.[1]	Miss	Interior			June 28, 1889
Miss Cora L	Dak	Treasury	1,000	1,200	July 14, 1888
W.[2]	Tex	Post-Office	1,400	1,600	Sept. 22, 1888
nk[3]	N. J	Interior	1,600	1,800	Oct. 15, 1888
s U.[4]	D. C	War	1,400	1,800	Sept. 20, 1888
rt P.[5]	N. J	Interior	1,600	1,800	Aug. 7, 1888
rry L.[3]	N. J	do	1,400	1,600	Oct. 15, 1888
Edmund T.[3]	Ky	do	1,000	1,400	Do.
harles D	Pa	Treasury	1,200	1,400	Mar. 14, 1889
iam J.[3]	Cal	Interior	1,200	1,400	Oct. 15, 1888
ward C.[3]	N. Y	do	1,200	1,600	Do.
mas W	Tex	Treasury	1,200	1,400	Sept. 13, 1888
iver J	S. C	do	1,400	1,600	July 24, 1888
hard M.[3]	Va	Interior	1,000	1,200	Oct. 15, 1888
mes H.[3]	Conn	do	1,000	1,400	Do.
lliam C	Tenn	do	1,000	1,200	Dec. 10, 1888
ac D	Pa	do	1,000	1,200	Do.
rles A	Minn	do	1,200	1,400	Dec. 16, 1888
illiam R.[7]	N. Y	do	1,200	1,400	June 19, 1889
	N. Y	do	1,200	1,400	June 5, 1889
, George W	Md	do	1,600	1,800	Sept. 1, 1888
ett M	Ky	do	1,200	1,400	Mar. 2, 1889
Miss Annie R	Va	Treasury	1,000	1,200	Aug. 1, 1888
William H. B	Iowa	Interior	1,400	1,600	Mar. 1, 1889
ley V	Pa	Treasury	1,200	1,400	Dec. 13, 1888
erham P	N. Y	Interior	1,200	1,400	May 10, 1889
George H	N. Y	do	1,200	1,400	Dec. 10, 1888
illiam R.[4]	N. H	do	1,600	1,800	Oct. 4, 1888
ohn F	Ill	do	1,200	1,400	Aug. 9, 1888
deric L	Mich	Treasury	1,200	1,400	Aug. 22, 1888
mes L	S. C	Interior	1,000	1,200	Dec. 10, 1888
rew D	Cal	do	1,200	1,400	Do.
a H	Ill	do	1,000	1,200	Aug. 9, 1888
a Emily L	N. Y	Treasury	900	1,000	Dec. 18, 1888
Gilbert	Pa	Interior	1,000	1,400	June 29, 1889
rt W.[8]	Minn	do	1,200	1,400	Dec. 1, 1888
lliam H.[8]	D. C	do	1,200	1,400	May 4, 1889
a Carrie	Nebr	Post-Office	720	900	July 19, 1888
man	N. Y	War	1,000	1,200	July 12, 1888
Vinson	Tex	Interior	1,000	1,200	Feb 2, 1889
es I	Ky	Treasury	1,000	1,200	Dec. 21, 1888
ank B	Ohio	War	900	1,000	Nov. 9, 1888
F	N. Y	do	1,200	1,400	July 12, 1888
niel K	Iowa	do	1,000	1,200	Do.
illiam J.[9]	Pa	Justice	1,200	1,400	Do.
liam P	La	War	1,000	1,200	Do.
ard F	N. Y	Interior	1,200	1,400	Dec. 10, 1888
Charles L. D.[10]	N. J	Treasury	1,400	1,600	Jan. 26, 1889
omas Q	La	Post-Office	1,400	1,600	Sept. 30, 1888
indley S	Ark	Interior	1,400	1,600	Feb. 1, 1889
chlin	N. Y	Interior	1,400	1,600	Aug. 9, 1888
rbert J	N. C	Post-Office	1,000	1,200	July 19, 1889
Miss Cynthia E.[10]	Dak	Treasury	1,200	1,400	July 24, 1888
a L.[10]	Va	do	1,200	1,400	Sept. 1, 1888
ra B	Oregon	do	1,200	1,400	Oct. 25, 1888
Miss Minette	Mass	Interior	1,000	1,200	Dec. 27, 1888
nder P	D. C	do	1,400	1,600	Apr. 25, 1889
s Lizzie M	Vt	Post-Office	900	1,000	Nov. 10, 1888
arles K	N. Y	do	1,200	1,400	Mar. 2, 1889
el A	Ind	Interior	1,400	1,600	Feb. 1, 1889
s R.[11]	D. C	Treasury	1,200	1,400	Aug. 18, 1888
s Katherine	Ohio	Post-Office	900	1,000	July 19, 1888
fra. Gay[12]	Ind	Interior	1,000	1,200	Jan. 22, 1889
John S	N. C	Treasury	1,400	1,800	Sept. 1, 1888
ll H	Ark	Post-Office	1,000	1,200	Oct. 3, 1888
s Rosa C.[12]	D. C	Interior	720	900	Sept. 22, 1888

00, to special pension examiner, $1,400.
ip Nolan.
topographer, Geological Survey.
er and reviser.
examiner, Patent Office.
nsion examiner.

[8] Type-writer.
[9] Telegrapher.
[10] Law.
[11] Book-keeper.
[12] Examiner's clerk, pension office

TABLE 39.—*Showing changes in grade or status of persons appointed, etc.*—Co

PROMOTIONS, DEPARTMENTAL SERVICE—Continued.

Name.	State.	Department.	From—	To—	
Faris, John M	Ind	Post-Office	$1,200	$1,400	Oc
McNeil, William H	Tex	Treasury	1,000	1,200	Ja
Fairfax, William McN.[8]	N. Y	Interior	1,200	1,400	Au
Carmer, Herman A.[1]	N. Y	Treasury	1,200	1,400	Oc
Hillyer, jr., Shaler G	Ga	do	1,000	1,200	Se
Todd, Mrs. Carrie E	Ark	Interior	1,000	1,200	Au
Lovejoy, Mrs. Mildred[2]	Miss	Post-Office	900	1,000	Au
Tomlin, Robert L	Mo	Interior	1,400	1,600	Au
Strong, Charles B	Ark	do	900	1,000	
			1,000	1,200	Ma
Pumphrey, Miss Carrie B.[3]	Md	Treasury	900	1,200	Ap
Jones, Frederick[9]	Ind	Interior			Ju
Sawyer, John F	Minn	Post-Office	720	1,200	Se
Williams, Charles[4]	Ky	Treasury	1,400	1,600	Oc
Norton, Miss Lillian A	Tex	Post-Office	900	1,000	Ju
Wistar, George H.[4]	Pa	Treasury	1,600	1,800	No
Anderson, Joseph W	Wash	Interior	1,000	1,200	Oc
Blakeney, Thomas C.[1]	Tenn	Treasury	1,400	1,600	Ju
Sweeney, Terence H	Minn	do	1,400	1,600	Au
Kendall, Mrs. Florence H	Nebr	Post-Office	1,000	1,200	Ju
Johnston, Miss Carrie M.[10]	Ill	Interior	900	1,000	De
Castle, Miss Elizabeth F.[10]	N. Y	do	1,000	1,200	Ja
McClelland, Miss Lizzie J.[10]	Tenn	do	900	1,200	Se
Howgate, Miss Ida	Mich	Treasury	900	1,000	Ma
Haskell, Porter D.[5]	Mich	Interior	1,400	1,600	Au
Fisher, Samuel T.[5]	Mass	do	1,400	1,600	Oc
Korn, Louis L	N. J	Post-Office	900	1,000	Ju
Peterson, Miss Antoinette F	N. Y	do	720	900	
Brickenstein, John H.[5]	N. J	Interior	1,400	1,600	Ap
Simpson, George R.[5]	Iowa	do	1,400	1,600	Au
Stewart, Charles A	Va	Treasury	1,200	1,400	De
			1,400	1,600	Ma
MacDonald, Martin A	Mass	Post-Office	1,200	1,400	Ju
			1,400	1,600	Ma
McMillan, Samuel M	Iowa	do	1,000	1,200	Ja
Rogers, Robert F.[5]	Pa	Interior	1,600	1,800	Ju
Wood, William C	Kans	Post-Office	1,000	1,200	Ju
Fowler, Willis J.[6]	Ind	Treasury	900	1,800	Fe
Ruffin, Sterling	N. C	do	1,400	1,600	De
Pegues, Samuel W. E	Miss	Interior	1,200	1,400	Ju
Stevens, Nathaniel H.[7]	N. J	do	1,200	1,400	De
Stine, Andrew B.[4]	Pa	Treasury	1,200	1,400	Au
Bennett, James F.[11]	Mo	do	1,200	1,400	Oc
Cronkhite, Philander C.[8]	Ill	Interior	1,800	2,000	Ma
Gallagher, Patrick J	Pa	Treasury	1,200	1,400	Au
Babbitt, Kurnal R	Mich	Post Office	1,200	1,400	Ma
Van Hoy, William C.[1]	Mo	Interior	1,200	1,400	
Freeland, John J	Ind	do	1,200	1,400	De
Pulliam, Judson W	Ky	do	900	1,000	
Cowdon, James S	La	do	1,200	1,400	
Gatchell, William F.[4]	Ohio	Treasury	1,400	1,600	Au
Harmon, Miss Emma L.[10]	Mich	Interior	900	1,200	Se
Decker, Delbert H.[5]	N. Y	do	1,200	1,400	Ap
Schmidt, John H. W	Ohio	do	1,000	1,200	Se
Fletcher, Frank A.[6]	Iowa	do			Ju
Carr, Wesley G.[5]	N. H	do	1,200	1,400	Ju
O'Reilly, Thomas	Pa	do	1,000	1,200	Ju
			1,200	1,400	De
Koonce, George W.[4]	N. C	War	1,400	1,600	Ju
Gary, Caesar R	Tex	do	1,000	1,200	No
Mattingly, Robert E.[3]	D. C	Interior	900	1,000	Se
			1,000	1,200	Ju
Durbin, William W	Ohio	Treasury	1,200	1,400	Oc
Swearingen, Henry H	Ga	Interior	1,200	1,400	Au
Daniel, Zadok T	Ala	War	1,000	1,200	Ju
Cracraft, Miss Julia	W. Va	Treasury	900	1,200	No
Gibson, jr., Horatio G	Ky	War	1,000	1,200	Oc
Waring, Luther H.[3]	Pa	Interior	1,000	1,200	Fe
Lane, Charles H.[5]	Mich	do	1,400	1,600	Ju
Mehn, William	La	War	1,000	1,200	Ju
Shafer, Elias	Mich	Interior	1,000	1,200	De
Smith, Miss Emma R	Nebr	do	900	1,000	Ja
Groseclose, Charles J.[4]	Va	do	1,000	1,200	De
Lachmeyer, Mrs. Phoebe J	N. Y	Treasury	900	1,000	Fe

[1] Law.
[2] *Nee* Forsythe.
[3] Type-writer.
[4] Book-keeper.
[5] Assistant examiner, Patent Office.
[6] Proof-reader.
[7] Special pension examiner, Pensio
[8] Principal pension examiner.
[9] From clerk, $1,400 to special exami
[10] Examiner's clerk.
[11] Assistant curator.

TABLE 39.—*Showing changes in grade or status of persons appointed, etc.*—Continued.

PROMOTIONS, DEPARTMENTAL SERVICE—Continued.

Name.	State.	Department.	From—	To—	Date.
Briscoe, Arthur	Mo	Post-Office	$1,400	$1,600	July 25, 1888
Jordan, Mrs. Mary A.[9]	Tex	Interior	840	900	May 17, 1889
Maddox, R. Lee	Ky	Post-Office	1,000	1,200	Mar. 2, 1889
Hopkins, Miss Emma L	Cal	Interior	900	1,000	Mar. 1, 1889
Hanger, G. Wallace W	Miss	do	1,200	1,600	Oct. 12, 1888
Poulson, Andrew J.[1]	Mo	do	900	1,400	Jan. 1, 1889
Lyon, Miss Eva M	Nebr	do	900	1,000	Dec. 10, 1888
Wilcox, Miss Mary R	D. C	do	900	1,000	Feb. 16, 1889
Hepburn, Miss Fannie N	D. C	War	720	840	Nov. 26, 1888
			840	900	Feb. 16, 1889
Hereas, Miss Alice T	D. C	do	720	840	Feb. 26, 1889
			840	900	Apr. 6, 1889
Neyhart, Miss A. Grace	Pa	do	600	720	Nov. 26, 1888
			720	840	Apr. 22, 1889
Hodges, Charles R	Tex	Post-Office	1,000	1,200	July 25, 1888
Street, Harlow R	Cal	War	1,000	1,200	July 27, 1888
Payne, Eugene B	Ill	Interior	1,400	1,600	Dec. 10, 1888
Ward, Miss Mabel	Ind	Treasury	900	1,200	Oct. 3, 1888
Ward, Miss Lucy	Ind	Interior	900	1,000	Dec. 1, 1888
McLaughlin, Aaron E	Ohio	do	1,200	1,400	July 16, 1888
Turpin, Miss Sallie H.[1]	Ohio	Treasury	900	1,000	Mar. 13, 1889
Merrick, George R.[2]	Conn	do	1,200	1,400	Sept. 1, 1888
McMonagle, Neil	Pa	Interior	900	1,000	Dec. 10, 1888
Robinson, Alfred N.[3]	Ohio	Treasury	1,200	1,400	Oct. 20, 1888
Whitcomb, Thomas G	Me	Interior	1,000	1,200	Dec. 10, 1888
Tilton, Joel A	N. J	do	900	1,000	Jan. 4, 1889
Roberts, James O'C	Ala	do	1,000	1,200	Dec. 10, 1888
Wilson, William	N. Y	do	1,000	1,200	July 16, 1888
Andrews, Miss Ollie L	Ga	do	900	1,000	Dec. 10, 1888
Stout, Miss Mayrie E.[2]	Ill	War	1,000	1,200	May 4, 1889
Treanor, John[3]	N. Y	Treasury	1,200	1,400	Nov. 28, 1888
Tolson, Miss Henrie W.[3]	Miss	Interior	1,000	1,200	Mar. 1, 1889
Sullivan, John T.[9]	D. C	do	900	1,200	Sept. 22, 1888
Gutz, George H.[4]	N. Y	War	1,200	1,400	July 1, 1888
Moler Henry H.[5]	Ill	Interior	1,400	1,600	Feb. 1, 1889
Anderson, T. Hart[6]	D. C	do	900	1,200	Oct. 27, 1888
Hurley, Daniel	N. Y	Treasury	1,200	1,400	Oct. 1, 1888
Dolan, Patrick V.[6]	W. Va	do	1,200	1,400	Feb. 26, 1889
Whitehead, Mortimer	N. J	Interior	900	1,000	Dec. 10, 1888
Wedderburn, George C.[5]	Md	do	900	1,000	Sept. 22, 1888
			1,000	1,200	May 10, 1889
Smith, Mrs. Isabella P	Mo	do	900	1,000	Dec. 24, 1888
			1,000	1,400	May 21, 1889
Blanchard, Dawson A.[3]	La	do	1,000	1,200	Jan. 22, 1889
Kelcher, Mrs. Fannie R	N. Y	do	900	1,000	June 18, 1889
Hayden, Miss Jennie A	N. Y	do	1,000	1,200	Dec. 10, 1888
Kaltack, Lewis A	Pa	do	840	1,000	July 17, 1888
Harlan, Burns	Md	do	900	1,000	June 4, 1889
Gulentz, Charles	Pa	Post-Office	1,000	1,200	Aug. 3, 1888
Byrne, Francis J.[7]	N. Y	Treasury	1,000	1,200	Oct. 18, 1888
Jonas, jr., Charles H	La	Interior	1,200	1,400	Dec. 10, 1888
Williams, Miss Lucy L.[3]	Ind	do	1,000	1,200	Mar. 1, 1889
Haskell, Ulysses G	Mass	do	1,000	1,200	Dec. 10, 1888
Thurmond, Miss Sophia D	Md	do	720	1,200	June 6, 1889
Rothrock, Henry C.[3]	N. C	Post-Office	1,000	1,200	July 19, 1888
McCoy, Joseph S.[3]	N. J	Treasury	1,200		Feb. 8, 1889
Schott, Gerhardus J	Ark	Interior	900	1,200	July 16, 1888
Spangler, Albert D	Pa	do	900	1,000	Aug. 15, 1888
Keagan, Miss Mary M.[3]	Pa	do	900	1,000	Sept. 1, 1888
Pierce, Edward W	Mich	do	1,000	1,200	Do.
Keigwin, Charles A.[6]	Ind	do	1,200	1,400	Aug. 9, 1888
Wade, Thomas M.[3]	Va	Treasury	1,200	1,400	Aug. 24, 1888
Woodson, William H.[3]	Va	do	1,000	1,200	Oct. 20, 1888
Taylor, Miss Elise K	Mo	do	900	1,200	Feb. 4, 1889
Stauffer, Charles C.[6]	Pa	Interior	1,200	1,400	June 27, 1889
Lower, Mrs. Florence	D. C	War	600	720	Oct. 25, 1888
			720	840	Apr. 6, 1889
			840	900	Apr. 22, 1889
Mulligan, Miss Emma M	D. C	do	600	720	Feb. 16, 1889
			720	840	Mar. 21, 1889
			840	900	Apr. 9, 1889
Diehl, Miss Geneva B	Pa	do	600	720	Nov. 9, 1888
			720	840	Apr. 9, 1889
			840	900	June 1, 1889

[1] Special pension examiner, Pension Office.
[2] Type-writer.
[3] Book-keeper.
[4] Telegrapher.
[5] Assistant examiner, Patent Office.
[6] Law.
[7] Stenographer.
[8] Government actuary, class 5.
[9] Examiner's clerk.

TABLE 39.—*Showing changes in grade or status of persons appointed, etc.*—C

PROMOTIONS, DEPARTMENTAL SERVICE—Continued.

Name.	State.	Department.	From—	To—	
Buckley, John D	Wis	Interior	$900	$1,000	De
Warner, Horace E	Iowa	do	900	1,000	De
Lineaweaver, Harry E[1]	Pa	do	1,000	1,200	Fe
			1,200	1,400	Ap
Don, Mary J	N. Y	do	900	1,000	De
Luff, Miss Emma H[2]	Del	Treasury	1,000	1,200	No
Nichols, John B	N. Y	War	1,000	1,200	Sep
Given, Charles A[2]	Va	Treasury	1,200	1,400	Au
Buell, Herbert L	N. Y	War	1,000	1,200	Sep
Shepard, Ernest L[3]	Mich	Treasury	900	1,200	Fe
Harmon, Eugene M[4]	Ohio	Interior	1,200	1,400	Au
			1,400	1,600	Jun
Webster, William G	Iowa	do	1,000	1,200	Jun
Goddard, Miss Fannie P	N. Y	Treasury	900	1,000	Au
Fort, William F[5]	N. Y	Interior	1,200	1,400	Dec
Henry, Miss May[6]	Miss	do	900	1,000	Jul
			1,000	1,200	Jan
Williams, Miss M. Louise[6]	N. Y	do	900	1,000	Dec
Wilkinson, Alfred D	Pa	do	1,200	1,400	Sep
Russell, Miss Annie A[6]	Va	do	900	1,000	Dec
Hill, Norman N	Ohio	do	1,000	1,200	Dec
Briggs, Oliver H	Ga	Post-Office	900	1,000	Jul
Frasier, Robert T[6]	Tenn	Interior	1,200	1,400	Oct
Lescallett, David[3]	Colo	do	1,000	1,200	Au
			1,200	1,400	Feb
Summers, Milo C	Ill	War	1,000	1,200	Jul
Voss, Otto	La	do	1,000	1,200	
Hamilton, Stephen F	N. J	do	1,000	1,200	Jun
Henry, Edwin S	Kans	do	1,000	1,200	Sep
Rose, George B	Ind	Treasury	1,000	1,200	Apr
Woods, William J[1]	Va	Post-Office	1,000	1,200	Sep
Rulla, Charles D	Mo	War	1,000	1,200	Sep
Hammond, George H	Minn	do	1,000	1,200	Oct
Darrah, Austin A	R. I	do	1,000	1,200	Dec
Harries, William A	Idaho	Interior	720	800	Jul
			800	900	Jun
Haller, William	N. Y	War	1,000	1,200	Nov
Coloman, Robert S[3]	Va	Interior	1,000	1,200	Sep
Abbott, Carl	N. H	War	1,000	1,200	Jul
Barnes, B. Frank[1]	N. J	Post-Office	900	1,000	Ma
Goodall, Henry S	Vt	War	900	1,000	Oct
			1,000	1,200	Feb
Cullen, Joseph P[2]	Ark	Treasury	1,000	1,200	Au
Copland, Miss Virginia I[6]	La	Interior	900	1,000	Dec
Scribner, Mrs. Hattie L[6]	Ill	do	900	1,000	Jan
McCullough, Frisby H[7]	Mo	do	1,000	1,200	Dec
Cooper, Miss Mary M[6]	Va	do	900	1,000	Jun
Dudley, Arthur S	Wis	do	1,000	1,200	Sep
			1,200	1,400	Dec
Pudney, Miss Belle[2]	Ind	do	900	1,000	Dec
Culbertson, John N	Dak	do	1,000	1,200	Au
Cuthbert, Miss Eugenia	Mo	do	900	1,000	Jan
			1,000	1,200	Jun
Townshend, Mrs. Rosa L	N. Y	do	900	1,000	Ma
Marshall, William G[3]	Tenn	do	1,600	1,800	Dec
Middleton, Miss Louise	Ill	do	900	1,000	Au
Morse, Charles E.[10]	Pa	do	720	1,400	Oct
			1,400	1,800	Ma
White, William Warren	N. Y	do	1,000	1,200	Dec
Foster, Warren W	Conn	do	1,000	1,200	
Montgomery, James W	Ky	do	1,000	1,200	Ma
Lawrence, Miss Margaret	Ind	do	1,200	1,400	Jan
Hunter, Andrew J	Mo	do	1,000	1,200	Jul
Westfall, Harry M[2]	Ill	do	1,200	1,400	Jan
Woolf, Oliver P[8]	Ohio	Treasury	1,000	1,200	Au
Pierson, Mrs. Elizabeth G[9]	La	Interior	1,000	1,200	Au
Hitchcock, Thomas D	Iowa	War	1,000	1,200	Ap
Brumbiay, George R	Ind	Interior	1,000	1,200	De
Gardner, Alva L[2]	Ill	Post-Office	900	1,000	Jul
King, William R[7]	Ohio	Agriculture	720	840	Jul
Watkins, Thomas W	Tenn	Interior	1,000	1,200	Ma
Barksdale, William H	Tex	Treasury	1,000	1,200	Oc
Carter, Jefferson W	Ga	War	1,000	1,200	No
Ives, Norman E	Iowa	Interior	1,000	1,200	Ju
			1,200	1,400	De
Ruenzler, Frederick[8]	Pa	War	1,000	1,200	De

[1] Stenographer and type-writer.
[2] Book-keeper.
[3] Law.
[4] Assistant examiner, Patent Office.
[5] Special pension examiner.
[6] Type-writer.
[7] Assistant curator.
[8] French and German.
[9] French.
[10] Disbursing clerk.

TABLE 39.—*Showing changes in grade or status of persons appointed, etc.*—Continued.

PROMOTIONS, DEPARTMENTAL SERVICE—Continued.

Name.	State.	Department.	From—	To—	Date.
Loveloy, Newton B[1]	Mass	Interior	[2]$2	$900	Sept. 22, 1888
Judd, Oscar M[2]	Ohio	Treasury	1,200	1,400	Aug. 4, 1888
Uline, George W	Ohio	Interior	1,000	1,200	Dec. 10, 1888
Wheelwright, Miss Nellie H[1]	W. Va	do	900	1,000	Jan. 22, 1889
Whipple, Ulysses V	Ga	Treasury	900	1,000	Apr. 10, 1889
Yelverton, John D[3]	Ala	Interior	900	1,000	Oct. 10, 1888
Coller, Jacob[3]	Pa	do	900	1,000	Dec. 1, 1888
Duane, Louis[3]	Pa	Treasury	900	1,000	Sept 1, 1888
Stevenson, Faber[3]	Ohio	do	1,400	1,600	Nov. 28, 1888
Etty, Robert A	Ohio	Interior	1,000	1,200	Dec. 10, 1888
McKennie, Miss Hetty B[1]	Va	do	900	1,000	Dec. 1, 1888
Pudney, James H[3]	Ind	Treasury	1,000	1,200	Feb. 21, 1889
Cooley, Frederick A	Ga	War	1,000	1,200	June 5, 1889
Douglas, William B[3]	Ind	Interior	1,000	1,200	Oct. 2, 1888
			1,200	1,400	Dec 26, 1888
Hoadley, James E[3]	N. Y	do	900	1,000	Aug. 9, 1888
			1,000	1,200	Feb. 1, 1889
Trapier, Richard S[4]	N. C	Interior	900	1,000	Dec. 10, 1888
Webster, Nelson P[4]	N. Y	War	1,000	1,200	Jan. 12, 1889
Jones, Charles C	Ala	do	1,000	1,200	Nov. 10, 1888
Taylor, William C[3]	Mo	Interior	1,000	1,200	Jan. 1, 1889
Cone, Charles D[3]	Ill	Treasury	900	1,200	Dec. 19, 1888
Wood, Miss Eleanor	Tex	War	480	600	Oct. 25, 1888
			600	720	Nov. 13, 1888
			720	840	Feb. 16, 1889
			840	900	Mar. 21, 1889
Cole, James[3]	N. Y	Interior	900	1,000	Aug. 9, 1888
			1,000	1,200	Mar. 1, 1889
Nixon, Miss Edith C	Ky	War	480	600	Nov. 9, 1888
			600	720	Feb. 16, 1889
Williams, John E[4]	N. H	Civil Service Commission.	900	1,000	July 12, 1888
Culver, Frank E[1]	N. Y	do	840	900	July 12, 1888
McReynolds, Mrs. Mary B[3]	Ind	Treasury	1,000	1,200	Dec. 8, 1888
Jacobs, Miss Ella M	Pa	War	480	600	Nov. 13, 1888
			600	720	Feb. 20, 1889
March, Charles A[4]	Ill	Interior	900	1,000	Dec. 10, 1888
Arthur, David F[3]	S. C	do	[3]3	1,000	Dec. 31, 1888
Hinton, John H[5]	Mo	do	[3]3	900	Oct. 25, 1888
Dye, Miss Susan E[3]	Iowa	do	900	1,000	Dec. 16, 1888
Moler, James D[3]	W. Va	Post-Office	1,000	1,200	Sept. 8, 1888

REDUCTIONS, DEPARTMENTAL SERVICE.

Jenkins, Charles E[7]	N. Y	Interior	1,600	1,400	June 20, 1889
Kennelly, James	Ohio	do	1,800	1,400	Aug. 15, 1888
Rhodes, Miss Roberta[3]	Tenn	do	1,200	900	Apr. 27, 1889
Robertson, Mrs. Gay[3]	Ind	do	1,200	1,000	Apr. 15, 1889
Castle, Miss Elizabeth F[3]	N. Y	do	1,200	900	Apr. 27, 1889
Gentsch, Daniel C[8]	Ohio	do	2,000	1,400	Mar. 1, 1889
Northrop, George P[1]	S. C	Treasury	1,400	1,000	Feb. 28, 1889
Harmon, Miss Emma L[9]	Mich	Interior	1,200	900	Apr 27, 1889
Hopper, Mrs. Laura V[9]	Tex	do	900	720	Do.
Jordan, Mrs. Mary A	Tex	do	900	720	Do.
Payne, Eugene B[7]	Ill	do	1,600	1,400	May 16, 1889
Fort, William F[7]	N. Y	do	1,400	1,200	Mar. 1, 1889

[1] Type-writer.
[2] Per day.
[3] Book-keeper.
[4] Stenographer and type-writer.
[5] Law.
[6] French.
[7] Special pension examiner.
[8] Chief of division.
[9] Examiner's clerk.

TABLE 39.—*Showing changes in grade or status of persons appointed, etc.*—Co

RESIGNED, DEPARTMENTAL SERVICE.

Name.	State.	Department.	Grade.
Hoyt, Miss Mary F	Conn	Treasury	$1,000
Lewis, William H[1]	Kans	War	1,200
Dubuar, Charles L	Mich	do	1,200
Clement, Alfred B. C[1]	N. Y.	do	1,400
			1,000
Grandy, Albert S	N. C.	Treasury	1,200
Hughes, Arthur L	Ohio	Post-Office	1,200
Clark, Charles R	N. Y.	do	1,200
Hoyt, George B	Mass	War	1,200
Sprowls, James M	Iowa	Treasury	1,200
Wilder, Charles S	Mass	do	1,200
Case, James A	Mich	do	1,200
Fearn, Percy B	Tenn	Interior	1,000
Davis, Garrett M[1]	Ky	Treasury	1,400
Crandall, Seamore A	Minn	Interior	1,200
Lovering, Miss Annie	Ky	Treasury	900
Heald, William H	Del	do	1,600
Titcomb, George W	Me	War	1,200
Dent, Sidney H[1]	Tex	Treasury	1,200
Wiggins, J. Vinson[1]	Tex	War	1,000
Young, Edward J	La	Interior	1,400
Scribner, Frank L[2]	Pa	Agriculture	2,000
Graham, Edward J[3]	N. Y.	Treasury	1,800
Gray, William M[4]	Pa	War	1,200
Vail, Henry W[5]	Conn	Interior	1,400
Erdman, Adolph	Mo	do	1,600
Van Brunt, Rulif[6]	N. Y.	Post-Office	1,400
			1,400
Blevins, John A	Mo	do	1,600
Upham, George B[8]	Me	Interior	1,400
Smith, Miss Margaret L	Vt	Post-Office	900
Smith, George P[8]	Kans	Interior	1,400
Blodgett, George R[8]	Me	do	1,800
Ricks, James B	Ill	do	1,600
Sallee, Charles M[8]	Ky	do	1,400
Seitz, Nathaniel Z[8]	Pa	do	1,400
Shouse, James H[8]	Ind	do	1,400
Masi, Mrs. Kate E[6 12]	Mo	do	1,200
Scanlan, Charles M[1 8]	Wis	Treasury	1,400
Platt, Wilmer G	Ind	do	1,400
Aspern, Harry[8]	Ill	do	1,200
Collins, John W	Ark	Interior	900
Anderson, Joseph W[1]	Wash	War	1,200
Case, Miss Frank E[13]	Mich	Interior	900
Nance, Willie V	S. C.	Post-Office	900
Gallaher, Patrick J[1]	Pa	Treasury	1,400
Gentsch, Daniel C[8]	Ohio	Interior	1,400
Dickey, Miss Mercine E	Mass	Treasury	900
Campbell, Jesse M	Mo	Interior	1,000
Thompson, John M[7]	S. C.	do	1,200
Hopper, Mrs. Laura V[13]	Tex	do	720
Reynolds, Henry L[9]	Ill	do	1,200
Allen, Albert R	Iowa	Treasury	1,000
Kelm, Morris[1]	Va	Post-Office	900
Taylor, John G	Colo	Interior	1,400
Shaw, William B	Wis	War	1,200
Doty, Mrs. Amanda W[1]	N. Y.	Treasury	900
Lydston, James A[9]	Ill	Interior	1,800
Smith, Orlando C	Conn	War	1,000
Jordan, Llewellyn[1]	Miss	Post-Office	1,000
Stockett, John W[10]	Ill	War	1,200
Barrington, John S[11]	Ill	do	1,000
Vickery, William J	Ind	Interior	1,600
Johnson, Mrs. Lucretia E[1 11]	Md	do	1,000
Gulentz, Charles	Pa	Post-Office	1,200
Byrne, Francis J[1 12]	N. Y.	do	1,200
Dent, Louis A[1 14]	Me	War	1,200
		Treasury	1,200
Maine, Mrs. Lulu H[1]	R. I.	do	900
Fletcher, Miss Blanche R	Pa	War	480

[1] Resigned to accept appointment in another department.
[2] Assistant botanist.
[3] Law.
[4] Histology and microscopy.
[5] Special pension examiner.
[6] Now Mrs. Peed.
[7] Book-keeper.
[8] Assistant examiner, Patent C
[9] Medical examiner.
[10] Mechanical draughtsman.
[11] Type-writer.
[12] Stenographer.
[13] Examiner's clerk, Patent Offi
[14] Stenographer and typewriter

9.—*Showing changes in grade or status of persons appointed, etc.*—Continued.

RESIGNED, DEPARTMENTAL SERVICE—Continued.

Name.	State.	Department.	Grade.	Date.
iss Mary	Ky	Interior	$900	Aug. 31, 1888
John A	Ill	do	1,200	Apr. 25, 1889
n, Carl A	Mo	War	1,000	Dec. 17, 1888
Walter B[1]	Ky	do	1,200	Aug. 29, 1888
rank M	Mo	do	1,000	Sept. 23, 1888
, James C	Cal	do	1,200	Sept. 30, 1888
Edward M	Ark	do	1,000	Dec. 31, 1888
ohn E	S. C	do	1,000	Aug. 15, 1888
orge H	Vt	do	1,000	June 21, 1889
rence M[1 2]	N. J	do	1,000	Oct. 4, 1888
dwin S[1]	Kans	do	1,200	May 31, 1889
m, John R[1]	Me	do	1,000	Aug. 15, 1888
Henry S[1]	Vt	Treasury	900	Oct. 22, 1888
		War	1,200	May 28, 1889
Arthur S[1]	Wis	do	1,000	Sept. 21, 1888
Harry M[1 2]	Ill	Treasury	1,200	Jan. 16, 1889
Edward E[3]	Tex	do	1,200	Nov. 1, 1888
Cyrus V[4]	Ill	Interior	1,400	June 23, 1889
e, William H[1]	Tex	War	1,000	Oct. 8, 1888
ohn C[1]	Ill	do	1,000	May 31, 1889
ames[1]	Mich	do	1,000	Oct. 11, 1888
William B[1 2]	Ind	Treasury	1,000	Oct. 1, 1888
Herbert P	N. J	War	1,000	Sept. 18, 1888
obert W	Mo	do	1,000	Nov. 6, 1888
, John E[1 5]	N. H	Civil Service Commission.	1,000	Apr. —, 1889
ld, Thomas H	Cal	War	1,000	May 23, 1889
wis D	Ga	do	1,000	Mar. 7, 1889
lenry E[6]	N. Y	do	1,000	Apr. 15, 1889
illiam L	Ala	do	1,000	Aug. 10, 1888
Buel S[7]	Pa	Post-Office	900	Feb. 16, 1889

TRANSFERS, DEPARTMENTAL SERVICE.

Name.	State.	From—	To—	Grade.	Date.
William H	Kans	War	Interior	$1,200	Oct. 11, 1888
, Alfred B. C	N. Y	do	do	1,800	May 7, 1889
d, William H	Iowa	Treasury	do	1,200	June 21, 1889
arrett M	Ky	do	do	1,200	Oct. 9, 1888
, J. Vinson	Tex	War	do	1,000	Sept. 26, 1888
nt, Rulif	N. Y	Post-Office	do	1,400	May 2, 1889
n, Joseph W	Wash	War	do	1,200	Oct. 2, 1888
r, Patrick J	Penn	Treasury	do	1,400	Aug. 20, 1888
orris	Va	Post-Office	Treasury	900	Feb. 4, 1889
rs. Amanda W	N. Y	Treasury	Interior	900	Apr. 19, 1889
, Mrs. Lucretia E[6]	Md	Interior	War	1,000	May 15, 1889
Francis J[8]	N. Y	Post-Office	Treasury	1,200	Oct. 18, 1888
ouis A[5]	Me	War	do	1,200	Oct. 15, 1888
Mrs. Lulu H	R. I	Treasury	Interior	900	Apr. 11, 1889
, Wilson S[8]	N. Y	do	Civil Service Commission.	1,600	July 12, 1888
larence M[2]	N. J	War	Interior	1,000	Oct. 20, 1888
ton, John R	Me	do	Treasury	1,000	Aug. 16, 1888
, Henry S	Vt	Treasury	War	1,000	Oct. 23, 1888
, Arthur S	Wis	War	Interior	1,200	Sept. 22, 1888
ll. Harry M[2]	Ill	Treasury	do	1,400	Jan. 17, 1889
ale, William H	Tex	War	Treasury	1,200	Oct. 9, 1888
John C	Ill	do	Interior	1,200	May 28, 1889
, William B[2]	Ind	Treasury	do	1,200	Oct. 2, 1888
, John E[2]	N. H	Civil Service Commission.	Treasury	1,000	Apr. 22, 1889

gned to accept appointment in another partment.
-keeper.

al examiner Pension Office.

[5] Stenography and type-writing.
[6] Type-writer.
[7] Examined under general rule 3, clause 2 (c).
[8] Stenography.

TABLE 39.—*Showing changes in grade or status of persons appointed, etc.*—(

DISCHARGED, DEPARTMENTAL SERVICE.

Name.	State.	Department.	Grade.
Kessler, George R	Ill	Interior	$1,600
Lloyd, Francis B	S. C	do	900
Meyerhardt, Louis	Ga	do	1,200
Fussell, Edwin N	Pa	Post-Office	1,200
Bridges, Walter S[1]	Ill	Interior	1,400
Cutler, Samuel M	Kans	do	1,400
Cannon, Charles W	Tex	do	1,600
Kiner, Samuel R	Ill	War	1,200
Whitehead, Charles[1]	Cal	Interior	1,400
Wilcox, Andrew D[1]	Tex	do	1,400
Peters, Ezra[1]	Ill	do	1,400
Britton, Oscar F[1]	Ill	do	1,400
Fawcett, Thomas R[1]	Ill	do	1,400
Davis, Crawford F[1]	Iowa	do	1,400
Barringer, Ernest A[1]	Ky	do	1,400
Davis, Samuel S[1]	Md	do	1,400
Steed, James B[1]	Ala	do	1,400
Henaley, Travis F[1]	Mo	do	1,400
Cox, William L[1]	Ind	do	1,400
Stocksiager, Thomas A[1]	Kans	do	1,400
Posey, Addison F[1]	Ala	do	1,400
Gallion, Emmett D[1]	Va	do	1,400
Lux, John[1]	N. Y	do	1,400
Thomas, Isaac C[1]	Pa	do	1,400
Fleming, George B[1]	Ind	do	1,400
Magee, Thomas N[1]	Pa	do	1,400
McGuire, William H[1]	Ind	do	1,400
Garrett, William C[1]	Ala	do	1,400
Austin, Frederick H[1]	Mo	do	1,400
Hoge, Romeo G[1]	Iowa	do	1,400
Townsend, John G[1]	Md	do	1,400
Lawrence, Lacy L[1]	Tenn	do	1,400
Wallace, James W[1]	Tenn	do	1,400
Knight, James G[1]	Wis	do	1,400
Bowne, Miss Rosa C[2]	D. C	do	900
McDaniel, Bailey P[1]	Ill	do	1,400
Claudy, Jacob M[1]	Pa	do	1,400
Cole, John C[1]	Del	do	1,400
Miller, Martin B[1]	Ind	do	1,400
Snyder, Henry W[1]	Tenn	do	1,400
Bennett, Thomas J[1]	Conn	do	1,400
Ray, John E. R[1]	Tenn	do	1,400
Stiff, Henry C[1]	Ill	do	1,400
Andrews, Sullivan C[1]	Me	do	1,400
Perkins, Henry E[1]	Vt	do	1,400
Miller, George M[1]	Ky	do	1,400
Buskirk, Edward C[2]	Ind	do	2,000
Stevens, Nathaniel H[1]	N. J	do	1,400
McCarthy, Florence[1]	Ill	do	1,400
Cronkhite, Philander C[2]	Ill	do	2,000
Myers, Abram[1]	Ill	do	1,400
Birdseye, Mortimer B[1]	N. Y	do	1,400
Owen, McHenry[1]	Ind	do	1,400
Darling, Frank I[1]	Ill	do	1,400
Robertson, Marcus W[1]	N. C	do	1,400
Jones, Algernon S	N. C	do	1,200
Kelly, William C	Tenn	do	1,200
Lesher, William	Kans	do	1,000
Chase, Fessenden N	Me	War	1,000
Stanton, Lemuel J[1]	Iowa	Interior	1,400
St. John, jr., Charles J[1]	Tenn	do	1,400
Schaden, Peter W[1]	Ohio	do	1,400
McGee, John M[1]	Ind	do	1,400
Smith, Marion[1]	Miss	do	1,400
Broocke, William L[1]	Oregon	do	1,400
Garrison, Ethridge J[1]	Ala	do	1,400
Carusi, Samuel P[1]	Cal	do	1,400
Orer, Madison[1]	Ohio	do	1,400
Kinkade, John H[1]	Ohio	do	1,400
McClelland, Frank[1]	Ind	do	1,400
Comly, Richard W[2]	Wis	Treasury	900
Ladd, Alanson B	Kans	Interior	900
Crutchfield, George A[1]	Tex	do	1,400
Tanner, George W[1]	Ill	do	1,400
Wilson, Posey S[4]	Colo	do	1,200
Houser, Joseph	Ill	do	1,200

[1] Special pension examiner.
[2] Principal pension examiner.
[3] *Stenographer* and type-writer.
[4] Book-keeper.
[5] Examiner's clerk.

TABLE 39.—*Showing changes in grade or status of persons appointed, etc.*—Continued.

DISCHARGED, DEPARTMENTAL SERVICE—Continued.

Name.	State.	Department.	Grade.	Date.
Stout, John P[1]	Ohio	Interior	$1,400	May 5, 1888
Swaim, George M[1]	Iowa	....do	1,400	June 30, 1889
Lontz, John M[1]	Ind	....do	1,400	Do.
Jones, Alvah W[1]	Minn	....do	1,400	Dec. 15, 1888
Farrar, Orris W[1]	N. H	....do	1,400	June 30, 1889
Mahan, John H[1]	Ill	....do	1,400	Do.
Downey, Samuel R[1]	Ind	....do	1,400	Do.
Ragsdale, William M	Ky	....do	1,000	Apr. 25, 1889
Kern, Frederick W	Ohio	....do	1,200	May 20, 1889
Conklin, Arthur H[2]	N. Y	....do	1,000	June 15, 1889
Harnsberger, William H[1]	Ill	....do	1,400	June 30, 1889
Sullivan, Clement[1]	Miss	....do	1,400	Apr. 30, 1889
Smith, Ephraim J[1]	Ind	....do	1,400	Apr. 15, 1889
Bucklrk, Thomas B[1]	Ind	....do	1,400	Dec. 10, 1888
Limbach, Joseph[1]	Ohio	....do	1,400	May 20, 1889
Morrison, William Taylor	Ky	War	1,000	Dec. 15, 1888

RE-INSTATED, DEPARTMENTAL SERVICE.

Clement, Alfred B. C	N. Y	War	1,000	Oct. 23, 1888
Hoyt, George B	Mass	....do	1,200	Apr. 2, 1889
Giles, Arthur H	N. Y	Treasury	1,400	July 5, 1888
Sprowls, James M	Iowa	....do	1,400	Apr. 4, 1889
Richardson, Edwin J	Ind	Interior	1,400	Apr. 10, 1889
Patten, Hugh N	Ohio	....do	1,400	May 7, 1889
Cutler, Samuel M	Kans	....do	1,000	Mar. 18, 1889
Page, William R[1]	Ohio	....do	1,400	Sept. 25, 1888
Childs, Miss Carrie	Nebr	Post-Office	720	July 12, 1888
Magee, Thomas N[1]	Pa	Interior	1,400	Jan. 23, 1889
Gorgas, Richard H	Ala	War	1,400	Sept. 23, 1888
McNiel, William H	Tex	Treasury	1,000	Oct. 15, 1888
Sawyer, John F	Minn	Post-Office	720	July 20, 1888
Cronkhite, Philander C	Ill	Interior	2,000	June 22, 1889
Kelly, Mrs. Mary T[3]	Ind	....do	900	Dec. 3, 1888
Stratton, Edward M	Ark	War	1,000	July 30, 1888
Tierney, Matthew	Fla	Interior	1,200	June 10, 1889
Conklin, Arthur H[2]	N. Y	....do	1,000	June 29, 1889
Morrison, William Taylor	Ky	War	1,000	Jan. 17, 1889

DIED, DEPARTMENTAL SERVICE.

Guthrie, James	Ind	Interior	1,200	Nov. 18, 1888
Hirst, James E	Pa	War	1,000	Oct. 12, 1888
McCaine, William T	Mo	Interior	1,200	Nov. 1, 1888
Bennett, Miss Martha L[3]	Iowa	Treasury	1,000	Oct. 10, 1888
Elder, John A[1]	Mich	Interior	1,400	Apr. 10, 1889
Smith, Robert T	Md	....do	1,400	May 20, 1889
Cooke, William L	Pa	....do	1,200	June 25, 1889
Gans, Phineas	W. Va	....do	1,200	Apr. 12, 1889
Cooke, Mrs. Allie C	Ala	....do	1,200	Apr. 4, 1889
Rose, Marcus A	Ill	....do	1,000	Mar. 31, 1889
Barnard, George B	D. C	....do	1,400	May 31, 1889
Desmond, Charles	Mass	....do	1,800	Apr. 2, 1889

[1] Special pension examiner. [2] Book-keeper. [3] Now Mrs. Palmer.

NUMBER OF CERTIFICATES FOR REINSTATEMENTS UNDER DEPARTMENTAL RULE X, ISSUED FROM JULY 1, 1888, TO JUNE 30, 1889.

Department.	Number where separation was within 1 year.	Number where separation was more than 1 year.*
Treasury	21	1
War	15	.....
Navy	1	.....
Post Office	10	1
Interior	50	4
Labor	1	.....
Total	98	6

* The amendment to the Rules abolishing the time limit for the reinstatement of soldiers and sailors of the war of the rebellion was promulgated June 19, 1889.

TABLE 40.—*Showing, by States, appointments made in the classified Railway Mail Service from May 1 to June 30, 1889, inclusive.*

States.	No.	States.	No.
Alabama	1	Nebraska	7
Arkansas	3	New Mexico	1
California	6	New York	11
Colorado	4	Ohio	13
Connecticut	2	Oregon	4
Dakota	2	Pennsylvania	7
Illinois	5	Tennessee	4
Indiana	6	Texas	11
Iowa	3	Virginia	1
Kansas	2	Washington	5
Kentucky	5	West Virginia	1
Maine	1	Wisconsin	1
Maryland	1	Wyoming	1
Minnesota	1		
Mississippi	1	Total	125
Missouri	15		

TABLE 41.—*Showing, by States, re-instatements made in the classified Railway Mail Service from May 1 to June 30, 1889, inclusive.*

States.	No.	States.	No.
California	2	Minnesota	1
Colorado	1	Mississippi	4
Connecticut	2	Missouri	4
Dakota	1	Montana	2
District of Columbia	2	Nebraska	2
Florida	1	New Hampshire	2
Georgia	4	New Jersey	2
Idaho	1	New Mexico	1
Illinois	10	New York	17
Indiana	5	North Carolina	2
Iowa	6	Ohio	6
Kansas	12	Pennsylvania	6
Kentucky	1	South Carolina	1
Louisiana	2	Tennessee	2
Maine	3	Texas	1
Maryland	2	West Virginia	1
Massachusetts	2		
Michigan	6	Total	118

TABLE 42.—*Showing removals, resignations, etc., in the classified Railway Mail Service from May 1 to June 30, 1889, inclusive.*

	No.
Removals	33
Resignations	109
Expiration of appointment	34
Deaths	1
Total	177

TABLE 43.—*Showing appointments and separations, classified customs service, during the year ended June 30, 1889.*

Location of custom-house.	Appointments.																		
	Selected for appointment, but did not enter on duty.	Clerks.	Clerk and inspectress.	Clerk and storekeeper.	Inspectors.	Deputy collectors and inspectors.	Night inspectors.	Inspectresses.	Assistant weighers.	Examiners.	Storekeepers.	Openers and packers.	Samplers.	Teller.	Engineer.	Total.	Reinstatements.	Aggregate.
Baltimore, Md	....	2	....	....	4	....	7	....	5	....	2	....	....	....	1	21	1	22
Boston, Mass	....	2	1	....	5	....	7	....	4	1	2	....	....	....	....	22	6	28
Burlington, Vt	2	....	....	....	....	7	....	....	....	....	....	....	....	....	....	7	....	7
Chicago, Ill	....	1	....	....	4	....	....	....	....	....	1	....	....	....	....	6	7	13
Detroit, Mich	1	1	....	....	6	....	....	....	....	....	....	....	....	....	....	7	....	7
New Orleans, La	....	1	....	....	6	....	....	....	4	....	....	....	....	....	....	11	1	12
New York, N. Y	....	109	....	....	44	....	11	2	24	12	....	8	1	1	....	212	14	226
Philadelphia, Pa	1	3	....	....	8	....	....	....	2	1	....	....	....	....	....	14	....	14
Port Huron, Mich	....	....	....	....	1	....	....	....	....	....	....	....	....	....	....	1	....	1
Portland, Me	....	....	....	....	....	....	....	....	....	....	....	....	....	....	....	....	....	....
San Francisco, Cal	2	3	....	1	5	....	11	....	8	....	2	....	....	....	....	30	....	30
Total	6	122	1	1	83	7	36	2	47	14	7	8	1	1	1	331	29	360

Location of custom-house.	Separations during probation or rejected at end of probation.			Separations after absolute appointment.			Total.	Separation of persons who were appointed before examinations began.	Separated from excepted places, who were appointed since examinations began.
	Removed.	Resigned.	Died.	Removed.	Resigned.	Died.			
Baltimore, Md	.....	.....	.....	.....	1	.....	1	3	.....
Boston, Mass	.....	.....	.....	1	5	.....	6	5	1
Burlington, Vt	1	.....	.....	.....	.....	.....	1	4	.....
Chicago, Ill	.....	.....	.....	1	2	.....	3	.....	3
Detroit, Mich	.....	.....	.....	1	.....	.....	1	.....	.....
New Orleans, La	.....	1	.....	5	9	.....	15	1	3
New York, N. Y	.....	.....	.....	.....	.....	.....	*138	38	15
Philadelphia, Pa	.....	.....	.....	4	2	1	7	2	.....
Port Huron, Mich	.....	.....	.....	.....	.....	.....	.....	.....	.....
Portland, Me	.....	.....	.....	.....	.....	.....	.....	.....	.....
San Francisco, Cal	3	.....	.....	10	10	1	24	.....	3
Total	.....	.....	.....	.....	.....	.....	191	51	25

* Of this number 61 are removals; 50 are resignations; 22 are deaths. The commission is unable to give this information in further detail.

TABLE 44.—*Showing appointments and separations, classified postal service, for the year ended June 30, 1889.*[*]

Location of post-office.	Appointments.							
	Selected for appointment but did not enter on duty.	Clerks.		Pilots, stampers, messengers, etc.	Carriers.	Total.	Re-instatements.	Aggregate.
		Male.	Female.					
Albany, N. Y	5	.....	.....	.....	31	31	.....	31
Baltimore, Md	24	21	.....	.....	52	73	.....	73
Boston, Mass	23	68	1	11	114	194	2	196
Brooklyn, N. Y	3	27	.....	5	120	152	3	155
Buffalo, N. Y	2	16	.....	.....	24	40	.....	40
Chicago, Ill	68	97	4	48	67	216	29	245
Cincinnati, Ohio	17	1	.....	8	52	61	1	62
Cleveland, Ohio	6	4	.....	.....	29	33	7	40
Columbus, Ohio	2	1	.....	3	18	22	2	24
Denver, Colo	.....	8	1	.....	28	37	2	39
Des Moines, Iowa	3	8	.....	.....	6	14	1	15
Detroit, Mich	.....	1	1	7	16	25	.....	25
Hartford, Conn	.....	2	1	.....	7	10	.....	10
Indianapolis, Ind	1	10	.....	.....	21	31	14	45
Jersey City, N. J	.....	.....	1	.....	36	37	1	38
Kansas City, Mo	17	24	.....	.....	24	48	2	50
Los Angeles, Cal	.....	3	1	.....	9	13	2	15
Louisville, Ky	3	8	.....	.....	6	14	1	15
Milwaukee, Wis	4	1	.....	3	23	27	.....	27
Minneapolis, Minn	14	14	1	.....	18	33	.....	33
Newark, N. J	3	5	.....	.....	19	24	.....	24
New Haven, Conn	3	24	2	.....	28	54	.....	54
New Orleans, La	8	10	2	15	26	53	.....	53
New York, N. Y	110	189	.....	216	509	884	7	891
Oakland, Cal	3	.....	.....	.....	5	5	.....	5
Omaha, Nebr	.....	1	2	.....	19	22	.....	22
Philadelphia, Pa	115	131	3	.....	240	374	20	394
Pittsburgh, Pa	1	14	.....	.....	25	39	.....	39
Portland, Me	1	3	.....	.....	.....	3	3	6
Providence, R. I	11	2	.....	.....	10	12	.....	12
Richmond, Va	5	6	.....	.....	13	19	1	20
Rochester, N. Y	4	2	.....	.....	24	26	2	28
St. Louis, Mo	.....	6	.....	26	26	58	.....	58
St. Paul, Minn	4	6	1	3	19	29	.....	29
San Francisco, Cal	23	15	.....	.....	72	87	1	88
Syracuse, N. Y	7	10	.....	2	15	27	6	33
Toledo, Ohio	.....	4	.....	.....	12	16	.....	16
Troy, N. Y	6	11	.....	3	29	43	.....	43
Washington, D. C	2	21	1	.....	28	50	7	57
Worcester, Mass	.....	2	.....	.....	.....	2	.....	2
Total	496	746	22	350	1,820	2,938	114	3,052

[*] A statement of the numbers of officials at these offices will be found at page 247 post.

TABLE 44.—*Showing appointments and separations, classified postal service, for the year ended June 30, 1889*—Continued.

Location of post-office.	Separated during probation or rejected at end of probation.			Separated after absolute appointment.			Total.	Separated who were appointed before examinations began.	Separated from excepted places who were appointed since examinations began.
	Removals.	Resignations.	Deaths.	Removals.	Resignations.	Deaths.			
Albany, N. Y	1			3	2		6		1
Baltimore, Md	4	7		1	3		15		
Boston, Mass	5			22	31	6	64	2	5
Brooklyn, N. Y	5	6		16	17	3	47	9	
Buffalo, N. Y	6	9	1	3	8	1	28		
Chicago, Ill	9	32		83	69	5	198	3	84
Cincinnati, Ohio		3		4	8	1	16	14	9
Cleveland, Ohio				7	4	2	13		
Columbus, Ohio	2						2	12	
Denver, Colo	2	7		2	4		15	9	7
Des Moines, Iowa	2						2		
Detroit, Mich	1	6	1				8		
Hartford, Conn		1					1	3	
Indianapolis, Ind		1		1	7		9	2	10
Jersey City, N. J	4	2		1		1	8	2	3
Kansas City, Mo				2	16		18		
Los Angeles, Cal	3						3		5
Louisville, Ky				1	7		8	4	7
Milwaukee, Wis		1					1		
Minneapolis, Minn	1	1					2		1
Newark, N. J	3	4	1				8		1
New Haven, Conn	2	3					5		
New York, N. Y	130	67		57	67	8	329	62	
Oakland, Cal									5
Omaha, Nebr		3					3	2	3
Philadelphia, Pa	6	86	1	44	59	6	202	20	16
Pittsburgh, Pa				4	5		9		
Portland, Me								3	
Richmond, Va	1	4					5		
Rochester, N. Y		2					2	3	
St. Louis, Mo	3	5		1	2	1	12	11	2
St. Paul, Minn		2					2	1	1
San Francisco, Cal		10		5	21	1	37	10	
Syracuse, N. Y		5					5	12	
Toledo, Ohio		2					2	4	
Troy, N. Y				12			12	10	5
Washington, D. C	1	5					6	8	15
Worcester, Mass								2	
Total	191	274	4	269	330	35	1,103	208	180

TABLE 45.—*Showing, for all branches of the classified service, the number examined, the number who failed, and the per cent. of failures; the number who passed, the number appointed, and the per cent. of those that passed who were appointed during the several periods covered by the reports of the commission.*

	Examined.	Failed.	Per cent. of failures.	Passed.	Appointed.	Per cent. appointed of those that passed.
DEPARTMENTAL SERVICE.						
July 16, 1883, to January 15, 1884	784	325	41.5	459	48	10.5
January 16, 1884, to January 15, 1885	2,276	938	41.2	1,338	432	32.3
January 16, 1885, to January 15, 1886	1,754	716	40.8	1,038	239	23.0
January 16, 1886, to January 15, 1887	2,304	721	31.3	1,583	392	24.7
January 16, 1887, to June 30, 1887	2,023	629	31.1	1,394	155	11.1
July 1, 1887, to June 30, 1888	2,244	693	30.9	1,551	352	22.7
July 1, 1888, to June 30, 1889	3,697	1,515	41.0	2,182	387	17.7
Total	15,082	5,537	36.7	9,545	2,005	21.0
RAILWAY MAIL SERVICE.						
May 1, 1889, to June 30, 1889	2,236	434	19.4	1,802	125	6.9
CUSTOMS SERVICE.						
July 16, 1883, to January 15, 1884	817	351	43.0	466	69	14.8
January 16, 1884, to January 15, 1885	838	297	35.4	541	119	22.0
January 16, 1885, to January 15, 1886	1,735	692	39.9	1,043	169	16.2
January 16, 1886, to January 15, 1887	4,058	1,511	37.2	2,547	641	25.2
January 16, 1887, to June 30, 1887						
July 1, 1887, to June 30, 1888	2,479	979	39.5	1,500	340	22.7
July 1, 1888, to June 30, 1889	2,425	1,046	43.2	1,379	331	24.0
Total	12,352	4,876	39.5	7,476	1,669	22.3
POSTAL SERVICE.						
July 16, 1883, to January 15, 1884	1,941	822	42.3	1,119	372	33.2
January 16, 1884, to January 15, 1885	3,233	971	30.0	2,262	1,249	55.2
January 16, 1885, to January 15, 1886	4,113	1,160	28.2	2,953	1,473	49.9
January 16, 1886, to January 15, 1887	7,467	2,245	30.1	5,222	3,254	62.3
January 16, 1887, to June 30, 1887						
July 1, 1887, to June 30, 1888	6,103	2,471	40.5	3,632	1,924	53.0
July 1, 1888, to June 30, 1889	10,702	4,087	38.2	6,615	2,938	44.4
Total	33,559	11,756	35.0	21,803	11,210	51.4
SUMMARY.						
July 16, 1883, to January 15, 1884	3,542	1,498	42.3	2,044	489	23.9
January 16, 1884, to January 15, 1885	6,347	2,206	34.8	4,141	1,800	43.5
January 16, 1885, to January 15, 1886	7,602	2,568	33.8	5,034	1,881	37.4
January 16, 1886, to January 15, 1887	15,852	5,106	32.2	10,746	4,442	41.3
January 16, 1887, to June 30, 1887						
July 1, 1887, to June 30, 1888	10,826	4,143	38.3	6,683	2,616	39.1
July 1, 1888, to June 30, 1889	19,060	7,082	37.2	11,978	3,781	31.6
Total	63,229	22,603	35.8	40,626	15,009	37.0

NOTE.—The War Department is the only Department to which promotion regulations have been applied by the commission. No examinations under such regulations were, however, held during the year covered by this report. The following correction in the fifth report is made: An error occurred in Table No. 8, showing the results of promotion examinations in the War Department, which was printed in the body of the report. The recapitulation gives Signal Office—aggregate examined, 10; passed, 5; failed, 5. It should read: Aggregate, 12; passed, 8; failed, 4. Those who failed were a clerk who took the examination for promotion to the position of bibliographer and librarian, and three clerks who took the examination for promotion to the position of meteorological clerk. This would change the aggregate of the recapitulation to 1,015 examined, 954 passed, and 61 failed.

SPECIMEN EXAMINATION QUESTIONS.

NOTE.—There are four branches of the classified Civil Service, as follows:
1. The classified departmental service.
2. The classified customs service.
3. The classified postal service.
4. The classified railway mail service.

"No person who is an applicant for examination, or who is an eligible in one branch of the classified service, shall, at the same time, be an applicant for examination in any other branch of said service."

Any person may, however, be an applicant for examination, or an eligible for the position of clerk (or copyist), classified departmental service, and also an applicant for any one of the special examinations for departmental service, provided for by the Commission.

The specimen questions in this appendix are substituted for the questions printed in previous reports, and no other specimen questions can be furnished to applicants. It will be understood that the questions are different at each examination, but the following have been used, and in subject and grade are fair specimens of the whole.

The different subjects are weighted according to their relative importance in the examination. In determining the general average of a competitor the average on each subject is multiplied by the number indicating the relative weight of the subject, and the sum of these products, divided by the sum of the relative weights, gives the general average. The following is a form on the first sheet of the clerk examination giving the subjects in that examination and their relative weights, and illustrating the method of obtaining the general average after the average in each subject has been determined:

FIRST BRANCH OF CLASSIFIED SERVICE — DEPARTMENTAL SERVICE.

CLERK EXAMINATION (Series No. 20).

Subjects.	Averages.	Relative weights.	Products of averages multiplied by weights.
First: Orthography	85	2	170
Second: Penmanship	75	3	225
Third: Copying	90	3	270
Fourth: Letter-writing	75	3	225
Fifth: Elements of the English language	70	1	70
Sixth: Arithmetic	80	5	400
Seventh: Elements of book-keeping	85	2	170
Eighth: Elements of geography, history, and Government of the United States	75	1	75
Divide the sum of the products by the sum of relative weights	....	20	1,605
And the general average is ascertained to be	....	....	80.25

The figures above in the column headed "averages" are assumed averages, inserted to illustrate the method of obtaining the general average.

The time allowed for this examination is limited to seven consecutive hours.

FIRST SUBJECT.—*Orthography.*

Spelling is dictated by the Examiner. The words are written by the competitor in the blank spaces indicated on the first sheet of the examination.

The following is a list of twenty words used as a spelling exercise for the clerk and also for the copyist examination, Series 20.

The Examiner pronounces each word and gives its definition as printed below. The competitor is required to write ONLY THE WORD *and* NOT *its definition.*

1. *Speech.* An address; an oration.
2. *Impeach.* To accuse; to bring into question.
3. *Conceited.* Vain; opinionated.
4. *Seated.* Placed on a seat; fixed; settled.
5. *Dyeing.* The act of staining or coloring cloth.
6. *Dying.* Losing life; expiring.
7. *Mutable.* Changeable; capable of change.
8. *Diffidence.* The state of being diffident.
9. *Felicitate.* To make happy; to delight.
10. *Hesitate.* To pause; to delay.
11. *Commissary.* One delegated to some trust; an officer.
12. *Comical.* Droll; odd; ridiculous.
13. *Memorise.* To commit to memory.
14. *Disguise.* To mask; to muffle; to conceal the appearance of.
15. *Agreed.* Settled by consent.
16. *Impede.* To hinder; to delay; to retard.
17. *Perseverance.* Persistence in an undertaking; constancy.
18. *Interference.* A clashing; interposition; opposition.
19. *Consciously.* Knowingly.
20. *Guidance.* The act of guiding; direction.

SECOND SUBJECT.—*Penmanship.*

[N. B.—The mark on penmanship is determined by legibility, neatness, and general appearance, and by correctness and uniformity in the formation of words, letters, and punctuation marks in the 2nd Exercise of the Third Subject—Writing from plain copy—and in the Exercise of the Fourth Subject—Letter-writing.]

THIRD SUBJECT.—*Copying.*

1st Exercise.—Writing from Dictation.

[N. B.—Spelling, use of capitals, punctuation, and all omissions and mistakes are taken into consideration in marking the Exercises of this subject.]

One of the Examiners dictates an exercise of not less than ten lines so distinctly that all the persons being examined can hear him. The passage is first read for information, and then dictated in phrases of five or six words, at the rate of from fifteen to twenty-five words per minute. If from any cause the competitor misses a word, he is cautioned not to pause, but to leave a blank space and go on with the next words he hears. Three minutes are allowed after the dictation for punctuation and correction.

2nd Exercise.—Writing from plain copy.

Copy the following precisely, indicating SMALL CAPITALS by proper marks:

SEC. 8. That no person habitually using intoxicating beverages to excess shall be appointed to, or retained in, any office, appointment, or employment to which the provisions of this act are applicable.

SEC. 9. That whenever there are already two or more members of a family in the public service in the grades covered by this act, no other member of such family shall be eligible to appointment to any of said grades.

SEC. 10. That no recommendation of any person who shall apply for office or place under the provisions of this act which may be given by any Senator or Member of the House of Representatives, except as to the character or residence of the applicant, shall be received or considered by any person concerned in making any examination or appointment under this act.

FOURTH SUBJECT.—*Letter-writing.*

[N. B.—This exercise is designed chiefly to test the competitor's skill in simple English composition, knowledge of the rules of punctuation, and conception of the proper form of a letter. In marking the letter, its errors in form and address, in spelling, capitals, punctuation, syntax, and style, and its adherence to the subject are considered.]

The competitor writes a letter on the subject given by the examiners. The following letter subject was used in Series 20: "A brief account of some of the leading industries of your State."

The competitor must avoid allusion to his political or religious opinions or affiliations. The letter must contain not less than 125 words, must be addressed to the United States Civil-Service Commission, Washington, D. C., and must be dated at the place where the examination is held. The examination number, *and not the name of the competitor*, must be used for a signature to the letter.

FIFTH SUBJECT.—*Elements of the English language—Construction of sentences.*

Write the following sentences with such changes only as are necessary to correct errors in syntax and in the use of words:

Question 1. Neither of the great powers of Europe dare to disband their immense armies in view of each other's threatening demonstrations.

Question 2. Either you or he have lain yourselves open to the imputation of describing more than you saw.

Question 3. The greater part of the fields on the banks of the river are low, and abound in swamps which are almost impossible to cultivate.

Question 4. He who devotes himself quietly to his duties we should regard as more to be depended on than him who is continually promising to do so.

Question 5. You ought to have seen them feeding the animals; there was an elephant, rhinoceros, and hippopotamus, and either one of which can eat more than a horse.

SIXTH SUBJECT.—*Arithmetic.*

Question 1. Express the following in figures, using such signs, monetary or other, as may be necessary:

(*a*) Eight million and eight ten-millionths.

(*b*) Eight million eight hundred and eight ten-billionths.

(*c*) Seven million nine hundred and seventy-four thousand dollars seventy-five cents and five mills.

(*d*) Four hundred and thirty-five pounds (sterling) eighteen shillings and nine pence.

Question 2. Express the following in words: (*a*) 7,986,800.00088; (*b*) $97,970,120.058; (*c*) $\overline{\text{XXV}}\text{XLIX}$; (*d*) $\frac{25}{78}$ of $\frac{96}{1027} \div \frac{9}{97}$ of $\frac{44}{7}$.

Question 3. From the sum of 976,438, 2,526, 57,694, and 698,342 subtract 937,660, divide the remainder by 388,000, and multiply the quotient by 2.005.

Give work in full.

Question 4. Find the value of $\frac{2\frac{1}{5}+4\frac{4}{12}}{1\frac{3}{4}\times 3\frac{1}{7}} \div \frac{1}{8}$ of $6\frac{4}{7}$.

Give work in full.

Question 5. The fence around the four sides of a square field measures 3.708⅛ miles. What is the length in fur., rds., yds., and ft. of the fence on one side of the field?

Give work in full.

Question 6. A merchant buys 42 gallons of whisky, at $2.50 per gal., and keeps it for 3 years. He then finds that he has lost 7 gallons by leakage and evaporation. Estimating the value of money at 6 per cent. per annum, how much per gallon must he charge in order that he may realize a profit of 16⅔ per cent. on his outlay (including interest)? (Taken from Series 22.)

Give work in full.

Question 7. At 62½ cts. per cu. yd., what will it cost to remove an embankment 240 ft. long, 38 ft. wide, and 9 ft. high?

Give work in full.

Question 8. What is the weight (in tons, cwt., etc.) of the water which fills a cistern 9 ft. 8 in. long, 9 ft. 4 in. wide, and 6 ft. 9 in. deep, a cubic foot of water weighing 1,000 ounces? (Taken from Series 21.)

Give work in full.

Question 9. What sum placed at interest at 8 per cent. per annum will amount to $18,590 in 2 years 11 months and 27 days?

Give work in full.

Question 10. What is the difference between the interest and the true discount of $380, due in 2 years and 5 months, at 6%.

Give work in full.

SEVENTH SUBJECT.—*Elements of book-keeping and of accounts.*

Question 1. James M. Allen, of Washington, D. C., sold to William Johnson, March 1, 1887, 15 lb. of Java coffee, at 28 cents per lb.; 35 lb. of granulated sugar at 9 cents per lb.; 5 lb. of Oolong tea, at 95 cents per lb.; 50 lb. of corn meal at 3½ cents per lb.; 35 lb. of ham, at 15 cents per lb.; 2 doz. oranges, at 25 cents per doz.; 1 bbl. of flour, at $6.75. He received 20 lb. of dried quinces, at 23 cents per lb.; 35 lb. of dried cherries, at 9 cents per lb.; 2 bbls. of apples, at $5.50 per bbl., and the balance in cash.

Make out a bill for the above in proper form, and append receipt thereto.

EIGHTH SUBJECT—ELEMENTS OF THE HISTORY, GEOGRAPHY, AND GOVERNMENT OF THE UNITED STATES (Series No. 10).

Question 1. Name, in their order from west to east, the five Great Lakes, and the waters which connect them with one another.

Question 2. Name in their order from north to south the States which lie in whole or in part on the east bank of the Mississippi River. (Series 20.)

Question 3. What States of the Union are bounded in part by one of the following bodies of water: Lake Michigan, Long Island Sound, Lake Champlain, Pacific Ocean?

Question 4. In what State and on what water is each of the following-named cities: New Orleans, Memphis, Kansas City, Milwaukee, St. Paul, Albany, Cairo, Cincinnati, Hartford, Philadelphia?

Question 5. Name the Vice-President who was elected with each of the following-named Presidents: Zachary Taylor, Franklin Pierce, William Henry Harrison, James Buchanan, James A. Garfield.

Question 6. Where are the following-named battle-fields? State in what war each battle occurred: Long Island, Chancellorsville, Chapultepec, Bennington, Lundy's Lane.

Question 7. What branch of the United States Government has control of naturalization; and are naturalized citizens eligible to all offices; if not, what are the exceptions?

Question 8. Under what circumstances may the President adjourn Congress, and for how long?

Question 9. Which house of Congress has the sole power of impeachment?

Question 10. What are the constitutional qualifications of the President of the United States?

COPYIST EXAMINATION (Series No. 20).

Subjects.	Relative weights.
First: Orthography	2
Second: Penmanship	3
Third: Copying	3
Fourth: Arithmetic	2
Total of weights	10

For explanation of the "relative weights," and of the method of determining the "general average," see p. 201.

The time allowed for this examination is limited to five consecutive hours.

The first and second subjects of the copyist examination are the same as the first and second subjects of the clerk examination. The first and second exercises of the third subject are also the same as the corresponding exercises of the third subject in the clerk examination. The third exercise of the third subject is as follows:

Third exercise.—Writing from rough draft.

[N. B.—Spelling, use of capitals, punctuation, and all omissions and mistakes are taken into consideration in marking Exercises 1, 2, and 3 of this subject. Penmanship is determined by the competitor's handwriting in Exercises 2 and 3 of this subject, but is not considered in marking other subjects of this examination.]

The competitor is required to make a fair copy, ready for signature, on a blank sheet, of a rough-draft letter, such as the following; punctuating and capitalizing as in copy, but writing in full all abbreviated words:

To fit the page the following copy is greatly reduced from the original.

Mt Vernon,
21 Oct 1828

Gentlemen,

According to my promise, I have given the ~~different~~ several matters, ~~which were~~ contained in your letter of the ~~Oct~~ 1st inst, the ~~most careful~~ best consideration I ~~can~~ am able

The following ~~are~~ is the results, subject, however, to ~~and the discussion I intend to have with you on these topics~~ on my way alterations, if upon further ~~examination~~ investigation I should find ~~reason~~ cause therefor

As the business of the Executive offices will be ~~principally~~ chiefly, if not altogether, with the President, ~~positions~~ sites for their offices ~~should~~ ought to be ~~selected~~ convenient to his residence. But as the identical spots can better be chosen on the ground, I will postpone this decision until my arrival there, as I shall also do other appropriations of public ~~grounds~~ squares, if it be necessary to take the matter up for ~~consideration~~ before my ~~arrival~~ return to Phila

With great esteem
I am
Yours very truly

with the plan of the city before me, than by the letter alone,

Phila.

FOURTH SUBJECT.—*Arithmetic.*

Question 1. Add the following, placing the sum at the bottom:

79,654,321,908.25
47,776,013,705.30
92,773,331,693.25
7,774,910,236.15
44,297,793,329.37
6,105,723,266.57
132,173.63
8,857,367,397.45
42,233,001,764.86
63,437,476,074.03
3,335,602,047.90
173,827,764,501.77

Question 2. Express the following in figures: One billion ten million eleven thousand and twenty, and (decimal) one thousand and twenty-five ten-millionths.

Question 3. Express the following in sign and figures: Ten billion one hundred and ten million one hundred thousand and five dollars six cents and three and three-tenths mills.

Question 4. Express in words the following figures, signs, and abbreviations: 6 hhd. 1 bbl. 16 gal. 2 qt. — 1 bbl. 2 qt. = 6 hhd. 16 gal. ÷ 2 = 3 hhd. 8 gal.

Question 5. Express in words the following:

CXCII. XLIX. $11,111,111,111.115. £25 6*s.* 4*d.*

Question 6. Add .5, .05, .125, .0625, and divide the sum by 2. (Express answer in decimal fraction.)

Give work in full.

Question 7. A merchant purchased 340 bushels of potatoes at 80 cts. per bushel, lost 20 % of them by fire, and sold the remainder at $1.10 per bushel. Did he gain or lose, and how much?

Give work in full.

Question 8. A miller grinds for customers 3,600 bushels of wheat, taking from each bushel 4 quarts as toll; how much does he receive for the work, wheat being worth 62½ cents per bushel?

Give work in full.

Question 9. A man purchased a house, paying for it in four payments as follows: On the first payment ¼ of the purchase price; on the second payment ¼ of the remainder; on the third payment ⅓ of what then remained due; and on the last payment $2,000. What was the full amount paid for the house?

Give work in full.

Question 10. A field 250 feet long and 125 feet wide is inclosed by a tight board fence 6½ feet high; what will it cost to paint the outside of the fence at 12½ cts. per square yard?

Give work in full.

PRINTER'S ASSISTANT AND SKILLED HELPER EXAMINATION (Special—Series No. 1).

Bureau of Engraving and Printing—Treasury Department.

Subjects.	Relative weights.
First: Orthography	1
Second: Penmanship	1
Third: Copying	1
Fourth: Arithmetic	1
Total of weights	4

For explanation of the "relative weights," and of the method of determining the "general average," see clerk examination, p. 201.

The time allowed for this examination is limited to four consecutive hours.

The first and second subjects of this examination are similar in character though less difficult than the corresponding subjects of the clerk examination, and the third subject is the same as the second exercise of the third subject of that examination.

This examination can be given only in Washington and at such times as the needs of the service require. It can not be given in connection with other departmental examinations. Those who have applications on file will be notified when an examination is held.

FOURTH SUBJECT—*Arithmetic.*

Question 1. Add the following, placing the total at the bottom:

742,155.74
429.39
6,873.68
397.49
1,956,374.20

Question 2. Express in figures one thousand eight hundred and eighty-eight.

Question 3. From 332,721 take 143,832.

Give work in full.

Question 4. Write in words the following number: 501,045.

Question 5. Multiply 371,645 by 34.

Give work in full.

Question 6. Divide 109,782 by 342.

Give work in full.

Question 7. If a printer's assistant earn $1.25 a day, how much will she earn in a year of 300 working days?

Give work in full.

Question 8. If a skilled helper earn $325 in a year, how much will he have left after paying his board at the rate of $16 a month?

Give work in full.

Question 9. Add 125,324 and 3,507; from the sum subtract 342.

Give work in full.

Question 10. If a printer's assistant spend ten cents a day for street-car fare, how much will she spend in two months of 30 days each?

Give work in full.

BUREAU OF PENSIONS (Special—Series No. 9).

SPECIAL EXAMINER EXAMINATION.

Subjects.	Relative weights.
First: Orthography	1
Second: Penmanship	2
Third: Copying	1
Fourth: Letter-writing	3
Fifth: Arithmetic	2
Sixth: Elements of the geography, history, and Government of the United States	1
Seventh: Law	6
Eighth: Pension law	4
Total of weights	20

For explanation of the "relative weights," and of the method of determining the "general average," see clerk examination, p. 201. The time allowed for this examination is limited to seven consecutive hours.

The first, second, third, and fourth subjects of this examination are substantially the same as the corresponding subjects of the clerk examination, and the sixth subject is substantially the same as the eighth subject of the clerk examination.

FIFTH SUBJECT.—*Arithmetic.*

Question 1. Write in figures as decimal fractions: (*a*) Five thousand six hundred and forty-three ten-millionths. (*b*) Two thousand and twenty-two hundred-thousandths.

Question 2. Express in words: (*a*) $1,500,675,001.375. (*b*) £17 8*s*. 3*d*.

Question 3. Find the value of $2\frac{1}{4} + \frac{3}{8} - \frac{5}{6}$.

Give work in full.

Question 4. Divide 4.5 by .012.

Give work in full.

Question 5. The regular salary of a Special Examiner was $350 per quarter, with $3 additional for each day actually employed. During the first quarter of 1888 he was employed an average of 20 days per month. His expenses when employed were $3 a day and when unemployed $2 a day What was his net income for that quarter? (Series No. 10.)

Give work in full.

Question 6. A pension is granted to a widow from April 16, 1879, at $8 per month, and $2 per month for each of two children up to the age of 16; widow's pension increased to $12 per month from March 19, 1886. One child attains the age of 16 on September 1, 1889, and the other on November 22, 1882. She receives her first payment on March 4, 1887. How much should this be?

Give work in full.

Question 7. Calculate the interest on $5,650 for 1 year 5 months and 12 days at 7% per annum.

Give work in full.

Question 8. An examiner purchased a house for $5,500. At the end of 5 years he found that after paying interest on his money and all taxes he had received a net income from rent amounting to $10 a month. He sold the house for one-fifth more than its original cost. How much did he make by the transaction? (Series No. 10.)

Give work in full.

Question 9. Special examiner A reports 16 cases per month, B 14 cases per month, and C 12 cases per month. A receives $1,600 per year. If paid in proportion to work done, what should be the salary of B and of C? (Series No. 11.)

Give work in full.

Question 10. Owing to a deficiency in the appropriation bill, the salaries of the clerks in a bureau were reduced 18 per cent. for the last quarter of the fiscal year.

H. Ex. 1, pt. 8 ——14

How much did a clerk who was paid $287 for the last quarter receive during the whole fiscal year?

Give work in full.

SEVENTH SUBJECT.—*Law.*

(Series No. 1.)

Question 1. What is the difference, if any, between evidence and proof?

Question 2. What is meant by competent evidence, and what by a competent witness.

Question 3. What is the difference between primary and secondary evidence?

Question 4. If primary evidence can not be produced, what, if anything, is required of the party desiring to produce secondary evidence to make the same competent?

Question 5. What kind or quality of evidence must a party always produce to support an allegation in legal proceedings?

Question 6. What is meant by the caption and what by the jurat of an affidavit?

Question 7. Draw a complete affidavit in which John Smith shall properly set forth that Samuel Jones was free from any physical disability prior to Jones's enlistment in the military service of the United States.

Question 8. In what cases is evidence excluded on the ground of public policy? (Series No. 6.)

Question 9. What is marriage, and what are impediments to a lawful marriage (mention at least six impediments)? (Series No. 9.)

Question 10. What is divorce, and in this connection what is understood by the terms "condonation" and "recrimination"? (Series No. 9.)

EIGHTH SUBJECT.—*Pension law.*

(Series No. 1.)

(This subject, in recent series, contains ten questions, but the following are fair samples of the questions used in all of the examinations.)

Question 1. To whom and for service in what wars are pensions granted under the laws enacted since the 4th day of March, 1861?

Question 2. What is the order of succession of those entitled to pensions?

Question 3. Are the rights of soldiers and sailors the same under said laws?

Question 4. What is meant by "line of duty" as used in the pension laws? And state whether it necessarily embraces every soldier disabled in the military service.

Question 5. Must a soldier or sailor be disabled to obtain a pension under the laws mentioned; if so, what is the standard which governs, and what is the highest rate of pension?

Question 6. What does the word "disability" include, and if a soldier or sailor is pensioned for disability and afterward recovers from the same will the pension continue?

Question 7. Name all the circumstances or conditions under or on which the pension of a widow will terminate. (Series No. 6.)

Question 8. Who are minor children under the provisions of the pension laws? What additional pension is allowed to the widow of a soldier for the care and maintenance of his children; and when does such additional pension terminate? (Series No. 6.)

BUREAU OF PENSIONS (Special—Series No. 5).

MEDICAL EXAMINER EXAMINATION.

Subjects.	Relative weights.
First: Orthography	1
Second: Penmanship	1
Third: Copying	1
Fourth: Arithmetic	1
Fifth: Anatomy and physiology	4
Sixth: Chemistry, materia medica, and therapeutics	2
Seventh: General pathology and theory and practice of medicine	4
Eighth: Surgery	4
Ninth: Medical Jurisprudence and hygiene	2
Total of weights	20

For explanation of the "relative weight," and of the method of determining the "general average," see clerk examination, p. 201.

The time allowed for this examination is limited to seven consecutive hours.

The first, second, and third subjects are substantially the same as the corresponding subjects of the clerk examination.

FOURTH SUBJECT—*Arithmetic.*

Question 1. Express in figures the following numbers: Ten million seventeen hundred and seven dollars thirty-seven cents and five mills.

Question 2. Express in words the following figures, signs, and abbreviations: 17 Cong., 6 O., 15 ƒ3, 7 ƒʒ, 59 ℥.

Question 3. Express in words the following sign and figures: $170,001,310,525.625.

Question 4. Give the remainder of—lbs. xxvj—lbs. vij, ʒ vij, 3 vj, ℈ij, gr. xij.

Give work in full.

Question 5. Add the following columns of figures so as to show (1) total expenses and (2) total receipts; and subtract the expenses from the receipts so as to show (3) the profits.

Expenses.		Receipts.	
Office rent	$360.00	Day visits	$1,550.00
Feed and care of horse	240.00	Night visits	735.00
Wages of servants	276.00	Surgical operations	975.00
Purchase and repair of instruments	75.75	Office prescriptions	923.50
Repairs of carriage and harness	25.50	Mileage	842.85
R. R. fare	40.60	Medicines	427.20
Medicines	12.25		
Stationery and printing	9.35		
Total		Total	
Less expenses			
Profits			

Question 6. Reduce the following decimal fractions to common fractions, and reduce to lowest terms: .75, .125, .1875, .4.

Give work in full.

Question 7. Give the value of two and one-half pounds of sulphate of eserine at 33 cents per grain.

Give work in full.

Question 8. There were 984 patients in a certain hospital, classified as follows: 369

pulmonary diseases; 246 nervous diseases; 123 diseases of heart; and 246 various other diseases. Give the per cent. of each class.

Give work in full.

Question 9. What will it cost to carpet an office-room measuring 21 feet in length and 19½ feet in width; the carpeting being ¾ yard wide and costing $1.35 per lineal yard?

Give work in full.

Question 10. A physician accepts, in payment of a bill, a note for $275.75, due in one year and three months, without grace, at 7 per cent. What amount will be due at maturity?

Give work in full.

FIFTH SUBJECT.—*Anatomy and physiology.*

Question 1. Describe the portal vein and name its branches.

Question 2. What changes are produced in the lower jaw by age?

Question 3. Name the branches of the external carotid artery.

Question 4. Name all the conditions that influence the secretion of sweat.

Question 5. Describe the functions of the cerebellum.

SIXTH SUBJECT.—*Chemistry, materia medica, and therapeutics.*

Question 1. If to a solution of chloride of sodium be added a solution of nitrate of silver what chemical changes will take place? Indicate the changes by means of a chemical formula.

Question 2. Name three good tests for detecting sugar in the urine.

Question 3. Name the officinal preparations of iodine and give their physiological action and therapy.

Question 4. Name the officinal preparations of colchicum and give the dose of each.

SEVENTH SUBJECT.—*General pathology and theory and practice of medicine.*

Question 1. Give the differential diagnosis between sarcoma and carcinoma.

Question 2. Give in full the different modes by which wounds heal when unaided by surgery.

Question 3. Describe a case of tetanus, giving causes, diagnosis, and pathology.

Question 4. Give the symptoms, causes, and sequelæ of scurvy.

EIGHTH SUBJECT.—*Surgery.*

Question 1. Give the process of reducing by manipulation an upward and backward dislocation of the femur, the head of the bone being on the dorsum of the ilium.

Question 2. Describe a colles fracture and give treatment for same.

Question 3. Give the causes, diagnosis, and sequelæ of chronic synovitis.

NINTH SUBJECT.—*Medical jurisprudence and hygiene.*

Question 1. Give in full the symptoms attending a case of poisoning by tincture of aconite, and name the antidotes.

Question 2. Name the principal disinfectants; and give in full their therapeutical uses.

ASSISTANT EXAMINER EXAMINATION—PATENT OFFICE (Special—Series No. 9).

Subjects.	Relative weights.
First: Physics	1
Second: Technics	1
Third: Mathematics and chemistry	1
Fourth: Mechanical drawings	1
Total of weights	4

The time allowed for this examination is limited to seven consecutive hours.

FIRST SUBJECT.—*Physics.*

[N. B.—Illustrate by diagrams when practicable. Give work in full and plainly indicate the answers.]

Question 1. A pendulum beating seconds at the sea level is carried to the top of a mountain. (*a*) What will be the effect on its rate? (*b*) Why? (*c*) In what ratio.

Question 2. (*a*) What is meant in electricity by a relay? (*b*) Describe a polarized relay.

Question 3. What are the various sources of heat?

Question 4. A balloon is rising uniformly with a velocity of 10 ft. per second, when a stone is dropped from it which reaches the ground in 3 seconds. Find the height of the balloon, (*a*) when the stone is dropped; (*b*) when it reaches the ground.

Give work in full.

Question 5. A weight of 2 lb. moving with a velocity of 20 ft. per second overtakes one of 5 lb. moving with a velocity of 5 ft. per second. Find the common velocity after impact.

Give work in full.

SECOND SUBJECT.—*Technics.*

[N. B.—Illustrate by diagrams when practicable. Give work in full and plainly indicate the answers.]

Question 1. Describe the modern harvester.

Question 2. Tiles. How and of what are they made, and to what uses applied?

Question 3. Describe materials and devices employed in making a photograph.

Question 4. Describe the process of manufacture of railroad rails from the raw ore to the finished rail.

Question 5. Sugar and glucose. State the difference between them, and their modes of manufacture.

THIRD SUBJECT.—*Mathematics and chemistry.*

[N. B.—Illustrate by diagrams when practicable. Give work in full and plainly indicate the answers.]

Question 1. Reduce the following complex fraction to its simplest form:

$$\left\{\frac{\frac{1}{2}}{\frac{1}{16}}\times\frac{8\frac{1}{2}}{3\frac{1}{2}}\right\}-\left\{\frac{\frac{3}{4}\times\frac{2}{3}}{\frac{1}{4}\times\frac{2}{\frac{1}{2}}}\right\}$$

Question 2. (*a*) What is a chemical reaction? (*b*) What is a chemical re-agent? (*c*) What is a chemical equation? (*d*) How is it constructed? (*e*) Give an example.

Question 3. The stand-pipe on Meridian Hill, Washington, D. C., has a height of 100 feet and a diameter of 25 feet. What amount of iron did it require to build it,

allowing 10 per cent. for lap, waste, and pivots, the iron being ¼-inch thick and weighing ¼ lb. per cubic inch, both ends of the structure being included?

Question 4. (*a*) How can the presence of oxygen *in air* be demonstrated? (*b*) How much oxygen may be obtained from one litre of air? (*c*) What modes are adopted for obtaining it for commercial uses?

Question 5. (*a*) From what minerals is metallic lead obtained? (*b*) How many oxides of lead are there? (*c*) What are the chemical differences between red and white lead? (*d*) Describe the manufacture of white lead. (*e*) 100 kilograms of galenite yield what volume of SO_2? (*f*) What are the objections to the use of lead in city water-pipes? (*g*) What is the formula of plumbic peroxide and to what modern use is it applied?

FOURTH SUBJECT.—*Mechanical drawings.*

[A Patent Office drawing is printed below each of the following questions.]

Question 1. Describe the machine illustrated in this drawing; name the different views shown; name the several mechanical elements that appear, giving their functions. State the use of the machine.

Question 2. Describe the machine shown in the drawing, and give its purpose; name the mechanical elements that appear, and indicate their functions.

STATE DEPARTMENT EXAMINATION (Special—Series No. 3).

Subjects.	Relative weights.
First: Orthography	2
Second: Penmanship	2
Third: Copying	1
Fourth: Letter-writing	2
Fifth: Elements of the English language	2
Sixth: Arithmetic	2
Seventh: Geography and history	2
Eighth: Law (international)	4
Ninth: Law (government)	3
Total of weights	20

For explanation of the "relative weights," and of the method of determining the "general average" see clerk examination, p. 201.

The time allowed for this examination is limited to seven consecutive hours.

The first, second, third, fourth, and fifth subjects are substantially the same as the corresponding subjects of the clerk examination, p. 202, *et. seq.*

As optional subjects in the State Department examination the competitor may also be examined in one or more of the modern languages. Such examinations are of about the same grade as the supplementary examinations in the modern languages (see *post*, supplementary examinations), and consist of two exercises—one being the translation of a passage of the foreign language into English and the other the translation of a passage of English into the foreign tongue. The average obtained on an optional subject is not considered in determining the general average, but it is to the advantage of a competitor in the State Department examination to show a fair acquaintance with at least one of the modern languages.

SIXTH SUBJECT.—*Arithmetic.*

Question 1. Express one hundred billion in figures, both according to the American and according to the English method.

Question 2. Express in figures, both in the form of decimal fractions and of common fractions, the following amounts: Four millionths, twenty-one thousandths, one hundredth, and one-tenth.

Question 3. Divide 1.92 by .16.

Give work in full.

Question 4. Add $\frac{1}{2}$ of $\frac{1}{3}$ to $4\frac{1}{2}$, and from the sum subtract $2\frac{1}{4}$. (Reduce the answer to lowest terms.)

Give work in full.

Question 5. A note dated May 20, 1886, for $1,650, is payable March 4, 1887, with interest at 6 per cent. October 12, 1886, $625 was paid on the note. How much will be due, principal and interest, at its maturity?

Give work in full.

Question 6. An agent of the Government was sent $7,650 to purchase coal at a coaling station; his commission was 2 per cent. on the purchase, which he was to deduct from the money sent. Required: (1) his commission, and (2) the amount expended for coal.

Give work in full.

Question 7. If the consular fees collected by the U. S. consul at Liverpool in a year amount to £4,000, and his salary and expenses are $7,591.74, what percentage of the fees can be paid to the United States after deducting the salary and expenses, the estimated value of the pound sterling being $4.8665?

Give work in full.

Question 8. Express the value of $3,000,000 in French money, the value of the franc being 19.3 cents.

Give work in full.

Question 9. Express according to the Roman system of notation the date 1887.

Question 10. Express in words the number DCLXXXIX.

SEVENTH SUBJECT.—*Geography and History.*

Question 1. Between what parallels and meridians do the United States extend? (Answer approximately.)

Question 2. What are the boundaries of France or Germany, and of Ohio or Vermont?

Question 3. State the population, respectively, of the United States, the British Isles, the Dominion of Canada, France, and Germany.

Question 4. State the population of your native State, and of its principal city.

Question 5. State the area, in square miles, of Russia-in-Europe and Texas.

Question 6. What nation was at one time an ally of the United States? Give some particulars of the alliance.

Question 7. What circumstances led to the threatened war with France, and how was it averted?

Question 8. What are the chief controversies in which the United States have been engaged with foreign powers?

Question 9. Give some account of the origin and meaning of the Monroe doctrine.

Question 10. State some notable events in the diplomatic history of the United States. (Series No. 1.)

EIGHTH SUBJECT.—*Law (international).*

Question 1. State the ways in which nationality can be acquired.

Question 2. What is international law?

Question 3. In what way and by what stages has international law developed to its present condition?

Question 4. In cases of differences between sovereigns what are the modes of settlement?

Question 5. What are the rules regulating sovereignty over the high seas?

Question 6. What is the law with regard to the marine belt encircling a coast, and what is the law as to navigable rivers?

Question 7. In what respects has a sovereign exclusive jurisdiction of the territory within his boundaries, and what exceptions are recognized to such sovereignty?

Question 8. What are treaties, and what are some of their incidents?

Question 9. What are the functions of diplomatic agents?

Question 10. What are the functions of consular agents?

NINTH SUBJECT.—*Law (government).*

Question 1. What are the functions and powers of the Secretary of State?

Question 2. What are the chief features of distinction between the diplomatic and consular services?

Question 3. How is legislation effected in the United States generally? Name some special processes of legislation.

Question 4. To what extent are the various States of the Union sovereign powers, and in what important respect do they lack the quality of sovereignty?

Question 5. What constitutes a treaty; and when the terms of a treaty are in conflict with the provisions of a statute of the United States, which must be regarded as paramount? If the conflict be between a treaty and a law of one of the States, which prevails?

BOOK-KEEPER EXAMINATION (Special—Series No. 6).

Subjects.	Relative weights.
First: Orthography	1
Second: Penmanship	2
Third: Copying	1
Fourth: Letter-writing	1
Fifth: Arithmetic	3
Sixth: Book-keeping, theoretical questions	3
Seventh: Book-keeping, practical	9
Total of weights	20

For explanation of the "relative weights," and of the method of determining the "general average," see clerk examination, p. 201.

The time allowed for this examination is limited to twelve hours, viz., seven hours on one day for the work called for by the sixth and seventh subjects—book-keeping, theoretical questions, and book-keeping, practical—and five hours on the next week day for the first five subjects.

The first, second, third, and fourth subjects are substantially the same as the corresponding subjects of the clerk examination, p. 201 *et seq.*

FIFTH SUBJECT.—*Arithmetic.*

Question 1. The tax assessed by a certain town is $18,750; its property is valued at $1,250,000. What rate per cent. is the tax, and how much will be paid by a man whose property is assessed at $6,000?

Give work in full.

Question 2. Add these across, placing the totals in the spaces provided, and find grand total.

			Total.
$498.001	$32.741	$18.90	$.....
75.60	37.204	.17	.....
1,476.009	618.2045	84.29	.....
89.8045	777.09	4.221	.....
1,612.220	1.47	329.90	.....
77,624.00	6.196	91.19	.....
134.93	16.031	1,716.10	.....
16.676	414.80	5.125	.....
232.301	17.76	1,801.90	.....
88.74	24.001	1.29	.....
1.9011	756.23	96.427	.....
Grand total.....			.....

Question 3. What is the value in currency of 7,984 ounces of silver bullion at $19.84 per pound (avoirdupois weight) when gold is selling at 10½?

Give work in full.

Question 4. What must be paid for a $200 four-and-a-half per cent. bond in order to make it an 8 per cent. investment?

Give work in full.

Question 5. G & H engaged in business as partners, G invested $10,000 and H $5,000, G sharing ⅔ and H ⅓ of the gains and losses (no interest was kept). Their assets at the close of the year consisted of cash, $2,100; bills receivable, $4,400; merchandise, $13,000; and personal accounts, $8,000, 10 per cent. of which are considered worthless. Their liabilities are bills payable, $1,625; personal accounts, $5,625. G drew out during the year $850, and H $1,075.

If H should retire from the firm how much would he be entitled to receive?

Give work in full.

SIXTH SUBJECT.—*Theory of book-keeping.*

Question 1. What is the first account to be opened in a double-entry ledger, and what does it show?

Question 2. What is an inventory? How is its result made to appear in the ledger?

Question 3. What are the distinctive functions of the day-book, journal, and ledger, respectively, in the economy of accounts?

Question 4. What does a ledger, properly kept, show at all times?

Question 5. Why should the balance of stock accounts or balance of partners' accounts equal the difference in the balance account?

SEVENTH SUBJECT.—*Practice of book-keeping.*

The competitor is required to rule off two books on the blank sheets furnished him, a journal-day-book and ledger, and to make thereon the entries representing the following transactions:

Question 1. March 1, 1887, commenced business, investing the following:

Cash	$6,000
Merchandise, as per inventory	9,000
Real estate (house and lot 640 Elm st.)	5,000
Bills receivable (note against J. M. Butt)	3,000
Personal acc't against Chas. E. Persons	1,500
	24,500

M'ch 3, '87, paid drayage, $45.50, and insurance, $17.95; bo't of C. W. Goyer & Co. 1,825 lb. S. C. hams @ 10 cts. and 3,608 lb. B. bacon, @ 12½ cts., accepting their draft favor of Third National Bank for the am't in payment thereof. M'ch 6, '87, sold Geo. Riggles 100 bbl. flour @ $4.75, 10 bbl. (480 gal.) sirup @ 50 cts. per gal.,

12,000 lb. hams @ 11 cts. M'ch 10, '87, rec'd cash for rent of house at 640 Elm st., 4 mos. @ $68 per mo.; paid cash for digging well on Elm street lot, $64.75. M'ch 27, '87, drew 30 d's' draft on C. E. Persons for am't of his acc't, which he accepted; sold Ed. Goodrich 4,000 lb. B. bacon @ 10½ cts., 10 t'rc's, 4,000 lb., lard @ 10 cts., receiving cash for ½, accepted draft on A. B. Ferguson for $310, and balance on acc't. M'ch 30, '87, sold house and lot 640 Elm st. to Thos. McKiernan for $5,800, receiving cash $2,800, his note, due in 6 mo's @ 6 %, for balance; discounted Thos. McKiernan's note at Third Nat. B'k, money being worth 4 %, and deposited proceeds in said bank. Apr. 3, '87, paid draft favor of C. W. Goyer & Co. by sending them a sight draft on Geo. Riggles for the am't, the same being duly honored. Apr. 5, '87, B. bacon bo't of C. W. Goyer being damaged, a discount of 2½ % on the am't was allowed. Apr. 7, 87, J. M. Butt pays $1,500 on his note, and interest to date, $78.50. Apr. 10, '87, paid clerk-hire, $125; for services of porter, $75.

Merchandise inventory, $8,425.73.

Close acc'ts, bring down balances, and furnish a trial balance.

Question 2. Commenced business with a cash capital of $9,244. On March 1, 1888, took an account of stock, amounting to $9,745

The cash account was	Dr.,	$1,200
The bills receivable amounted to	"	7,840
The real estate (not included in stock) amounted to	"	4,000
The merchandise account showed a balance of	"	2,609
The expense account footed	"	2,350
The bills payable amounted to	Cr.,	9,125
The interest account	"	105
The personal accounts (considered as worthless) amounted to	Dr.,	475

Give the amount of loss or gain, giving details to show the result, and make the necessary journal entries to close the ledger.

INSPECTOR EXAMINATION (Special—Series No. 1).

POST-OFFICE DEPARTMENT.

Subjects.	Relative weights.
First: Orthography	1
Second: Penmanship	1
Third: Copying	1
Fourth: Description of persons	1
Fifth: Writing letters and reports	2
Sixth: Arithmetic	1
Seventh: Elements of book-keeping and of accounts	1
Eighth: United States geography, government, postal laws and regulations	2
Total of weights	10

For explanation of the "relative weights," and of the method of determining the "general average," see clerk examination, p. 201.

The time allowed for this examination is limited to eight consecutive hours.

The first, second, and third subjects of this examination are substantially the same as the corresponding subjects of the clerk examination, except that the first subject includes an exercise in writing abbreviations in addition to the usual spelling exercise. For the abbreviation exercise the examiner pronounces the full word, and the competitor is required to write its authorized abbreviation.

arrest on charge of embezzling postal funds. Describe the person pointed out h such fullness and accuracy as to enable the marshal to identify him as he leaves train. Use this sheet for the purpose. Make dispatch as brief as possible. your examination number and *not* your name for the signature to the telegram. ly fifteen minutes will be allowed for writing this description."

FIFTH SUBJECT.—*Writing letters and reports.*

B.—The exercises of this subject are designed chiefly to test the competitor's skill in simple glish composition, knowledge of the rules of punctuation, conception of the proper form of a er or report, and skill in treating the subject. In marking the letters their errors in form and ress, in spelling, capitals, punctuation, syntax and style, and their adherence to the subject be considered. The handwriting in these exercises will help to determine the rating on "penship," which is the second subject, but will not be taken into consideration in ascertaining the rks" of the letters.]

exercise. "Inspectors are frequently required to assist in securing the lease mises for use as post-offices. Write a brief letter in the space below submitting ls of John Smith to lease a building for that use at B———. Describe the ing, give information as to its location, conveniences, advantages, size, materials ich constructed, dimensions of rooms offered for post-office uses, rate of rental, iption by lot, metes, or bounds, etc., full name of lessor, and statement as to the ableness of the rental, so that the Department can be fully advised and can a lease describing the premises accurately.

he competitor must avoid allusion to his political or religious opinions or affil-n. The letter must contain not less than 125 words, must be addressed as ws: 'To the Chief of Post-Office Inspectors, Washington, D. C.,' and must be at the place where the examination is held. The examination number, *and e name of the competitor*, must be used for a signature to the letter."

nd exercise.—"The Postmaster-General be, and he is hereby, authorized to investi-all claims of postmasters for the loss of money-order funds, postage-stamps, ed envelopes, newspaper wrappers, and postal-cards belonging to the United s in the hands of such postmasters, resulting from burglary, fire, or other una-ble casualty, and if he shall determine that such loss resulted from no fault or gence on the part of such postmasters, to pay to such postmasters or credit them

"The following outline of facts is stated:

"On January 15, 1885, the post-office at ——, county of ——, State of ——, was entered by burglars. The postmaster reports that the burglars broke into the office in the night-time and took from the safe and carried away the following:

"Postal funds, that is, moneys derived from sale of stamps, stamped envelopes, and the like	$67.50
"Money-order funds, that is, moneys in postmaster's hands received from and payable for money-orders, of which he must keep separate account	112.40
"Stamps	46.50
"Stamped envelopes	16.40
"Newspaper wrappers	4.60
"Postal-cards	2.50

"None of these articles or funds were recovered, and the postmaster claims credit for the same in his account with the Department. The facts appear that the property was in a safe; the burglars entered the building (which was unoccupied) by prying open a shutter, cutting or breaking the glass in the window, to enable them to remove a fastener by which the window was fastened; that they drilled a hole in the safe and blew open the door with powder, and made their escape with the contents above described. The claim was presented in due time.

"Make, in the form of a letter, a brief report of these facts, as an inspector, and make such recommendation as you deem proper, giving your reasons for the disallowance or allowance of the claim, and if you favor the allowance of any part of it, state the amount. Note carefully what the law allows credit for and what it does not.

"The competitor must avoid allusion to his political or religious opinions or affiliations. The letter must contain not less than 125 words, must be addressed as follows: 'To the Chief of Post-Office Inspectors, Washington, D. C.,' and must be dated at the place where the examination is held. The examination number, *and not the name of the competitor*, must be used for a signature to the letter."

SIXTH SUBJECT.—*Arithmetic.*

Question 1. Express the following in figures, using such monetary signs as may be necessary:

Ninety-six million seven hundred and six dollars six cents and two mills.

Question 2. Express the following in words: (*a*) MCCCXCII. (*b*) $530,763, 120.167.

Question 3. Multiply 540.101 by 10.95, and divide the product by .365.

Give work in full.

Question 4. Add the following numbers; subtract from their sum 193,540:

72,756$\frac{1}{2}$
63,429$\frac{1}{4}$
173,287$\frac{4}{5}$
5,548$\frac{14}{16}$
677$\frac{12}{16}$

Give work in full.

Question 5. The revenues of a post-office in 1884 were $1,260. In 1885 they were $1,146.60; what was the per cent. of decrease?

Give work in full.

Question 6. The following stock of postage-stamps, stamped envelopes, etc., was found on hand at Clinton (Nebr.) post-office at close of a quarter:

29 sheets	1-c. stamps		100 stamps to each sheet.
25 "	2-c. "		
33 "	4-c. "		
62 "	10-c. "		50 " " " "
37 "	15-c. "		

38 boxes 1-c. postal-cards, 500 cards in each box.

12 " newspaper wrappers, 250 in each box, @ $11.00 per thousand.

12 " stamped envelopes, 500 in each box, and 368 envelopes (part of box), @ $21.80 per thousand.

State the total value of this stock, giving the work in full.

Question 7. An inspector found that the postmaster at ——— had, on the 5th day of July, 1881, unlawfully paid $467.50 to one A B, out of the moneys of the Government. This sum was recoverable with interest at 6 per cent. from the time it was received until time of payment. On the 19th of December, 1885, the inspector demanded restitution of this sum unlawfully paid, and A B, to avoid suit, paid the amount due. What sum must the inspector collect and deposit as postal revenue to satisfy the demand?

Give work in full.

Question 8. Five registered letters, containing, respectively, $150, $202, $78, $104, and $116, were rifled of their contents by a postal clerk. When arrested he made restitution of $523.25, which an inspector was required to apportion pro rata among the senders of the letters. What amount should he pay to each out of the sum recovered?

Give work in full.

Question 9. An inspector being entitled to a salary of $1,400 per annum was on duty twelve days. He was entitled to $4 per diem for his traveling expenses, and to re-imbursement for $12.50 paid as stage fare, $17.40 steam-boat fare, and $3.25 for telegraphing on Government business during that time. State his account for services, per diem, and expenses for the twelve days. It is assumed that the twelve days' service was rendered in the month of November, occurring in a quarter which has ninety-two days, the quarterly pay being $350.

Give work in full.

Question 10. Under the law the salary or compensation of postmasters at fourth-class offices consists of—

(1) All the box rents, if there are any.

(2) Commissions on the amount of postage-due stamps, ordinary postage-stamps, stamped envelopes, postal-cards, and newspaper and periodical stamps canceled on matter actually mailed at their offices, and on amounts received from sales of waste paper, dead newspapers, printed matter, and twine sold, at the following rates: On the first $50 or less, 100 per cent.; on the next $100 or less, 60 per cent.; on the next $200 or less, 50 per cent.; on the excess above $350, 40 per cent.

In no case is the compensation of a postmaster of this class to exceed $250 in any one quarter.

During the year a postmaster's account was as follows:

Quarter.	Box rent.	Cancellation of 2-cent stamps.	Cancellation of 1-cent stamps.	Cancellation of postal-cards.	Cancellation of stamped envelopes.	Sales of waste paper, &c.	Sales of twine.
First	$77.00	$46.00	$22.00	$6.17	$47.00	$0.67	$3.12
Second	93.00	71.55	18.09	7.18	39.47	1.69	2.04
Third	87.19	53.04	17.06	9.49	27.96	.74	3.19
Fourth	85.15	39.45	18.32	8.27	33.40	.95	4.15

What was his compensation each quarter? What was his salary for the year?

Give work in full.

SEVENTH SUBJECT.—*Elements of book-keeping and of accounts.*

[N. B.—Form, neatness, and general accuracy will be considered in marking the papers of this subject.]

First exercise.—The postmaster of a money-order office is required to transmit to the Superintendent of the Money-Order System a weekly account or statement of his money-order business. The balance of money-order funds in his hands Saturday night, May 9, 1885, was $519.64. Monday, May 11, 1885, he issued two money-orders for $45 and $16.75, respectively; Tuesday, May 12, he issued one money-order for $97, and paid three money-orders for $7, $37.75, and $63, respectively; Wednesday, May 13, he issued money-orders for $9.45 and $3, respectively, and remitted $355 in a registered package to the postmaster at New York City, with whom he deposits

surplus money-order funds; Thursday, May 14, he received $175 money-order funds, issued one order for $37, and received notice from the Auditor for the Post-Office Department that he was entitled to money-order commissions amounting to $37.86 for transacting the money-order business during the preceding quarter, and was entitled to credit for that amount; Friday, May 15, he issued four orders for $77, $53, $3.55, and $1.57, respectively, and paid two orders for $95 and $0.95, respectively; Saturday, May 16, he remitted $297 to the postmaster at New York City, issued one order for $2, and paid two orders of $50 each.

State the postmaster's money-order account for the week ending May 16, 1885.

Schedule of fees which the postmaster must collect from the public on issue of money-orders.

For sums not exceeding $10	8 cents.	Over $60 and not exceeding $69	30 cents.
Over $10 and not exceeding $15	10 cents.	Over $69 and not exceeding $70	35 cents.
Over $15 and not exceeding $30	15 cents.	Over $70 and not exceeding $80	40 cents.
Over $30 and not exceeding $40	20 cents.	Over $80 and not exceeding $100	45 cents.
Over $40 and not exceeding $50	25 cents.		

Second exercise.—Draw a promissory note for $325, payable in 2 years from date of note, with interest at 6 per cent., payable annually.

EIGHTH SUBJECT.—*Geography, government, and postal laws and regulations.*

[N. B.—The first five questions of this subject are substantially the same as the geography of the eighth subject of the clerk examination, p. 205.]

Question 6. Name all of the Executive Departments of the General Government and give the official title of the head of each Department.

Question 7. Where is the power to establish post-offices and post-roads vested by the Constitution? By whom and how are postmasters appointed?

Question 8. Under what circumstances have officers of the postal service the right to open sealed letters in the mails not addressed to themselves?

Question 9. (*a*) What are the domestic rates of postage on mail matter of the first, second, third, and fourth classes, respectively? (*b*) What is the difference between a registered letter and an ordinary letter?

Question 10. A postmaster having unlawfully applied to his own use the money-order funds, stamps, and postal-cards in his possession as such officer, sets fire to the post-office, which is consumed. In order to obtain credit in his accounts for the money, stamps, etc., thus misapplied, he then makes and presents to the Department affidavit that the money, stamps, etc., were destroyed in the fire, and that the fire occurred without fault or negligence on his part. Of what crimes is he guilty?

TOPOGRAPHIC AID EXAMINATION (Special—Series No. 2).

United States Geolog. Survey.

Subjects.	Relative weights.
First: Letter-writing	1
Second: Algebra	2
Third: Geometry	2
Fourth: Plane trigonometry	2
Fifth: Surveying	2
Sixth: Geodesy	2
Seventh: Astronomy	2
Eighth: Topographic drawing	2
Total of weights	15

For explanation of the "relative weights," and of the method of determining the "general average," see clerk examination, p. 201.

The time allowed for this examination is limited to seven consecutive hours.

The first subject is substantially the same as the fourth subject of the clerk examination, p. 203.

SECOND SUBJECT—*Algebra.*

Question 1. Subtract $\frac{1}{a}$ from $\frac{1}{b}+\frac{1}{a}$ and reduce the result to a common denominator.

Give work in full.

Question 2. Find $x+y$ and $x-y$ from the equations

$$3x+2y=8,$$
$$2x+3y=13.$$

Give work in full.

Question 3. Define a logarithm and show how to derive x in terms of the logarithms of a and b from the equation $a^{-x}=b$.

Give work in full.

Question 4. Solve the equation $\frac{1}{2x}+x=1$.

Give work in full.

THIRD SUBJECT—*Geometry.*

[N. B.—All mathematical work should be given in full. Illustrate by diagram when practicable.]

Question 1. The corresponding sides of two similar triangles are to each other as 2 to 5. What is the ratio of their areas?

Question 2. Show how to find the area of a plane triangle when the three sides are given.

Question 3. If the area of a circle is 25 square feet what is its radius?

Question 4. What data are necessary to determine the area of a spherical triangle?

FOURTH SUBJECT—*Plane trigonometry.*

[N. B.—All mathematical work should be given in full. Illustrate by diagram when practicable.]

Question 1. If the sine and cosine of an angle are $-a$ and $+b$ respectively, in what quadrant does the angle lie?

Question 2. What are the angles of an isosceles triangle whose base is 10 and whose altitude is 5?

Question 3. Given two angles and the included side of a triangle. Show how to find the other parts.

Question 4. Prove that in any triangle

$$\frac{a+b}{a-b}=\frac{\text{sin. } A+\text{sin. } B}{\text{sin. } A-\text{sin. } B}=\frac{\text{tan. } \frac{1}{2}(A+B)}{\text{tan. } \frac{1}{2}(A-B)}$$

FIFTH SUBJECT—*Surveying.*

[N. B.—Illustrate by diagram when practicable.]

Question 1. State the principal adjustments of the theodolite and explain the process of adjusting its attached level bubbles.

Question 2. Define the difference between magnetic and astronomic azimuth.

Question 3. Illustrate by means of a diagram the effects of curvature and refraction in leveling work, and show how those effects may be eliminated.

Question 4. Make a plan showing the relative position of the northeast quarter of the northwest quarter of section 17, township 3 north, range 11 east.

SIXTH SUBJECT—*Geodesy.*

[N. B.—Illustrate by diagram when practicable.]

Question 1. What is the shape and what is the approximate size of the earth?

Question 2. Define meridians and parallels.

Question 3. Show how to reduce a base line to sea level.

Question 4. Explain how the geodetic positions (latitudes and longitudes) of points in a triangulation are computed.

SEVENTH SUBJECT—*Astronomy.*

[N. B.—Illustrate by diagram when practicable.]

Question 1. What is sidereal time and how does it differ from mean time?

Question 2. What instruments are used to determine time by astronomical observations?

Question 3. How are latitude and longitude determined?

Question 4. Define the term azimuth, and give a method for determining azimuth by astronomical observations.

EIGHTH SUBJECT—*Topographic drawing.*

[N. B.—Drawing paper is furnished for questions 2, 3, and 4.]

Question 1. State the various methods of expressing relief on maps.

Question 2. Make a perspective sketch from the accompanying photograph.

Question 3. Make a rough map showing drainage, and sketch contours from the same.

Question 4. Make samples of lettering.

METEOROLOGIC CLERK EXAMINATION (Special—Series No. 1).

War Department—Signal Office.

Subjects.	Relative weights.
First: Orthography	1
Second: Penmanship	1
Third: Copying	1
Fourth: Letter-writing	1
Fifth: Arithmetic	2
Sixth: Meteorology	7
Seventh: Use of meteorological tables	7
Total of weights	20

For explanation of the "relative weights," and of the method of determining the "general average," see clerk examination, p. 201.

The time allowed for this examination is limited to seven consecutive hours.

The first, second, third, and fourth subjects of this examination are substantially the same as the corresponding subjects of the clerk examination, except that the third subject does not contain the exercise in "writing from dictation." (See p. 202 *et seq.*)

FIFTH SUBJECT—*Arithmetic.*

Question 1. Express the following in figures, using such signs, monetary or otherwise, as may be necessary:

(*a*) Five million three thousand and seven, and four thousand and one ten-millionths.

(*b*) Three million two hundred and nine dollars thirty-seven cents and two mills.

Question 2. Express the following in words:

(*a*) $\overline{\text{XCIV}}$CCXLVIII.

(*b*) $14,000,027.034.

(*c*) 3,010,004.05007.

(*d*) 6 T. 3 cwt. 7 lb. 5 oz.

Question 3. Divide 52.28178 by 3.0047, and multiply the quotient by 4.09.

Give work in full.

Question 4. Find the value of $\frac{2\frac{1}{2}+4\frac{4}{17}}{1\frac{1}{4}\times 3\frac{1}{3}} \div \frac{1}{8}$ of $6\frac{4}{7}$.

Give work in full.

Question 5. What is the length of a fence required to inclose a rectangular piece of ground 121 feet wide containing one acre? (4,840 sq. yds.=1 acre.)

Give work in full.

Question 6. A grocer sells goods to a customer for $352 by weights averaging $15\frac{1}{2}$ ounces to the pound. He afterwards sells said customer goods for $320 by weights averaging $16\frac{1}{2}$ ounces to the pound. How much does the grocer make or lose by the false weights?

Give work in full.

Question 7. A merchant buys 42 gallons of whisky at $2.50 per gallon, and keeps it for three years. He then finds that he has lost 7 gallons by leakage and evaporation. Estimating the value of money at 6 per cent. per annum, how much per gallon must he charge in order that he may realize the full amount of the cost, including the estimated interest.

Give work in full.

Question 8. The owner of £4,500 in English consols (3 *per cents*) sells them at 98, and invests the proceeds in 6 per cent. $100 bonds which he buys at 106. What is the difference in dollars and cents between his income from the consols and from the bonds? (£=$4.85.)

Give work in full.

Question 9. What is the weight (in tons, cwt., etc.) of the water which fills a cistern 9 feet 8 inches long, 9 feet 4 inches wide, and 6 feet 9 inches deep, a cubic foot of water weighing 1,000 ounces?

Give work in full.

Question 10. A grocer pays 18 cents per pound for coffee and roasts it, losing 10% of the weight in the process. What must he charge per pound for the roasted coffee in order to make a profit of 20%?

Give work in full.

SIXTH SUBJECT.—*Meteorology.*

Question 1. What use is made of barometers by the signal service?

Question 2. Define an isothermal line.

Question 3. How does the sun heat the atmosphere?

Question 4. What instrument is used to measure the velocity of the wind?

Question 5. From what directions are the prevailing surface winds within the equatorial system?

Question 6. Give Loomis's explanation of the formation of dew.

Question 7. State the conditions that favor the formation of hoar frost.

Question 8. State the accepted classification of clouds.

Question 9. Define a storm.

Question 10. In what respect do cyclones or hurricanes differ from tornadoes?

SEVENTH SUBJECT—*Use of meteorological tables.*

Question 1. Find the mean of the two following series of temperatures:

°		°
45.6		18.0
58.9		32.9
39.2		17.6
17.1		14.2
18.5		9.1
16.7		0.0
75.8		
82.1	Mean (to the nearest tenth)..	

Mean (to the nearest tenth)..

Question 2. Convert the following Fahrenheit temperatures into centigrade (to the nearest tenth): 86.0°, 77.2° 10.0°,—40.0°.

Question 3. Convert the following inches into millimeters (to the nearest tenth): 19.760, 10.055, 17.994, 18.518.

Question 4. Find from the tables the dew point and the relative humidity for the following pairs of readings of the dry and wet bulb thermometers:

Dry thermometer.	Wet thermometer.
°	°
80.0	68.5
59.3	39.0
47.5	35.5
60.0	49.3

Question 5. Reduce the following barometer readings to freezing point:

Attached thermometer.	Barometer reading.
°	*In.*
49.5	29.786
76.0	29.371
83.7	30.563
26.7	30.431

Question 6. For an observed barometer reading reduced to freezing point, equal to 27.42 at an altitude of 2,410 feet, what is the reading reduced to sea-level, the mean temperature of the air being 55.0? At an altitude of 5,470 feet and the reading 23.75 reduced to freezing point, what would be the reading reduced to sea-level, the mean temperature being 14?

Question 7. Given the formula $p = .005\ V^2$.

In which p = pressure per sq. ft., and V = velocity in miles per hour. Compute to the nearest tenth the velocities corresponding to these pressures:

$p = 8.0$ lb. 9.5 lb. 15.4 lb. 36.3 lb.

Question 8. Convert the following velocities, feet per second, into meters per second (to the nearest tenth):

8.0 31.5 70.0 47.2

Question 9. In longitude 105 west at 8 a. m., what is the corresponding 75th meridian time?

At 8 p. m. 75th meridian time, what is the corresponding local time in longitude 70 west?

Question. 10. The following means of barometer readings having been obtained, shorten to two places of decimals, having regard to the correct figure to be adopted when the rejected portion is exactly half of the last place of figures retained.

29.8643 29.7550 28.6851 29.9750.

TOPOGRAPHIC DRAFTSMAN'S EXAMINATION (Special—Series No. 2).

Subjects.	Relative weights.
First: Letter-writing	2
Second: Geography	2
Third: Computing	2
Fourth: Tracing	2
Fifth: Drawing from field sketches	4
Sixth: Contour construction	4
Seventh: Scale drawing	4
Total of weights	20

For explanation of the "relative weights," and of the method of determining the "**general average**," see clerk examination, p. 201.

The time allowed for this examination is limited to nine consecutive hours.

The first subject is substantially the same as the fourth subject of the clerk examination, **and the second subject** is substantially the same as the geography of the eighth **subject of the** clerk examination, pp. 203 and 205. The time occupied by the competitor **in executing** the work is taken into consideration in marking each subject.

THIRD SUBJECT.—*Computing.*

Question 1. The distance between two points on a map, having a scale of 6.55 miles to an inch, is 22.35 inches. Give the distance in miles.

Give work in full.

Question 2. The actual distance between two cities is one hundred miles. The distance between those cities on a certain map is four inches. What is the fractional scale of the map?

Give work in full.

Question 3. The two sides inclosing an angle of ninety degrees measure 117.25 and 93.5 feet, respectively. Give the area of the triangle.

Give work in full.

FOURTH SUBJECT.—*Tracing.*

The applicant is given a portion of a topographic map, and is required to trace it on tracing-linen with India ink.

FIFTH SUBJECT.—*Drawing from field sketch.*

Transfer to drawing paper, and ink, the following chart:

[NOTE.—This exercise is designed to test applicant's ability to transfer topographic drawings from original field sketch and to perfect the same in India ink. Especial care should be taken to produce sharp, uniform, and unbroken contour lines. Drainage should be lettered in italics (caps and lower case); mountain and other hypsographic names in block letters (caps); towns, trails, and wagon roads in upright Roman letters (caps and lower case), and railroads in inclined block (caps).]

SIXTH SUBJECT.—*Contour construction.*

Upon the following chart construct contours in vertical intervals of 50 feet. Use pencil:

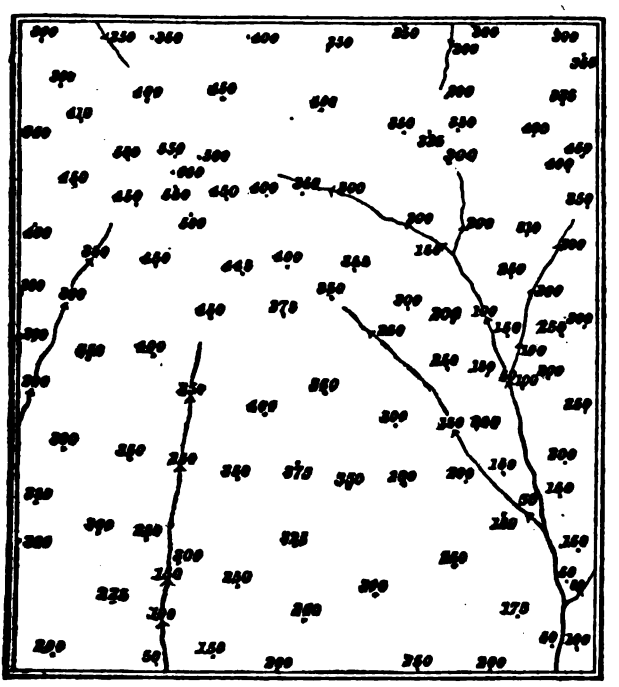

SEVENTH SUBJECT.—*Scale drawing.*

Compile on accompanying sheet of drawing paper and enlarge to a scale of $\frac{1}{125000}$ the following chart. Use India ink:

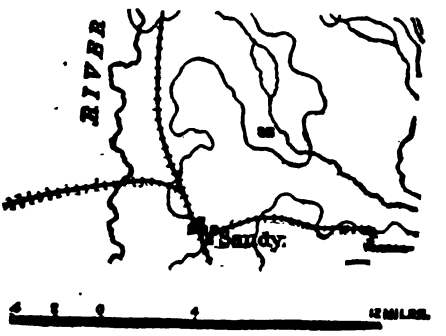

COPYIST OF MECHANICAL DRAWINGS' EXAMINATION (Special—Series No. 2).

Subjects.	Relative weights.
First: Letter-writing	3
Second: Arithmetic	3
Third: Tracing	6
Fourth: Tracing of indistinct drawings	5
Total of weights	20

For explanation of the "relative weights," and of the method of determining the "general average," see clerk examination, p. 201.

The time allowed for this examination is limited to six consecutive hours.

The first subject is substantially the same as the fourth subject of the clerk examination The time occupied by the competitor in executing the work is taken into consideration in marking each subject.

SECOND SUBJECT.—*Arithmetic.*

Question 1. The following table exhibits the number of applications for patents and the receipts and expenditures of the United States Patent Office during the years indicated. Required: (1) The sum total of applications, receipts, and expenditures during the whole period; (2) the average number of applications and the average amount of receipts and of expenditures per year from 1882 to 1886, inclusive; and (3) the surplus for each year and the average surplus per year during the five years stated:

Year.	No. of applications.	Receipts.	Expenditures.	Surplus.
1882	31, 522	$1, 009, 219. 45	$683, 867. 67	
1883	35, 577	1, 146, 240. 00	675, 234. 86	
1884	35, 600	1, 075, 798. 80	970, 579. 76	
1885	35, 717	1, 188, 098. 15	1, 024, 378. 85	
1886	35, 968	1, 154, 551. 40	902, 503. 40	
Totals				
Average per year				

Question 2. Express in figures the following: One million one hundred thousand and one and (decimal) seven thousand four hundred and seven millionths.

Question 3. Express in words the following: 1,074,974.35.

Question 4. What would be the cost of 3¾ yards of cloth at $1.15 per yard? *Give work in full.*

THIRD SUBJECT.—*Tracing.*

Trace, in India ink, on tracing linen, the following illustration:

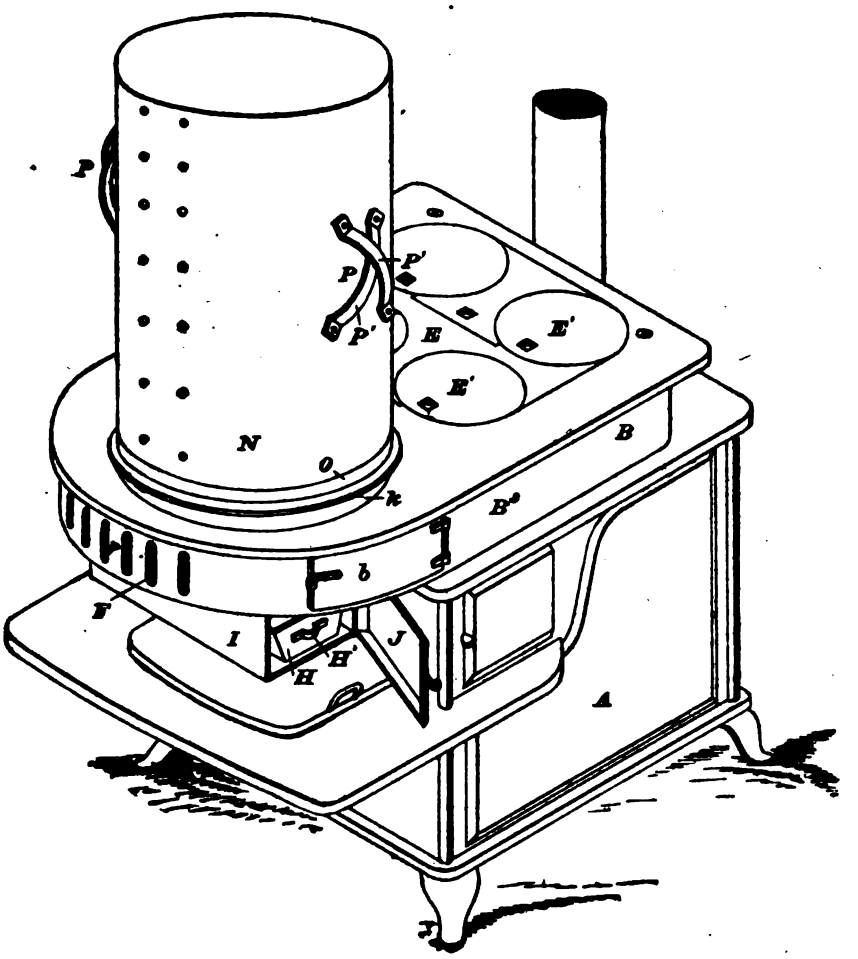

FOURTH SUBJECT.—*Tracing of indistinct drawings.*

Trace, in India ink, on tracing linen, the following illustration; shading and shade and sectional lines to be in conformity with rules governing mechanical drawings:

[NOTE.—This exercise is designed to test applicant's ability to trace from indefinite and obscure originals and to furnish copy in lines susceptible of reproduction.]

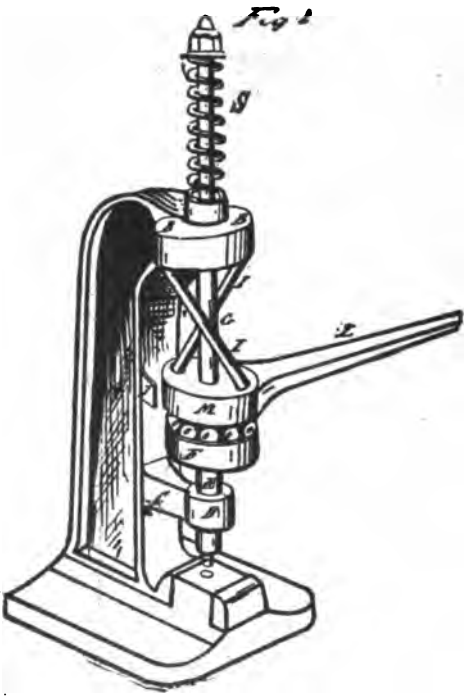

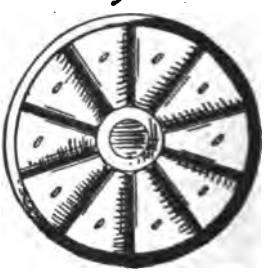

MECHANICAL DRAFTSMAN'S EXAMINATION (Special—Series No. 2).

Subjects.	Relative weights.
First: Letter-writing	2
Second: Arithmetic	2
Third: Applied mechanics and technical terms	4
Fourth: Tracing	3
Fifth: Shading and section lines	4
Sixth: Mechanical drafting	5
Total of weights	20

For explanation of the "relative weights," and of the method of determining the "general average," see clerk examination, p. 201.

The time allowed for this examination is limited to nine consecutive hours.

The first subject of this examination is substantially the same as the fourth subject of the clerk examination, p. 203.

SECOND SUBJECT.—*Arithmetic.*

Question 1. The following table exhibits the number of applications for patents and the receipts and expenditures of the United States Patent Office during the years indicated. Required: (1) The sum total of applications, receipts, and expenditures during the whole period; (2) the average number of applications and the average amount of receipts and of expenditures per year from 1882 to 1886, inclusive; and (3) the surplus for each year and the average surplus per year during the five years stated:

Year.	No. of applications.	Receipts.	Expenditures.	Surplus.
1882	31,522	$1,000,219.45	$683,867.67	
1883	35,577	1,146,240.00	675,234.86	
1884	35,600	1,075,798.80	970,529.76	
1885	35,717	1,188,098.15	1,024,378.85	
1886	35,968	1,154,551.40	992,508.40	
Totals				
Average per year				

Question 2. A mechanic draftsman's salary is $1,000. Assuming that he works seven hours every day, with the exception of Sundays and of thirty working days' leave of absence, how much does he earn each hour that he works?

Give work in full.

Question 3. Express in figures the following number: Eight billion three hundred and four million seven thousand and thirteen.

Question 4. Express in words the following number: 7,403,617,314.015.

THIRD SUBJECT.—*Applied mechanics and technical terms.*

Question 1. The distance between a certain eccentric center and its shaft center is five inches. The eccentric shaft revolves ninety times per minute. What is the length of the pitman thrust for each revolution, and what is the aggregate measure of thrusts during a continuous run of nine hours?

Question 2. Name the different views commonly used in representing mechanical devices by drawings.

Question 3. Give technical terms of parts lettered A, B, C, D, E, and F.

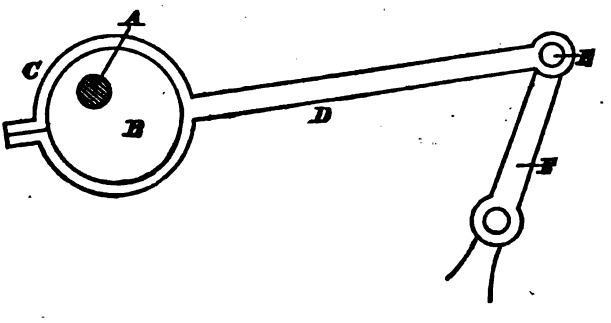

FOURTH SUBJECT.—*Tracing.*

Trace, in India ink, on tracing linen, the following illustration; shading and shade lines to be in conformity with rules governing mechanical drawings. Add a name, title of the invention, and a number and date of patent:

[NOTE.—This exercise is designed to test applicant's ability to trace from indefinite originals and to furnish copy in lines susceptible of reproduction.]

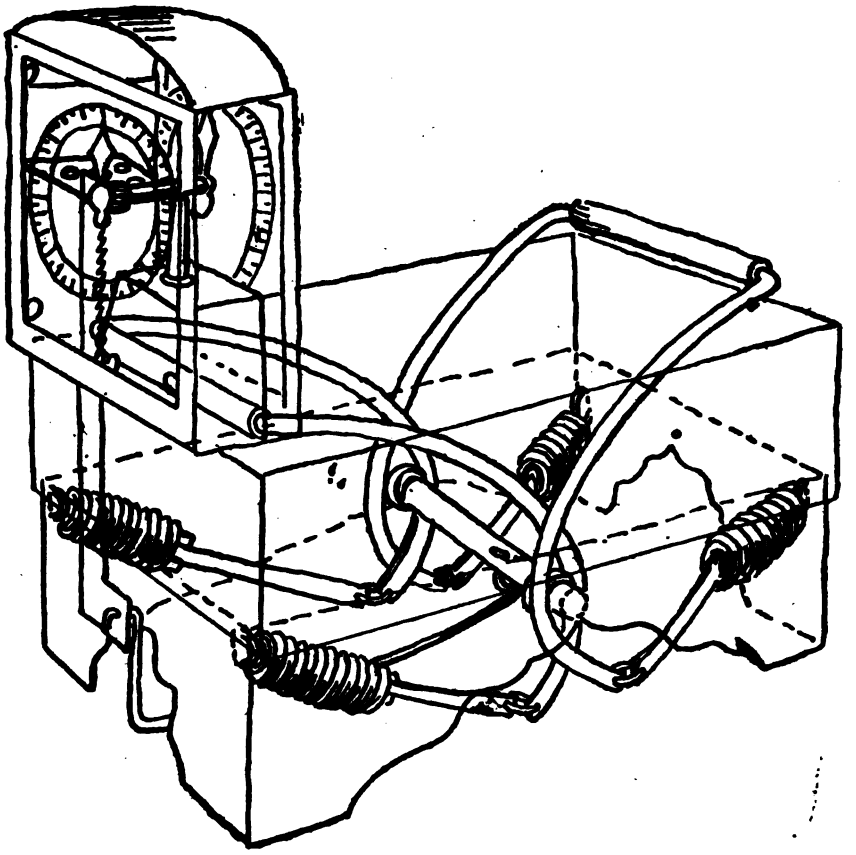

FIFTH SUBJECT.—*Shading and shade and section lines.*

Add to the following illustration, marked A, the necessary shade and section lines, and to illustration marked B shade lines and shading; shading and shade and section lines to be in conformity with the rules governing mechanical drawings.

[NOTE.—This exercise is designed to test the applicant's ability to perfect in lines and render intelligible a drawing in outline.]

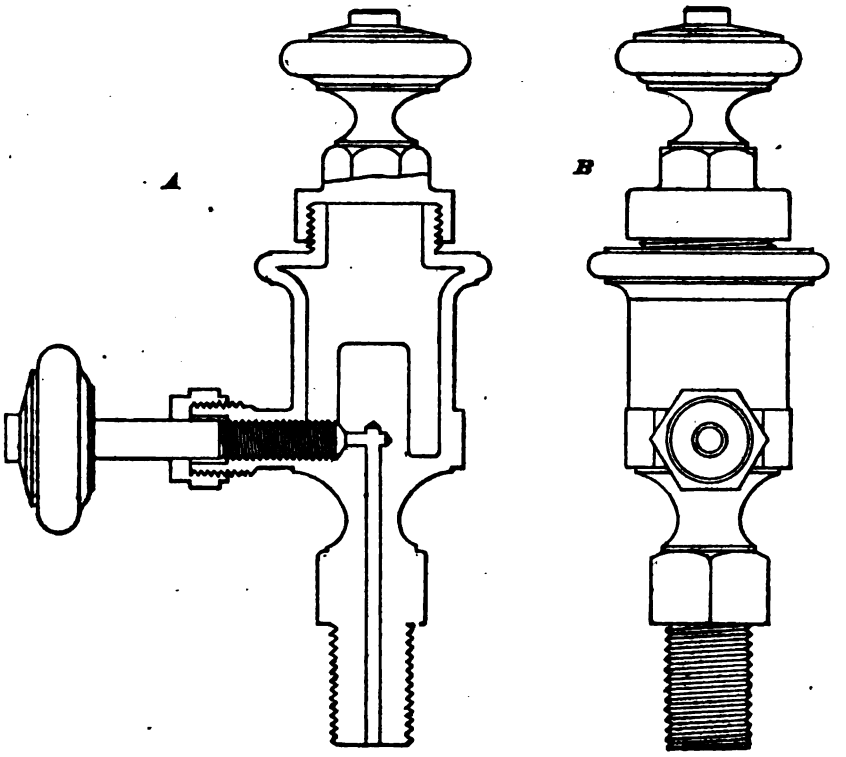

SIXTH SUBJECT.—*Mechanical drafting.*

From the following sketch and crude description make, on bristol-board, a drawing in conformity with Rules of Practice in force in the United States Patent Office:

[NOTE.—This example is designed to test applicant's ability to make mechanical drawings from sketches and specifications.]

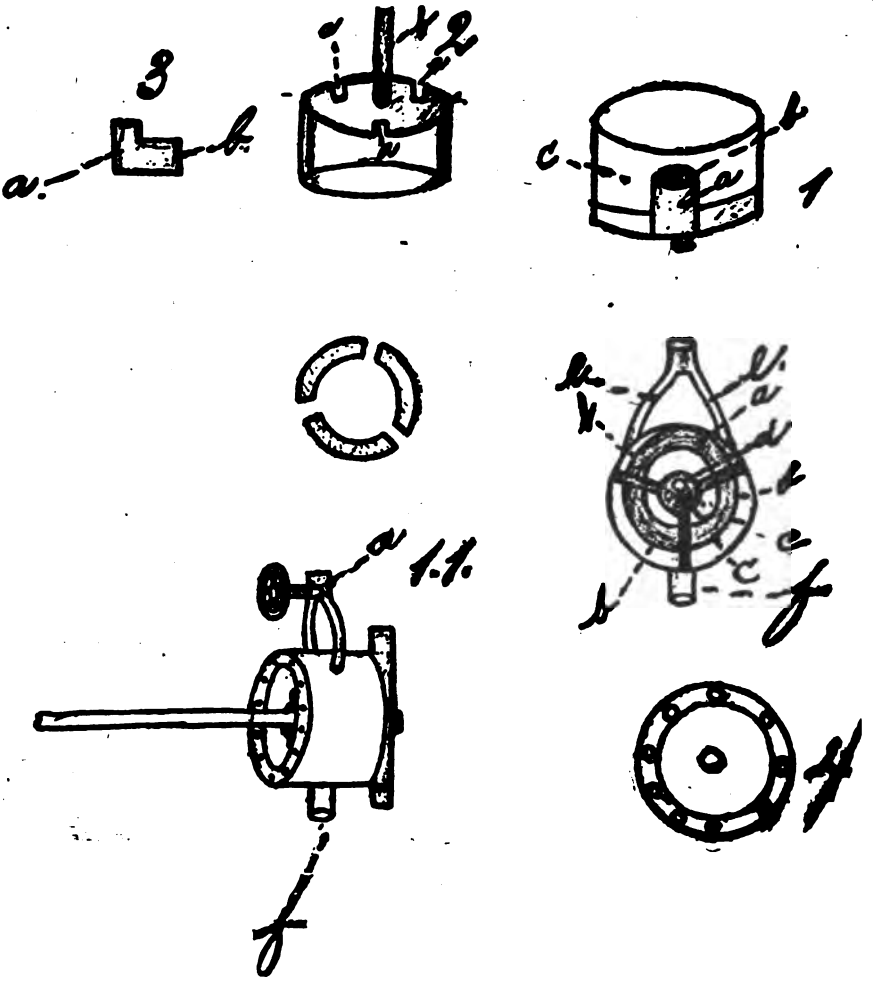

Figure 1 is a hollow cup-shaped body, having a solid round center post, *a*, reaching up to about two-thirds its height.

Figure 2 is the revolving wheel, which is also cup-shaped, and is inserted into the case (Fig. 1) reversely, its bottom resting on the center post, and as it is of a less diameter than the case it will leave a sickle-shaped space, *b b b b* (Fig. 5); it also has a shaft, *b* (Fig. 2), which passes through its center and also through the center post *a*, a little aside from its central point *d* (Fig. 5), *b* (Fig. 1) forming the axle of the motor; it also has three notches, *a a a* (Fig. 2), running from the top to the bottom to receive the paddles.

Figure 3 are the three paddles, fitting exactly in the space between the center post and the body *c* (Fig. 1) with its highest edge *a* (Fig. 3) resting against the inner surface of the case, and the lower edge against the center post.

Figure 4 is the plate to cover the revolving wheel and to close up the circular case (Fig. 1), and is held in its place by screws.

Figure 5 represents the working of the motor; the wheel *a* is moved to one side, forming the eccentric; the three paddles form four steam or water chambers *b b b b*; *c* represents the center post; *d* the circular opening for the axle; *e e* the two steam pipes; *g* the main steam-pipe; as soon as the valve *a* (Fig. 1. 1.) is opened the steam passes through one of these pipes into a chamber and the motor will be set in motion, but by reversing the faucet-like valve *a* (Fg. 1. 1.) the steam passes through the other pipe, and the motion of the motor will be almost instantly reversed, which is one of the principal qualities.

JOHN SMITH.

Witnesses:
J. B. JONES.
H. SMILAX.

DEPARTMENTAL SERVICE (Special).

WAR DEPARTMENT—QUARTERMASTER-GENERAL'S OFFICE, AND TREASURY DEPARTMENT—SUPERVISING ARCHITECT'S OFFICE.

The following formulæ were furnished to the competitors for the positions of architects and civil engineers in the Quartermaster-General's Office of the War Department and to the competitors for the positions of architects and metal constructors in the Supervising Architect's Office of the Treasury Department. See the four examinations next following:

Formulæ for safe strength of columns.

1. Cast-iron columns—

$$\text{Safe load in pounds} = \frac{13{,}330 \times \text{area in inches}}{1 + \frac{1}{500}\left(\frac{\text{length in inches}}{\text{least diameter in inches}}\right)^2}$$

2. Wrought-iron columns formed of L, T, H, or I irons—

$$\text{Safe load in pounds (approximate)} = \frac{10{,}000 \times \text{area in inches}}{1 + \frac{1}{3000}\left(\frac{1.5 \text{ length in inches}}{\text{least diameter in inches}}\right)^2}$$

3. Wooden posts—

$$\text{Safe load in pounds} = \frac{1{,}000 \times \text{area in inches}}{1 + \frac{1}{250}\left(\frac{\text{length in inches}}{\text{least diameter}}\right)^2}$$

4. Wooden beams—

$$\text{Safe load in lbs.} = \frac{\text{breadth} \times \text{depth}^2 \times 125.}{\text{span in feet.}}$$

Safe tensile strength of—

wrought iron = 12,000 lbs. per square inch.
wood = 2,000 lbs. per square inch.

Safe compression strength of—

cast-iron = 13,330 lbs. per square inch.
wrought iron = 10,000 lbs. per square inch.
wood = 1,000 lbs. per square inch.

DEPARTMENTAL SERVICE—WAR DEPARTMENT (Special—Series, No. 1).

QUARTERMASTER-GENERAL'S OFFICE—CIVIL-ENGINEER EXAMINATION.

Subjects.	Relative weights.
First: Letter writing	2
Second: Surveying	4
Third: Sanitary engineering	3
Fourth: Construction	9
Fifth: Topographic drawing	2
Total of weights	20

For explanation of the "relative weights," and of the methods of determining the "general average," see clerk examination, p. 201.

See table of formulæ next preceding this examination, p. 237.

The time allowed for this examination is limited to three days of seven hours each.

The first subject is substantially the same as the fourth subject of the clerk examination, and the fifth subject is substantially the same as the fifth subject of the topographic draftsman's examination, pp. 203 and 228.

SECOND SUBJECT.—*Surveying.*

Question 1. State method of surveying a piece of land and computing its area by triangulation.

Question 2. Describe a transit instrument and its adjustments, and state how to use it.

Question 3. What is a traverse table, and for what is it used?

THIRD SUBJECT.—*Sanitary engineering.*

Question 1. How is the inflow of fresh air and the outflow of bad air produced in a dwelling, or, in other words, how should the dwelling be ventilated?

Question 2. Sketch, with ink, detail of running trap with fresh air inlet on the main drain of a building, showing brick man-hole 4 feet in diameter.

FOURTH SUBJECT.—*Construction.*

[N. B.—One sheet of Whatman drawing paper, 10 × 15 inches, is furnished to the competitor for the sketches required by questions 2 and 3.]

Question 1. A military post containing a population of 1,000 souls and 500 animals is to be supplied with water from a neighboring stream 30 feet below the level of the ground at the post; the water supply to be stored in two wooden tanks. The ground of the post is assumed to be level and the highest building 45 feet high. Give name and description of steam-pump, approximate horse-power of boiler, and size of supply pipe and tanks necessary to furnish a sufficient supply of water to the post.

Give work in full.

Question 2. What should be the thickness at the top and base of a retaining wall 15 feet high, built of ranged rubble, to retain ordinary earth. Show your work. Make sketch of wall, including the foundation.

Question 3. Draw section through half of a road-bed 30 feet wide with side gutters, road to be covered with a metaling composed of a Telford base and a McAdam top. Scale ½ inch to 1 foot.

Question 4. Find the contents of a wedge, base 22 × 35 feet, height 12 feet, edge 16 feet.

Question 5. What is hydraulic cement; how many kinds are there, and how should it be tested?

[N. B.—One sheet of Whatman drawing paper, 15 × 20 inches, is furnished to the competitor for the drawings required by questions 6 and 7.]

Question 6. A cast-iron column 12′ high, 6″ square, carries a load of 62 tons; the column is supported on a brick pier 9′ high, resting on a bed of concrete. Calculate the thickness of metal required for column and draw section through column, pier, and concrete foundation on a scale ½″ to 1′; also draw plan of column showing footing on pier. The load on brick pier is not to exceed 10 tons per square foot; on concrete not over 5 tons, and on ground not over 2½ tons.

Question 7. A fire-proof roof is supported by iron trusses, as per diagram, the trusses are 12 feet apart, and the loads are transferred by purlins to points on rafters. Assume steady load at 30 lb. per square foot and wind-pressure at 20 lb. at right angles to rafters, and draw two strain sheets, one for steady load and one for wind-pressure, and tabulate strains, giving maximum strain on each member. Draw half of truss in detail to scale of ½″ to 1′ and show details at *a*, *b*, and *c* on scale of 1½″ to 1′.

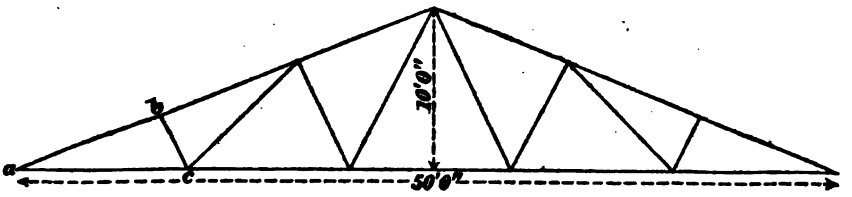

WAR DEPARTMENT (Special—Series No. 1).

QUARTERMASTER-GENERAL'S OFFICE—ARCHITECTURAL DRAFTSMAN EXAMINATION.

Subjects.	Relative weights.
First: Letter-writing	1
Second: Designing	6
Third: Architectural orders and perspective	1
Fourth: Mensuration and knowledge of materials	2
Total of weights	10

For explanation of the "relative weight," and of the method of determining the "general average," see clerk examination, p. 201. See table of formulæ next preceding the civil engineer examination, p. 237.

The time allowed for this examination is limited to three days of seven hours each.

The first subject of this examination is substantially the same as the fourth subject of the clerk examination, p. 203.

SECOND SUBJECT.—*Designing.*

[N. B.—Two sheets of Whatman drawing paper, 15 × 20 inches, are furnished to the competitor for the work required by questions 1 and 2. The specifications required by question 3 are to be written with ink on blank sheet furnished by the Commission.]

Question 1. Draw plan of first and second story of an eight-room brick cottage and give dimensions. Scale ¼″ to 1′.

Question 2. Design front of this cottage in modern style with a one-story veranda. Draw section through front wall, giving sizes of floor and roof beams and thickness of wall. Make line drawing in India ink; no shadows; windows in black. Scale ¼″ to 1′.

Question 3. Write brief specification for the cottage designed by you.

THIRD SUBJECT.—*Architectural orders and perspective.*

Question 1. Make on this sheet, with pencil or with ink, free-hand sketches, on scale of 1½" to 1', of a Roman Corinthian capital in elevation (18" neck); a Romanesque capital in perspective (16" neck).

FOURTH SUBJECT.—*Mensuration and knowledge of materials.*

Question 1. How is the principle of the parallelogram of forces applied in determining the strain on the various members of a structure?

Illustrate graphically.

Question 2. What is the width of a board 1½" thick, 16' long, and containing 12' board measure?

Question 3. How many cubic feet are there in a pier 3' 10" long by 8' 3" wide and 12' 1" high?

Question 4. How many yards of plaster are there in a room that is 16' 6" long by 14' 2" wide and 8' 9" high from floor to ceiling, after deducting the superficial area of one door 8' 3" × 3' 10" and one window 7' 2" × 3' 8"?

Question 5. What is mortar composed of, and how is it mixed?

Question 6. Name the common kinds of wood used in building?

Question 7. How should hearths be supported? Specify at least two ways.

TREASURY DEPARTMENT (Special—Series No. 1).

SUPERVISING ARCHITECT'S OFFICE—ARCHITECTURAL DRAFTSMAN EXAMINATION.

Subjects.	Relative weights.
First: Letter-writing	1
Second: Designing	5
Third: Construction	4
Total of weights	10

For explanation of the "relative weights," and of the method of determining the "general average," see clerk examination, p. 201.

See table of formulæ next preceding the civil engineer examination, p. 237.

The time allowed for this examination is limited to three days of seven hours each.

The first subject is substantially the same as the fourth subject of the clerk examination, p. 203.

SECOND SUBJECT.—*Designing.*

[N. B.—Two sheets of Whatman drawing paper, 15 × 20 inches, are furnished to the competitor for the work required by the three following questions.]

Question 1. Draw front elevation for the accompanying plan (see plan below) to a scale ½" to 1', showing outline for main features of tower, roof lines, etc. Complete elevation for vertical half of tower, including enough of entrance to show design. Show as much of cornice, windows, sill, and lintel courses, etc., as will illustrate applicant's ability in designing. Building is to be faced with stone. Show and describe class of stone-work used in design. Make line drawing in India ink.

Question 2. Make vertical section through front wall to a scale ½" to 1', showing the necessary requirements for a working drawing.

Question 3. Make details of copper cornice, showing gutter, foot of rafters, etc., to a scale of 1½" to 1'.

Ground plan for the three preceding questions and for questions 3 and 4 of the third **subject following:**

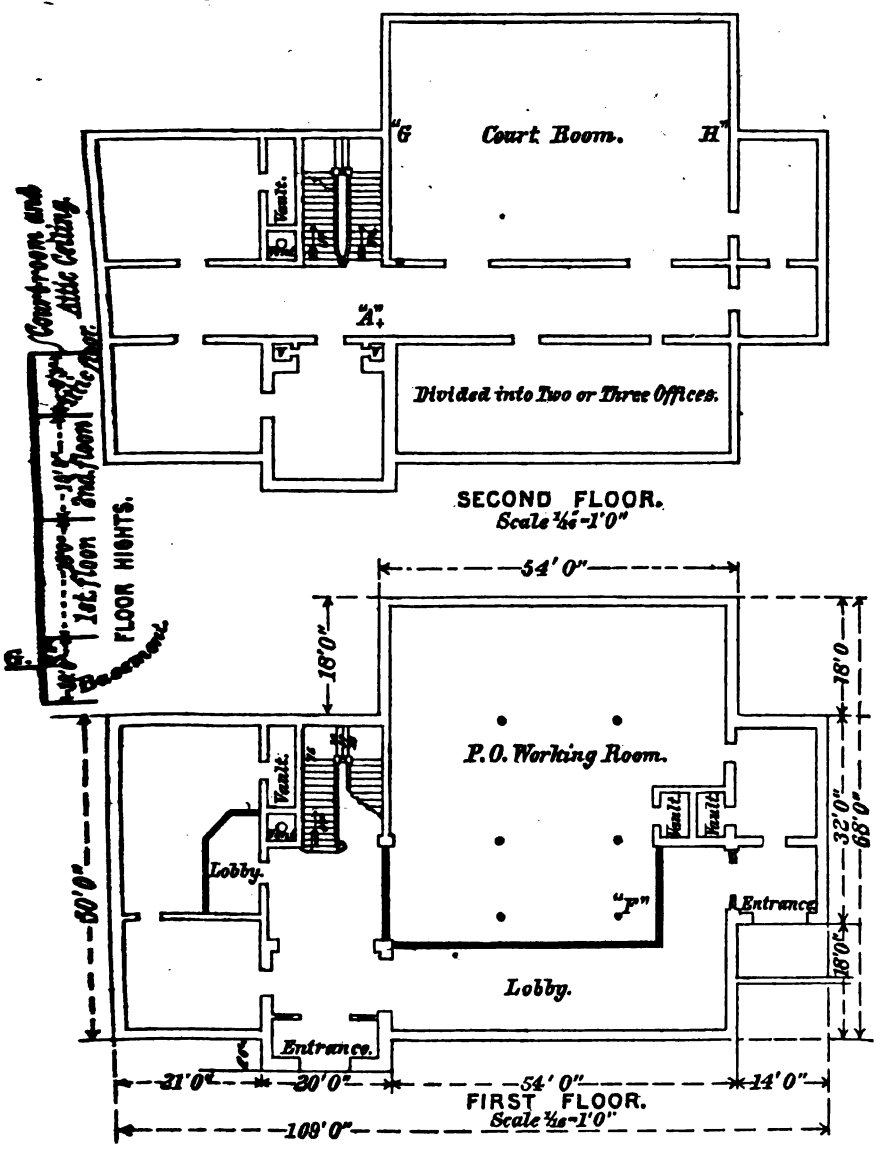

THIRD SUBJECT.—*Construction.*

[N. B.—One sheet of Whatman drawing paper, 15 × 20 inches, is furnished to the competitor for the drawing required by the three following questions. Sheet 3, containing the plan referred to in question 3, should be given to the competitor for that question.]

Question 1. Give strain on member *C D* of truss on accompanying diagram. Show which members are in compression and which are in tension. Draw detail of truss at *E* on scale of ½" to 1'.

Question 2. Draw section through column on accompanying diagram at *M*, showing least thickness of metal required, fire-proofing, etc. Draw detail of column at *J* and show construction of beams. Draw section through footing of column, stone *L*, and brick pier, and give dimensions. Drawings to be made on scale of ½" to 1'.

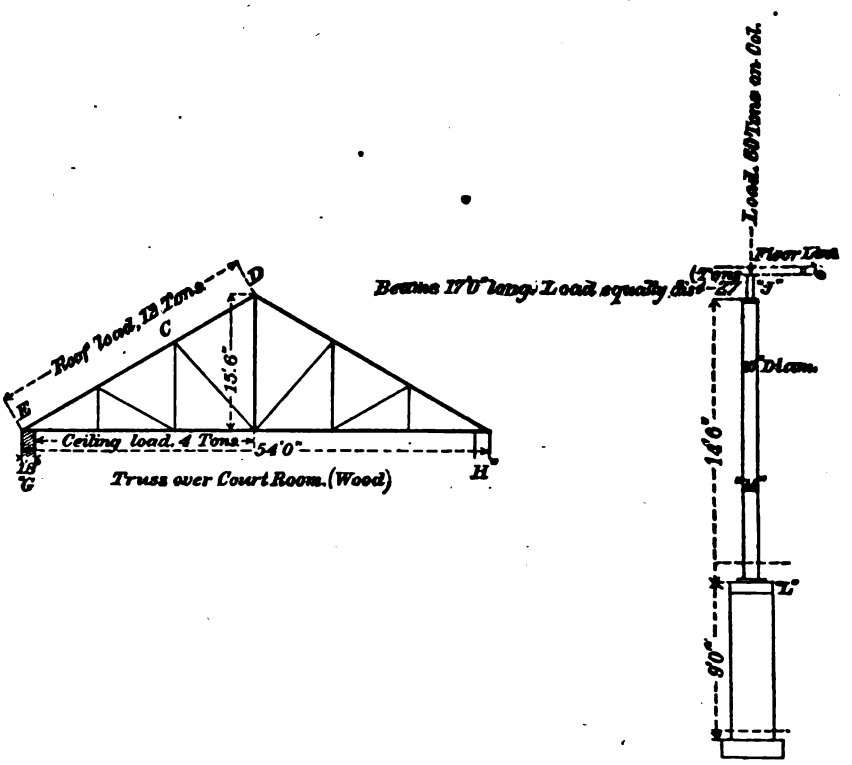

Question 3. Make a perspective drawing on scale of ½" to 1' of stairs, station at point *A* (see ground plan, above) 5' high, showing angle in corridor. No details are required in this perspective.

Question 4. Make design for a wood newel-post on scale of ½" to 1'.

TREASURY DEPARTMENT—(Special—Series No. 1).

SUPERVISING ARCHITECT'S OFFICE—CONSTRUCTOR (IN METAL) EXAMINATION.

Subjects.	Relative weights.
First: Letter-writing	1
Second: Construction in metal	4
Third: Calculations of strength of materials	5
Total of weights	10

For explanation of the "relative weights," and of the method of determining the "general average," see clerk examination, p. 201.

See table of formulæ next preceding the civil engineer examination, p. 237.

The time allowed for this examination is limited to three days of seven hours each.

The first subject of this examination is substantially the same as the fourth subject of the clerk examination, p. 203.

SECOND SUBJECT.—*Construction.*

[N. B.—One sheet of Whatman drawing paper, 15×20 inches, is furnished to the competitor for the work required by the following question.]

Question 1. A fire-proof staircase is to be constructed as per diagram, rise 6″, tread 12″, treads to be of marble, risers of cast iron, railing of wrought iron, hand-rail of wood, and staircase to be supported by wrought-iron beams (dimensions of which may be assumed). Draw framing plan on scale of ¼″ to 1′ and section through first flight on same scale; also show in detail connection of hand-rail with iron newel-post on scale 1½″ to 1′.

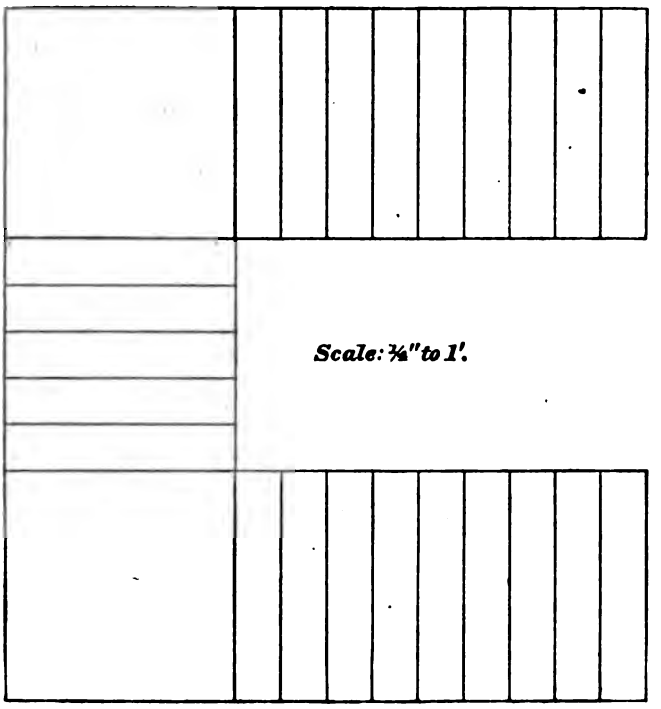

THIRD SUBJECT.—*Calculations of strength of materials.*

[N. B.—One sheet of Whatman drawing paper, 10×15 inches, is furnished to the competitor for the drawing of footings of pier and concrete bed, question 1. The calculations required by this question are made in ink, on the same sheet with the question.]

Question 1.

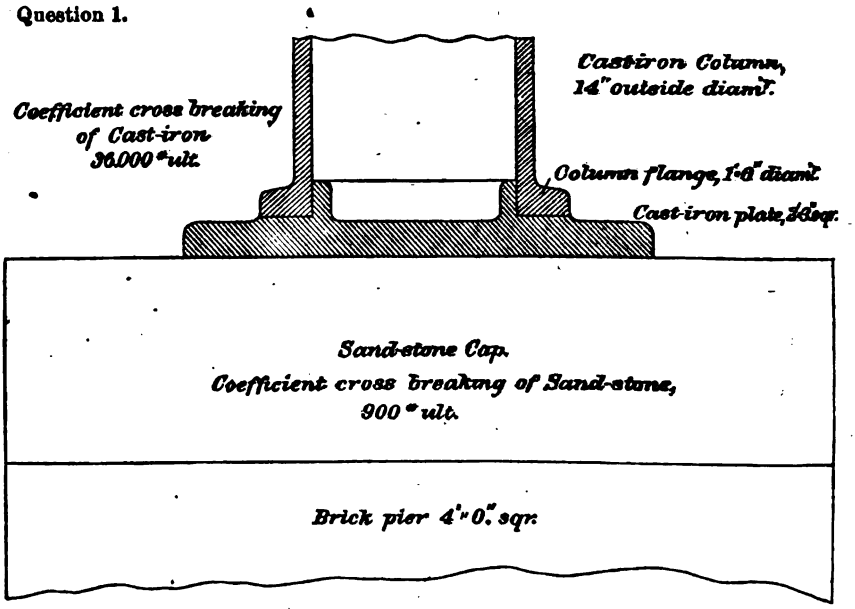

Load on column, 160 tons; column 20′-0″ high.

Calculate thickness of metal in column.
Calculate thickness of cast-iron base-plate.
Calculate thickness of sandstone cap.
} Factor of safety = 8.

Draw footings of pier and concrete bed.

Brick-work pressure on concrete not to exceed 5 tons per square foot.

Concrete pressure on soil not to exceed 3 tons per square foot (omit weight of pier in calculations).

[N. B.—One sheet of Whatman drawing paper, 15×20 inches, is furnished to the competitor for the "strain diagram" and for the drawing of "detail at A, question 2." The calculations required by this question are made in ink on the same sheet with the question.]

on 2.

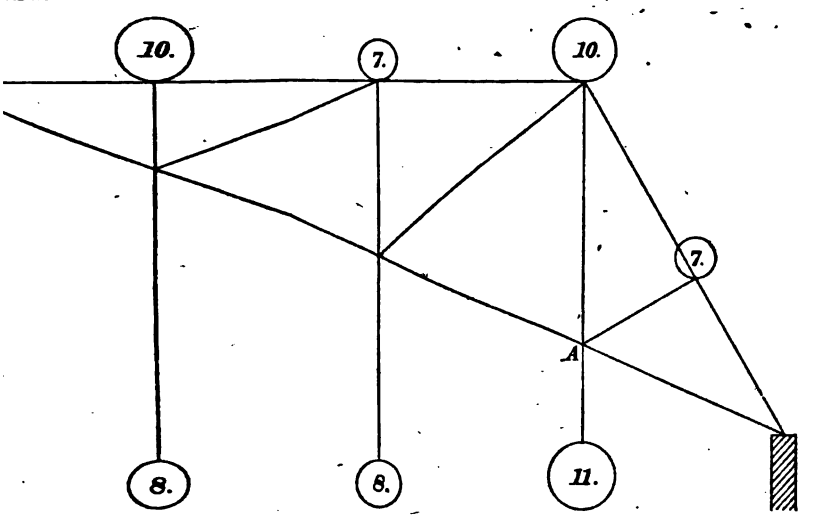

late reactions, and make strain diagram. Tabulate strains and state if in or compression.

are in tons. Graphic calculation preferred. Draw detail at A on scale of

ne sheet of Whatman drawing paper, 10×15 inches, is furnished to the competitor for the ete working drawings" of the joint, question 3. Calculations are made with ink on the same th the question.]

on 3.

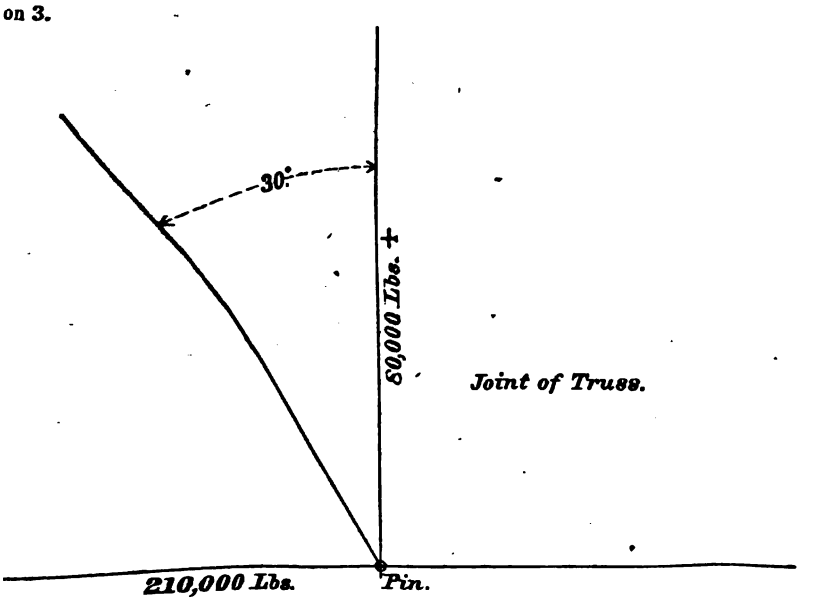

late strains not given. Make complete working drawings of this joint; pin ted. Factor of safety = 5. Post 15 feet long, both ends pin connected. Max- bending strain allowed on pin = 15,000 pounds per square inch in extreme

TREASURY DEPARTMENT—(Special—Series No. 1).

SUPERVISING ARCHITECT'S OFFICE—SANITARY EXPERT EXAMINATION.

Subjects.	Relative weights.
First: Letter-writing	1
Second: Construction and specifications	5
Third: Practical questions	4
Total of weights	10

For explanation of the "relative weights," and of the methods of determining the "general average," see clerk examination, p. 201.

The time allowed for this examination is limited to two days of seven hours each.

The first subject of this examination is substantially the same as the fourth subject of the clerk examination, p. 203.

SECOND SUBJECT.—*Construction and specifications.*

[N. B.—One sheet of Whatman drawing paper, 15×20 inches, is furnished to the competitor for the work required by question 1. A blank sheet is furnished for the specifications required by question 2, which must be written in ink.]

Question 1. Draw plan and cross-section *C D* of building and ground as per diagram, on scale of ½" to 1'; show system of plumbing and drainage of lot.

Question 2. Write brief specifications of the above plumbing work.

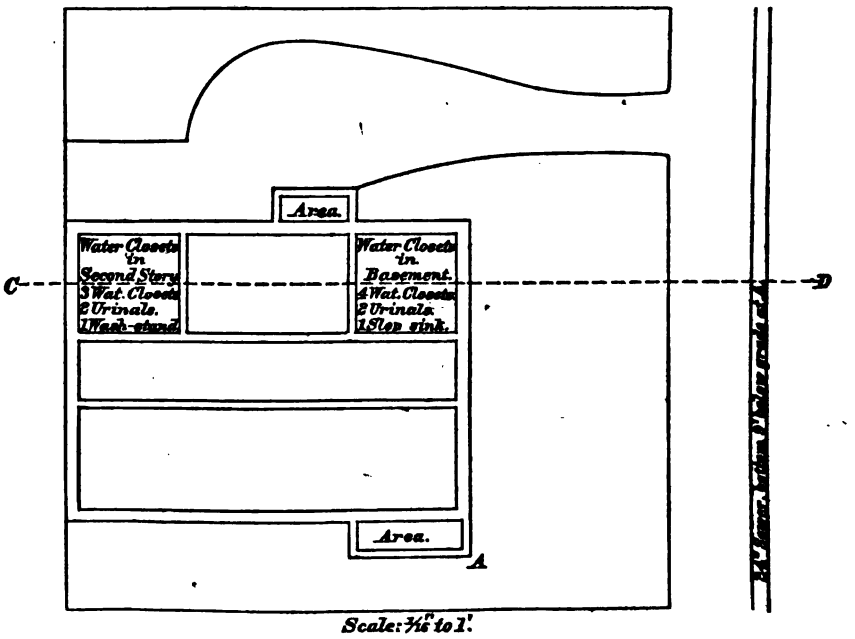

Scale: ½" to 1'.

Building two stories high, with roof of 45°; basement floor 6' below ground at *A*; ground assumed to be level.

[N. B.—One sheet of Whatman drawing paper, 10×15 inches, is furnished to the competitor for the sketches required by questions 3 and 4. The classification required by question 3 and the work required by question 5 are written in ink on the same sheet with the questions.]

Question 3. Classify the water-closets most suitable for public buildings, describe the general principles of their mechanism, and state how to ventilate them. Illustrate by sketches.

Question 4. Sketch detail of a running trap with fresh-air inlet on the main drain of a building, showing brick man-hole 4′ in diameter.

Question 5. A roof has a surface of 80′×45′; assume a rain-fall of 1¼″ per hour, and and give sizes and numbers of leaders to drain it.

THIRD SUBJECT.—*Practical questions.*

Question 1. State briefly the general systems of heating and ventilating public buildings, and describe and explain the principal appliances used for that purpose.

Question 2. Explain the plenum and vacuum system of ventilation, and describe the manner of calculating the same; aspiration, ventilation, and their arrangements to be explained in detail.

Question 3. Enumerate and describe the pipes usually employed for soil-pipes, drain-pipes, and small and large supply-pipes. State which pipes are considered best for soil-pipes, and give reasons.

Question 4. Describe the principle of local and trap ventilation as used in sanitary plumbing, and give reasons for and against trap ventilation.

COMPUTER EXAMINATION (Special—Series No. 1).

Subjects.	Relative weights.
First: Orthography	1
Second: Penmanship	1
Third: Copying	1
Fourth: Letter-writing	1
Fifth: Algebra	4
Sixth: Geometry	4
Seventh: Logarithms	4
Eighth: Trigonometry	4
Total of weights	20

For explanation of the "relative weights," and of the method of determining the "general average," see clerk examination, p. 201.

The time allowed for this examination is limited to two days of seven hours each.

The first, second, third, and fourth subjects are substantially the same as the corresponding subjects of the clerk examination, p. 201 *et seq.*

FIFTH SUBJECT—*Algebra.*

Question 1. Divide $4a^4 - 9a^3b^2 + 6ab^3 - b^4$ by $2a^2 - 3ab + b^2$.

Question 2. Find the values of x, y, and z in the equations:

$$3x + y + 2z = 23.$$
$$x - 4y + 10z = 5.$$
$$10x - 2y - 8z = 8.$$

Question 3. What is a quadratic equation?

Question 4. Find the values of x and y in the equations:

$$x^2 + 3x + y = 73 - 2xy.$$
$$y^2 + 3y + x = 44.$$

Question 5. Develop the expression $(a + x)^9$ by the Binomial theorem.

SIXTH SUBJECT.—*Geometry.*

Question 1. Define the following terms: Point, right line, curved line, angle, arc, chord and surface.

Question 2. What is the value of the sum of the three angles of any plane triangle? Give the proof.

Question 3. What are the relations of the sides of a right triangle?

Question 4. What is the ratio of the circumference to the diameter of the circle?

Question 5. What is the expression for the area of a circle?

SEVENTH SUBJECT—*Logarithms.*

Question 1. What is a logarithm? What is the base of the common system? What is the base of the Napierian system?

Question 2. Give the rule for determining the characteristic of the logarithm, of any number, in the common system, and write the characteristics of the logarithms of 60010.0; 1.0; 0.0002, and 9.18001.

Question 3. Find the *fifth* root of 0.09327, by logarithms.

Question 4. Find the continued product by logarithms of the factors 0.72734, 0.072734, 0.0072734, and 0.00072734.

Question 5. The *second* term of a geometrical progression is 1.5 and the fifth term is 2.0; find the common ratio by logarithms, and give the shortest method of finding the continued product of *fifty* terms of the series.

EIGHTH SUBJECT—*Trigonometry.*

Question 1. Define the terms, sine, cosine, tangent, and secant, and give *signs* in each quadrant.

Question 2. If the three sides of a plane triangle are 130, 140, and 150, what are the angles?

Question 3. Write the developed expressions for sin (A+B) and for sine (A—B).

Question 4. Compute the values of ρ, β, and λ from the equations:

$$\rho \cos \beta \cos \lambda = +1.27183.$$
$$\rho \cos \beta \sin \lambda = -0.98152.$$
$$\rho \sin \beta = +0.89002.$$

Question 5. Compute *twenty* values of z from the equation:

$$\tan z = k \tan (\alpha + i\beta).$$

where $\log k = 0.09091$; $\alpha = 253^\circ\ 0.0'$; $\beta = 111^\circ\ 23.7'$, and i takes all positive integral values from 1 to 20, inclusive.

(*Rapidity* as well as *accuracy* counts in the computation in this question.)

SPECIAL SUBJECT FOR THE NAUTICAL ALMANAC OFFICE AND FOR THE NAVAL OBSERVATORY—*Astronomy.*

Question 1. Define the terms: Mean solar day, sidereal day, and mean noon.

Question 2. Define the terms:

Annual Precession of a star;
Annual proper motion of a star;
Equatorial horizontal parallax; and
Plane of the meridian.

Question 3. What is the effect of refraction on the true zenith distance of a star?

Question 4. What is the *right ascension* and the *declination* of a star?

Question 5. What is meant by the terms "apparent place" and "mean place," when applied to the position of a star?

OTHER SPECIAL EXAMINATIONS FOR DEPARTMENTAL SERVICE.

Other special examinations for the departmental service are provided for by the commission as the exigencies of the service may demand, such as examinations for the positions of librarian and bibliographer, photographer, computers in the Ordnance Bureau of the War Department, ordnance draughtsman, expert in naval science and affairs, botanist, botanical microscopist, pomological clerk, vegetable pathologist, chemist, assistant engineer, etc. Such examinations are not given at the regular dates and places named upon the "schedule of examinations." They are held only when required by some Department or Bureau in Washington, and notice of time and place and of the nature of the examination is given through the public press. It is not practicable to accept and file applications for the above-named examinations, but persons who believe they are prepared to compete for any place named may furnish the commission with their names and post-office addresses, and state for which position or positions they believe themselves qualified. The commission will, so far as it is practicable to do so, inform such persons when examinations of the kind they name are appointed, and furnish them blanks on which to make formal application. The commission can not, however, hold itself responsible for a failure to notify individuals of such examinations or for the brevity of the notice which may be given, as in the nature of the case vacancies are liable to occur for which immediate provision must be made, and of which no notice can be given except through the newspapers.

SUPPLEMENTARY EXAMINATIONS.

1. "To test the fitness of applicants for admission to the classified departmental service there shall be examinations as follows:

* * * * * * * *

"*Supplementary examinations.*—For places which, in the opinion of the Commission, require, in addition to the knowledge required to pass the copyist or the clerk examination, certain technical, professional, or scientific knowledge, or knowledge of a language other than the English language, or peculiar or special skill."

Either the "clerk" or the "copyist" examination must be taken as the basis for any supplementary examination, and no person who has not previously taken one of said basis examinations will be allowed to take a supplementary examination. No separate application is, however, required for the supplementary examination, but the applicant should, at the time when he makes his application for the clerk or copyist examination, specify in the blank space provided for that purpose the kind or kinds of supplementary examinations he desires to take. He may take as many of the supplementary examinations provided for by the Commission as he wishes.

SUPPLEMENTARY EXAMINATION IN TYPE-WRITING (Series No. 3).

Competitors are required to furnish the type-writers for the examination, as the Commission can not furnish them.

Exercises.	Relative weights.
First: Tabulating	2
Second: Transcribing rough draft	3
Third: Copying and spacing	2
Fourth: Writing from dictation	3
Total of weights	10

For explanation of the "relative weights," and of the method of determining the "general average," see clerk examination, p. 201.

The time allowed for this examination is limited to three and one-half consecutive hours.

FIRST EXERCISE.—*Copying and tabulating.*

The competitor is required to write with type-writer, on a blank sheet, in tabular form, in three columns, with proper headings, the following facts, without abbreviations:

[Preliminary tests on the machine will not be permitted, but the table may be prepared with pencil or pen on scratch paper and copied in type-writing on the question sheet.]

George Washington, the first President of the United States, was a citizen of the State of Virginia, and held the office from April 30, 1789, to March 4, 1797. He was succeeded by John Adams, a citizen of Massachusetts, whose term extended from March 4, 1797, to March 4, 1801. The next three Presidents were citizens of Virginia.

viz: Thomas Jefferson, whose term extended from March 4, 1801, to March 4, 1809; James Madison, from March 4, 1809, to March 4, 1817; and James Monroe, from March 4, 1817, to March 4, 1825. Massachusetts furnished the next President, John Quincy Adams, who held the office from March 4, 1825, to March 4, 1829. Andrew Jackson, of Tennessee, was then chosen President, and served in the office from March 4, 1829, to March 4, 1837. The first President from the State of New York was Martin Van Buren, whose term extended from March 4, 1837, to March 4, 1841. William Henry Harrison, of Ohio, was the first President who died during the term of his office; his term was from March 4, 1841, to April 4, 1841. He was succeeded by John Tyler, of Virginia, who served from April 4, 1841, to March 4, 1845. James Knox Polk, of Tennessee, was the next President, and held the office from March 4, 1845, to March 4, 1849. Louisiana furnished the next President, Zachary Taylor, who held the office from March 4, 1849, until his death, July 9, 1850. He was succeeded by Millard Fillmore, of New York, who served from July 9, 1850, to March 4, 1853. The only President from New Hampshire was Franklin Pierce, whose term extended from March 4, 1853, to March 4, 1857. James Buchanan, of Pennsylvania, was the last President prior to the war of the rebellion, and his term extended from March 4, 1857, to March 4, 1861.

SECOND EXERCISE.—*Transcribing rough draft.*

This exercise is substantially the same as the third exercise—writing from rough draft—of the third subject of the copyist examination, p. 206.

THIRD EXERCISE.—*Copying and spacing.*

The competiter is required to copy the following exercise, reproducing it accurately in every particular, including punctuation and other marks, preserving the spaces between the lines and the relative positions of the lines on the sheet.

The copy furnished to the competitor is a photolithograph of a sheet which has been type-written with a machine of the same make as the one the competitor uses in the examination—a Remington No. 2, a Caligraph, or a Hammond, etc. The competitor ought, therefore, to experience no difficulty in exactly reproducing the copy put before him.

MARRIAGE LICENSE.

-State of- -County of-

The people of the State of _____ to any person legally authorized to solemnize Marriage, GREETING: You are hereby authorized to join in the holy bonds of Matrimony and to celebrate the rites and ceremonies of Marriage between Mr. _____ and M_____, according to the usual custom and laws of the State of_____, and you are required to return this license to me within thirty days from the celebration

of such Marriage, with a Certificate of the same appended thereto and signed by you, under the penalty of One Hundred Dollars.

Witness_____, Clerk of our said Court and the Seal thereof, at his office, in_____, in said County, this_____day of_____A. D. 188—.

[SEAL.]

_____

County Clerk.

State of_____, } ss.
_____ County. }

I,_____, a_____, hereby certify that, on the_____ day of_____, 188—, I joined in Marriage Mr._____, and M_____, agreeably to the Authority given in the above License, and the custom and laws of this State.

FOURTH EXERCISE.—*Writing from dictation.*

One of the examiners dictates a passage of about 175 words, which the competitor is required to write with the type-writer in a space left below the question. The passage is first read for information and then dictated in groups of five or six words. Both time and accuracy are considered in marking this exercise, and the examiner therefore reads as rapidly as the competitor may desire and indicate. The examiner gives the periods and paragraphs. Three minutes are allowed at the close of the dictation for making other punctuations. The examiner carefully notes the time—to the fraction of a minute—occupied in taking down the dictation, and records the same on the sheet, *not* including the three minutes allowed for punctuation.

The following is a sample of the passages used for this exercise:

1. This case, however, differs from most other cases. If I were to seize a boy in the street and box his ears, that would be an assault and battery; but it is a very well-known fact that on a vessel it is entirely different, while upon the water. The rules and the regulations governing a vessel give more power to the officers of a vessel than an officer would have upon dry land. Again, it has been held that the deck of a vessel is the territory of the land whence she comes, and that an American vessel upon the high seas, with her flag flying at the topmast, is a part of the territory of the United States, as far as her deck is concerned, and if a stranger dare to put his foot upon that territory he touches our soil. A child born under that flag, upon a vessel of the United States, is born upon American soil, and is a native of this country, just the same as you or I.

SUPPLEMENTARY EXAMINATION IN STENOGRAPHY (Series No. 1).

Time—letter.	Marks—letter.		Marks—speech.		General average.	
.....minutes.	1. Accuracy	.....	1. Accuracy	.....	Letter.....	.....
	2. Speed	.....	2. Speed	.....	Speech	.....
Time—speech.	Total	.....	Total	.....	Total.....	.....
..... minutes.	Average.....	.....	Average.....	.....	Average	.....

[N. B.—This examination consists of two exercises, a letter and a speech, each containing from 250 to 270 words. The dictations are given to each competitor separately. One of the examiners dictates the letter, and, after a pause of a moment or two, the speech. There is no preliminary reading of the exercises and no word is repeated, but care is taken to pronounce each word distinctly. The marks for this examination depend largely on the speed attained in taking the notes. The dictation is, therefore, given as rapidly as the competitor can take it, but not so rapidly as to confuse the competitor. Some system of signals is prearranged by which the competitor may indicate whether he wishes the examiner to dictate more or less rapidly, such as nodding the head when an increase of speed is desired and shaking the head when a decrease is desired.

The time—to the fraction of a minute—occupied in taking the stenographic notes is noted and entered by the examiner in the proper table on the sheet.

After both exercises have been dictated the competitor writes out the notes in long-hand.

One and one-half hours are allowed for the examination—for the dictations and the writing out in long-hand.]

The following are samples of the exercises used for this examination:

DICTATION EXERCISE FOR THE LETTER.

TREASURY DEPARTMENT, *April* 27, 1879.

Hon. JOHN SHERMAN,

Secretary of the Treasury:

SIR: In compliance with your request of this day to carefully examine all the correspondence between this Department and the Bank of New York National Banking Association touching the subscription of two million dollars to the four per cent. loan claimed to have been made by that bank on the 4th instant, for the purpose of ascertaining whether such subscription was made and mailed before three o'clock on that day, I have carefully examined such correspondence, and find that on that day after four o'clock a telegram was received from the bank containing such subscription.

It is not contended that that was in time, nor is any claim now made in consequence. On the same day the bank sent forward a subscription for that amount by letter, in which, after stating it had just been advised that subscriptions had been received by the Department covering the whole of the outstanding five-twenties, it adds: "We suppose there will be no question about including this subscription under the old terms. If not, please advise us by wire, that we may cancel the contracts;" referring, of course, to the contracts of the bank to deliver bonds to their subscribers.

Very respectfully,

_____,

Assistant Secretary.

DICTATION EXERCISE FOR THE SPEECH.

1. FRIENDS AND FELLOW-CITIZENS: The period for a new election of a citizen to administer the executive government of the United States being not far distant, and the time actually arrived when your thoughts must be employed in designating the person who is to be clothed with that important trust, it appears to me proper, especially as it may conduce to a more distinct expression of the public voice, that

I should now apprise you of the resolution I have formed, to decline being considered among the number of those out of whom the choice is to be made. I beg you, at the same time, to do me the justice to be assured that this resolution has not been taken without a strict regard to all the considerations appertaining to the relation which binds a dutiful citizen to his country; and that, in withdrawing the tender of service, which silence in my situation might imply, I am influenced by no diminution of zeal for your future interest, no deficiency of respect for your past kindness, but am supported by a full conviction that the step is compatible with both.

SUPPLEMENTARY EXAMINATION IN MODERN LANGUAGES.

(Series No. 1.)

[The time allowed for each examination in a modern language is two consecutive hours.]

FRENCH.

First exercise.—Translation from French to English.

Si, en effet, nous devons d'abord, dans l'école, former des hommes et des femmes à l'âme fortement trempée, notre premier souci doit être ensuite d'y former des citoyens. Or, c'est ce qu'on a complètement oublié dans notre système actuel d'enseignement. A part quelques banalités littéraires, dictées ou récitées, sur la grandeur de la France et l'amour de la Patrie, l'enfant n'entend presque jamais parler de son pays, de la constitution qui le régit, des droits qu'il sera appelé à y exercer, des devoirs corrélatifs à ces droits. Un bon élève connaîtra sur le bout du doigt le nom des douze tribus d'Israël et la règle des participes; mais cet enfant qui demain sera citoyen ou épouse de citoyen, à peine saura-t-il que la France est une République, et ce que signifient les élections pour le Sénat, pour la Chambre des députés, pour les Conseils départementaux et communaux, dont il entend parler autour de lui, auxquelles bientôt il va prendre part. Une pareille ignorance peut convenir à un régime despotique qui ne veut que brutalement ou hypocritement imposer ses volontés; elle serait en contradiction flagrante avec un régime de liberté, de discussion, d'élections libres.

Second exercise.—Translation from English to French.

But there is one other change that has, it must be admitted, done far more to increase the physical comforts of the poorest class than better food, higher wages, finer clothes. Men are no longer imprisoned for debt. No crime known to the law brought so many to the jails and prisons as the crime of debt, and the class most likely to get into debt was the most defenseless and dependent, the great body of servants, of artisans, and of laborers; those, in short, who depend on their daily wages for their daily bread. One hundred years ago the laborer who fell from a scaffold, or lay sick of a fever, was sure to be seized by the sheriff the moment he recovered and be carried to jail for the bill of a few dollars which he had run up during his illness at the huckster's or the tavern.

GERMAN.

First exercise.—Translation from German to English.

Das Ganze war disponirt worden, dass der Bär erst aufgespürt, und dann von 500–600 Bauern auf einen Halbzirkel ungefähr 100 Jägern zugetrieben werden sollte. Nachdem am bestimmten Tage alle diese Anordnungen in möglichster Stille ausgeführt und sämmtliche Leute angestellt waren, ertönte das Zeichen zum Beginn der Jagd, ein langgehaltener Waldhornton, schnell gefolgt von andern lärmenden Instrumenten und dem Geschrei der Treiber. Es dauerte nicht lange, so schallte zu meiner Rechten.

wo Herr Konesko stand, ein Schuss den Wald entlang, und dann war alles wieder ruhig. Nach einigen Minuten hörte ich von fern ein Thier ziemlich laut durch die dichten Gebüsche brechen, da die Stille eines der heitersten Octobertage nebst dem Rascheln der den Boden schon bedeckenden Blätter das Geräusch der Schritte eines jeden laufenden Thieres verdoppelte.

Second exercise.—Translation from English to German.

It may, at first sight, seem strange that, after so many years of intellectual weakness, of feeble tottering, and of blind groping, there should suddenly have appeared so great a crowd of poets and novelists, historians and essayists, following hard upon the war for independence. But the fact is merely another illustration of a great truth of which the history of every people is replete with examples, the truth that periods of national commotion, disorder, and contention are invariably followed by periods of mental activity. Whatever can turn the minds of men from the channels in which they have long been running, and stir them to their inmost depths, has never yet failed to produce most salutary and lasting results.

ITALIAN.

First exercise.—Translation from Italian to English.

Quando una nave appartenente ai cittadini di una delle parti contraenti venisse a naufragare, affondare o soffrire qualche avaria sulle coste o nei dominii dell' altra, le sarà concesso ogni assistenza e protezione nello stesso modo che si usa e costuma colle navi dello stato ove avvenne l' infortunio, permettendo alla medesima di scaricare, se è necessario, il suo contenuto, mercanzie ed effetti, e di ricaricare lo stesso contenuto o parte di esso, sènza pagare nessun diritto di sorta, eccetto quello che può essere dovuto sopra gli articoli lasciati per la consumazione.

Second exercise.—Translation from English to Italian.

The high contracting parties agree that, in the unfortunate event of a war between them, the private property of their respective citizens and subjects, with the exception of contraband of war, shall be exempt from capture or seizure, on the high seas or elsewhere, by the armed vessels or by the military forces of either party, it being understood that this exemption shall not extend to vessels and their cargoes which may attempt to enter a port blockaded by the naval forces of either party.

SPANISH.

First exercise.—Translation from Spanish to English.

5. Mas si algunos efectos, mercancías ó propiedades de los designados en las reglas primera y segunda se trasladaren á algun lugar no ocupado á la sazon por las fuerzas de los Estados Unidos; al introducirse á tal lugar, ó al venderse ó consumirse en él, quedarán sujetos á los mismos derechos que bajo las leyes mexicanas deberian pagar en tales casos si se hubieran importado en tiempo de paz por las aduanas marítimas, y hubiesen pagado en ellas los derechos que establece el arancel mexicano.

Second exercise.—Translation from English to Spanish.

This treaty shall be ratified by the President of the United States of America, by and with the advice and consent of the Senate thereof, and by the President of the Mexican Republic, with the previous approbation of its General Congress; and the ratifications shall be exchanged in the city of Washington, or at the seat of government of Mexico, in four months from the date of the signature hereof, or sooner if practicable.

(Series No. 2.)

DANISH.

First exercise.—Translation from Danish to English.

Danmarks Oer have et saa yndigt, venligt, fredsælt Udseende, at man, ved i Tankerne at gaae tilbage til deres Oprindelse, aldrig erindres om nogen voldsom Naturbegivenhed; de synes ikke ved noget Jordskjælv at vare opkastede, ei heller gjennemfurede af en väldig Vandflod, men snarere at have opdukket sagtelig af det synkende Hav. Sletterne ere jevne og store; Bakkerne faa og smaa og blidt afrundede. Ingen bratte Skränter, ingen dybe Huler minde on Jordens Fódselskamp. Skovene hänge ikke vildt paa skyhóie Fjeldrygge, men leire sig som et levende Hegn om de frugtbare Marker. Bakkene styrte sig ikke ned i skummende Fosser, gjennem dybe og mórke Klófter, men glide stille og klare hen mellem Siv og Krat.

Second exercise.—Translation from English to Danish.

The climate of Canada presents great extremes of heat and cold, especially in the lower or eastern part of the province. The seasons of spring, summer, and autumn are included between the months of May and September. In October the frosts begin, and during November and the first three weeks of December snow storms are incessant. After this period the atmosphere clears, an intense and dry frost succeeds and continues until April or May, during the whole of which time the sky is serene and of a bright azure hue. Throughout this long winter the ground is buried under a hard covering of ice and frozen snow. The snow begins to melt in April and has all disappeared by the first week of May. Summer is then fully established, and the vegetation breaks forth in profuse luxuriance.

SWEDISH.

First exercise.—Translation from Swedish to English.

Om Natur och Historia äro Källorna för att lära förstå ett folk, så är den förras inflytande märkligare på folket i gemen, den sednares på de högre Klasserna, som, satta i beröring med en större verld, af den erhålla en mångfaldigare bildning. Det är arbetaren, i sin svett sträfvande att afvinna naturen fyllnaden af lifvets första, enklaste behof, som också mest får erfara, att hon i Norden, ehuru belönande omtankan och fliten, likväl aflagt alla dragen af en klemande mor, som ger mycket och fordrar litet. Blott ett härdadt, arbetsamt, förståndigt slägte kunde bebo Skandinaviens dalor och berg, eljest vore det fäloradt; och äfven vår historia återför tankan till den moraliska spänstighet och kraft, som sjelfva det nordiska lefnadssättet utvecklar och underhållar.

Second exercise.—Translation from English to Swedish.

Within doors the travelers were warm, the houses being close, the walls thick, the lights small, and the glass all double. Their food was chiefly the flesh of deer, cured in the season, bread good enough, but baked as biscuit, dried fish of several sorts, and occasionally pieces of mutton and buffalo, which is pretty good meat. All the stores of winter provisions are laid up in summer. Their drink was water mixed with a little spirit, and for a treat, wine instead of beer, which, however, the people possess of good quality. The hunters, who venture abroad in all weather, frequently brought in fine venison, and sometimes bear's flesh, which, however, was not much esteemed. The visitors had a good stock of tea, with which they treated their friends, and they lived cheerfully and well, all things considered.

SUPPLEMENTARY EXAMINATION IN LAW (Series No. 1).

[This examination consists of two subjects of equal weight—government and law—and is limited in time to three consecutive hours.]

FIRST SUBJECT.—*Government.*

Question 1. What is a republican form of government?

Question 2. When did the present Constitution of the United States go into effect?

Question 3. Into what co-ordinate branches is the Government of the United States divided, and what are the principal functions of each?

Question 4. In what ways may the Constitution of the United States be amended?

Question 5. How may a bill vetoed by the President become a law?

Question 6. To what classes of cases does the judicial power of the Supreme Court of the United States extend?

Question 7. What are some of the powers given by the Constitution to Congress?

SECOND SUBJECT.—*Law.*

Question 1. What is meant by (1) common law; (2) statute law; (3) municipal ordinance?

Question 2. Define dower at common law, and state the distinction between dower and jointure.

Question 3. What is title in fee-simple?

Question 4. What are the distinctions between a corporation and a partnership?

Question 5. What is a common carrier?

Question 6. State the difference between *quo warranto* and *mandamus*.

Question 7. What is meant by *res adjudicata* and *stare decisis*?

Question 8. What are the leading rules for the interpretation of statutes?

Question 9. What is a contract?

Question 10. State the general rule as to the responsibility of a principal for the acts of his agent.

SUPPLEMENTARY EXAMINATION IN PROOF-READING.

Subjects.	Relative weights.
First: Practical questions	3
Second: Correction of proof	7
Total of weights	10

For explanation of the "relative weights," and of the method of determining the "general average," see clerk examination, p. 201.

The time allowed for this examination is limited to four consecutive hours.

The first subject of this examination—practical questions—contains questions in orthography, syntax, punctuation, marks (punctuation, accent, sound, and proof-reader's marks), also in regard to kinds of type, imposing of forms, implements of the printer's art, etc.

The second subject—correction of proof—consists of three exercises in practical proof-reading.

SECOND BRANCH OF CLASSIFIED SERVICE—CUSTOMS SERVICE.

CLERK EXAMINATION (Series 2).

Subjects.	Relative weights.
First: Orthography	2
Second: Penmanship	4
Third: Copying	3
Fourth: Letter-writing	3
Fifth: Arithmetic	5
Sixth: Elements of book-keeping and of accounts	2
Seventh: Elements of geography, history, and government of the U. S.	1
Total of weights	20

For explanation of the "relative weights," and of the method of determining the "general average," see clerk examination, p. 201.

The time allowed for the examination is limited to seven consecutive hours.

The first, second, third, and fourth subjects of the clerk examination, customs service, are substantially the same as the corresponding subjects in the clerk examination, departmental service, and the seventh subject is substantially the same as the eighth subject of that examination, p. 201, *et. seq.*

FIFTH SUBJECT.—*Arithmetic.*

Question 1. Add the following, placing the total at the bottom:

5,673,911,987 87
44,376,013,705 90
32,673,231,695 25
7,736,910,286 16
6,444,642,155 14
44,297,763,429 39
26,105,321,266 57
9,708,132,873 63
8,856,764,397 49
42,231,001,161 86
63,497,476,084 03
123,435,602,002 90

Express in figures the following numbers:

Question 2. One hundred and one million one thousand and ten.

Question 3. Three hundred and forty-three million ten thousand and one, and one ten-thousandth.

Express in words the following figures;

Question 4. 3,000,600.

Question 5. 200,002,002.00025.

Question 6. A grocer having a capital of $10,000 invested $\frac{1}{2}$ of it in tea, at $\frac{8}{10}$ of a dollar per pound; $\frac{4}{10}$ of the remainder in coffee, at $\frac{1}{2}$ of a dollar per pound, and $\frac{4}{11}$ of the rest in sugar at $5\frac{3}{16}$ cents per pound. What quantity of each did he buy, and how much money had he left?

Give work in full in common fractions.

Question 7. A dealer exported 374.319 bushels of corn, receiving in exchange coal at the rate of 1 ton of coal for 15.124 bushels of corn. How much coal did he receive?

Give work in full in decimal fractions.

Question 8. A merchant imported 120 tons of English iron, costing 1¼ pence per pound, on which he paid a duty of 20 per cent. The freight was 5 shillings sterling per ton. What was the total cost in U. S. currency? (The ton equals 2,240 lbs. The pound sterling equals $4.8665.)

Give work in full.

Question 9. The interest of $39,000.00 for 3 years 1 month and 18 days is $8,554.00. What is the rate per cent. per annum?

Give work in full.

Question 10. What is the difference between the true and the bank discount of $7,000 payable in 7 months at 6 per cent.

Give work in full.

SIXTH SUBJECT.—*Elements of book-keeping and of accounts.*

Exercise.—Samuel Adams, a contractor, had the following dealings with the Treasury Department: He furnished, January 3, 1883, 2,575 lb. of twine, at 12 cents a lb.; April 4, '83, 25 doz. gold pens, at $25 a doz.; May 7, '83, 645 reams letter-paper, at $2 a ream; July 9, '83, 45 doz. qt. Arnold's ink, at $3 a doz.; October 30, '83, 1,000,000 envelopes, at $2 a thousand; and December 5, '83, 8 doz. inkstands, at $1.97 a doz. He was paid cash as follows: February 4, 1883, $175; April 30, $350; July 15, $700; November 5, $2,300; and December 31, 1883, he was allowed on settlement $45 for cartage, and charged $75 for breakage and $60 for shortage on envelopes. State his account in the blank below, with proper heading, and show the balance, if any, due him.

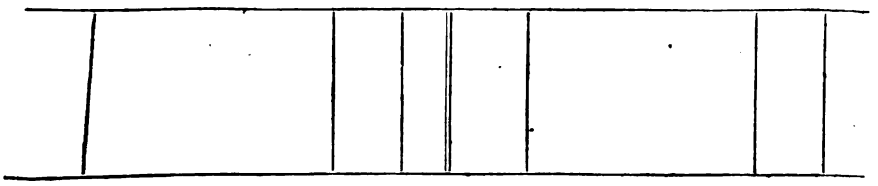

DAY INSPECTOR EXAMINATION (Series 7).

Subjects.	Relative weights.
First: Orthography	2
Second: Penmanship	5
Third: Copying	5
Fourth: Arithmetic	5
Fifth: Geography of America and Europe	3
Total of weights	20

For explanation of the "relative weights," and of the method of determining the "general average," see clerk examination, departmental service, p. 201.

The time allowed for this examination is limited to five consecutive hours.

The first, second, and third subjects of the day inspector examination, customs service, are substantially the same as the corresponding subjects in the clerk examination, departmental service, p. 201, *et. seq.*

FOURTH SUBJECT.—*Arithmetic.*

Question 1. Add these across, placing the totals in the spaces provided, and find grand total:

			Totals.
9277	3185	2054	.....
1326	8520	5291	.....
2657	5878	5212	.....
5281	3535	8841	.....
23496	33285	2479	.....
15725	2165	2957	.....
3013	4425	4869	.....
8890	31715	1789	.....
504	2074	4131	.....
6284	290	3152	.....
770	7291	87247	.....
13323	7400	329	.....
491	3	33001	.....
978	1940	535	.....
19	486	1405	.....
856	2718	6	.....
769	210	7457	.....
28923	71614	892	.....
	Grand total		.....

Question 2. Express the following in words: 10,111,303.0125.

Question 3. Express the following in words: $1,405,090.625.

Question 4. Express in sign and figures one million one thousand and ten dollars and twenty cents.

Question 5. What is the sum of 7752.5 + 775.75 + 77.625 + 7.6625 +. 66625 ?

Give work in full.

Question 6. Divide $\frac{1}{2}$ of $4\frac{1}{2}$ by $\frac{3}{4}$ of $\frac{1}{2}$.

Give work in full, and reduce fraction to its lowest terms.

Question 7. A merchant purchased 3 hhd. wine at 50 cts. per gal. He lost by leakage, from one hhd. 10 %, from another 5 %, and from the other 4 % of the quantity. He sold the remainder at 20 cts. per qt. Did he gain or lose by the transaction, and how much ?

Give work in full.

Question 8. If a laborer received for his services $2.75 per day, exclusive of Sundays, during the year 1887, and paid $175 per year for house rent, $1.10 per day for provisions, $8 per month for fuel and lights, $6.50 per month for clothing for self and family, and 25 cts. per day for incidentals, how much had he left at the close of the year ?

Give work in full.

Question 9. Five lots of coal, containing, respectively, $43\frac{1}{4}$ tons, $38\frac{1}{2}$ tons, $45\frac{1}{8}$ tons, $33\frac{1}{2}$ tons, and $66\frac{1}{8}$ tons, were divided equally among five dealers. How much did each receive ? (Ton = 2,240 lbs.)

Give work in full, and express answer in tons, hundred-weights, and quarters.

Question 10. What will it cost to carpet a room 13 feet long and 18 feet wide with carpeting $\frac{3}{4}$ yd. wide at $1.25 per lineal yard ?

Give work in full.

FIFTH SUBJECT.—*Geography.*

[N. B.—The first five and the eighth questions of this subject are substantially the same as the United States geography of the eighth subject of the clerk examination, departmental service, p. 265.]

Question 6. In what foreign country is each of the following-named commercial cities ? Lisbon, Bremen, Londonderry, Bombay, Bordeaux.

Question 7. In what grand geographical division is each of the following-named foreign states or countries ? Peru, Guatemala, Austria, Ireland, Nova Scotia.

Question 9. Give the names of two important seaports on each of the following-named bodies of water: Black Sea, Mediterranean Sea, English Channel, Irish Sea, Straits of Dover.

Question 10. To what foreign power does each of the following-named countries, *islands, or* provinces belong ? Australia, Cuba, Java, India, Cape Colony.

NIGHT INSPECTOR EXAMINATION (Series 6).

[This examination is used also for the examination of applicants for the position of opener and packer, messenger, watchman, or usher.]

Subjects.	Relative weights.
First: Orthography	2
Second: Penmanship	3
Third: Copying	3
Fourth: Arithmetic	2
Total of weights	10

For explanation of the "relative weights," and of the method of determining the "general average," see clerk examination, departmental service, p. 201.

The time allowed for this examination is limited to five consecutive hours.

The first, second, and third subjects of this examination are substantially the same as the corresponding subjects of the clerk examination, departmental service, p. 201 *et seq.*

FOURTH SUBJECT.—*Arithmetic.*

Question 1. Add the following, placing the total at the bottom:

$1,811,187.87
3,705.90
675.25
10,289.16
742,155.74
429.39
6,873.68
397.49
1,956,374.20

Question 2. A merchant purchased twenty-seven hundred and nine gallons of wine, from which he sold one hundred and fifty-seven gallons two quarts and one pint. How much had he left?

Give work in full.

Question 3. A merchant bought 21 barrels of flour at $7.85 a barrel, and 906 yards duck at $0.32 a yard. He sold the flour at $8.35 a barrel and the duck at $0.28 a yard. Did he gain or lose by the transactions, and how much?

Give work in full.

Question 4. Write in words the following number: 10,501,045.

Question 5. Write in words the following amount: $11,103,025.375.

Question 6. If the average daily receipts of the United States Treasury for the year 1882, Sundays included, were $1,436,906.77, what were the gross receipts of that year?

Give work in full.

Question 7. If 99 bars of iron cost $330, what will one bar cost?

Give work in full.

Question 8. What will be the duty on 10 bales of silk, each weighing 650 lb. gross, at 40 cents per pound?

Give work in full.

Question 9. At $3.25 per day how much will an opener and packer earn during the year 1887, excluding Sundays?

Give work in full.

Question 10. Express in sign and figures ten million ten thousand and ten dollars and twenty-five cents.

INSPECTRESS EXAMINATION—(Series 3).

Subjects.	Relative weights.
First: Orthography (abbreviations)	1
Second: Penmanship	5
Third: Copying	2
Fourth: Arithmetic	2
Fifth: Geography of America and Europe	2
Total of weights	10

For explanation of "relative weights," and of the method of determining the "general average," see clerk examination, departmental service, p. 201.

The time allowed for this examination is limited to five consecutive hours.

The first, second, and third subjects of this examination are substantially the same as those of the clerk examination, departmental service, p. 201 *et seq.*, except that the first subject consists of an exercise in writing abbreviations. For this exercise the examiner pronounces the words and the competitor is required to write the authorized abbreviations.

The fifth subject of this examination—geography of America and Europe—is substantially the same as the fifth subject of the day inspector examination, p. 260.

FOURTH SUBJECT.—*Arithmetic.*

Question 1. Add the following across, placing the totals in the spaces provided, and find grand total.

			Totals.
309	1827	2503	.....
207	7520	5391	.....
2657	8984	7272	.....
7777	6575	2488	.....
23472	3285	2499	.....
5755	2765	2357	.....
713	4426	4869	.....
8890	515	3689	.....
564	2094	1074	.....
6284	290	7997	.....
325	3400	329	.....
491	9399	5001	.....
9978	940	535	.....
70	614	2802	.....
	Grand total....		.....

Question 2. Express the following in sign and figures:

Ten thousand one hundred and one dollars and twelve and one-half cents.

Question 3. Express in words the following figures and abbreviations: 10 cwt., 2 qr., 20 lb., 8 oz.

Question. 4. Express the following in figures:

MDCCCLXI. XIX. XCIV.

Question 5. Divide a week (of 7 days) into eleven equal parts, expressing the answer in hours, minutes, and seconds.

Give work in full.

Question 6. At $1.66⅔ per yard, what will it cost to lay one width of carpeting through a passage-way 72 feet in length?

Give work in full.

Question 7. Add 1.625 and 4.4375.

Give work in full.

Question 8. What is the difference between the amounts received in one year by two employés in the customs service, one of whom received $75 per month and the other 25 cents per hour, working 10 hours per day and 308 days in the year?
Give work in full.

ASSISTANT WEIGHER EXAMINATION (Series 5).

Subjects.	Relative weights.
First: Orthography	1
Second: Penmanship	2
Third: Copying	3
Fourth: Arithmetic	4
Total	10

For explanation of the "relative weights" and of the method of determining the "general average," see clerk examination, departmental service, p. 201.

The time allowed for this examination is limited to five consecutive hours.

The first, second, and third subjects of this examination are substantially the same as the corresponding subjects of the clerk examination, departmental service, p. 201 *et seq.*

SECOND SUBJECT.—*Arithmetic.*

Question 1. Add the following, placing the total at the bottom:

$95,673,917,987.88
34,376,013,705.80
32,673,231,698.25
9,746,910,286.16
642,855.24
26,195,328,266.57
182,873.63
8,956,864,397.49
9,048,307,000.33

Question 2. Express the following in figures: Ten million three thousand and one.

Question 3. Express the following in sign and figures:
One million one hundred and ten dollars and sixty-two and one-half cents.

Question 4. Express the following sign and figures in words:
$10,500.75.

Question 5. Express the following signs, abbreviations, and figures in words:
£225 5*s.* 3*d.*

Question 6. A coal dealer sold to a grocer 5 tons of coal at $6.75 per ton, and took in payment therefor 10 lb. coffee, at 37½ cts. per lb.; 2 lb. tea, at 75 cts. per lb.; 20 lb. sugar, at 7½ cts. per lb.; 5 lb. butter, at 42 cts. per lb., and the balance in cash. What amount did he receive in cash?
Give work in full.

Question 7. The standard wine gallon of the United States contains 231 cubic inches. How many cubic inches are there in 1 hhd. 1 bbl. and 2 qt.?
Give work in full.

Question 8. At 37½ cts. per sq. yd. how much will it cost to paint the outside of a tight board fence 6 feet high around a field 200 feet long by 150 feet wide?
Give work in full.

Question 9. A merchant purchased 50 bushels apples at $1.50 per bush. He sold one-fourth of them, being damaged, at 20 cts. per peck, and the balance at 50 cts. per peck. Did he gain or lose by the transaction, and how much?

Give work in full.

Question 10. If a laborer received $900 for his services during the year 1887, what was his average daily pay, including Sundays?

Give work in full, and carry the answer to two decimal places.

OTHER SPECIAL CUSTOMS EXAMINATIONS.

Other special customs examinations are held as the exigencies of the service require, such as those for examiners of merchandise, examiners of woolen goods, examiners of drugs, and examiners of other special classes of goods; also law clerks, assistant gaugers, marble measurers, etc. Examinations of the character here described are not always held at the regular semi-annual examinations, on the first Tuesdays of April and October, but may be held on said days or at such times as the needs of the service require. Persons who have applications on file for these positions will be informed when special examinations are held.

THIRD BRANCH OF CLASSIFIED SERVICE—POSTAL SERVICE.

CLERK EXAMINATION (Series 20).

Subjects.	Relative weights.
First: Orthography	2
Second: Penmanship	1
Third: Copying	2
Fourth: Letter-writing	1
Fifth: Arithmetic	2
Sixth: Geography	2
Total of weights	10

For explanation of the "relative weights," and of the method of determining the "general average," see clerk examination, departmental service, p. 201.

The time allowed for this examination is limited to six consecutive hours.

The first, second, third, and fourth subjects of the clerk examination, postal service, are substantially the same as the corresponding subjects of the clerk examination, departmental service, p. 201, *et. seq.*, except that the first subject includes an exercise in abbreviations, which is substantially the same as the corresponding exercise in the inspector examination, Post-Office Department, p. 218 *et seq.*

FIFTH SUBJECT.—*Arithmetic.*

Question 1. Express in words the following: 990,050,006.0021.

Question 2. Express in figures the following, avoiding the use of common (or vulgar) fractions:

One million three thousand seven hundred and one and one ten-thousandth.

Question 3. Express in words the following signs and figures: 20 lb. 8 oz. @ 2c. per oz. = $6.56.

Question 4. If a railroad car run 41½ miles per hour, how far would it go in 12 days, running 10½ hours per day.

Give work in full.

Question 5. If paper is worth 40 cents per pound, what is the cost of one sheet of paper weighing six pounds to the ream? (480 sheets = 1 ream.)

Give work in full.

Question 6. The following table shows, in part, the amounts appropriated for and the amounts expended in the office of the First Assistant Postmaster-General for the year ended June 30, 1886. Required: (1) the total amount expended, (2) the total amount appropriated, and (3) the unexpended balance:

Items.	Amounts expended.	Amounts appropriated.
Postmasters' salaries	$11,348,178.17	$12,300,000.00
Clerks' salaries	4,977,663.47	5,150,000.00
Carriers' salaries, &c.	4,312,290.70	4,485,000.00
Wrapping paper	28,766.49	35,000.00
Totals		
Total expenses brought down		
Unexpended balance		

Question 7. Three gross of lead pencils are divided equally among the clerks in a post-office, giving to each clerk eleven and leaving a remainder of fourteen pencils. How many clerks are there in the office?

Give work in full.

Question 8. Find the value of each of the following items and total value of the whole:

28,155 one-cent stamps.....$
3,200 two-cent " .....
12,200 five cent " .....
25,500 one-cent stamped envelopes @ $11.30 per M.....
31,500 two-cent stamped envelopes @ $21.30 per M.....

Total .....$

Question 9. An office uses 98 pounds of twine per year in tying packages. Allowing 178 yards to the pound, how many packages are tied if each requires an average of 1½ feet?

Give work in full.

Question 10. Multiply 693.6 by 785.09 and divide the product by 25.

Give work in full.

SIXTH SUBJECT.—*Geography.*

[N. B.—The first, second, third, fifth, seventh, and eighth questions of this subject are substantially the same as the geography questions of the eighth subject of the clerk examination, departmental service, p. 205.

Question 4. Name two of the most important railroads in the United States and four of the most important cities on each line.

Question 6. Name an important railroad center on each of the following-named rivers, and the State in which each of the required railroad centers is situated:

River.	Railroad center.	State.
Connecticut		
Susquehanna		
Ohio		
Mississippi		
Missouri		

Question 9. Name five cities or important towns in this State and give the county (or parish, if in Louisiana) in which each city or town named is situated. (For examination at Washington name cities or towns in Maryland or Virginia.)

Question 10. Name five of the principal public buildings, hotels, or public schools in this city, and give the street on which each building named is located.

CARRIER EXAMINATION (Series 21).

Subjects.	Relative weights.
First: Orthography	1
Second: Penmanship	1
Third: Copying	1
Fourth: Arithmetic	1
Fifth: Local delivery	3
Sixth: Reading addresses	3
Total of weights	10

For explanation of the "relative weights," and of the method of determining the "general average," see clerk examination, departmental service, p. 201.

The time allowed for this examination is limited to five consecutive hours.

The first subject of this examination is substantially the same as the corresponding subject of the inspector's examination, customs service, p. 259, and the second and third subjects are substantially the same as the corresponding subjects of the clerk examination, departmental service, p. 201, and the sixth subject is substantially the same as the eighth subject of the clerk examination, railway mail service, p. 271.

FOURTH SUBJECT.—*Arithmetic.*

Question 1. Express in sign and figures seventy-two million five thousand and eighty-two dollars ten cents and two and one-half mills.

Question 2. Express in words the following: 5,312,209.521.

Question 3. Express in words the following: 10 mi. 8 fur. 640 rd. 1,760 yd. 10,560 ft. 6 in. = 16 mi. 6 in.

Question 4. A carrier makes 4 trips a day, carrying 64 letters and 32 papers each trip. The letters average in weight ½ oz. each and the papers 2 oz. each. How many pounds of mail does he deliver in a day? (16 oz. to the pound.)

Give work in full.

Question 5. Multiply 26.32 by 3, and to the product add 2.04.

Give work in full.

Question 6. Add the following, placing the sum at the bottom:

5,321,792.18
359,212,175.75
11,515,666.66
2,919,286,554.55
115.25
999,510.45
4,786,452,369.38
29,236,111,522.73
75,775,016.15
90,187,236,541.02

Question 7. A carrier delivers in one day 254 letters, 423 papers, and 27 packages. Each letter has on it a two-cent stamp, each paper a one-cent stamp, and each package a four-cent stamp. How much would the Government make or lose on this mail, supposing the whole cost of transportation and delivery to be $11.42?

Give work in full.

Question 8. A carrier walks a distance of 20 squares each trip, each square being 400 feet in length. If he advance 20 inches each step, how many steps will he take on the trip?

Give work in full.

Question 9. A carrier who makes 1,200 trips a year rides on the street cars twice every trip, the fare being five cents a ride. What is the cost of street-car fare for the year?

Give work in full.

Question 10. In an office employing 35 carriers, each carrier loses 20 minutes a day in idle talk. Suppose the average salary of each to be $2.50 for ten hours' work, what is the cost to the Government of the lost time each day, and what will it amount to in a year of 313 working days?

Give work in full.

FIFTH SUBJECT.—*Local delivery.*

Question 1. Name the principal railroads (not exceeding five) which pass through or terminate in this city, and give the location (the street or streets on which situated) of the principal depot or ticket office of each.

Question 2. Name four streets which pass nearest to the building in which this examination is held, and mention one public building or prominent business house on each.

Question 3. Name the principal hotels in this city (not exceeding five), and give the location (street or streets on which situated) of each.

Question 4. Name some street or streets by which one could pass from the extreme northern to the extreme southern portion of this city, and mention five prominent buildings, places, or parks which would be passed on the route given.

Question 5. Name a street-car line (or connecting lines) by which one could travel nearly or quite across this city, and name the principal streets over which it or they pass.

MESSENGER EXAMINATION (Series 7).

[This examination is used also for the examination of applicants for the position of porter, pilot, stamper, or junior clerk.]

Subjects.	Relative weight.
First: Orthography	2
Second: Penmanship	2
Third: Copying	4
Fourth: Arithmetic	2
Total of weights	10

For explanation of the "relative weights," and of the method of determining the "general average," see clerk examination, departmental service, p. 201.

The time allowed for this examination is limited to five consecutive hours.

The first subject of this examination is substantially the same as the first subject of the inspectress examination, customs service, p. 262, and the second and third subjects are substantially the same as the corresponding subjects of the clerk examination, departmental service, p. 201, *et. seq.*

FOURTH SUBJECT.—*Arithmetic.*

Question 1. Add the following, placing the total at the bottom:

210,286.36
188,763,129.37
490,206.57
6,433,132,873.68
8,856,764,397.49
563,097,579,084.03
3,235,602,007.70

=========

Question 2. The area of New Hampshire is 5,955,200 acres; the area of South Carolina, 19,564,800 acres, and the area of Pennsylvania, 28,937,600. By how much does the area of Pennsylvania exceed the areas of New Hampshire and South Carolina combined?

Give work in full.

Question 3. During the year 1886 a postmaster rented a building at the rate of $100 a month, and paid two clerks $45 each per month, and had left out of his annual salary $200. What was his salary?

Give work in full.

Question 4. Write in words the following numbers and abbreviations: 903,014 lb. & 15 oz.

Question 5. Write in figures the following number: One million twenty-three thousand and five.

Question 6. A mail package contains 4,992 letters averaging one-half ounce each. How many pounds of mail in the package?

Give work in full.

Question 7. The postmaster at Pittsfield, Mass., made requisition for 98 sheets of 1-cent stamps, 54 sheets 2-cent stamps, 32 sheets 3-cent stamps, 12 sheets 5-cent stamps, and 6 sheets 10-cent stamps. What was the total value of the stamps required, each sheet containing 100 stamps?

Give work in full.

Question 8. The total weight of a newspaper mail is 918 pounds. What is the weight in ounces?

Give work in full.

Question 9. Write in sign and figures: Eight hundred and twenty-five thousand and twenty-five dollars and seven cents.

Question 10. A postmaster buys 5 gross of pencils for $21.60. What is the cost of each pencil?

Give work in full.

FOURTH BRANCH OF CLASSIFIED SERVICE—RAILWAY MAIL SERVICE (Series 1).

CLERK EXAMINATION.

Subjects.	Relative weights.
First: Orthography	1
Second: Penmanship	1
Third: Copying	2
Fourth: Letter-writing	1
Fifth: Arithmetic	2
Sixth: Geography of the United States	4
Seventh: Railway and other systems of transportation in the U. S	5
Eighth: Reading addresses	4
Total of weights	20

For explanation of the "relative weights," and of the method of determining the "general average," see clerk examination, p. 201.

The time allowed for this examination is six consecutive hours.

The first, second, third, and fourth subjects of this examination are substantially the same as the corresponding subjects of the clerk examination, p. 201.

FIFTH SUBJECT.—*Arithmetic.*

Question 1. Add the following, placing the total at the bottom:

742,155.74
429.39
6,873.68
397.49
1,956,374.20

Question 2. Express in figures one thousand eight hundred and eighty-nine.

Question 3. In the fiscal year ended June 30, 1888, the postal clerks employed on railroads traveled 122,031,104 miles, and those employed on steam-boats 1,767,649 miles. How many miles more were traveled by railroad than by steam-boat?

Give work in full.

Question 4. If a railway mail clerk earn $800 in a year, how much will he have left after paying his board at the rate of $16 a month.

Give work in full.

Question 5. If a railway mail clerk spend ten cents a day for street-car fare, how much will he spend in six months of 30 days each?

Give work in full.

SIXTH SUBJECT.—*Geography.*

Question 1. Name two States crossed or in part bounded by each of the following-named rivers, and give the capital of each of the States named:

River.	State.	Capital.	State.	Capital.
Connecticut				
Delaware				
Ohio				
Mississippi				
Missouri				

Question 2. Name the State in which you live and the States or foreign countries or bodies of water which form the boundaries on two sides of that State.

Question 3. Name two important cities on each of the following-named rivers and lakes, and give the name of the State in which each of these cities is situated: Hudson River, Ohio River, Mississippi River, Lake Erie, Lake Michigan.

Question 4. Name three cities on or near the Atlantic Ocean, one on or near the Gulf of Mexico, and one on or near the Pacific Ocean.

Question 5. Name the State of the Union that extends farthest east and the State that extends farthest west, and name the capital of each.

SEVENTH SUBJECT.—*Railway and other systems of transportation in the United States.*

DIVISIONS OF THE RAILWAY MAIL SERVICE.

First division.—The New England States.

Second division.—New York, New Jersey, Pennsylvania, Delaware, and the Eastern Shore of Maryland.

Third division.—Maryland (excluding the Eastern Shore), Virginia, West Virginia, North Carolina, and the District of Columbia.

Fourth division.—South Carolina, Georgia, Florida, Alabama, and Mississippi.

Fifth division.—Ohio, Indiana, Kentucky, and Tennessee.

Sixth division.—Illinois, Iowa, Nebraska, and Wyoming.

Seventh division.—Missouri, Kansas, Colorado, and New Mexico.

Eighth division.—California, Nevada, Oregon, Alaska, Arizona, Idaho, Utah, and Washington.

Ninth division.—The through mails via Buffalo, Suspension Bridge, Toledo, and Detroit; the lines of the Lake Shore and Michigan Southern Railroad and the Lower Peninsula of Michigan.

Tenth division.—Wisconsin, Northern Peninsula of Michigan, Minnesota, Dakota, and Montana.

Eleventh division.—Arkansas, Louisiana, Indian Territory, and Texas.

Question 1. Name the three principal cities of your State and the principal railway lines (three, if there be that many) centering in each of them.

Question 2. Name the principal railways (not less than two) passing through or terminating in your State, and give five of the principal connections (roads which are crossed by them or terminate in the same city with them), made by either or both of them.

Question 3. Name the roads which together form the most direct line from your nearest railway station (give name of that station) to the largest city in any adjoining State. (Give name of the city and of the adjoining State.)

Question 4. Name the road or roads connecting two of the most important cities in your State and name ten of the largest cities (or important towns, if there be not ten cities) situated on those roads.

Question 5. Name the two most important railway centers in each of the States of your railway mail division (omitting your own State) and the road or roads or steam-boat lines connecting each of those centers with the capital of your State.

EIGHTH SUBJECT.—*Reading addresses.*

The examiner will note in the proper place on the right-hand upper corner of this sheet the examination number of the competitor.

The examiner in charge will take each competitor separately, after he has filled out the other sheets of this examination, and examine him in the exercise of reading addresses. As the same package of cards will be used for each competitor, only one can be examined at a time. The competitor should be taken into a separate room, away from the other competitors, in order that they may not hear the reading.

The competitor will be furnished with the package of cards arranged in order of numbers from one to fifty. The examiner will take this sheet in his hand, note the exact time the competitor commences the reading of the first card, and then direct the competitor to commence the reading, enjoining upon him the necessity of reading as rapidly as he can with accuracy, and informing him that he will not be allowed more than ten minutes for the reading of the fifty addresses. The examiner will, with a pencil (a colored pencil if practicable), underline on this sheet each error made by the competitor in the reading, and when the reading is completed, will note hereon the time of the completion to the fraction of a minute.

It will be necessary for the examiner to be very careful in noting the errors made by the competitor. It will not be proper for the examiner to interrupt the competitor in the course of his reading by any questions, as such interruption will not only delay the competitor, but will give him an opportunity to correct his own errors. The competitor will be allowed to make only one attempt to read each card or any portion of the address thereon. The examiner will, therefore, ignore a second reading, should the competitor in any case give one, and mark the error or give credit, as the case may be, on the first reading. Every error should be carefully noted, whether in the title of the individual, any portion of his name, the number of the street, the town, city, county, or State. No charge will be made for incorrect pronunciations, if the name required can be distinguished by the pronunciation given.

The examiner will be careful to underline only the particular point in which the error has been made, to wit: In the title, in the part of the name incorrectly read, or in the part of the address giving the number, street, town, county, or State. Care must be taken to see that the cards are properly arranged in numerical order after the examination of each competitor, and prior to the commencement of the examination of another.

The cards upon which this test is made are of about the size of a postal-card, and the addresses thereon are in manuscript or photolithographs of manuscript, in different styles of handwriting. There are fifty cards in the package. The addresses are also printed upon a sheet which the examiner holds during the reading and on which the errors made by the competitor are indicated. The following are a few samples of addresses used:

ADDRESSES.

John H. Magruder, grocer, 1417 New York ave., Washington, D. C.
H. M. Summerville, cor. Brown & 10th sts., Kalamazoo, Mich.
Perry Mason & Co., 41 Temple Place, Boston, Mass.
Gen'l Eleazar Z. Mann, Vancouver B'ks, Clarke Co., Wash. T.
Lieut. C. E. Lee, U. S. N., Bayou La Chute, Caddo Parish, La.
S. F. Myers & Co., 48 & 50 Maiden lane, New York, N. Y.
Geo. F. King & Merrill, 29 Hawley st., Boston, Mass.
Mr. Jacob F. Steele, cor. Despair and Desperation sts., Salt River, Lake Co., Mo.
Hon. M. E. Terry, LL. D., Houma, Terre Bonne Parish, La.

51ST CONGRESS, 1st Session. } HOUSE OF REPRESENTATIVES. { Ex. Doc. No. 4.

REPORT

OF THE

COMMISSIONER OF INTERNAL REVENUE

FOR THE

FISCAL YEAR ENDED JUNE 30, 1889.

WASHINGTON:
GOVERNMENT PRINTING OFFICE.
1889.

TREASURY DEPARTMENT,
Document No. 1249, 2d ed.
Internal Revenue.

CONTENTS.

	Page.
Report submitted	3
Tables, Titles of	3
Estimated Collections for Current Fiscal Year	4
Aggregate Receipts for Each of Last Eight Fiscal Years	4
Receipts by Sources for Last Two Fiscal Years	4
Withdrawals for Consumption during Last Two Fiscal Years	6
Aggregate Receipts during Fiscal Year 1889:	
By Collection Districts	6
By States and Territories	8
In States and Territories Consolidated with Other Districts	8
Receipts by Sources for First Three Months of Current Fiscal Year	9
Cost of Collection	10
General Condition of the Service	10
Miscellaneous Expenses	11
Work and Expenses of Revenue Agents	12
Illicit Stills seized, Persons arrested, and Casualties to Officers and Employés.	12
Expenditures for Discovery and Punishment of Violators of Law:	
Through Revenue Agents	13
Through Collectors of Internal Revenue	13
From Appropriations not heretofore Reported	13
Increase in the Number of Revenue Agents	14
Estimated Expenses for Fiscal Year 1891	15
Scale of Salaries of Collectors	15
Official Force	15
Storekeepers, Gaugers, Storekeeper and Gaugers, and Distillery Surveyors	16
Condition of the Office	17
Work Performed in the Several Divisions of the Office:	
In the Division of Law	17
In the Division of Distilled Spirits	18
In the Division of Tobacco	18
In the Division of Stamps	18
In the Division of Assessments	19
In the Division of Accounts	19
In the Division of Revenue Agents	19
In the Division of Appointments, Records, and Files	20
Salaries	20
Number, Kind, and Value of Stamps Issued during Fiscal Year 1889	21
Redemption of Check Stamps	21
Manufacture of Stamp Paper	21
Production of Stamps	22
Official Count of Stamps in Stamp Vault	22

	Page
Collections from Tobacco	23
Increase in Collections from Tobacco over Fiscal year 1888	23
Increase in Quantities of Cigars, Cigarettes, Tobacco, and Snuff Taxed during Fiscal Year 1889	23
Receipts from Tobacco and Snuff	23
Receipts from Cigars and Cigarettes	23
Receipts from Special Taxes relating to Tobacco	24
Production of Tobacco, Snuff, Cigars, and Cigarettes	24
Special-Tax Payers relating to Tobacco	24
Cigars and Cigarettes Manufactured during Calendar Year 1888	25
Tobacco Factories	26
Materials used in the Manufacture of Tobacco and Snuff	26
Different kinds of Tobacco Manufactured	27
Abstract of Reports of District Attorneys	28
Offers in Compromise	29
Abstract of Seizures	30
Direct tax:	
School Farms	31
Releases granted	31
Abatement Claims	31
Rebate Claims	31
Refunding Claims	31
Sales of Real Property Acquired under the Internal-Revenue Laws	32
Equated Number of Special-Tax Payers, by States and Territories	33
Actual Number of Special-Tax Payers:	
By Collection Districts	35
By States and Territories	38
Equated Number of Liquor Dealers and Dealers in Malt Liquors from 1878 to 1889, by States and Territories	40
Statements Prepared from Reports in the Division of Distilled Spirits	44
Distilleries Registered and Operated	44
Grain and Molasses Distilleries in Operation at the Beginning of Each Month from July, 1888, to September, 1889	45
Grain and Molasses Distilleries in Operation September 1, 1880, to 1889	46
Capacities of Grain Distilleries Registered and Operated:	
By Collection Districts	47
By States and Territories	49
Comparative Statement of Distilleries Registered and Operated	50
Materials Used in the Production of Distilled Spirits:	
By Collection Districts	51
By States and Territories	53
Comparative Statement of Materials Used and Spirits Produced during Each of Last Ten Fiscal Years	54
Different Kinds of Fruit Brandy Produced:	
By Collection Districts	54
By States and Territories	55
Spirits Rectified during the Year Ended April 30, 1889:	
By Collection Districts	56
By States and Territories	56
Stock Fed at Registered Grain Distilleries:	
By Collection Districts	57
By States and Territories	58
Taxation of Fractional Parts of a Gallon of Distilled Spirits	58

Page.
Microscopist on the Analyses of Suspected Whisky 60
y Colored Whiskies 60
tion 60
Varieties of the Yeast Plant 60
it Plant 61
on of the Yeast Plant 61
on 62
Kinds of Alcohol 62
d Description of the Products of Distillation 62
ects of the Higher Alcohols and Artificial Bouquets on Animals .. 64
ure of Cheap Whiskies 64
nts with Cologne Alcohol of 93 Per Cent 65
nts with Proof Spirits 66
of Whisky 67
repared from Reports in the Division of Assessments 68
Assessments During Last Two Fiscal Years 68
or Fiscal Year 1889 by States and Territories 69
les Showing Operations at Distillery Warehouses 70
Months, of Spirits in Warehouse June 30, 1888 71
ls of Spirits in Warehouse June 30, 1888 76
ls of Spirits Produced during the Year 78
duction of Spirits 80
ited in Bonded Warehouses during Each of Last Twelve Years ... 80
illers and Location of Distillery Warehouses 81
ds of Tax-paid Spirits Withdrawn from Warehouses during the 122
thdrawals of Tax-paid Spirits 124
of Products, by Months 124
ls of Spirits Lost by Leakage or Evaporation in Warehouses dur- r 126
its Allowed for Loss by Leakage or Evaporation in Warehouse h of Last Ten Years 128
oss by Leakage or Evaporation of Spirits in Warehouse 128
ds of Spirits Withdrawn from Warehouse during the Year, and l Percentage of Leakage Allowed thereon 128
f Tax Collected from the Original Gauge of the Different Kinds of 129
of Distilled Spirits:
tion Districts in 1888 129
tion Districts in 1889 130
gn and Domestic Ports in 1888 131
gn and Domestic Ports in 1889 133
ted during Each of Last Seventeen Years 135
portation of Spirits during Fiscal Year 1889 135
lrawn for Scientific Purposes and Use of United States 136
ithdrawals of Spirits for Scientific Purposes and Use of United 136
ferred from Distillery to Manufacturing Warehouses 137
nsfers of Spirits from Distillery to Manufacturing Warehouses .. 137
e Industrial Arts 137
y Casualty in Warehouses during Fiscal Year 1889, by Collection 139
ds of Casualties by which Spirits were Lost in Warehouses during s 1888 and 1889 139
y Fire in Warehouses during Each of Last Seventeen Years 140

Page.
Different Kinds of Spirits in Warehouse June 30, 1889 141
Products, by Months, of Spirits in Warehouse June 30, 1889 143
Different Kinds of Spirits Deposited in, Withdrawn from, and Remaining in Warehouses for Fiscal Years 1888 and 1889 148
Summary of Operations at Distillery Warehouses during Fiscal Year 1889 149
Stock on Hand, Production, and Movement of Spirits for Each of Last Five Years 150
Spirits Remaining in Warehouse at Close of Each of Last Twenty-One Years . 150
Domestic and Foreign Spirits Held by Wholesale Liquor Dealers and Rectifiers October 1, 1878 to 1889 151
Spirits in Hands of Wholesale Liquor Dealers and Rectifiers October 1, 1888, and October 1, 1889 152
Production and Withdrawals of Tax-paid Spirits during First Quarter of Current Fiscal Year 154
Spirits in Distillery Warehouses October 1, for Each of Last Five Years 155
Spirits Withdrawn for Export during First Quarter of Current Fiscal Year ... 155
Comparative Statement of Spirits Withdrawn for Export with Previous Years. 156
Operations at Special Bonded Warehouses for Storage of Fruit Brandy 156
Distilled Spirits in the United States October 1, 1889 159
Exportation of Manufactured Tobacco and Snuff in Bond 159
Exportation of Cigars and Cigarettes in Bond 160
Drawback Allowed on Exported Merchandise 160
Oleomargarine 161
List of Statements Relating to Oleomargarine 161
Production and Withdrawals of Oleomargarine 161
Persons Engaged in the Sale of Oleomargarine 162
Microscopes Procured and Distributed among Collectors 162
Set of European Laws on Oleomargarine in this and Last Two Reports of Commissioner Complete 162
Summary of Operations at Oleomargarine Manufactories during the year 162
Operations in Oleomargarine during Last Two Fiscal Years by Collection Districts 163
Production, Withdrawals, and Losses of Oleomargarine in Manufactories from November 1, 1886, to June 30, 1889, by Months 164
Oleomargarine in the United States June 30, 1889 165
Receipts under the Oleomargarine Law during Fiscal Year 1889 165
Number of Manufacturers of, and Dealers in, Oleomargarine 166
Number of Retail Dealers in Oleomargarine April, 1888, and 1889 167
Location of Manufacturers of, and Wholesale Dealers in, Oleomargarine, April, 1888 and 1889 167
Report of the Analytical Chemist on Oleomargarine 169
Report of the Microscopist on Oleomargarine 170
Butter Color 170
Tables of Analysis 172
Need of New Laboratory 173
Examination by Collectors and Deputy Collectors, with Microscopes, of Articles resembling Butter 174
Oleo Oil Exported 174
Adulteration of Food and Drugs 175
Act to Prevent the Manufacture or Sale of Adulterated Food or Drugs in the District of Columbia 175
Opinion of Mr. Justice Blodgett (U. S. Circuit Court, Eastern District, Illinois) as to the Right to Import and Sell—Regulation of Commerce—Constitutional Provision 176

Page.
Report of the Microscopist on the Adulteration of Foods 179
Adulteration of Foods 179
Need of National Law to Regulate the Sale of Adulterated Foods 180
List of Brands of Adulterated Food Products 181
Baking Powders 181
Alum Baking Powders, "Package" Coffee, Cream of Tartar and Canned Vegetables 182
Lard, Olive Oil, Ground Spices, Cayenne Pepper, Ginger, Mace, and Mustard 183
Black Pepper and White Pepper 184
Foreign Laws, Decrees, and Regulations on the Repression of Adulterations of Food and Drink—
Of Canada 184
Of Italy 189
Of Turin 189
Of Portugal 190
Of Lisbon 191
Of Sweden 192
Of Norway 194
Of Switzerland 195
Of Canton of Basel-City 195
Of Canton of Zurich 195
Of Canton of Bern 195
Of Canton of Fribourg 202
Of Canton of Geneva 205
Of Canton of Neuchâtel 207
Of Canton of Valais 209
Of Canton of Vaud 214
Of France 216
Foreign Laws and Regulations on Oleomargarine—
Of Russia 217
Of The Netherlands 217

REPORT

OF

THE COMMISSIONER OF INTERNAL REVENUE.

TREASURY DEPARTMENT,
OFFICE OF INTERNAL REVENUE,
Washington, D. C., November 1, 1889.

SIR: I have the honor to submit the following report, covering the operations of the Bureau of Internal Revenue for the fiscal year ended June 30, 1889, together with certain additional information concerning the work performed during the first quarter of the current fiscal year.

The tables contained in the appendix to the bound volume of this report have been carefully prepared, and are printed in the following order, viz:

Table A, showing the receipts from each specific source of internal revenue, and the amounts refunded in each collection district, State and Territory of the United States, for the fiscal year ended June 30, 1889.

Table B, showing the number and value of internal-revenue stamps ordered from the office of the Commissioner, the receipts from the sale of documentary stamps for validating unstamped instruments, and the number and value of stamps for special taxes, tobacco, cigars, cigarettes, snuff, distilled spirits, fermented liquors, and oleomargarine, issued monthly to collectors, during the fiscal year ended June 30, 1889.

Table C, showing the percentages of receipts from the several general sources of revenue in each State and Territory of the United States to the aggregate receipts from the same sources, by fiscal years, from July 1, 1863, to June 30, 1889.

Table D, showing the aggregate receipts from all sources in each collection district, State, and Territory of the United States, by fiscal years, from September 1, 1862, to June 30, 1889.

Table E, showing the receipts in the United States from each specific source of revenue now taxable, by fiscal years, from September 1, 1862, to June 30, 1889.

Table F, showing the ratio of receipts in the United States from specific sources of revenue to the aggregate receipts from all sources, by fiscal years, from July 1, 1863, to June 30, 1889.

Table G, showing the returns of distilled spirits, fermented liquors, manufactured tobacco, snuff, cigars, and cigarettes, under the several acts of legislation, and by fiscal years, from September 1, 1862, to June 30, 1889; also statement of the production of distilled spirits and fermented liquors in the several States and Territories, by fiscal years, from July 1, 1877, to June 30, 1889.

Table H, showing the receipts from special taxes in the several States and Territories for the special-tax year ended April 30, 1889.

Table I. Abstract of reports of district attorneys concerning suits and prosecutions under the internal-revenue laws during the fiscal year ended June 30, 1889.

Table K. Abstract of seizures of property for violation of internal-revenue laws during the fiscal year ended June 30, 1889.

Table L. Statement of collections, expenses, and per centage of cost of collection, for each district, during the fiscal year ended June 30, 1889.

COLLECTIONS FOR THE CURRENT FISCAL YEAR.

I estimate that the sum of $135,000,000 will be collected from the various sources of internal revenue during the current fiscal year, provided, of course, that the existing laws and rates of taxation now imposed are maintained.

In the last annual report from this Bureau it was estimated that the receipts for the fiscal year ended June 30, 1889, would reach the sum of $125,000,000.

It affords me pleasure to state that this estimate was exceeded by $5,894,434.20, the actual receipts being $130,894,434.20.

RECEIPTS FOR THE PAST EIGHT FISCAL YEARS.

Fiscal year ended—	
June 30, 1889	$130,894,434.20
June 30, 1888	124,326,475.32
June 30, 1887	118,837,301.06
June 30, 1886	116,902,869.44
June 30, 1885	112,421,121.07
June 30, 1884	121,590,039.83
June 30, 1883	144,553,344.86
June 30, 1882	146,523,273.72

COLLECTIONS FOR FISCAL YEAR ENDED JUNE 30, 1889.

The following statements exhibit in detail the amount of internal revenue collected during the fiscal year ended June 30, 1889, the sources from which the revenue was derived, the total sum collected in each district and State, the cost of collection, etc.:

INTERNAL-REVENUE RECEIPTS DURING THE LAST TWO FISCAL YEARS.

COMPARATIVE STATEMENT SHOWING THE RECEIPTS FROM THE SEVERAL OBJECTS OF INTERNAL TAXATION IN THE UNITED STATES DURING THE FISCAL YEARS ENDED JUNE 30, 1888 AND 1889.

Objects of taxation.	Receipts during fiscal year ended June 30—		Increase.	Decrease.
	1888.	1889.		
SPIRITS.				
Spirits distilled from apples, peaches, and grapes	$799,296.19	$1,165,371.91	$366,075.72	.....
Spirits distilled from materials other than apples, peaches, and grapes	63,609,641.18	68,281,803.93	4,672,162.75	.....
Rectifiers (special tax)	168,316.70	166,645.77	.....	$1,670.93
Retail liquor-dealers (special tax)	4,331,040.99	4,296,780.04	.....	34,260.95
Wholesale liquor-dealers (special tax)	392,129.08	391,975.28	.....	153.80
Manufacturers of stills (special tax)	1,143.77	1,216.70	72.93	.....
Stills and worms manufactured (special tax)	2,410.00	3,160.00	750.00	.....
Stamps for distilled spirits intended for export	2,188.50	5,252.70	3,064.20	.....
Total	69,306,166.41	74,312,206.33	5,006,039.92	.....

PARATIVE STATEMENT SHOWING THE RECEIPTS FROM THE SEVERAL OBJECTS OF INTERNAL TAXATION IN THE UNITED STATES, ETC.—Continued.

Objects of taxation.	Receipts during fiscal year ended June 30—		Increase.	Decrease.
	1888.	1889.		
TOBACCO.				
rs and cheroots	$11,534,179.95	$11,602,156.92	$67,976.97	
rettes	931,363.05	1,075,830.68	144,467.63	
f	594,959.13	645,089.57	50,130.44	
acco, chewing and smoking	16,154,049.05	17,076,899.94	922,850.89	
ers in leaf tobacco (special tax)	44,945.83	48,841.72	3,895.89	
ers in manufactured tobacco (special x)	1,268,294.89	1,280,015.93	11,721.04	
nufacturers of tobacco (special tax)	5,125.00	5,128.25	3.25	
nufacturers of cigars (special tax)	116,398.09	120,195.53	3,797.44	
llers of tobacco (special tax)	13,116.53	12,701.88		$414.65
Total	30,662,431.52	31,866,860.42	1,204,428.90	
FERMENTED LIQUORS.				
beer, lager-beer, porter, and other nilar fermented liquors	22,829,202.90	23,235,863.94	406,661.04	
wers (special tax)	175,164.66	178,593.95	3,429.29	
ail dealers in malt liquors (special tax)	148,295.99	139,792.38		8,503.61
olesale dealers in malt liquors (special x)	171,554.93	169,584.99		1,969.94
Total	23,324,218.48	23,723,835.26	399,616.78	
OLEOMARGARINE.				
omargarine, domestic and imported	653,355.10	677,302.40	23,947.30	
nufacturers of oleomargarine (special x)	17,150.00	12,400.00		4,750.00
ail dealers in oleomargarine (special x)	123,258.54	130,631.51	7,372.97	
olesale dealers in oleomargarine (special tax)	70,376.24	72,914.00	2,537.76	
Total	864,139.88	894,247.91	30,108.03	
BANKS AND BANKERS, NOT NATIONAL.				
k circulation	200.50			200.50
ks, bankers, and other parties liable n amount of notes of any person, State ank, or State banking association, or of ny town, city, or municipal corporation aid out by them	4,002.05	6,213.91	2,211.86	
Total	4,202.55	6,213.91	2,011.36	
MISCELLANEOUS.				
lections not otherwise provided for	9,768.87	6,078.48		3,690.39
alties	155,547.61	84,991.89		70,555.72
Total	165,316.48	91,070.37		74,246.11
gregate receipts	124,826,475.32	130,894,434.20	6,567,958.88	

WITHDRAWALS FOR CONSUMPTION DURING THE LAST TWO FISCAL YEARS.

The quantities of distilled spirits, fermented liquors, manufactured tobacco, snuff, cigars, cigarettes, and oleomargarine on which tax was paid during the last two fiscal years are as follows:

Articles taxed.	Fiscal year ended June 30—		Increase.	Decrease.
	1888.	1889.		
Spirits distilled from apples, peaches, and grapes.....galls..	888,107	1,294,858	406,751	.....
Spirits distilled from materials other than apples, peaches, and grapes.....galls..	70,677,379	75,868,671	5,191,292	.....
Fermented liquors.....bbls..	24,680,219	25,119,853	439,634	.....
Cigars.....no..	3,844,726,650	3,867,385,640	22,658,990	.....
Cigarettes.....no..	1,862,726,100	2,151,515,360	288,789,260	.....
Snuff.....lbs..	7,436,989	8,063,620	626,631	.....
Tobacco, chewing and smoking.....lbs..	201,925,613	213,461,249	11,535,636	.....
Oleomargarine.....lbs..	32,667,755	33,865,120	1,197,365	.....

STATEMENT SHOWING THE AGGREGATE COLLECTIONS MADE AND REPORTED TO THE COMMISSIONER OF INTERNAL REVENUE BY THE COLLECTORS OF THE SEVERAL COLLECTION DISTRICTS DURING THE FISCAL YEAR ENDED JUNE 30, 1889.

Collection districts.	Names of collectors.	Aggregate collections.
District of Alabama	Edmund W. Booker	$92,762.36
District of Arkansas	Thomas H. Simms	120,719.22
First California	Asa Ellis	1,783,849.27
Fourth California	Robert Barnett	313,263.91
District of Colorado	James F. Benedict	294,116.03
District of Connecticut	Alexander Troup	785,714.88
District of Florida	Whitfield Walker	424,082.75
District of Georgia	Thomas C. Crenshaw, jr.	436,119.14
First Illinois	Rensselaer Stone	9,134,585.96
Fifth Illinois	George A. Wilson	19,322,265.26
Eighth Illinois	Thomas Cooper	2,318,206.69
Thirteenth Illinois	William B. Anderson	232,361.97
Sixth Indiana	William D. H. Hunter	2,613,470.28
Seventh Indiana	Mahlon D. Manson	3,174,706.06
Third Iowa	Byron Webster	149,082.55
Fourth Iowa	August H. Kuhlemeier	243,494.35
District of Kansas	Nelson F. Acers	183,432.22
Second Kentucky	Hunter Wood	1,498,272.35
Fifth Kentucky	Attilla Cox	8,866,887.01
Sixth Kentucky	George H. Davison	3,406,916.67
Seventh Kentucky	James F. Robinson	2,019,001.86
Eighth Kentucky	Thomas S. Bronston	1,119,742.47
District of Louisiana	Francis S. Shields	632,000.26
District of Maryland	Joseph K. Roberts	690,449.03
District of Maryland	Henry F. Dorton (acting)	317,788.04
District of Maryland	Andrew Grant Chapman	1,562,291.79
District of Maryland	Francis M. Cox (acting)	317,479.25
District of Maryland	F. S. Hill	588,920.07
Third Massachusetts	John E. Fitzgerald	2,424,536.26
First Michigan	John B. Molony	1,702,339.71
First Michigan	James H. Stone	49,710.44
Fourth Michigan	George N. Davis	210,356.44
District of Minnesota	Adolph Biermann	1,377,796.84
First Missouri	Freeman Barnum	6,449,977.94
Sixth Missouri	Charles E. Hasbrook	1,280,630.26
District of Montana	James Shields	162,642.81
District of Nebraska	Simeon H. Calhoun	2,214,792.17
District of Nebraska	John Peters	33,862.02
District of New Hampshire	Calvin Page	469,251.54
First New Jersey	Thomas M. Ferrell	127,414.01
Fifth New Jersey	Samuel Klotz	4,183,204.57
District of New Mexico	Joseph P. McGrorty	59,063.67
First New York	Robert Black	3,525,693.10

STATEMENT SHOWING THE AGGREGATE COLLECTIONS MADE AND REPORTED TO THE COMMISSIONER OF INTERNAL REVENUE, ETC.—Continued.

Collection districts.	Names of collectors.	Aggregate collections.
Second New York	John A. Sullivan	$1,590,296.47
Third New York	Leonard A. Giegerich	5,677,380.27
Fourteenth New York	Isban Hess	1,679,382.79
Twenty-first New York	William A. Beach	1,070,922.90
Twenty-eighth New York	James A. Hanlon	2,104,999.48
Fourth North Carolina	William H. Yarborough	1,134,231.49
Fifth North Carolina	Kerr Craige	1,332,918.78
First Ohio	William T. Bishop	8,602,253.37
First Ohio	David W. McClung	625,180.06
Tenth Ohio	George L. Jonnson	609,534.41
Eleventh Ohio	James W. Newman	857,573.36
Eighteenth Ohio	John H. Farley	872,186.31
District of Oregon	John Whiteaker	226,524.99
First Pennsylvania	Frederick Gerker	2,615,596.31
First Pennsylvania	John F. Kline (acting)	162,771.25
First Pennsylvania	David Martin	259,574.96
Ninth Pennsylvania	John T. MacGonigle	701,630.36
Ninth Pennsylvania	James MacGonigle (acting)	57,152.95
Ninth Pennsylvania	George Washington Hensel	999,292.98
Twelfth Pennsylvania	Charles B. Staples	538,136.53
Twenty-third Pennsylvania	Edmund A. Bigler	2,901,323.50
Twenty-third Pennsylvania	Samuel D. Warmcastle	285,317.72
District of South Carolina	D. Frank Bradley	81,722.51
Second Tennessee	Nathan Gregg	138,365.27
Second Tennessee	William A. Allen	1,614.54
Fifth Tennessee	John T. Hillaman	926,355.96
Third Texas	Isham G. Searcy	143,424.09
Fourth Texas	Robert M. Henderson	84,693.43
Second Virginia	Andrew L. Ellett	1,837,636.25
Sixth Virginia	Hambleton Shepperd	1,465,990.23
District of West Virginia	John T. McGraw	781,663.47
First Wisconsin	Edward C. Wall	2,695,300.41
Second Wisconsin	Alfred C. Parkinson	401,195.51
Total from collectors		130,894,419.70
Cash receipts from sale of adhesive stamps a		14.50
Aggregate receipts		130,894,434.20

a Documentary stamps issued to collectors for validating unstamped instruments.

RECEIPTS BY STATES AND TERRITORIES DURING THE LAST FISCAL YEAR.

STATEMENT SHOWING THE AGGREGATE COLLECTIONS OF INTERNAL REVENUE BY STATES AND TERRITORIES DURING THE FISCAL YEAR ENDED JUNE 30, 1889.

States and Territories as constituted for the collection of internal revenue.	Aggregate collections.	States and Territories as constituted for the collection of internal revenue.	Aggregate collections.
Alabama	$92, 762. 36	New Jersey	$4, 319, 618. 58
Arkansas	120, 719. 22	New Mexico (*k*)	59, 062. 67
California (*a*)	2, 097, 013. 18	New York	15, 648, 675. 01
Colorado (*b*)	294, 116. 03	North Carolina	2, 467, 150. 27
Connecticut (*c*)	785, 714. 88	Ohio	11, 566, 727. 51
Florida	424, 082. 75	Oregon (*l*)	226, 524. 99
Georgia	436, 119. 14	Pennsylvania	8, 520, 796. 56
Illinois	31, 007, 419. 79	South Carolina	81, 722. 51
Indiana	5, 788, 236. 34	Tennessee	1, 066, 335. 77
Iowa	392, 576. 90	Texas	238, 117. 53
Kansas (*d*)	183, 432. 22	Virginia	3, 303. 626. 48
Kentucky	16, 910, 814. 76	West Virginia	781, 663. 47
Louisiana (*e*)	632, 009. 26	Wisconsin	3, 090, 495. 92
Maryland (*f*)	3, 986, 928. 18		
Massachusetts	2, 424, 536. 26	Total by States and Territories	120, 894, 419. 70
Michigan	1, 962, 397. 59		
Minnesota	1, 377, 796. 84	Cash receipts from sale of adhesive stamps*	14. 50
Missouri	7, 730, 608. 20		
Montana (*g*)	162, 642. 81	Aggregate receipts	120, 894, 434. 20
Nebraska (*h*)	2, 248, 624. 19		
New Hampshire (*i*)	469, 351. 54		

* See note *a*, p. 7.

a Including the State of Nevada.
b Including the Territory of Wyoming.
c Including the State of Rhode Island.
d Including the Indian Territory.
e Including the State of Mississippi.
f Including the State of Delaware, District of Columbia, and two counties of Virginia.
g Including the Territories of Idaho and Utah.
h Including Dakota.
i Including the States of Maine and Vermont.
k Including the Territory of Arizona.
l Including Alaska and the Territory of Washington.

TOTAL COLLECTIONS YEAR ENDED JUNE 30, 1889, IN STATES OR TERRITORIES CONSOLIDATED WITH OTHER DISTRICTS.

Arizona (with New Mexico)	$31, 614. 93
Dakota (with Nebraska), estimated	90, 000. 00
District of Columbia (with Maryland)	163, 523. 09
Delaware (with Maryland)	244, 271. 06
Idaho (with Montana)	26, 569. 80
Maine (with New Hampshire)	53, 637. 84
Mississippi (with Louisiana)	49, 654. 19
Nevada (with fourth California)	25, 564. 29
Rhode Island (with Connecticut)	280, 198. 68
Utah (with Montana)	48, 034. 22
Vermont (with New Hampshire)	23, 941. 48
Washington and Alaska (with Oregon)	93, 456. 00
Wyoming (with Colorado)	12, 048. 25

RECEIPTS FOR FIRST THREE MONTHS OF PRESENT FISCAL YEAR.

The following table shows the receipts from the several objects of taxation for the first quarter of the fiscal years ending June 30, 1889 and 1890. A comparison of the receipts for the two periods is also given:

Objects of taxation.	Amount of tax paid during first three months of fiscal year—		Increase.	Decrease.
	1889.	1890.		
SPIRITS.				
Spirits distilled from apples, peaches, or grapes.	$200,042.18	$225,598.90	$25,556.72	.....
Spirits distilled from materials other than apples, peaches, or grapes.	16,039,747.80	18,157,310.89	2,117,563.09	.....
Wine made in imitation of champagne, etc	.....	.....	.....	.....
Rectifiers (special tax)	5,904.23	6,241.71	337.48	.....
Retail liquor dealers (special tax)	260,739.25	273,429.22	12,689.97	.....
Wholesale liquor dealers (special tax)	11,087.56	15,358.25	4,270.69	.....
Manufacturers of stills, and stills and worms manufactured (special tax)	1,172.52	1,990.84	818.32	.....
Stamps for distilled spirits intended for export.	309.40	568.60	259.20	.....
Total	16,519,002.94	18,680,498.41	2,161,495.47	.....
TOBACCO.				
Cigars and cheroots	3,004,981.25	3,159,897.35	154,916.10	.....
Cigarettes	284,188.49	305,295.69	21,107.20	.....
Manufacturers of cigars (special tax)	5,267.50	4,933.39	.....	$334.11
Snuff of all descriptions	157,939.03	182,518.87	24,579.84	.....
Tobacco, manufactured, of all descriptions	4,142,195.00	4,742,151.30	599,956.30	.....
Dealers in leaf tobacco (special tax)	1,767.75	2,860.50	1,092.75	.....
Dealers in leaf tobacco, not over 25,000 pounds (special tax)	325.10	778.10	453.00	.....
Retail dealers in leaf tobacco (special tax)	.....	.....	.....	.....
Dealers in manufactured tobacco (special tax).	101,684.98	105,947.86	4,262.88	.....
Manufacturers of tobacco (special tax)	213.00	235.75	22.75	.....
Peddlers of tobacco (special tax)	1,317.40	1,047.40	.....	270.00
Total	7,699,879.50	8,505,666.21	805,786.71	.....
FERMENTED LIQUORS.				
Fermented liquors, tax of $1 per barrel on	6,785,355.73	7,322,205.17	536,849.44	.....
Brewers (special tax)	5,262.49	4,472.96	.....	789.53
Retail dealers in malt liquors (special tax)	17,131.09	18,208.65	1,077.56	.....
Wholesale dealers in malt liquors (special tax).	14,684.01	15,281.03	597.02	.....
Total	6,822,433.32	7,360,167.81	537,734.49	.....
OLEOMARGARINE.				
Oleomargarine, domestic and imported	135,694.90	115,368.60	.....	20,326.30
Manufacturers of oleomargarine (special tax)	.....	500.00	500.00	.....
Retail dealers in oleomargarine (special tax)	5,828.00	4,632.00	.....	1,196.00
Wholesale dealers in oleomargarine (special tax)	7,100.00	4,230.00	.....	2,870.00
Total	148,622.90	124,730.60	.....	23,892.30
BANKS, BANKERS, ETC.				
Bank circulation	.....	.....	.....	.....
Notes of persons, State banks, towns, cities, etc., paid out	375.25	.....	.....	375.25
Total	375.25	.....	.....	375.25
MISCELLANEOUS.				
Penalties	22,448.46	12,496.95	.....	9,951.51
Collections not otherwise herein provided for	956.17	965.76	9.59	.....
Total	23,404.63	13,462.71	.....	9,941.92
Aggregate receipts	31,213,718.54	34,684,525.74	3,470,807.20	.....

COST OF COLLECTION.

The cost of collection for the past fiscal year, distributed among the different items of appropriation, was approximately as follows:

For salaries and expenses of collectors, including pay of deputy collectors, clerks, etc., and including expenses incident to enforcing the provisions of law taxing oleomargarine	$1,747,360.17
For salaries and expenses of revenue agents, surveyors of distilleries, gaugers, storekeepers, and miscellaneous expenses	2,107,637.00
For paper for internal-revenue stamps	44,563.31
For expenses of detecting and punishing violations of internal-revenue laws	29,138.03
For salaries of officers, clerks, and employés in the office of Commissioner of Internal Revenue	257,030.14
Total	4,185,728.65

The percentage of the cost of collection is a fraction less than 3.2 per cent., which is exactly the same as the percentage of cost for the fiscal year ended June 30, 1888. Owing to the great number of distilleries in operation during the last fiscal year, and the increased quantity of spirits produced, resulting in an increase of the taxes collected from that source, as compared with the receipts of the previous year, of more than $5,000,000, as shown in the accompanying statements, the expenditures for the salaries of store-keepers, and the fees of gaugers were largely in excess of the amount estimated when the appropriation was made therefor. The result was, there were not funds enough to pay these officers in full for the month of June, 1889, and they have been paid up to the 8th of June only, leaving their accounts for the remainder of the month of June unpaid until an appropriation is made to cover this deficiency. The amount of this deficiency, as shown by accounts now on file, is $107,637, and has been included in the cost of collection, as above stated, so that it appears that the increase in the cost of collection, as compared with the previous year, is in exact ratio with the increased collections.

As the provisions of section 3154, Revised Statutes, require the assignment of a store-keeper to every distillery warehouse established by law, and of sections 3287, 3295, and 3320, Revised Statutes, require the presence of a gauger at every distillery or rectifying establishment, whenever spirits are to be gauged, the employment of these officers was not only compulsory, but absolutely necessary to enable the proper officers to collect the taxes on distilled spirits and protect the interests of the Government, even after it became evident that the appropriation for their payment was insufficient.

The statement of the cost of collection does not include the cost of printing internal-revenue stamps, the appropriation for which is made directly to the Bureau of Engraving and Printing, and is not under the control of this office.

GENERAL CONDITION OF THE SERVICE.

The offices of the several collectors of internal revenue have been subjected to rigid and careful examinations as often during the past fiscal year as was possible with the limited force of revenue agents at my command. Besides these examinations, during the past fiscal year and up to the date of this report, the offices of fifty-two collection districts have been transferred to new collectors, and at each of these transfers the accounts of the collectors have been checked up, and the condition of the district carefully examined. I regard the general condition of the service throughout the country as very satisfactory.

MISCELLANEOUS EXPENSES.

The act of Congress approved August 7, 1882, making provision for sundry civil expenses for the year ending June 30, 1883, required the Commissioner of Internal Revenue to make a detailed statement of all miscellaneous expenditures in the Bureau of Internal Revenue for which appropriation was made in that act. In accordance with this requirement, I submit the following detailed statement of miscellaneous expenses incurred:

Express charges on public money forwarded by collectors and deputy collectors to depository	$4,028.42
Telegraphing on public business	570.48
Locks for distilleries	3,174.80
Hydrometers for use in gauging spirits	6,294.07
Gauging rods	101.00
Stationery for internal-revenue officers	12,988.52
Internal-revenue record for internal-revenue officers	2,399.96
Federal reporter for office of the Commissioner	10.00
Compensation of United States attorneys in internal-revenue cases allowed under sections 827 and 838, Revised Statutes	1,551.50
Traveling expenses of clerks under special orders of the Department	136.53
Expenses of seizures and sales by collectors	122.05
Total	31,377.33

REVENUE AGENTS' DIVISION.

Twenty revenue agents have been employed during the last fiscal year—one as chief of division in this office, twelve in charge of territorial divisions, three in the examination of the offices and accounts of collectors, and four in assisting agents in charge of divisions, and on special duty.

EXPENSES OF REVENUE AGENTS.

There have been expended from the appropriation for salaries and expenses of revenue agents during the year the following amounts:

Aggregate salary of agents	$44,549.00
Aggregate amount for traveling expenses	31,517.87
Stationery furnished agents	189.26
Transportation over Pacific railroads	627.72
Total	76,883.85

WORK OF REVENUE AGENTS.

One thousand two hundred and fifty-three violations of internal-revenue law have been reported by revenue agents during the year, six hundred and fifty-nine persons have been arrested on their information, property to the value of $137,404.76 has been reported by them for seizure, and $94,606.53 for assessments for unpaid taxes and penalties. Two hundred and seventeen examinations of the accounts of collectors have been made and the condition of the offices reported upon by agents, and eleven transfers of collectors' offices under new appointment have been made under their supervision.

ILLICIT STILLS SEIZED.

The following statement shows the number of illicit stills seized, persons arrested, and casualties to officers and employés during the fiscal year ended June 30, 1889:

Districts.	Stills seized.		Number of persons arrested.	Casualties.	
	Destroyed.	Removed.		Officers or employés killed.	Officers or employés wounded.
Alabama	61	3	35		
Arkansas	2	3	1		
Colorado			1		
Connecticut		1			
Florida		1	1		
Georgia	97	43	116		
Second Kentucky	9		4		
Fifth Kentucky	4		4		
Seventh Kentucky	1		1		
Eighth Kentucky	36		15	1	
Louisiana	2	7	1		
First New York	1				
Fourth North Carolina	40	2	14		1
Fifth North Carolina	78	9	10		
Twenty-third Pennsylvania			1		
South Carolina	27	1	7		1
Second Tennessee	3		1		
Fifth Tennessee	13		18		
Sixth Virginia	13	7			
West Virginia	1		5		
First Wisconsin		1	1		
Total	388	78	236	*1	†2

*Deputy Marshal Russell Wireman.
†Deputy Collector B. B. Bouldin and Deputy Marshal O. F. Hightower.

STILLS SEIZED AND CASUALTIES TO OFFICERS AND EMPLOYÉS FOR THE LAST TEN YEARS.

	1880.	1881.	1882.	1883.	1884.	1885.	1886.	1887.	1888.	1889
Stills seized	969	756	464	397	377	245	564	456	518	406
Officers and employés killed	3	1	4	1	.....	1	.....	.....	1	1
Officers and employés wounded	7	9	1	.....	1	.....	1	1	1	2

EXPENDITURES FOR THE DISCOVERY AND PUNISHMENT OF VIOLATORS OF LAW.

In accordance with the provisions of the act making the appropriation, the following detailed statement of expenditures for detecting and bringing to trial and punishment persons guilty of violating internal-revenue laws is submitted:

AMOUNT EXPENDED THROUGH REVENUE AGENTS FOR FISCAL YEAR 1889.

Name.	Amount.	Name.	Amount.
James S. Battle	$5,239.01	S. Kirkpatrick	$4,368.09
A. H. Brooks	4,550.94	John McKenna	398.49
E. M. Brown	2,172.09	A. C. McGlaghlin	1,911.10
W. H. Chapman	3,744.87	William Somerville	2,024.06
George B. Clark	795.60	L. A. Thrasher	162.94
R. L. Cromwell	65.75	J. M. Tobin	435.38
H. P. Dunlap	4.00		
C. W. Eldridge	255.95	Total	27,815.13
J. H. Hurlburt	686.86		

AMOUNT EXPENDED THROUGH COLLECTORS OF INTERNAL REVENUE DURING THE FISCAL YEAR 1889.

Name.	District.	Amount.
J. T. McGraw	West Virginia	$362.35
H. Shepperd	6th Virginia	4.29
W. H. Yarborough	4th North Carolina	39.00
	Total	405.64

RECAPITULATION.

Amount expended by revenue agents	$27,815.13
Amount expended by collectors	405.64
Amount expended for rewards	839.47
Amount expended for miscellaneous purposes	77.79
Total expended	29,138.03

AMOUNT EXPENDED FROM APPROPRIATIONS NOT HERETOFORE REPORTED.

Name.	District.	Fiscal year.	Amount.
George B. Clark, revenue agent	.....	1888	$20.00
James S. Battle, revenue agent	.....	1888	29.35
J. H. Hurlburt, revenue agent	.....	1888	18.00
H. Shepperd, collector	Sixth Virginia	1888	364.00
Rewards under Circular 99	.....	1888	65.89
Total	.....	.....	497.24

The accounts for expenditures under this appropriation are rendered monthly, with an itemized statement, and in all cases supported by proper subvouchers duly sworn to. These accounts pass through all the accounting offices in the Treasury Department, and are filed in the Register's office.

INCREASE OF THE NUMBER OF REVENUE AGENTS.

By the provisions of section 3152, Revised Statutes, the Commissioner of Internal Revenue was authorized to employ, whenever in his judgment the necessities of the service so required, competent agents, not exceeding at any time twenty-five in number, to be paid such compensation as he deemed proper. Section second of the act of March 1, 1879, empowered the Commissioner to employ agents to the number of thirty-five. The act of Congress making appropriation for the legislative, executive, and judicial expenses of the Government for the fiscal year ending June 30, 1885, reduced the number of agents from thirty-five to twenty, and limited their compensation to seven dollars per day, and instead of allowing them their actual and necessary hotel or board bills while absent from their homes on public business, provided in lieu thereof an allowance not exceeding three dollars per day.

I respectfully recommend that the Commissioner of Internal Revenue be authorized to employ agents not exceeding twenty-five in number, to be paid such compensation as he may deem proper, and which the Secretary may approve, together with their actual and necessary traveling expenses when engaged in the performance of their duties.

No officers connected with this Bureau render more valuable service or are more useful than experienced, intelligent, and efficient agents. Upon them the Commissioner is obliged to rely for information as to the efficiency and fidelity of the local officers and the general condition of the service in every collection district in the country. To see that the laws are properly enforced and that the local officers are faithful in the performance of their duties, agents are obliged to visit, not only every collection district, but every subdivision of the districts. Their duties are multitudinous and important. Experience has demonstrated that to discover and prevent frauds, to secure the faithful collection of the revenue and the equitable and proper enforcement of the law, the whole territory must be frequently and carefully canvassed by agents. Nearly all the more important violations of law are discovered and reported by them. With the present number it is often impracticable to assign more than one to a territorial division embracing several States. One agent can not efficiently perform the duties required of him in a division embracing so many collection districts.

The present number, in my opinion, is entirely insufficient for the work required. Three are absolutely necessary for the examination of collectors' accounts; three are constantly required for investigations and examinations which can not be made by local officers, for the occasional transfers of collectors' offices and for other special duties; one is necessarily assigned to duty in this office, leaving but thirteen available for the discovery and prevention of fraud and for the general work required of them all over the country.

I also recommend that the agents, when traveling on duty, be allowed, under the regulations of the Treasury Department, their actual and necessary traveling expenses, including hotel or board bills, when absent from their homes. The present method of commuting hotel bills by a per diem allowance not exceeding $3 has not, as a matter of economy

in the public expenditures or as the means of obtaining the best results from the expenditures made, in my opinion, proved to be a wise restriction. It operates unequally and unjustly upon the agents according to the duties or the localities to which they are assigned.

ESTIMATED EXPENSES FOR NEXT FISCAL YEAR.

I estimate the expenses of the Internal Revenue Service for the fiscal year ending June 30, 1891, as follows:

For salaries and expenses of collectors, including pay of deputy collectors and clerks, and expense of enforcing the act of August 2, 1886, taxing oleomargarine, and the act of August 4, 1886, imposing on the Government the expense of the inspection of tobacco exported	$1,800,000
For salaries and expenses of twenty revenue agents, for surveyors, for fees and expenses of gaugers, for salaries of store-keepers, and for miscellaneous expenses	2,100,000
For paper for internal revenue stamps	50,000
For detecting and bringing to trial and punishment persons guilty of violating the internal revenue laws, including payment for information and detection	50,000
For salaries of officers, clerks, and employés in the office of the Commissioner of Internal Revenue	261,590
For expenses incident to the enforcement of the act of October 12, 1888, for the prevention of the manufacture and sale of adulterated foods and drugs in the District of Columbia, which provides for the analysis of such articles under the direction of the Commissioner of Internal Revenue	5,000
Total	4,266,590

SCALE OF SALARIES OF COLLECTORS.

The recommendations made for the salaries of collectors are based upon an estimate of their probable collections according to the following scale, with the qualification that if the actual collections should vary from the amounts estimated the salaries will be re-adjusted at the end of the fiscal year:

For collection of—	Salary.	For collection of—	Salary.
$25,000 or less	$2,000	$375,001 to $425,000	$3,375
25,001 to $37,500	2,125	425,001 to 475,000	3,500
37,501 to 50,000	2,250	475,001 to 550,000	3,625
50,001 to 75,000	2,375	550,001 to 625,000	3,750
75,001 to 100,000	2,500	625,001 to 700,000	3,875
100,001 to 125,000	2,625	700,001 to 775,000	4,000
125,001 to 175,000	2,750	775,001 to 850,000	4,125
175,001 to 225,000	2,875	850,001 to 925,000	4,250
225,001 to 275,000	3,000	925,001 to 1,000,000	4,375
275,001 to 325,000	3,125	1,000,001 and upwards	4,500
325,001 to 375,000	3,250		

OFFICIAL FORCE.

The force connected with this Bureau during the fiscal year which ended June 30, 1889, in the various districts throughout the United States, as re-organized under the executive order of May 21, 1887, was sixty-three collectors, who received per annum salaries as follows:

Number.	Salary.	Number.	Salary.	Number.	Salary.
31	$4,500	4	$3,750	5	$3,000
1	4,375	3	3,625	2	2,875
1	4,250	1	3,500	5	2,750
1	4,125	2	3,250	2	2,625
8	4,000	2	3,125		

There were also employed nine hundred and sixty-five deputy collectors, who received per annum salaries as follows:

Number.	Salary.	Number.	Salary.	Number.	Salary.
22	$2,000	165	$1,200	2	$480
11	1,900	127	1,100	1	425
33	1,800	1	1,050	12	400
1	1,750	135	1,000	3	360
10	1,700	2	950	27	300
31	1,600	64	900	3	250
2	1,550	4	850	2	240
59	1,500	25	800	8	200
8	1,450	1	750	4	150
123	1,400	7	700	5	120
1	1,350	22	600		
35	1,300	9	500		

There were also employed in the offices of the different collectors one hundred and eighty-five clerks, who received per annum salaries as follows:

Number.	Salary.	Number.	Salary.	Number.	Salary.
1	$1,800	9	$1,150	9	$700
2	1,600	7	1,100	2	650
3	1,500	29	1,000	11	600
9	1,400	33	900	1	500
4	1,300	19	800	1	400
1	1,250	5	750		
37	1,200	2	720		

Also twenty-nine porters, messengers, or janitors who received per annum salaries, as follows:

Number.	Salary.	Number.	Salary.	Number.	Salary.
6	$600	2	$360	1	$120
3	500	5	300	3	100
2	480	2	200	1	75
1	450	1	150		
1	400	1	144		

STORE-KEEPERS, GAUGERS, ETC.

There were also employed 570 gaugers, who received fees not to exceed $5 per day; 536 store-keepers and 884 store-keeper and gaugers, whose pay did not exceed $4 per diem, and 6 distillery surveyors. All the foregoing officers are paid only when actually employed.

The pay of store-keepers and storekeeper and gaugers assigned to distilleries whose registered daily capacity is 20 bushels or less is fixed by law at $2 per diem. The pay of those assigned to larger distilleries has been graded according to the following scale:

Compensation for storekeeper and gaugers, and storekeepers assigned to distilleries having a surveyed daily capacity exceeding 20 bushels and not exceeding 40 bushels, $3 per day; compensation of those assigned to distilleries having a surveyed daily capacity exceeding 40 bushels and not exceeding 60 bushels, $3.50 per day; compensation of those assigned to distilleries having a surveyed daily capacity exceeding 60 bushels, $4 per day.

CONDITION OF THE OFFICE.

At the close of the year ended June 30, 1889, 199 officers, clerks, ssengers, and laborers were employed in this Bureau, and the aggre- te amount paid during the year for their salaries was $257,030.14. During the year ended June 30, 1888, 193 persons were employed and e aggregate payment on account of their salaries was $252,637.16. ie difference in the amounts paid for salaries arises from the fact that ring the year ended June 30, 1888, a number of vacancies existed in e official force of the office, which were not filled until after that date. The work of the office is kept fully up to date, and has been carefully id accurately performed.

I am indebted to the officers, clerks, and employés for this gratifying ate of affairs, which is due to the diligence, promptitude, and accuracy ith which they have performed their duties.

Referring to my estimate for salaries of officers, clerks, etc., for this ureau, for the fiscal year ending June 30, 1891, I would state that there re at present twelve clerks carried on the rolls of this office, and paid om its appropriation, who are detailed for duty in other offices of this epartment, viz:

clerk of class 3		$1,600.00
clerks " 2		2,800.00
clerk " 1		1,200.00
clerks " E		3,000.00
" " D		4,500.00
Making an aggregate of salaries paid of		$13,100.00

The services of these clerks can be permanently dispensed with by is office, and I would suggest that they be transferred to the offices here they are now employed. If this be done the appropriation asked r by me may be correspondingly reduced.

REPORT OF WORK PERFORMED.

The work performed by the different divisions of the office during the cal year ended June 30, 1889, is shown by the following statement:

DIVISION OF LAW.

ers in compromise briefed	321
licitor's opinions prepared	322
ers in compromise acted upon	330
ports of suits and prosecutions recorded	5,953
ports of seizures, on Form 117, recorded	337
ports of seizures and destructions, on Form 161	555
ports of sales of forfeited personal property received, examined, and ecorded	104
ports on Form 128 recorded	19
her reports received and examined	3,842
it-claim deeds of real estate sold, prepared	4
ount received for sales of real property	$6,685
counts of United States attorneys for services in internal-revenue ases received and acted upon	23
ard claims acted upon	21
ect-tax claims examined and disposed of	11
ount allowed on direct-tax claims	$2,235.64
plications for redemption of school farm lands examined and dis- osed of	7
mber of acres redeemed	700
ims for abatement of taxes disposed of	2,463
ers for abatement of taxes issued	458
ount of abatement claims allowed (uncollectible)	$34,488.15

Amount of abatement claims allowed (erroneous assessment).....
Amount of abatement claims rejected (uncollectible).....
Amount of abatement claims rejected (erroneous assessment).....
Claims for the rebate of tax considered and allowed.....
Amount of claims for the rebate of tax allowed .....
Claims for the refunding of taxes disposed of .....
Amount of refunding claims allowed .....
Amount of refunding claims rejected.....
Circulars filled out and addressed.....
Letters written .....

DIVISION OF DISTILLED SPIRITS.

Returns and reports relating to distilled spirits examined and disposed of .....
Returns and reports relating to fermented liquors examined and disposed of .....
Computations made of capacities of distilleries, and of distillers' monthly liabilities... .....
Cases of liability to assessment for deficiency, excess, and errors in gauging found and reported.....
Aggregate amount reported for assessment.....
Locks examined and issued .....
Hydrometer sets, boxes, cups, stems, and thermometers examined and issued .....
Gauging rods examined and issued .....
Wantage rods examined and issued.....
Letters written .....

DIVISION OF TOBACCO.

Accounts of cigar manufacturers audited .....
Accounts of tobacco manufacturers audited.....
Statements and notices of apparent deficiencies in accounts sent to collectors for service on manufacturers.....
Explanations of deficiencies examined and acted upon.....
Claims for abatement and refunding of taxes examined and opinions thereon furnished to the Solicitor.....
Letters written .....

DIVISION OF STAMPS.

Sheets of stamps received from Bureau of Engraving and Printing and counted .....
Collectors' orders and requisitions filled.....
Packages of stamps mailed.....
Books of stamps and coupons returned by collectors received and counted .....
Stamps and coupons returned by collectors received and counted.
Stubs of stamps examined.....
Books of stamps and coupons referred to Fifth Auditor.....
Claims for redemption of stamps received and examined.....
Claims for redemption of stamps allowed and referred to Fifth Auditor .....
Claims for redemption of stamps rejected.....
Applications for restamping received and disposed of .....
Applications for issue of special-tax stamps, in lieu of others destroyed, received and disposed of.....
Claims on Form 66 and 66A received and examined.....
Claims on Form 66 and 66A allowed and referred to Fifth Auditor
Stubs of tax-paid spirit and special-tax stamps examined on claims 66 and 66A.....
Reports examined and disposed of .....
Statements of accounts made.....
Names of persons copied from stubs of special-tax stamps as appearing liable to assessment .....
Names of persons copied from stubs of special-tax stamps as reported for assessment.....
Re-examination of stubs of special-tax stamps made to verify persons liable to assessment .....

Packages received by express recorded and distributed	197
Packages received by registered mail recorded and distributed	5,139
Acknowledgments of receipt of stamps prepared and forwarded	2,579
Letters written	3,882
Value of stamps received from the Bureau of Engraving and Printing	$150,268,142.00
Value of stamps issued to collectors	$147,107,230.51
Value of stamps on tin-foil wrappers for tobacco issued to manufacturers by stamp agent at New York	$142,867.00
Value of stamps issued for stamping documents under section 3422 Revised Statutes	$14.50
Total value of stamps issued	$147,250,112.01
Value of stamps destroyed	$2,632,350.65
Value of stamps and coupons forwarded to Fifth Auditor as vouchers in collectors' accounts	$12,862,118.16
Value of claims for redemption of stamps allowed	$23,786.66
Value of claims on forms 66 and 66A certified to Fifth Auditor for allowance	$4,241,442.99

DIVISION OF ASSESSMENTS.

Reports relating to assessments examined and disposed of	12,618
Reports relating to bonded accounts examined and disposed of	384,323
Reports relating to exportations examined and disposed of	66,256
Reports relating to oleomargarine examined and disposed of	4,034
Claims for drawback disposed of	1,274
Letters written	3,546

DIVISION OF ACCOUNTS.

Weekly reports examined and disposed of	2,774
Monthly reports examined and disposed of	31,856
Quarterly reports examined and disposed of	446
Miscellaneous reports examined and disposed of	822
Final accounts of collectors referred for settlement	11
Certificates of deposit for internal-revenue collections recorded (amounting to $130,781,223.36)	26,336
Certificates of special deposits to the credit of the Secretary of the Treasury recorded (amounting to $51,999.83)	462
Drafts mailed to collectors for gaugers' fees and expenses (amounting to $724,555.03)	6,593
Drafts mailed to depositaries for transfer of special deposits (amounting to $45,521.55)	279
Drafts mailed to collectors for compromise offers returned (amounting to $9,348.82)	39
Drafts mailed to collectors for expenses of office	755
Collectors' monthly reports of taxes, etc., consolidated into yearly statements	574
Consolidated statements of monthly reports of taxes, etc., recorded	32
Letters written	1,525

DIVISION OF REVENUE AGENTS.

Reports of revenue agents disposed of	2,505
Reports of collectors relative to illicit distilling disposed of	58
Accounts of revenue agents examined	481
Miscellaneous expense accounts examined	112
Sales by dealers in leaf tobacco abstracted and referred to collectors	110,337
Sales by dealers in oleomargarine abstracted and referred to collectors	327,521
Quarterly returns of ordnance and ordnance stores in hands of collectors, examined and recorded	80
Reports of examining officers on condition of collectors' offices, examined and recorded	228
Reports of collectors of seizures of illicit stills, Form 162, examined and recorded	685
Reports of revenue agents of seizures, etc., Form 170, examined and recorded	135
Letters written	1,449

DIVISION OF APPOINTMENTS, RECORDS, AND FILES.

Commissions of collectors recorded, appointees notified, and blank bonds prepared	32
Bonds of collectors and disbursing agents recorded	65
Commissions of gaugers, store-keepers, and store-keeper and gaugers recorded, appointees notified, and blank bonds prepared	558
Bonds of gaugers, store-keepers, etc., examined and recorded	535
Statements of organization of collectors' offices and districts, Form 204, recorded	63
Reports of examining officers on condition of collectors' offices, examined and acted upon	228
Letters received for entire Bureau registered and distributed to divisions	28,131
Letters briefed and filed	13,602
Press copies of letters briefed, registered, and arranged for reference (covering 49,968 pages of letter paper)	32,617
Pages of press-copy letters copied in record books, indexed, and compared (covering 2,824 pages in record books)	5,246
Pages of press-copy letters (not recorded) bound in volumes, paged, and indexed	27,371
Pages of letter and cap paper copied and compared	11,876
Press-copy letters compared and paged in registers	55,707
Letters briefed and registered	4,650
Blank forms prepared and issued	8,149,799
Blank books prepared and issued	12,600
Letters written	7,001

SALARIES.

I have the honor to recommend that Congress appropriate, for the fiscal year ending June 30, 1891, the sum of $261,990 as salaries for the following officers, clerks, and employés in this Bureau:

One Commissioner, at	$6,000
One Deputy Commissioner, at	3,600
One chemist, at	2,500
One microscopist, at	2,500
Two heads of division, at	2,500
Five heads of division, at	2,250
One superintendent of stamp vault, at	2,000
One stenographer, at	1,800
Twenty-four clerks, at	1,800
Twenty-four clerks, at	1,600
Thirty-four clerks, at	1,400
Twenty-four clerks, at	1,200
Thirteen clerks, at	1,000
Forty clerks, at	900
Two messengers, at	840
Fourteen assistant messengers, at	720
Thirteen laborers, at	660

An aggregate of 201 persons.

I also recommend the appropriation of the sum of $2,500 as salaries for one stamp agent at $1,600, and one counter at $900, the same to be re-imbursed by the stamp manufacturers, as provided by the act of August 5, 1882.

STAMP DIVISION.

STATEMENT SHOWING NUMBER, KIND, AND VALUE OF INTERNAL-REVENUE STAMPS ISSUED FOR THE FISCAL YEAR ENDED JUNE 30, 1889.

Class of stamps.	Number.	Value.
Tax-paid	1,701,300	$78,506,280.00
Exportation, spirits	58,000	5,800.00
Other than tax-paid	4,272,400	
Tobacco and snuff	389,682,505	21,242,285.81
Exportation, tobacco	84,400	
Cigar and cigarette	262,199,647	12,428,914.70
Exportation, cigars	6,000	
Special-tax	877,386	8,817,356.00
Fermented liquors	74,718,400	25,279,150.00
Brewers' permits	106,400	
Oleomargarine	1,075,800	827,444.60
Exportation, oleomargarine	105,600	
Tin-foil for tobacco, issued by stamp agent at New York	28,497,360	142,867.00
Documentary, issued for stamping documents under section 3422 Revised Statutes	12	14.50
Total	763,385,204	147,250,112.01

REDEMPTION OF CHECK STAMPS.

From July 1, 1888, to June 30, 1889, there were received for redemption 66 claims for check and proprietary stamps, aggregating $143.54.

As the time fixed by law for the redemption of these stamps expired June 30, 1886, the claims were rejected and returned.

At the close of the fiscal year ended June 30, 1889, there remained undisposed of 78 claims. Some of these are made up without the stamps being returned, and others consist simply of the stamps with no accompanying claim, in many instances it being impossible to determine the ownership. These claims and the accompanying stamps have been deposited in one of the vaults for safe-keeping.

MANUFACTURE OF STAMP PAPER.

Under date of June 15, 1889, by means of advertising in the newspapers, sealed proposals were invited for furnishing the Bureau with paper, of the prescribed weight and finish, to be used in printing United States internal-revenue stamps for the fiscal year ending June 30, 1890. Three bids were obtained in response, and these were opened and considered July 15, 1889. After consultation by the committee and proper test of the samples of paper furnished with each of the several bids, the contract was awarded July 23, 1889, to the Fairchild Paper Company, of Boston, Mass., at the rate of 6.3 cents per pound, the price stated covering all expenses for manufacture of paper and its transportation to the Treasury Department. Under the contract for 1888–'89, the cost of paper manufactured and delivered for same use was 6.7 cents per pound.

The contract for the present year was executed July 25, 1889, and provides for the manufacture of about 450,000 pounds. It is believed that amount will be ample for all demands of the current year. The manufacture of paper was commenced August 13, 1889.

PRODUCTION OF STAMPS.

During the past fiscal year all internal-revenue stamps were produced at the Bureau of Engraving and Printing with the exception of those imprinted on tinfoil wrappers, which were printed by John J. Crooke Co., of New York City, under a contract which provides that the imprinting of such stamps shall be without cost to the Government, the contractor receiving such remuneration from the manufacturers of tobacco as may be agreed upon by them. The contractor also re-imburses to the United States the sum of $2,500 paid for the salaries of one stamp agent and one counter.

OFFICIAL COUNT OF STAMPS IN STAMP VAULT.

Two official counts of the internal-revenue stamps contained in the stamp vault were made during the fiscal year ended June 30, 1889, by committees appointed by the honorable Secretary of the Treasury. The first count was completed January 10, 1889, and the second March 30, 1889.

Both counts were found to agree exactly with the balances indicated by the books of the stamp division. In closing their report to the honorable Secretary of the Treasury upon the last count the committee said:

> The result of this and previous examinations of the stamp vault made by this committee demonstrates that more than a billion of stamps have been handled by the stamp division without a single error.

The committee also commended very highly the system of checks and balances employed in this division.

TOBACCO DIVISION.

The aggregate amount of taxes collected from tobacco during the last fiscal year was $31,866,860.42. This amount includes internal-revenue taxes paid by stamps on imported manufactured tobacco, snuff, cigars, and cigarettes.

The increase of collections for the last fiscal year over those for the previous fiscal year, was from—

Manufactured tobacco	$922,850.89
Snuff	50,130.44
Cigars and cheroots	67,976.97
Cigarettes	144,467.63
Total increase of collections	1,185,425.93

The increase in the quantity of tobacco and snuff and in the number of cigars and cigarettes for the last fiscal year over those taxed during the previous fiscal year was:

Manufactured tobacco	pounds	11,535,636
Snuff	do	626,631
Total	do	12,162,267
Cigars	number	22,658,990
Cigarettes	do	288,789,260
Total	do	311,448,250

The export account shows an increase in manufactured tobacco of 118,183 pounds; an increase in the number of cigars exported of 266,700; and an increase in the number of cigarettes exported of 65,909,950.

The number of cigars imported during the fiscal year ended June 30, 1889, was 90,087,407. The value of the manufactured tobacco imported was $70,353.

COMPARATIVE STATEMENT.

The following exhibit shows in detail the receipts for the fiscal year ended June 30, 1889, from each particular source of the tobacco tax, as compared with those for the previous fiscal year:

RECEIPTS FROM TOBACCO AND SNUFF.

Manufactured tobacco	$17,076,899.94
Snuff	645,089.57
Total for year ended June 30, 1889	17,721,989.51
Total for year ended June 30, 1888	16,749,008.18
Increase in collections	972,981.33

The increase in collections from chewing and smoking tobacco was $922,850.89, and from snuff $50,130.44.

RECEIPTS FROM CIGARS AND CIGARETTES.

Cigars and cheroots	$11,602,156.92
Cigarettes	1,075,830.68
Total for year ended June 30, 1889	12,677,987.60
Total for year ended June 30, 1888	12,465,543.00
Increase in collections	212,444.60

Of this increase $67,976.97 was on cigars and $144,467.63 was on cigarettes.

RECEIPTS FROM SPECIAL TAXES.

Manufacturers of cigars	$120,195
Increase, manufacturers of cigars	3,797
Manufacturers of tobacco	5,123
Increase, manufacturers of tobacco	[illegible]
Dealers in manufactured tobacco	1,280,015
Increase, dealers in manufactured tobacco	11,721
Peddlers of tobacco	12,701
Decrease, peddlers of tobacco	414
Leaf dealers	48,841
Increase, leaf dealers	3,895

PRODUCTION OF TOBACCO, SNUFF, CIGARS, AND CIGARETTES.

The production of tobacco, snuff, cigars, and cigarettes for the fiscal year ended June 30, 1889, computed from the receipts from stamps so for all such goods as were put on the market for consumption, together with those removed in bond for export, and including importation was:

TOBACCO AND SNUFF.

	Pounds.
Tobacco	213,461,2[illegible]
Snuff	8,063,[illegible]
Total tobacco and snuff taxed	221,524,[illegible]
Tobacco and snuff exported	13,622,[illegible]
Total production for fiscal year 1889	235,147,[illegible]
Total production for fiscal year 1888	222,866,[illegible]
Total increase over fiscal year 1888	12,280,[illegible]

The increase of taxed tobacco and snuff over fiscal year 1888 w 12,162,267 pounds; of tobacco exported, 118,183 pounds.

CIGARS AND CIGARETTES.

	Number.
Cigars and cheroots	3,867,385,[illegible]
Cigarettes	2,151,515,[illegible]
Total taxed	6,018,901,[illegible]
Cigars exported	1,699,[illegible]
Cigarettes exported	246,679,[illegible]
Total product for fiscal year 1889	6,267,280,[illegible]
Total product for fiscal year 1888	5,889,655,[illegible]
Increase	377,624,[illegible]

The increase of taxed cigars was 22,658,990; of taxed cigarett 288,789,260; of cigars exported, 266,700; and of cigarettes export 65,909,950.

SPECIAL-TAX PAYERS.

Special tax year ended April 30, 1889.

Manufacturers of tobacco	[illegible]
Manufacturers of cigars and cigarettes	20,[illegible]
Peddlers of tobacco	1,[illegible]
Dealers in leaf tobacco	3,[illegible]
Dealers in leaf tobacco, not exceeding 25,000 pounds	1,[illegible]
Retail dealers in leaf tobacco	[illegible]
Dealers in manufactured tobacco	590,[illegible]
Total	618,[illegible]
Special-tax payers previous fiscal year, as computed	554,[illegible]
Increase during special-tax year 1889	63,730

The apparent increase in number of special-tax payers is not an actual increase, as the number obtained for previous years has been found on the computation that each paid special tax for a full year, as shown by the receipts from the sale of special-tax stamps, while for the special-tax year 1889 the actual number has been obtained by direct report from the collectors of internal revenue.

THE TABULAR STATEMENTS.

In the tables annexed will be found statements showing the manner in which the manufacturing is distributed through the different States, the number of persons and firms engaged in each of the two branches of manufacturing, the quantity of different kinds of material used, and the quantity and kind of products manufactured. These tables are compiled from the reports received from collectors of internal revenue of the transactions of manufacturers in their several districts for the calendar year ended December 31, 1888, a period of time differing from the fiscal year, which will account for any apparent discrepancies between them and the previous part of the report relating to tobacco.

STATEMENT SHOWING THE NUMBER OF CIGAR MANUFACTURERS' ACCOUNTS REPORTED, THE NUMBER OF CIGARS AND CIGARETTES REPORTED MANUFACTURED DURING THE CALENDAR YEAR 1888, AND THE QUANTITY OF TOBACCO USED THEREIN.

State.	Districts.	No. of accounts.	Pounds of tobacco used.	Cigars manufactured.	Cigarettes manufactured.
Alabama	1	45	87,762	4,351,445	4,650
Arkansas	1	27	55,663	2,466,445	.....
California	2	408	2,747,177	133,733,415	3,419,560
Colorado	1	152	229,238	11,622,910	.....
Connecticut	1	404	962,053	40,655,807	.....
Florida	1	220	2,356,915	117,516,650	1,053,220
Georgia	1	28	42,795	1,913,275	.....
Illinois	4	1,585	3,111,414	191,567,873	156,090
Indiana	2	573	1,102,382	47,089,150	.....
Iowa	2	340	1,004,212	47,435,611	.....
Kansas	1	262	397,453	18,265,095	.....
Kentucky	5	259	586,417	30,753,075	.....
Louisiana	1	142	843,747	33,193,616	46,941,855
Maryland	1	874	2,295,359	90,075,512	143,647,140
Massachusetts	1	632	2,048,284	93,820,143	210,200
Michigan	2	708	1,965,304	94,879,072	.....
Minnesota	1	200	622,374	32,590,765	.....
Missouri	2	744	1,272,810	59,453,189	78,000
Montana	1	31	46,427	2,217,150	.....
Nebraska	1	161	389,439	18,685,675	.....
New Hampshire	1	137	238,040	10,651,532	.....
New Jersey	2	889	1,411,530	63,279,977	336,100
New Mexico	1	7	5,246	216,575	.....
New York	6	5,581	26,842,855	1,108,404,661	906,998,780
North Carolina	2	31	2,140,994	2,622,495	564,542,050
Ohio	4	1,588	5,942,188	294,871,159	13,641,900
Oregon	1	64	79,100	3,574,855	.....
Pennsylvania	4	4,875	18,796,201	944,711,608	19,100
South Carolina	1	18	16,917	797,910	.....
Tennessee	2	47	101,780	4,838,756	.....
Texas	2	60	102,462	4,730,578	.....
Virginia	2	199	2,484,022	44,966,938	530,842,000
West Virginia	1	114	836,095	46,928,300	.....
Wisconsin	2	650	1,702,274	65,787,270	.....
Total	63	22,055	82,866,929	3,668,162,486	2,211,900,645

STATEMENT OF THE NUMBER OF TOBACCO FACTORIES IN EACH STATE, THE AGGREGATE QUANTITY OF LEAF-TOBACCO AND OTHER MATERIAL USED, AND THE AGGREGATE QUANTITIES OF THE DIFFERENT KINDS OF MANUFACTURED TOBACCO PRODUCED DURING THE CALENDAR YEAR ENDED DECEMBER 31, 1888, TOGETHER WITH A STATEMENT OF THE QUANTITY OF MANUFACTURED TOBACCO ON HAND AT THE COMMENCEMENT AND AT THE CLOSE OF THE YEAR, THE QUANTITY TO BE ACCOUNTED FOR, THE QUANTITY REMOVED IN BOND FOR EXPORT, THE TOTAL SALES REPORTED, AND THE AMOUNT OF TAXES PAID.

States.	Factories.	Materials used in manufacturing tobacco.							
		Leaf.	Scraps.	Stems.	Licorice.	Sugar.	Other materials.	In process.	Total.
	No.	*Pounds.*	*Pounds.*	*Pounds.*	*Pounds.*	*Pounds.*	*Pounds.*	*Pounds.*	*Pounds.*
Alabama	1	8,030			199				8,229
Arkansas	5	98,459	650		4,696	10,440	283	278	114,804
California	5	99,034	2,522		1,393		300	2,900	106,149
Georgia	10	112,828			4,541	2,061	636	5,141	123,227
Illinois	23	3,161,416	623,149	9,647	127,950	488,149	240,970	243,711	4,894,992
Indiana	15	43,924	6,694		136	559	102	180	51,595
Iowa	1	235,900	14,003	61,882	2,385	13,966		15,102	343,188
Kansas	1	16,890	3,342		40		259	12,062	32,693
Kentucky	78	14,196,552	50,498		2,646,742	2,118,831	1,103,814	307,792	20,427,229
Louisiana	41	2,172,190	10,510		35,153	32,687	11,955	22,952	2,286,347
Massachusetts	5	129,279	6,779	15,524	9,062	5,501	4,029	68,424	238,598
Maryland	12	10,270,487	1,072,796	677,657	227,426	424,191	411,601	1,075,820	14,160,978
Michigan	7	6,429,928	618,537	547,675	621,859	937,608	399,114	386,921	9,941,642
Minnesota	8	11,975	6,547	25,735	1,794	2,140	1,389		49,550
Missouri	58	31,952,850	1,090,127	2,451,243	8,585,803	4,875,599	1,188,815	468,796	50,613,233
New Jersey	11	18,718,515	968,297	591,634	3,535,612	3,018,600	1,562,636	1,948,418	30,343,712
New York	107	13,306,917	2,252,354	95,047	883,919	812,019	864,282	732,126	18,946,664
North Carolina	222	18,698,615	425,444	47,407	890,794	460,193	292,029	1,735,076	22,549,558
Ohio	36	11,105,026	235,164	410,439	2,589,511	2,261,124	451,276	344,006	17,396,546
Pennsylvania	32	4,080,388	97,521	31,526	44,736	73,619	72,396	231,962	4,632,088
South Carolina	4	21,947	229	41	1,327		15	2,839	26,398
Tennessee	52	1,774,923	20,604	7,501	90,742	59,849	4,420	66,590	2,024,629
Texas	3	13,142			382	570		3,293	17,387
Virginia	158	43,627,591	735,200	14,439	3,026,290	2,776,581	1,939,031	1,128,406	53,247,538
West Virginia	11	989,130	1,436,823	664	48,551	8,835			2,479,003
Wisconsin	8	3,999,765	59,910	726,836	62,590	301,466	168,916	150,423	5,459,848
Total	914	185,268,700	9,737,700	5,714,847	23,438,633	18,695,550	8,718,308	8,951,116	260,524,854

STATEMENT OF THE NUMBER OF TOBACCO FACTORIES IN EACH STATE, ETC.—Continued.

States.	Tobacco manufactured.										
	Tobacco and snuff produced.					Tobacco on hand January 1, 1888.	Total tobacco.	Unsold January 1, 1889.	Exported.	Sold.	Value of stamps used.
	Plug.	Fine-cut chewing.	Smoking.	Snuff.	Total.						
	Pounds.	*Pounds.*	*Pounds.*	*Pounds.*	*Pounds.*	*Pounds.*	*Pounds.*	*Pounds.*	*Pounds.*	*Pounds.*	
Alabama	.....	.....	888	5,182	6,070	.....	6,070	.....	.....	6,070	$485.60
Arkansas	63,814	.....	18,998	.....	87,712	17,562	105,274	34,784	7	70,481	5,638.48
California	.....	.....	89,262	.....	89,262	17,222	106,494	9,204	18,125	79,165	6,333.20
Georgia	86,411	.....	14,059	353	100,823	119,104	219,927	80,780	306	138,839	11,107.12
Illinois	197,693	1,068,739	3,041,332	69,394	4,407,143	50,810	4,457,953	54,520	1,259	4,402,274	352,181.92
Indiana	1,551	.....	8,102	31,778	41,431	34,587	76,018	27,212	180	48,626	3,890.08
Iowa	.....	39,960	284,630	.....	324,590	6,228	330,818	10,918	.....	319,900	25,592.00
Kansas	10,508	.....	7,330	.....	17,838	11,532	29,360	11,058	.....	18,302	1,464.16
Kentucky	14,518,160	421,251	1,197,035	358,965	16,395,411	986,916	17,382,327	1,029,943	20,031	16,332,353	1,306,588.24
Louisiana	.....	.....	1,779,822	31,694	1,811,516	342,643	2,154,159	342,908	87,511	1,723,740	137,899.20
Massachusetts	130,561	.....	209	48,760	179,541	430	179,971	608	5,523	173,840	13,907.20
Maryland	2,442,671	566,134	8,483,871	648,239	12,140,615	385,716	12,526,331	394,970	23,019	12,108,342	968,667.36
Michigan	592,617	3,259,380	5,544,795	2,145	9,398,937	24,521	9,423,758	11,844	3,043	9,408,871	752,709.68
Minnesota	.....	7,570	42,191	.....	50,761	19,050	69,811	27,165	3,001	39,645	3,171.60
Missouri	36,609,198	210,698	4,478,664	1,287,359	41,985,914	1,735,528	43,721,442	2,150,640	1,233,294	40,337,508	3,227,000.64
New Jersey	11,835,044	4,251,168	6,139,320	1,400,846	23,626,378	59,062	23,685,439	65,660	230,490	23,389,310	1,871,144.80
New York	2,462,263	3,166,525	10,363,909	75,681	16,068,369	84,936	16,153,305	202,622	2,154,006	13,797,275	1,103,782.00
North Carolina	12,384,569	.....	4,407,110	46,570	16,832,249	7,162,326	23,994,935	6,014,378	130,748	17,849,809	1,427,984.72
Ohio	11,631,736	503,111	2,455,396	14,206	14,604,451	637,223	15,241,689	364,599	4,668	14,872,421	1,149,793.68
Pennsylvania	304	55,020	2,628,090	976,365	3,659,779	93,469	3,753,248	98,197	1,952	3,653,099	292,247.92
South Carolina	17,488	.....	1,538	.....	19,026	42,609	61,635	42,732	585	18,308	1,464.64
Tennessee	1,144,907	510	117,820	214,285	1,477,522	947,307	2,425,329	818,679	3,226	1,603,324	128,265.92
Texas	7,287	.....	5,062	.....	12,350	2,143	14,493	2,382	463	11,648	931.84
Virginia	37,011,355	.....	1,339,792	337,725	38,688,872	9,019,428	47,708,300	7,705,370	10,088,192	29,964,738	2,397,179.04
West Virginia	5,725	.....	2,267,270	.....	2,272,995	74,924	2,347,919	71,138	529	2,276,252	182,100.16
Wisconsin	2,855	940,334	4,106,961	3,311	5,053,461	45,189	5,098,650	71,936	3,038	5,023,714	401,897.12
Total	130,561,712	14,530,395	58,834,051	5,446,858	209,353,016	21,921,660	231,274,676	20,143,611	13,963,211	197,167,854	15,773,428.32

DIVISION OF LAW.

REPORTS OF DISTRICT ATTORNEYS.

The following is an abstract of reports of district attorneys for the fiscal year 1888–'89 of internal revenue suits and prosecutions pending, commenced, and disposed of:

Suits and prosecutions.	Number of criminal actions.	Number of civil actions *in personam*.	Number of actions *in rem*.	Total.
Pending July 1, 1888	2,906	245	38	3,189
Commenced during fiscal year 1889	5,819	110	24	5,953
Total	8,725	355	62	9,142
Decided in favor of United States:				
Judgments and costs paid	413	22	7	442
Judgments and costs not paid	2,924	100	3	3,027
Total	3,337	129	10	3,476
Settled by compromise	62	7	11	80
Decided against the United States	1,011	7	6	1,024
Dismissed, abandoned, consolidated, etc	1,445	30	9	1,484
Total suits disposed of	5,855	173	36	6,064
Pending July 1, 1889	2,870	182	26	3,078
Wherein sentences are suspended	685	.....	.....	685

Recoveries of judgments, costs taxed, etc.	Fines, etc.	Principal.	Costs.	Total.
Amount of judgments recovered and costs taxed in criminal actions	$246,683.03	.....	$160,871.25	$407,554.28
Amount of judgments recovered and costs taxed in civil actions *in personam*	.....	$142,836.28	2,002.87	144,839.15
Amount of judgments recovered and costs taxed in actions *in rem*	.....	3,306.73	2,105.26	5,411.99
Amount paid to collectors in criminal actions	32,177.36	.....	22,910.02	55,087.38
Amount paid to collectors in civil suits *in personam*	.....	5,032.84	1,261.52	6,294.36
Amount paid to collectors in actions *in rem*	.....	12,005.29	2,235.73	14,241.02

OFFERS IN COMPROMISE.

The following statement shows the number of offers in compromise and action thereon under section 3229, R. S., for the fiscal year ended June 30, 1889, with amount of tax, assessable penalty, and specific penalty accepted:

Months.	Compromise cases.		Amount of tax accepted.	Amount of assessable penalty accepted.	Amount of specific penalty accepted.
	Received.	Offers accepted and sent to Secretary for approval.			
1888.					
On hand July 1	8				
July	38	12	$1,275.34	$85.99	$4,757 13
August	34	56	15.48	7.29	1,057.10
September	32	10			274.50
October	37	50	115.00		1,798.00
November	15	22	21.75		816.00
December	23	20	257.50	46.25	1,041.00
1889					
January	29	26			3,480.00
February	31	29	2,265.00		3,602.67
March	31	34	302.30		1,001.00
April	28	30	4.50		1,116.06
May	27	21	3,024.00		5,095.65
June	33	12			160.00
Offers rejected or withdrawn		14			
On hand July 1		30			
Total	366	366	7,280.87	139.53	24,200.01

RECAPITULATION.

Tax	$7,280.87
Assessable penalty	139.53
Specific penalty	24,200.01
Total	31,620.41

STATEMENT OF CASES COMPROMISED IN THE QUARTER ENDED SEPTEMBER 30, 1889.

Months.	Compromise cases.		Amount of tax accepted.	Amount of assessable penalty accepted.	Amount of specific penalty accepted.
	Received.	Offers accepted and sent to Secretary for approval.			
1889.					
On hand July 1	30				
July	44	48	$171.90		$772.00
August	45	45	530.00		1,160.50
September	24	24	245.83	$22.93	291.00
Offers rejected or withdrawn		10			
On hand October 1		16			
Total	143	143	947.73	22.93	2,223.50

RECAPITULATION.

Tax	$947.73
Assessable penalty	22.93
Specific penalty	2,223.50
Total	3,194.16

ABSTRACT OF SEIZURES.

Seizures of property for violation of internal-revenue laws during the year ended June 30, 1889, were as follows:

Articles.	Quantities.	Values.
Distilled spirits ..... gals..	45,164	$25,155.00
Tobacco ..... lbs..	3,635	284.00
Cigars ..... No..	45,983	923.00
Miscellaneous property	.....	136,747.00
Total	.....	163,109.00

ABSTRACT OF PROPERTY SEIZED FOR VIOLATIONS OF INTERNAL REVENUE LAWS DURING THE MONTHS OF JULY, AUGUST, AND SEPTEMBER, 1889.

States and Territories.	Distilled spirits.		Cigars.		Tobacco.		Miscellaneous property.
	Gallons.	*Value.*	*Number.*	*Value.*	*Pounds.*	*Value.*	*Value.*
Arkansas	48	$48.00	.....	.....	.....	.....	$213.00
Alabama	30	35.00	.....	.....	.....	.....	10.00
California	100	130.00	9,700	$116	.....	.....	19,742.40
Georgia	288	196.00	.....	.....	.....	.....	2,132.00
Illinois	.....	.....	.....	.....	.....	.....	218.47
Indiana	20	10.00	.....	.....	.....	.....	.....
Iowa	.....	.....	.....	.....	.....	.....	100.00
Kentucky	802	832.77	.....	.....	.....	.....	1,312.00
Massachusetts	102	35.00	.....	.....	.....	.....	.....
Michigan	230	230.00	.....	.....	.....	.....	5.00
Nebraska	270	332.00	.....	.....	.....	.....	.....
New York	419	150.00	600	6	.....	.....	.....
North Carolina	11,294	1,646.00	22,550	128	4,858	$418	4,558.00
New Jersey	2	2.00	.....	.....	.....	.....	30.00
Pennsylvania	294	325.00	.....	.....	.....	.....	.....
South Carolina	224	226.00	.....	.....	.....	.....	70.00
Tennessee	1,291	1,337.00	.....	.....	600	101	685.00
Virginia	5,185	5,191.00	.....	.....	.....	.....	2,210.00
	20,599	10,724.77	32,850	250	5,458	519	31,305.96

DIRECT TAX.

SCHOOL FARMS.

The act of March 2, 1889, extended the time for the redemption of "school farms" in Beaufort County, S. C., owned by the United States, by virtue of proceedings under the direct tax laws, for one year from the passage of the act.

RELEASES GRANTED.

There have been released, up to the present time, to the original owners of these lands, or their heirs at law, devisees, or grantees, under the provisions of the act of March 3, 1887, as amended by the act of March 2, 1889, 2,439.61 acres included in twenty-one different releases.

The amount paid to redeem these lands, including the refund of surplus proceeds already paid, was $796.17.

After the expiration of the time allowed for redemption it will be the duty of the Commissioner to sell, at public auction, the lands not redeemed.

ABATEMENT CLAIMS.

On the 1st of July, 1888, there were pending 95 claims for abatement of assessed taxes, amounting to $8,560.98, and during the year 2,996 claims, amounting to $408,960.88, were presented. Of these, 2,137 claims, amounting to $285,580.58, have been allowed by this office, and 766 claims, amounting to $97,620.01, have been rejected or returned for amendment. This left 188 claims for abatement still pending on the 30th of June, 1889, amounting to $34,321.27.

Since that date and up to the 1st of October, 653 other claims have been filed, amounting to $128,715.48; 481 claims have been allowed amounting to $53,345.34, and 155 claims rejected or returned for amendment, amounting to $41,541.02, and on the 1st day of October, 1889, 205 claims for abatement were pending, amounting to $68,150.39.

REBATE CLAIMS.

Three claims for the rebate of the tax on tobacco and cigars which had been previously disallowed, amounting to $122.35, were reconsidered and allowed during the fiscal year ending June 30, 1889. No claims of this character were received during the year, and none are now pending.

REFUNDING CLAIMS.

On the 1st of July, 1888, there were pending 224 claims for the refunding of taxes collected, amounting to $220,629.05, and during the year 167 other claims, amounting to $32,570.57 were presented, and one rejected claim amounting to $3,150 was reconsidered. Of these, 107 claims, amounting to $13,264.89, have been allowed, and 84 claims, amounting to $9,498.28, have been rejected or returned for amendment.

This left 201 claims for refunding still pending on the 30th of June, 1889, amounting to $233,586.45.

Since that date, and up to the 1st of October, 1889, 53 other claims have been received, amounting to $10,318.34. Of these, 19 claims have

been allowed, amounting to $1,246.86, and 31 have been rejected or returned for amendment, amounting to $7,363.59, and on the 1st of October, 1889, 204 claims for refunding were pending, amounting to $235,294.34.

SALES OF REAL PROPERTY ACQUIRED UNDER THE INTERNAL-REVENUE LAWS.

STATEMENT OF SALES OF REAL PROPERTY ACQUIRED UNDER THE INTERNAL-REVENUE LAWS, OF WHICH THE PURCHASERS RECEIVED QUIT-CLAIM DEEDS, DURING THE FISCAL YEAR 1888–'89.

Date of sale.	When acquired.	From whom acquired.	Realty sold, and where situated.	Amount sold for.
June 12, 1888	Jan. 12, 1871	George J. Stephens...	Five tracts, about 500 acres land in Green County, Va.	$500.00
Aug. 15, 1888	Apr. 10, 1880	Joseph Black.....	Lot No. 563, West Forty-seventh street, New York City.	5,800.00
Feb. 8, 1889	July 10, 1884	John Quarles.....	Lot 225, in the Twenty-fifth district of Georgia, second section of Gilmer County, and 5 acres of lot No. 226.	25.00
May 15, 1889	Apr. 7, 1883	R. M. Leftwich	125 acres, near Lithonia, in DeKalb County, Ga.	360.00
			Total.....	6,685.00

EQUATED NUMBER OF SPECIAL-TAX PAYERS.

STATEMENT SHOWING THE NUMBER OF PERSONS WHO PAID SPECIAL TAXES IN THE SEVERAL STATES AND TERRITORIES DURING THE SPECIAL-TAX YEAR ENDED APRIL 30, 1889.

(On pages 370 and 371 of this report will be found a statement of the amount of special taxes paid in each State and Territory during the special-tax year ended April 30, 1889. The figures in the following table are obtained by dividing the amounts paid by the several different kinds of special-tax payers in each State and Territory by their annual rate of tax. The periods of time during which each of the tax-payers was engaged in business are thus reduced to one year.)

States and Territories.	Rectifiers.	Retail liquor dealers.	Wholesale liquor dealers.	Manufacturers of stills.	Manufacturers of cigars.	Dealers in leaf tobacco.	Dealers in leaf tobacco not exceeding 25,000 pounds.	Retail dealers in leaf tobacco.	Dealers in manufactured tobacco.	Manufacturers of tobacco.	Peddlers of tobacco.	Brewers.	Retail dealers in malt liquors.	Wholesale dealers in malt liquors.	Manufacturers of oleomargarine.	Retail dealers in oleomargarine.	Wholesale dealers in oleomargarine.	Total.
Alabama	2	842	28	.....	38	.....	1	.....	8,955	1	.....	3	37	18	.....	21	1	9,947
Arkansas	.....	799	25	.....	22	.....	.....	1	7,373	4	1	.....	12	16	.....	16	2	8,271
California *a*	110	12,767	377	2	426	25	.....	.....	18,239	7	28	196	262	135	.....	1	.....	32,575
Colorado *b*	7	2,532	57	.....	102	4	.....	.....	5,847	.....	1	26	91	52	1	3	1	8,724
Connecticut *c*	26	4,188	80	1	398	61	13	.....	10,699	1	20	25	152	129	7	314	12	16,126
Florida	.....	340	14	.....	244	26	2	1	3,225	1	2	.....	12	6	.....	9	1	3,883
Georgia	7	1,552	40	1	21	.....	.....	.....	11,599	3	6	2	58	35	.....	3	.....	13,327
Illinois	107	11,669	233	4	1,274	57	8	.....	34,139	23	75	108	609	209	7	666	14	49,202
Indiana	11	6,016	55	.....	448	53	17	.....	17,884	13	21	44	198	112	1	48	3	24,924
Iowa	7	2,758	35	.....	285	3	.....	.....	14,785	2	7	41	223	50	.....	5	.....	18,201
Kansas *d*	1	1,254	3	.....	195	1	.....	.....	14,059	1	11	4	96	25	2	30	.....	15,682
Kentucky	58	3,210	186	1	211	870	286	.....	10,187	65	10	37	98	34	.....	64	2	15,319
Louisiana *e*	26	5,521	144	.....	127	23	.....	.....	14,137	42	50	10	158	32	.....	34	1	20,305
Maryland *f*	66	6,100	133	1	704	75	25	.....	15,008	12	18	56	123	50	.....	9	.....	22,380
Massachusetts	49	5,246	170	1	540	46	2	.....	16,819	2	92	24	236	183	1	345	23	23,779
Michigan	7	5,867	46	.....	625	15	.....	.....	18,273	9	68	128	189	128	.....	280	20	25,655
Minnesota	17	2,643	50	.....	212	5	.....	.....	9,414	6	12	99	106	99	.....	.....	.....	12,654
Missouri	53	5,558	162	1	645	58	9	.....	19,709	51	21	49	151	109	.....	146	9	26,731
Montana *g*	5	2,094	46	.....	20	.....	1	.....	3,935	1	1	46	57	46	.....	9	3	6,264
Nebraska *h*	5	3,436	55	.....	213	2	.....	.....	12,515	.....	5	42	98	118	.....	11	3	16,503
New Hampshire *i*	1	2,049	10	.....	115	1	.....	.....	12,372	.....	49	6	277	51	.....	41	.....	14,972

a Including the State of Nevada.
b Including the Territory of Wyoming.
c Including the State of Rhode Island.
d Including the Indian Territory.
e Including the State of Mississippi.
f Including the State of Delaware, District of Columbia, and two counties of Virginia.
g Including the Territories of Idaho and Utah.
h Including the Territory of Dakota.
i Including the States of Maine and Vermont.

EQUATED NUMBER OF SPECIAL-TAX PAYERS—Continued.

STATEMENT SHOWING THE NUMBER OF PERSONS WHO PAID SPECIAL TAXES IN THE SEVERAL STATES AND TERRITORIES, ETC.—Continued.

States and Territories.	Rectifiers.	Retail liquor dealers	Wholesale liquor dealers.	Manufacturers of stills.	Manufacturers of cigars.	Dealers in leaf tobacco.	Dealers in leaf tobacco not exceeding 25,000 pounds.	Retail dealers in leaf tobacco.	Dealers in manufactured tobacco.	Manufacturers of tobacco.	Peddlers of tobacco.	Brewers.	Retail dealers in malt liquors.	Wholesale dealers in malt liquors.	Manufacturers of oleomargarine.	Retail dealers in oleomargarine.	Wholesale dealers in oleomargarine.	Total.
New Jersey	26	6,521	63	1	794	10	.....	.....	16,393	8	71	40	325	192	.....	35	2	24,481
New Mexico *a*	2	1,379	25	.....	6	.....	.....	.....	2,216	2	2	14	23	41	.....	6	1	3,716
New York	242	31,637	756	1	4,674	482	5	.....	63,481	92	319	285	1,650	523	.....	8	1	104,156
North Carolina	10	1,241	29	1	27	218	25	.....	8,373	153	66	.....	32	13	.....	1	.....	10,180
Ohio	101	11,993	292	2	1,395	260	100	.....	32,683	30	144	140	227	249	2	234	10	47,872
Oregon *b*	4	1,930	42	.....	39	10	.....	.....	5,328	.....	4	77	62	24	.....	3	2	7,925
Pennsylvania	192	9,540	322	1	3,810	294	61	.....	48,031	33	235	268	428	233	3	89	4	63,544
South Carolina	1	819	11	.....	12	.....	1	.....	6,593	4	1	2	7	6	.....	1	.....	7,458
Tennessee	17	1,636	47	.....	39	202	89	.....	8,726	43	9	3	23	22	.....	27	2	10,885
Texas	17	2,794	54	.....	59	3	.....	.....	14,528	1	3	8	524	163	.....	32	6	18,192
Virginia	15	2,174	35	.....	145	334	31	.....	7,284	140	:	2	37	22	.....	3	1	10,231
West Virginia	6	581	4	.....	68	15	18	.....	4,475	6	.....	3	38	4	.....	3	.....	5,221
Wisconsin	45	6,120	92	1	599	89	11	.....	13,759	8	46	176	235	75	.....	50	5	21,311
Total	1,243	164,806	3,712	19	18,532	3,242	705	2	511,043	764	1,406	1,964	6,863	3,195	24	2,547	129	720,196
Total for the special-tax year 1883	1,250	168,587	3,815	26	17,951	3,601	985	1	496,812	855	1,458	1,968	8,161	3,870	80	2,316	131	713,217

a Including the Territory of Arizona.

b Including Alaska and the Territory of Washington.

STATEMENT SHOWING BY COLLECTION DISTRICTS THE ACTUAL NUMBER OF THE DIFFERENT KINDS OF SPECIAL-TAX PAYERS FOR THE SPECIAL-TAX YEAR ENDED APRIL 30, 1889.

(The figures in the following table represent the actual number of persons as returned to this office by the collectors of the several collection districts who, during the special-tax year ended April 30, 1889, were engaged in business for different periods of time varying from one month to twelve months each.)

Collection districts.	Rectifiers.	Retail liquor dealers.	Wholesale liquor dealers.	Manufacturers of stills.	Manufacturers of cigars.	Dealers in leaf tobacco.	Dealers in leaf tobacco not exceeding 25,000 pounds.	Retail dealers in leaf tobacco.	Dealers in manufactured tobacco.	Manufacturers of tobacco.	Peddlers of tobacco.	Brewers.	Retail dealers in malt liquors.	Wholesale dealers in malt liquors.	Manufacturers of oleomargarine.	Retail dealers in oleomargarine.	Wholesale dealers in oleomargarine.	Total.
Alabama	2	969	31	.....	44	.....	1	.....	10,492	1	.....	3	37	27	.....	39	2	11,648
Arkansas	.....	1,192	40	.....	28	.....	.....	.....	9,166	5	1	.....	14	26	.....	25	5	10,502
California:																		
First district	120	9,585	340	3	400	29	.....	.....	14,182	5	29	85	194	108	.....	2	.....	25,082
Fourth district *a*	12	4,250	43	.....	53	.....	.....	.....	5,728	.....	.....	109	79	43	.....	.....	.....	10,317
Colorado *b*	6	3,271	74	.....	132	5	.....	.....	7,507	.....	.....	28	111	65	1	3	1	11,204
Connecticut *c*	21	4,708	84	1	428	71	17	.....	11,898	1	23	24	164	147	7	413	14	18,021
Florida	.....	410	14	.....	270	27	2	1	3,570	1	2	.....	13	8	.....	35	1	4,354
Georgia	8	1,945	51	.....	28	.....	.....	.....	13,535	10	10	.....	53	42	.....	7	.....	15,689
Illinois:																		
First district	100	9,517	186	4	1,006	32	4	.....	21,170	22	71	82	315	122	7	974	18	33,630
Fifth district	9	820	24	.....	69	1	.....	.....	3,018	2	.....	12	51	37	.....	55	3	4,101
Eighth district	3	1,711	28	1	268	2	.....	.....	9,749	4	8	19	72	58	.....	49	.....	11,967
Thirteenth district	4	1,133	10	.....	115	49	.....	.....	5,425	3	4	13	246	24	.....	14	1	7,041
Indiana:																		
Sixth district	11	4,137	39	.....	369	9	27	.....	13,572	3	17	27	160	87	1	70	4	18,533
Seventh district	4	2,806	26	.....	165	65	13	.....	7,824	18	8	22	61	27	.....	15	.....	11,054
Iowa:																		
Third district	4	1,467	12	.....	31	.....	.....	.....	7,320	1	4	17	118	33	.....	.....	.....	9,057
Fourth district	3	2,108	30	.....	233	4	.....	.....	11,411	1	2	33	152	35	.....	3	.....	14,020
Kansas *d*	2	1,614	4	.....	230	1	.....	.....	17,232	1	14	3	151	19	2	46	.....	19,319
Kentucky:																		
Second district	4	750	16	.....	7	654	251	.....	3,113	30	1	2	26	10	.....	4	.....	4,868
Fifth district	46	1,374	108	2	112	130	65	.....	2,421	18	4	26	37	6	.....	34	4	4,288
Sixth district	6	602	52	.....	87	123	61	.....	1,738	14	8	6	9	3	.....	61	1	2,771
Seventh district	1	545	15	.....	35	116	61	.....	2,298	4	.....	1	20	10	.....	9	.....	3,115
Eighth district	.....	432	3	.....	2	8	15	.....	1,757	6	.....	.....	3	5	.....	1	.....	2,232

a Including the State of Nevada. *b* Including the Territory of Wyoming. *c* Including the State of Rhode Island. *d* Including the Indian Territory.

ACTUAL NUMBER OF SPECIAL-TAX PAYERS—Continued.

STATEMENT SHOWING BY COLLECTION DISTRICTS THE ACTUAL NUMBER OF THE DIFFERENT KINDS OF SPECIAL-TAX PAYERS, ETC.—Cont'd.

Collection districts.	Rectifiers.	Retail liquor dealers.	Wholesale liquor dealers.	Manufacturers of stills.	Manufacturers of cigars.	Dealers in leaf tobacco.	Dealers in leaf tobacco not exceeding 25,000 pounds.	Retail dealers in leaf tobacco.	Dealers in manufactured tobacco.	Manufacturers of tobacco.	Peddlers of tobacco.	Brewers.	Retail dealers in malt liquors.	Wholesale dealers in malt liquors.	Manufacturers of oleomargarine.	Retail dealers in oleomargarine.	Wholesale dealers in oleomargarine.	Total.
Louisiana *c*	32	6,212	145	.....	137	27	.....	.....	15,577	41	49	8	222	37	.....	52	3	22,542
Maryland *b*	69	6,516	134	1	752	76	26	.....	16,339	14	30	58	131	51	.....	16	.....	24,213
Massachusetts	63	5,838	200	4	603	39	3	.....	18,997	5	96	32	267	198	1	460	29	26,535
Michigan:																		
First district	6	4,718	41	.....	500	14	.....	.....	13,688	10	54	93	147	91	.....	301	21	19,684
Fourth district	1	1,528	9	.....	164	1	.....	.....	6,665	.....	29	22	53	33	.....	98	8	8,511
Minnesota	21	3,082	64	.....	253	5	.....	.....	11,000	9	18	116	114	110	.....	.....	.....	14,742
Missouri:																		
First district	48	3,878	110	2	503	47	9	.....	11,177	35	16	39	86	60	.....	104	3	16,117
Sixth district	15	2,930	87	.....	198	33	.....	.....	13,280	23	12	23	91	97	.....	168	19	16,996
Montana *c*	5	2,666	69	.....	28	.....	1	.....	4,570	.....	2	58	70	53	.....	15	6	7,543
Nebraska *d*	6	3,668	61	.....	220	2	.....	.....	14,855	.....	8	59	103	135	.....	20	5	19,142
New Hampshire *e*	1	2,290	11	.....	125	2	.....	.....	12,050	.....	51	6	325	55	.....	49	.....	14,965
New Jersey:																		
First district	2	1,314	8	.....	204	1	.....	.....	5,162	.....	21	5	93	83	.....	16	1	6,910
Fifth district	28	5,941	64	2	618	11	.....	.....	12,781	10	68	53	252	125	.....	58	5	20,016
New Mexico *f*	4	1,707	34	.....	7	.....	.....	.....	2,769	1	1	22	28	48	.....	10	1	4,632
New York—																		
First district	24	5,491	46	.....	822	21	.....	.....	11,162	8	43	45	262	73	.....	3	1	18,901
Second district	139	3,047	423	1	406	284	.....	.....	5,295	40	10	12	94	26	.....	.....	.....	9,779
Third district	41	6,409	144	1	2,025	162	.....	.....	12,087	31	54	49	204	28	.....	2	.....	21,337
Fourteenth district	20	8,378	92	.....	695	19	1	.....	16,915	9	104	66	535	231	.....	.....	.....	27,065
Twenty-first district	20	4,558	40	.....	569	44	4	.....	12,057	10	42	49	400	96	.....	.....	.....	17,889
Twenty-eighth district	37	6,348	81	.....	542	10	.....	.....	12,577	8	111	64	224	104	.....	.....	.....	20,101
North Carolina—																		
Fourth district	1	1,174	5	1	16	216	8	.....	7,254	69	31	.....	21	11	.....	1	.....	8,808
Fifth district	10	455	17	.....	8	63	17	.....	2,868	124	65	.....	13	3	.....	1	.....	3,644
Ohio—																		
First district	69	4,139	179	3	562	204	53	.....	8,935	21	58	45	87	39	.....	143	5	14,597
Tenth district	18	2,960	87	.....	187	11	3	.....	8,525	4	27	34	87	88	.....	18	2	12,001
Eleventh district	4	2,946	36	.....	208	20	14	.....	7,981	3	19	23	37	56	1	49	1	10,906
Eighteenth district	12	4,176	69	.....	547	73	53	.....	12,456	9	73	49	88	90	1	171	4	17,673

Oregon *g*	8	2,310	58	.....	60	11	.....	.....	6,362	.....	5	84	72	22	.....	10	6	9,018
Pennsylvania—																		
First district	137	6,453	204	1	1,566	112	3	.....	21,064	22	133	158	157	83	3	26	2	30,124
Ninth district	10	1,072	25	.....	2,089	187	65	.....	7,799	8	51	28	101	29	.....	.....	.....	11,414
Twelfth district	16	2,968	80	.....	302	4	6	.....	12,329	2	64	43	280	100	.....	4	.....	16,148
Twenty-third district	33	2,400	64	1	567	11	.....	.....	16,482	4	42	79	72	46	.....	111	4	19,916
South Carolina	2	981	18	.....	13	.....	2	.....	7,328	3	2	2	8	9	.....	1	.....	8,369
Tennessee—																		
Second district	5	380	6	.....	18	11	6	.....	3,382	13	2	2	6	7	.....	5	.....	3,843
Fifth district	12	1,262	39	.....	25	283	127	.....	6,312	31	7	2	10	15	.....	15	.....	8,140
Texas—																		
Third district	12	1,780	38	.....	45	2	.....	.....	8,631	.....	2	7	459	119	.....	26	5	11,146
Fourth district	2	1,583	14	.....	21	.....	.....	.....	9,233	1	.....	1	177	72	.....	40	4	11,148
Virginia—																		
Second district	13	1,706	33	.....	112	174	46	.....	4,845	59	2	.....	31	16	.....	7	2	7,046
Sixth district	4	1,033	6	.....	63	208	6	.....	3,825	104	7	2	13	7	.....	.....	.....	5,278
West Virginia	8	853	7	.....	114	14	51	.....	5,436	12	.....	7	58	8	.....	9	.....	6,577
Wisconsin—																		
First district	41	4,140	83	1	452	13	3	.....	8,402	6	36	103	177	55	.....	47	3	13,562
Second district	3	2,794	19	.....	208	90	12	.....	7,413	3	9	84	88	42	.....	41	8	10,811
Total	1,368	188,675	4,080	29	20,684	3,831	1,041	1	599,013	902	1,660	2,144	7,899	3,603	24	3,961	199	830,134

a Including the State of Mississippi.
b Including the State of Delaware, District of Columbia, and two counties of Virginia.
c Including the Territories of Idaho and Utah.
d Including the Territory of Dakota.
e Including the States of Maine and Vermont.
f Including the Territory of Arizona.
g Including Alaska and the Territory of Washington.

ACTUAL NUMBER OF SPECIAL-TAX PAYERS—Continued.

STATEMENT SHOWING BY STATES AND TERRITORIES THE ACTUAL NUMBER OF THE DIFFERENT KINDS OF SPECIAL-TAX PAYERS FOR THE SPECIAL-TAX YEAR ENDED APRIL 30, 1889.

States and Territories.	Rectifiers.	Retail liquor dealers.	Wholesale liquor dealers.	Manufacturers of stills.	Manufacturers of cigars.	Dealers in leaf tobacco.	Dealers in leaf tobacco not exceeding 25,000 pounds.	Retail dealers in leaf tobacco.	Dealers in manufactured tobacco.	Manufacturers of tobacco.	Peddlers of tobacco.	Brewers.	Retail dealers in malt liquors.	Wholesale dealers in malt liquors.	Manufacturers of oleomargarine.	Retail dealers in oleomargarine.	Wholesale dealers in oleomargarine.	Total.
Alabama	2	969	31	.....	44	.....	1	.....	10,492	1	.....	3	37	27	.....	39	2	11,648
Arkansas	.....	1,192	40	.....	26	.....	.....	.....	9,166	5	1	.....	14	26	.....	25	5	10,502
California *a*	132	18,585	383	3	453	29	.....	.....	19,910	5	29	194	273	151	.....	5	.....	35,402
Colorado *b*	6	3,271	74	.....	133	5	.....	.....	7,507	.....	.....	28	111	65	1	3	1	11,204
Connecticut *c*	21	4,708	84	1	428	71	17	.....	11,898	1	23	24	164	147	7	413	14	18,021
Florida	.....	410	14	.....	270	27	2	1	3,570	1	2	.....	13	8	.....	35	1	4,354
Georgia	8	1,945	51	.....	28	.....	.....	.....	13,535	10	10	.....	53	42	.....	7	.....	15,689
Illinois	116	13,181	248	5	1,453	84	4	.....	39,362	31	83	126	684	241	7	1,092	22	56,739
Indiana	15	6,943	65	.....	534	74	40	.....	21,396	21	25	49	221	114	1	85	4	29,587
Iowa	7	3,575	42	.....	314	4	.....	.....	18,731	2	6	50	270	68	.....	8	.....	23,077
Kansas *d*	2	1,614	4	.....	230	1	.....	.....	17,232	1	14	3	151	19	2	46	.....	19,319
Kentucky	57	3,703	194	2	244	1,031	453	.....	11,327	72	13	35	95	34	.....	109	5	17,374
Louisiana *e*	32	6,212	145	.....	187	27	.....	.....	15,577	41	49	8	222	37	.....	52	3	22,542
Maryland *f*	69	6,516	134	1	752	76	26	.....	16,339	14	30	58	131	51	.....	16	.....	24,213
Massachusetts	63	5,838	200	4	603	39	3	.....	18,997	5	96	32	267	198	1	460	29	26,835
Michigan	7	6,245	50	.....	634	15	.....	.....	20,353	10	83	115	200	124	.....	399	29	28,295
Minnesota	21	3,032	64	.....	253	5	.....	.....	11,000	9	18	116	114	110	.....	.....	.....	14,742
Missouri	63	6,808	197	2	701	80	9	.....	24,457	58	28	62	177	157	.....	292	22	33,113
Montana *g*	5	2,606	69	.....	28	.....	1	.....	4,570	.....	2	58	70	58	.....	15	6	7,543
Nebraska *h*	6	3,668	61	.....	220	2	.....	.....	14,855	.....	8	59	103	135	.....	20	5	19,142
New Hampshire *i*	1	2,290	11	.....	125	2	.....	.....	12,050	.....	51	6	325	55	.....	49	.....	14,965
New Jersey	30	7,255	72	2	822	12	.....	.....	17,943	10	89	58	345	308	.....	74	6	26,926
New Mexico *k*	4	1,707	34	.....	7	.....	.....	.....	2,760	1	1	22	28	48	.....	10	1	4,632
New York	281	34,226	826	2	5,061	540	5	.....	70,093	106	364	285	1,819	558	.....	2	1	114,169
North Carolina	11	1,629	22	1	24	279	25	.....	10,122	193	96	.....	34	14	.....	2	.....	12,452
Ohio	103	18,521	321	3	1,524	308	128	.....	37,899	37	177	151	269	273	2	381	12	55,109
Oregon *l*	8	2,310	58	.....	60	11	.....	.....	6,263	.....	5	64	72	32	.....	10	6	9,018
Pennsylvania	196	12,893	323	2	4,474	314	74	.....	57,674	36	290	308	610	268	3	141	6	77,602

South Carolina	2	981	18	.....	13	.....	2	.....	7,328	3	2	2	8	9	.....	1	.....	8,369
Tennessee	17	1,642	45	.....	43	294	133	.....	9,604	44	9	4	16	22	.....	20	.....	11,983
Texas	14	3,363	52	.....	66	2	.....	.....	17,884	1	2	8	636	191	.....	66	9	22,294
Virginia	17	2,739	39	.....	175	383	52	.....	8,670	163	9	2	44	23	.....	7	2	12,324
West Virginia	8	853	7	.....	114	14	51	.....	5,436	12	.....	7	58	8	.....	9	.....	6,577
Wisconsin	44	6,934	102	1	660	108	15	.....	15,815	9	45	187	265	97	.....	88	8	24,373
Total	1,368	188,675	4,080	29	20,684	3,831	1,041	1	590,013	902	1,660	2,144	7,899	3,603	24	3,961	199	836,134

a Including the State of Nevada.
b Including the Territory of Wyoming.
c Including the State of Rhode Island.
d Including the Indian Territory.
e Including the State of Mississippi.
f Including the State of Delaware, District of Columbia, and two counties of Virginia.
g Including the Territories of Idaho and Utah.
h Including the Territory of Dakota.
i Including the States of Maine and Vermont.
k Including the Territory of Arizona.
l Including Alaska and the Territory of Washington.

*EQUATED NUMBER OF LIQUOR DEALERS AND DEALERS IN MALT LIQUORS FROM 1878 TO 1889.

TABLE SHOWING THE NUMBER OF PERSONS WHO PAID THE SPECIAL TAX OF A LIQUOR DEALER AND OF A DEALER IN MALT LIQUORS, RESPECTIVELY, IN THE SEVERAL STATES AND TERRITORIES DURING THE SPECIAL-TAX YEARS ENDED APRIL 30, FROM 1878 TO 1889.

States and Territories.	Retail liquor dealers.												Wholesale liquor dealers.											
	1878.	1879.	1880.	1881.	1882.	1883.	1884.	1885.	1886.	1887.	1888.	1889.	1878.	1879.	1880.	1881.	1882.	1883.	1884.	1885.	1886.	1887.	1888.	1889.
Alabama	1,712	1,782	1,886	2,076	1,501	1,342	1,635	1,363	1,089	1,065	856	842	49	44	50	51	49	45	40	41	31	32	30	28
Arizona *a*	402	430	414	787	830	1,030	472	.....	.....	.....	.....	.....	21	21	20	33	20	32	5	.....	.....	.....	.....	.....
Arkansas	1,418	1,483	1,136	1,437	855	1,304	798	707	659	550	703	799	32	32	22	32	22	40	25	26	31	21	30	25
California *b*	8,625	8,787	8,664	8,658	9,373	9,369	9,657	10,545	10,988	11,023	11,711	12,767	261	262	258	270	293	250	260	255	365	368	328	377
Colorado *c*	880	1,286	1,777	2,534	2,623	2,955	2,429	2,288	2,282	2,174	2,831	2,532	42	62	67	71	116	96	66	79	48	51	73	57
Connecticut *d*	2,606	2,372	2,473	2,653	2,604	3,163	2,324	2,934	2,874	3,086	4,097	4,188	54	47	49	44	45	57	31	51	50	42	72	80
Dakota *e*	603	607	592	535	946	1,014	918	.....	.....	.....	.....	.....	23	24	21	15	32	26	19	.....	.....	.....	.....	.....
Delaware *f*	619	624	653	639	562	618	625	652	651	671	.....	.....	10	7	9	17	8	9	9	8	8	11	.....	.....
Dist. of Columbia *g*	.....	.....	.....	.....	.....	.....	.....	.....	.....	.....	.....	.....	.....	.....	.....	.....	.....	.....	.....	.....	.....	.....	.....	.....
Florida	503	519	566	487	409	407	291	349	357	305	332	340	8	6	4	7	8	7	8	6	11	10	11	14
Georgia	2,271	2,617	2,200	2,517	2,151	2,327	2,155	1,387	2,348	1,625	1,846	1,552	70	68	54	64	52	54	47	55	59	49	48	40
Idaho *h*	211	161	305	415	508	755	301	.....	.....	.....	.....	.....	8	9	12	14	14	24	9	.....	.....	.....	.....	.....
Illinois	10,853	9,806	10,442	11,524	11,094	12,521	10,872	9,504	10,973	11,635	11,271	11,669	270	217	201	251	250	239	238	217	239	270	222	233
Indiana	4,728	4,419	5,352	5,199	5,196	5,836	5,654	5,915	6,082	5,624	5,567	6,016	101	74	84	76	71	86	66	78	77	61	62	55
Iowa	3,984	3,465	3,965	4,313	4,104	5,001	3,989	3,549	3,769	3,584	2,928	2,758	66	48	58	50	55	86	63	52	57	54	36	35
Kansas *i*	1,038	1,650	1,821	1,132	1,460	1,898	1,948	2,086	2,318	2,098	1,277	1,254	30	40	25	23	16	27	18	21	19	17	8	3
Kentucky	3,841	3,801	3,881	3,760	4,208	4,617	4,334	4,208	3,691	3,598	3,443	3,210	243	212	188	188	186	201	225	247	227	201	218	186
Louisiana *k*	3,464	3,559	3,972	4,687	4,785	5,380	4,908	5,423	5,424	4,789	4,913	5,521	184	165	155	100	181	185	134	165	150	118	114	144
Maine *l*	412	694	757	820	918	1,054	974	1,014	951	919	.....	.....	9	6	9	10	8	10	6	7	6	8	.....	.....
Maryland *m*	4,805	4,695	4,981	4,836	4,848	5,282	5,156	5,506	5,853	6,108	6,298	6,100	179	176	165	155	150	178	169	168	159	160	134	133
Massachusetts	6,301	6,333	6,403	7,279	6,913	7,928	7,304	7,525	7,678	7,263	6,751	5,246	218	215	196	196	179	215	213	205	228	198	197	170
Michigan	4,623	4,171	4,751	4,537	5,066	5,050	5,653	6,098	6,080	6,520	5,917	5,867	57	50	46	43	49	68	54	53	54	61	53	46
Minnesota	2,077	2,099	2,355	2,510	2,898	3,597	3,406	4,474	4,006	4,156	3,095	2,643	49	37	36	36	30	54	34	52	41	62	54	50
Mississippi *n*	1,737	1,392	1,335	1,729	1,831	931	1,118	929	1,057	826	.....	.....	55	41	27	36	33	23	18	23	19	14	.....	.....
Missouri	5,990	5,952	6,372	6,430	6,950	7,298	6,133	6,787	6,348	6,746	5,548	5,558	228	214	202	191	236	215	177	193	180	175	181	162
Montana *o*	419	531	545	765	808	1,363	1,674	2,253	1,715	1,815	2,164	2,094	42	42	39	36	46	68	71	89	56	48	67	46
Nebraska *p*	976	960	1,044	929	990	1,011	1,515	2,320	2,950	3,323	2,698	3,436	33	19	19	15	23	24	44	44	56	51	58	55
Nevada *q*	978	947	974	955	812	864	577	401	764	935	.....	.....	21	32	19	17	14	13	6	12	14	17	.....	.....
New Hampshire *r*	788	828	747	922	950	1,066	1,090	1,169	1,141	1,203	2,214	2,049	7	6	13	8	4	7	4	7	6	6	12	10
New Jersey	5,773	5,698	6,260	6,395	6,229	7,782	7,014	6,838	7,553	7,759	7,229	8,521	44	37	56	60	66	70	61	55	64	77	52	63

South Carolina	1,227	1,272	1,260	1,055	814	984	876	931	938	1,001	834	819	32	36	20	28	22	28	16	16	25	20	16	11
Tennessee	3,078	2,981	2,946	2,956	1,933	1,955	1,899	1,902	1,932	1,536	1,571	1,636	104	116	93	89	65	81	54	49	60	47	56	47
Texas	3,456	3,382	2,741	2,901	2,514	2,628	3,717	3,159	3,223	3,064	2,775	2,794	119	107	97	77	59	88	64	71	56	44	47	54
Utah *o*	344	307	387	387	396	470	234	.....	.....	.....	.....	.....	16	10	18	9	16	18	4	.....	.....	.....	.....	.....
Vermont *w*	368	440	508	409	426	454	439	426	516	448	.....	.....	.....	1	3	1	1	.....	3	2	1	2	.....	.....
Virginia	2,379	2,401	2,533	2,507	2,228	2,840	2,807	2,783	2,649	2,538	2,299	2,174	*60	51	60	45	46	48	44	44	44	44	40	35
Washington *x*	244	233	231	325	391	536	238	.....	.....	.....	.....	.....	11	7	6	12	15	17	4	.....	.....	.....	.....	.....
West Virginia	696	663	724	757	786	809	755	943	816	756	700	581	11	14	11	11	9	9	11	15	11	11	8	4
Wisconsin	4,832	4,746	5,158	4,986	5,275	5,689	6,196	5,982	6,126	6,308	5,466	6,120	79	69	74	69	66	80	85	75	84	100	108	92
Wyoming *y*	266	233	218	248	235	269	127	.....	.....	.....	.....	.....	7	5	8	8	11	11	5	.....	.....	.....	.....	.....
Total	157,345	155,850	163,523	170,640	168,770	187,871	180,068	182,818	190,121	188,107	168,587	164,806	4,592	4,252	4,122	4,112	4,241	4,647	4,291	4,199	4,290	4,241	3,815	3,712

* See note at head of table, p. 33.

a Part of the collection district of New Mexico since September 5, 1883.

b Including Nevada from October 1, 1883, to July 31, 1884, and since July 1, 1887.

c Including Wyoming since August 15, 1883.

d Including Rhode Island since July 1, 1887.

e Part of the collection district of Nebraska since August 20, 1883.

f Including nine counties of Maryland from October 2, 1876, to June 30, 1887, and two counties of Virginia from June 19, 1877, to June 30, 1887; part of the collection district of Maryland since July 1, 1887.

g Part of the collection district of Maryland since October 2, 1876.

h Part of the collection district of Montana since August 20, 1883.

i Including the Indian Territory since August 8, 1881.

k Including Mississippi since July 1, 1887.

l Part of the collection district of New Hampshire since July 1, 1887.

m Exclusive of nine counties annexed to Delaware, but including the District of Columbia, from October 2, 1876, to June 30, 1887; States of Maryland and Delaware and District of Columbia since July 1, 1887.

n Part of the collection district of Louisiana since July 1, 1887.

o Including Idaho since August 20, 1883, and Utah from August 20, 1883, to July 31, 1884, and since July 1, 1887.

p Including Dakota since August 20, 1883.

q Part of California from October 1, 1883, to July 31, 1884, and since July 1, 1887; including Utah from August 1, 1884, to June 30, 1887.

r Including Maine and Vermont since July 1, 1887.

s Including Arizona since September 5, 1883.

t Including Alaska since December 27, 1872, and Washington Territory since September 1, 1883.

u Part of the collection district of Connecticut since July 1, 1887.

v Part of the collection district of Montana from August 20, 1883, to July 31, 1884, and since July 1, 1887; part of the collection district of Nevada from August 1, 1884, to June 30, 1887.

w Part of the collection district of New Hampshire since July 1, 1887.

x Part of the collection district of Oregon since September 1, 1883.

y Part of the collection district of Colorado since August 15, 1883.

*EQUATED NUMBER OF LIQUOR DEALERS AND DEALERS IN MALT LIQUORS—Continued.

TABLE SHOWING THE NUMBER OF PERSONS WHO PAID THE SPECIAL TAX OF A LIQUOR DEALER AND OF A DEALER IN MALT LIQUORS, ETC.—Continued.

States and Territories.	Retail dealers in malt liquors.												Wholesale dealers in malt liquors.											
	1878.	1879.	1880.	1881.	1882.	1883.	1884.	1885.	1886.	1887.	1888.	1889.	1878.	1879.	1880.	1881.	1882.	1883.	1884.	1885.	1886.	1887.	1888.	1889.
Alabama	8	6	14	19	12	12	19	19	11	24	32	37	4	7	4	6	10	8	12	9	9	17	19	18
Arizona *a*	1	3	5	6	9	9	8	.....	.....	.....	.....	.....	.....	.....	.....	24	10	19	11	.....	.....	.....	.....	.....
Arkansas	5	4	4	11	8	5	14	8	8	9	23	12	11	7	8	10	6	21	15	12	18	15	11	16
California *b*	160	205	190	243	265	263	239	227	247	257	281	262	31	23	29	30	28	62	45	43	120	139	128	135
Colorado *c*	24	46	60	62	57	92	70	62	76	64	85	91	13	19	53	59	41	48	42	31	65	44	64	52
Connecticut *d*	193	198	259	237	226	194	160	160	131	140	185	152	50	48	58	61	73	76	66	81	93	106	129	129
Dakota *e*	5	13	15	6	18	15	16	.....	.....	.....	.....	.....	1	6	4	6	12	13	15	.....	.....	.....	.....	.....
Delaware *f*	6	12	5	4	7	10	4	14	15	13	.....	.....	4	3	3	9	5	4	3	6	3	6	.....	.....
Dist. of Columbia *g*	.....	.....	.....	.....	.....	.....	.....	.....	.....	.....	.....	.....	.....	.....	.....	.....	.....	.....	.....	.....	.....	.....	.....	.....
Florida	10	11	16	35	45	64	18	3	1	2	1	12	3	2	3	5	16	14	12	17	10	9	10	6
Georgia	29	38	32	36	25	41	42	34	32	16	46	58	15	23	12	16	17	17	32	23	24	20	20	35
Idaho *h*	4	.....	3	2	2	6	3	.....	.....	.....	.....	.....	1	.....	1	2	2	2	2	.....	.....	.....	.....	.....
Illinois	270	275	316	300	296	299	462	915	583	594	634	699	64	84	92	107	137	127	184	148	161	204	252	209
Indiana	109	129	137	130	129	124	137	169	171	172	184	196	24	22	44	38	60	68	64	90	109	102	92	112
Iowa	366	342	427	383	321	283	216	229	152	283	249	223	48	47	51	51	54	67	54	60	64	66	48	50
Kansas *i*	44	66	86	56	52	51	77	65	83	84	119	96	14	28	31	16	18	23	28	30	27	42	26	25
Kentucky	122	142	144	148	187	190	181	124	87	104	113	98	11	15	18	17	32	70	28	29	29	40	35	34
Louisiana *k*	42	20	17	19	14	29	21	23	45	20	157	158	8	7	11	9	14	37	19	22	21	28	25	32
Maine *l*	75	87	75	78	101	108	103	80	73	92	.....	.....	4	5	12	8	13	18	12	8	7	9	.....	.....
Maryland *m*	82	90	92	120	123	126	147	172	187	164	124	123	28	28	39	42	39	37	34	45	48	55	41	50
Massachusetts	474	494	580	564	520	548	467	418	393	472	549	236	78	100	120	163	154	169	173	169	182	186	197	183
Michigan	472	483	497	387	308	163	184	184	184	206	215	189	61	55	93	88	90	108	113	119	96	151	157	128
Minnesota	126	109	116	100	96	69	81	107	130	130	169	106	18	17	21	30	25	41	44	68	57	87	122	90
Mississippi *n*	39	52	44	78	87	107	148	153	207	167	.....	.....	7	9	6	13	15	11	10	9	8	13	.....	.....
Missouri	92	110	110	153	166	181	150	189	169	206	193	151	33	51	62	61	186	108	91	129	106	155	151	109
Montana *o*	10	10	9	11	16	31	41	62	67	86	68	57	.....	.....	.....	7	11	11	15	13	37	30	26	42	46
Nebraska *p*	25	27	29	33	36	36	41	78	85	100	135	98	13	10	16	12	25	23	39	67	92	105	125	118
Nevada *q*	11	16	8	15	16	15	13	7	18	19	.....	.....	2	2	5	3	2	4	1	5	4	18	.....	.....
New Hampshire *r*	140	200	240	240	281	222	197	158	157	176	213	277	25	26	30	31	37	45	34	39	44	44	60	51
New Jersey	486	521	577	511	416	469	418	350	384	367	368	325	41	39	92	144	99	138	138	111	134	161	164	192
New Mexico *s*	4	5	8	7	8	3	14	22	23	26	20	22	.....	2	10	6	16	16	25	37	41	37	40	41

Rhode Island *u*	155	164	140	117	79	82	66	61	62	50	.....	.....	30	16	18	20	18	21	15	18	21	12	.....	.....
South Carolina	10	9	5	22	23	18	21	13	17	17	12	7	6	6	5	4	14	12	8	8	11	11	12	6
Tennessee	26	43	28	35	33	34	36	23	32	33	24	23	21	17	24	24	18	18	11	16	27	25	26	22
Texas	248	204	241	285	298	382	486	542	596	615	569	534	45	51	73	65	74	87	132	143	142	139	165	163
Utah *v*	17	15	13	12	6	10	7	.....	.....	.....	.....	.....	3	2	1	19	8	4	8	.....	.....	.....	.....	.....
Vermont *w*	76	97	87	64	50	62	47	59	49	50	.....	.....	6	8	7	14	7	13	10	7	7	7	.....	.....
Virginia	5	11	17	18	15	17	18	31	23	41	29	37	10	10	18	10	10	13	12	14	23	25	22	22
Washington *x*	48	38	38	61	56	66	37	.....	.....	.....	.....	.....	.....	1	.....	7	5	11	9	.....	.....	.....	.....	.....
West Virginia	33	32	32	46	23	26	24	20	38	48	48	38	8	2	3	7	2	10	10	6	5	14	8	4
Wisconsin	132	161	153	152	140	177	205	198	236	191	345	235	18	28	47	46	39	75	94	60	86	71	124	75
Wyoming *y*	3	1	1	6	2	2	4	.....	.....	.....	.....	.....	.....	.....	.....	5	2	4	4	.....	.....	.....	.....	.....
Total	8,459	9,488	9,877	8,586	8,006	7,998	8,220	8,676	8,409	8,685	8,161	6,863	1,040	1,148	1,733	2,034	2,186	2,582	2,705	2,705	3,012	3,309	3,370	3,195

* See note at head of table, p. 33.

a Part of the collection district of New Mexico since September 5, 1883.

b Including Nevada from October 1, 1883, to July 31 1884, and since July 1, 1887.

c Including Wyoming since August 15, 1883.

d Including Rhode Island since July 1, 1887.

e Part of the collection district of Nebraska since August 20, 1883.

f Including nine counties of Maryland from October 2, 1876, to June 30, 1887, and two counties of Virginia from June 19, 1877, to June 30, 1887; part of the collection district of Maryland since July 1, 1887.

g Part of the collection district of Maryland since October 2, 1876.

h Part of the collection district of Montana since August 20, 1883.

i Including the Indian Territory since August 8, 1881.

k Including Mississippi since July 1, 1887.

l Part of the collection district of New Hampshire since July 1, 1887.

m Exclusive of nine counties annexed to Delaware, but including the District of Columbia from October 2, 1876, to June 30, 1887; States of Maryland and Delaware and District of Columbia since July 1, 1887.

n Part of the collection district of Louisiana since July 1, 1887.

o Including Idaho since August 20, 1883, and Utah from August 20, 1883, to July 31, 1884, and since July 1, 1887.

p Including Dakota since August 20, 1883.

q Part of California from October 1, 1883, to July 31, 1884, and since July 1, 1887; including Utah from August 1, 1884, to June 30, 1887.

r Including Maine and Vermont since July 1, 1887.

s Including Arizona since September 5, 1883.

t Including Alaska since December 27, 1872, and Washington Territory since September 1, 1883.

u Part of the collection district of Connecticut since July 1, 1887.

v Part of the collection district of Montana from August 20, 1883, to July 31, 1884, and since July 1, 1887; part of the collection district of Nevada from August 1, 1884, to June 30, 1887.

w Part of the collection district of New Hampshire since July 1, 1887.

x Part of the collection district of Oregon since September 1, 1883.

y Part of the collection district of Colorado since August 15, 1883.

DIVISION OF DISTILLED SPIRITS.

The statements under the above heading relating to the fiscal year ended June 30, 1889, exhibit the number of grain, molasses, and fruit distilleries which were registered and operated in each State and collection district; the number and capacity of the grain and molasses distilleries in operation at the beginning of each month in the year and of the three following months; the number of grain distilleries, classified according to their different capacities, registered and operated in each district and State; the quantities and several kinds of grain and other materials used in the production of distilled spirits in each State and collection district; the different kinds of fruit brandy produced during the year in each State and collection district; the quantity of distilled spirits, in proof-gallons, rectified in the several districts and States; and the number of cattle and hogs fed at the registered grain distilleries, together with other items.

DISTILLERIES REGISTERED AND OPERATED.

The following statement shows the number of distilleries registered and operated during the fiscal year ended June 30, 1889:

States and Territories.	Grain.		Molasses.		Fruit.		Total registered.	Total operated.
	Registered.	Operated.	Registered.	Operated.	Registered.	Operated.		
Alabama	1	1	.....	.....	63	63	64	64
Arkansas	33	31	.....	.....	54	54	87	85
California	2	2	.....	.....	273	260	275	262
Connecticut	1	1	.....	.....	52	52	53	53
Georgia	87	82	.....	.....	95	95	182	177
Illinois	21	18	.....	.....	23	20	44	38
Indiana	11	11	.....	.....	56	56	67	67
Iowa	.....	.....	.....	.....	3	3	3	3
Kansas	.....	.....	.....	.....	1	1	1	1
Kentucky	348	297	1	1	299	286	648	584
Louisiana	.....	.....	.....	.....	12	12	12	12
Maryland	26	23	.....	.....	39	39	65	62
Massachusetts	1	1	8	8	6	6	15	15
Minnesota	2	2	.....	.....	.....	.....	2	2
Missouri	34	30	.....	.....	55	49	89	79
Nebraska	3	1	.....	.....	.....	.....	3	1
New Mexico	.....	.....	.....	.....	6	5	6	5
New Hampshire	.....	.....	1	1	1	1	2	2
New Jersey	1	1	.....	.....	71	71	72	72
New York	2	2	.....	.....	56	56	58	58
North Carolina	524	470	.....	.....	863	863	1,387	1,333
Ohio	31	25	.....	.....	43	43	74	68
Oregon	2	2	.....	.....	9	9	11	11
Pennsylvania	104	96	.....	.....	20	20	124	116
South Carolina	15	15	.....	.....	14	14	29	29
Tennessee	84	71	.....	.....	245	245	329	316
Texas	7	7	.....	.....	18	18	25	25
Virginia	91	70	.....	.....	710	699	801	769
West Virginia	4	4	.....	.....	39	32	43	36
Wisconsin	5	4	.....	.....	.....	.....	5	4
Total	1,440	1,267	10	10	3,126	3,072	4,576	4,349

FRUIT DISTILLERIES REGISTERED AND OPERATED.

STATEMENT SHOWING THE NUMBER OF FRUIT DISTILLERIES REGISTERED AND OPERATED DURING THE FISCAL YEAR ENDED JUNE 30, 1889, BY COLLECTION DISTRICTS.

Districts.	Registered.	Operated.	Districts.	Registered.	Operated.
Alabama	63	63	New York—		
Arkansas	54	54	Fourteenth district	35	35
California—			Twenty-first district	7	7
First district	137	130	Twenty-eighth district	14	14
Fourth district	136	130	North Carolina—		
Connecticut	52	52	Fourth district	438	438
Georgia	95	95	Fifth district	425	425
Illinois—			New Mexico	6	5
Eighth district	15	12	Ohio—		
Thirteenth district	8	8	First district	6	6
Indiana—			Tenth district	15	15
Sixth district	14	14	Eleventh district	13	13
Seventh district	42	42	Eighteenth district	9	9
Iowa—			Oregon	9	9
Fourth district	3	3	Pennsylvania—		
Kansas	1	1	First district	14	14
Kentucky—			Ninth district	2	2
Second district	92	90	Twelfth district	2	2
Fifth district	43	40	Twenty-third district	2	2
Sixth district	4	4	South Carolina	14	14
Seventh district	51	51	Tennessee—		
Eighth district	109	101	Second district	31	31
Louisiana	12	12	Fifth district	214	214
Maryland	39	39	Texas—		
Massachusetts—			Third district	5	5
Third district	6	6	Fourth district	13	13
Missouri—			Virginia—		
First district	40	37	Second district	139	139
Sixth district	15	12	Sixth district	571	560
New Hampshire	1	1	West Virginia	39	32
New Jersey—					
First district	24	24	Total	3,126	3,072
Fifth district	47	47			

STATEMENT SHOWING THE NUMBER AND CAPACITY OF GRAIN AND MOLASSES DISTILLERIES IN OPERATION AT THE BEGINNING OF EACH MONTH DURING THE FISCAL YEAR ENDED JUNE 30, 1889, AND THE FIRST THREE MONTHS OF THE PRESENT FISCAL YEAR.

Months.	Number of distilleries.		Capacity of grain distilleries.		Capacity of molasses distilleries.		Total spirit-producing capacity per day.
	Grain.	Molasses.	Grain.	Spirits.	Molasses.	Spirits.	
			Bushels.	*Gallons.*	*Gallons.*	*Gallons.*	*Gallons.*
July	463	7	35,083	140,975	7,220	6,141	147,116
August	338	5	29,969	126,143	5,556	4,726	130,869
September	399	5	33,294	141,963	4,465	3,798	145,761
October	455	8	56,560	242,045	7,718	6,564	248,609
November	530	8	63,397	270,038	9,282	7,889	277,927
December	640	9	74,401	308,869	9,389	7,982	316,851
January	747	9	84,351	341,209	9,950	8,459	349,668
February	811	9	91,910	368,428	8,565	7,282	375,710
March	821	6	96,396	376,921	4,243	3,607	380,528
April	864	6	95,641	377,797	3,806	3,236	381,033
May	774	6	94,157	381,916	3,556	3,024	384,940
June	677	6	77,992	311,604	4,603	3,906	315,510
July	484	6	52,197	216,747	4,476	3,800	220,547
August	397	4	41,216	172,374	2,544	2,162	174,536
September	376	5	40,946	172,526	3,574	3,037	175,563

GRAIN AND MOLASSES DISTILLERIES IN OPERATION SEPTEMBER 1, 1880 TO 1889.

COMPARATIVE STATEMENT SHOWING THE NUMBER AND CAPACITY OF GRAIN AND MOLASSES DISTILLERIES IN OPERATION ON THE 1ST DAY OF SEPTEMBER IN EACH OF THE YEARS 1880 TO 1889, INCLUSIVE.

Date.	Number of distilleries.		Capacity of grain distilleries.		Capacity of molasses distilleries.		Total spirit-producing capacity per day.
	Grain.	Molasses.	Grain.	Spirits.	Molasses.	Spirits.	
			Bushels.	*Gallons.*	*Gallons.*	*Gallons.*	*Gallons.*
September 1, 1880	372	6	69,013	275,364	8,899	7,564	282,928
September 1, 1881	298	5	70,103	272,806	8,573	7,287	280,093
September 1, 1882	198	7	57,755	227,973	10,426	8,861	236,834
September 1, 1883	387	7	56,859	224,107	8,721	6,818	230,925
September 1, 1884	294	8	47,855	189,308	8,814	7,424	196,732
September 1, 1885	212	8	42,594	174,295	7,122	6,054	180,349
September 1, 1886	305	9	46,180	181,223	8,353	7,524	188,747
September 1, 1887	293	8	50,355	199,100	6,460	5,493	204,593
September 1, 1888	399	5	33,294	141,963	4,465	3,798	145,761
September 1, 1889	376	5	40,946	172,526	3,574	3,037	175,563

CAPACITIES OF GRAIN DISTILLERIES REGISTERED AND OPERATED.

STATEMENT SHOWING THE NUMBER OF GRAIN DISTILLERIES OF DIFFERENT CAPACITIES REGISTERED AND OPERATED DURING THE FISCAL YEAR ENDED JUNE 30, 1889, BY COLLECTION DISTRICTS.

Districts.	Daily spirit capacity not exceeding 30 gallons.		Daily grain capacity not exceeding 5 bushels.		Daily grain capacity exceeding 5 bushels and not exceeding 10 bushels.		Daily grain capacity exceeding 10 bushels and not exceeding 20 bushels.		Daily grain capacity exceeding 20 bushels and not exceeding 40 bushels.		Daily grain capacity exceeding 40 bushels and not exceeding 60 bushels.		Daily grain capacity exceeding 60 bushels and not exceeding 100 bushels.		Daily grain capacity exceeding 100 bushels and not exceeding 500 bushels.		Daily grain capacity exceeding 500 bushels.		Total.	
	Registered.	Operated.	Registered.	Operated.	Registered.	Operated.	Registered.	Operated.	Registered.	Operated.	Registered.	Operated.	Registered.	Operated.	Registered.	Operated.	Registered.	Operated.	Registered.	Operated.
Alabama	1	1	1	1	.....	.....	.....	.....	.....	.....	.....	.....	.....	.....	.....	.....	.....	.....	1	1
Arkansas	27	25	7	7	18	17	6	5	1	1	1	1	.....	.....	.....	.....	.....	.....	33	31
California:																				
First district	1	1	1	1	.....	.....	.....	.....	.....	.....	.....	.....	.....	.....	1	1	.....	.....	2	2
Connecticut	.....	.....	.....	.....	.....	.....	.....	.....	.....	.....	.....	.....	1	1	.....	.....	.....	.....	1	1
Georgia	61	56	39	36	25	23	3	3	15	15	5	5	.....	.....	.....	.....	.....	.....	87	82
Illinois:																				
First district	.....	.....	.....	.....	.....	.....	.....	.....	.....	.....	1	1	.....	.....	1	1	4	3	6	5
Fifth district	.....	.....	.....	.....	.....	.....	.....	.....	.....	.....	.....	.....	.....	.....	.....	.....	10	9	10	9
Eighth district	.....	.....	.....	.....	.....	.....	.....	.....	.....	.....	1	1	.....	.....	.....	.....	2	2	3	3
Thirteenth district	.....	.....	.....	.....	.....	.....	.....	.....	.....	.....	.....	.....	.....	.....	2	1	.....	.....	2	1
Indiana:																				
Sixth district	.....	.....	.....	.....	.....	.....	.....	.....	2	2	1	1	.....	.....	1	1	3	3	7	7
Seventh district	1	1	.....	.....	2	2	1	1	.....	.....	.....	.....	.....	.....	.....	.....	1	1	4	4
Kentucky:																				
Second district	66	56	14	10	49	42	6	4	.....	.....	.....	.....	5	4	12	9	5	5	91	74
Fifth district	10	10	.....	.....	9	9	4	4	6	4	2	2	18	15	32	30	15	15	86	79
Sixth district	1	1	.....	.....	5	.....	3	3	3	3	.....	.....	2	2	7	6	7	7	22	21
Seventh district	15	13	10	10	5	3	1	1	5	2	3	2	6	6	10	9	7	7	47	40
Eighth district	75	65	54	44	18	18	6	4	7	4	3	2	4	4	7	4	3	3	102	88
Maryland	5	4	1	.....	4	4	6	6	6	4	1	1	1	1	3	3	4	4	26	23
Massachusetts:																				
Third district	.....	.....	.....	.....	.....	.....	.....	.....	.....	.....	.....	.....	.....	.....	1	1	.....	.....	1	1
Minnesota	.....	.....	.....	.....	.....	.....	.....	.....	.....	.....	.....	.....	1	1	.....	.....	1	1	2	2
Missouri:																				
First district	12	9	2	1	9	7	1	1	2	2	.....	.....	.....	.....	.....	.....	1	1	15	12
Sixth district	8	8	3	3	5	5	2	2	5	4	.....	.....	3	3	.....	.....	1	1	19	18
New York:																				

CAPACITIES OF GRAIN DISTILLERIES REGISTERED AND OPERATED—Continued.

STATEMENT SHOWING THE NUMBER OF GRAIN DISTILLERIES OF DIFFERENT CAPACITIES REGISTERED AND OPERATED, ETC.—Continued.

Districts.	Daily spirit capacity not exceeding 30 gallons.		Daily grain capacity not exceeding 5 bushels.		Daily grain capacity exceeding 5 bushels and not exceeding 10 bushels.		Daily grain capacity exceeding 10 bushels and not exceeding 20 bushels.		Daily grain capacity exceeding 20 bushels and not exceeding 40 bushels.		Daily grain capacity exceeding 40 bushels and not exceeding 60 bushels.		Daily grain capacity exceeding 60 bushels and not exceeding 100 bushels.		Daily grain capacity exceeding 100 bushels and not exceeding 500 bushels.		Daily grain capacity exceeding 500 bushels.		Total.	
	Registered.	Operated.	Registered.	Operated.	Registered.	Operated.	Registered.	Operated.	Registered.	Operated.	Registered.	Operated.	Registered.	Operated.	Registered.	Operated.	Registered.	Operated.	Registered.	Operated.
New Jersey:																				
Fifth district	.....	.....	.....	.....	.....	.....	.....	.....	.....	.....	.....	.....	.....	.....	.....	.....	1	1	1	1
North Carolina:																				
Fourth district	126	75	91	69	14	9	2	1	1	1	.....	.....	.....	.....	.....	.....	.....	.....	108	80
Fifth district	405	381	413	387	.....	.....	.....	.....	2	2	.....	.....	1	1	.....	.....	.....	.....	416	390
Nebraska	1	.....	.....	.....	1	.....	.....	.....	.....	.....	.....	.....	.....	.....	.....	.....	2	1	3	1
Ohio:																				
First district	.....	.....	.....	.....	.....	.....	.....	.....	.....	.....	.....	.....	.....	.....	2	2	6	4	8	6
Tenth district	1	1	.....	.....	1	1	1	1	1	1	1	1	.....	.....	.....	.....	.....	.....	4	4
Eleventh district	2	1	1	1	1	.....	3	3	1	.....	1	1	.....	.....	.....	.....	3	2	10	7
Eighteenth district	2	2	.....	.....	4	4	2	2	3	2	.....	.....	.....	.....	.....	.....	.....	.....	9	8
Oregon	1	1	1	1	.....	.....	.....	.....	1	1	.....	.....	.....	.....	.....	.....	.....	.....	2	2
Pennsylvania:																				
First district	5	5	2	2	4	4	.....	.....	.....	.....	.....	.....	.....	.....	1	1	.....	.....	7	7
Ninth district	2	2	1	1	2	2	.....	.....	18	18	3	2	2	2	1	1	.....	.....	27	26
Twelfth district	9	9	.....	.....	11	11	7	6	1	1	.....	.....	.....	.....	.....	.....	.....	.....	19	18
Twenty-third district	5	5	.....	.....	9	8	4	3	23	20	1	1	3	2	7	7	4	4	51	45
South Carolina	11	11	7	7	4	4	.....	.....	3	3	1	1	.....	.....	.....	.....	.....	.....	15	15
Tennessee:																				
Second district	21	18	25	18	1	1	1	1	.....	.....	.....	.....	.....	.....	.....	.....	.....	.....	27	20
Fifth district	15	12	.....	.....	9	7	13	12	24	23	4	4	5	3	2	2	.....	.....	57	51
Texas:																				
Fourth district	6	6	1	1	2	2	4	4	.....	.....	.....	.....	.....	.....	.....	.....	.....	.....	7	7
Virginia:																				
Sixth district	80	59	58	46	22	15	2	1	7	7	1	.....	.....	.....	1	1	.....	.....	91	70
West Virginia	3	3	2	2	1	1	.....	.....	.....	.....	.....	.....	.....	.....	.....	.....	1	1	4	4
Wisconsin:																				
First district	1	.....	.....	.....	1	.....	1	1	1	1	.....	.....	.....	.....	2	2	.....	.....	5	4

CAPACITIES OF GRAIN DISTILLERIES REGISTERED AND OPERATED—Continued.

STATEMENT SHOWING THE NUMBER OF GRAIN DISTILLERIES OF DIFFERENT CAPACITIES REGISTERED AND OPERATED DURING THE FISCAL YEAR ENDED JUNE 30, 1889, BY STATES AND TERRITORIES.

States and Territories.	Daily spirit capacity not exceeding 30 gallons.		Daily grain capacity not exceeding 5 bushels.		Daily grain capacity exceeding 5 bushels and not exceeding 10 bushels.		Daily grain capacity exceeding 10 bushels and not exceeding 20 bushels.		Daily grain capacity exceeding 20 bushels and not exceeding 40 bushels.		Daily grain capacity exceeding 40 bushels and not exceeding 60 bushels.		Daily grain capacity exceeding 60 bushels and not exceeding 100 bushels.		Daily grain capacity exceeding 100 bushels and not exceeding 500 bushels.		Daily grain capacity exceeding 500 bushels.	
	Registered.	Operated.	Registered.	Operated.	Registered.	Operated.	Registered.	Operated.	Registered.	Operated.	Registered.	Operated.	Registered.	Operated.	Registered.	Operated.	Registered.	Operated.
Alabama	1	1	1	1														
Arkansas	27	25	7	7	18	17	6	5	1	1	1	1						
California	1	1	1	1											1	1		
Connecticut													1	1				
Georgia	61	56	39	36	25	23	3	3	15	15	5	5						
Illinois											2	2			3	2	16	14
Indiana	1	1			2	2	1	1	2	2	1	1			1	1	4	4
Kentucky	167	145	78	64	81	72	20	16	21	13	8	6	35	31	68	58	37	37
Maryland	5	4	1		4	4	6	6	6	4	1	1	1	1	3	3	4	4
Massachusetts															1	1		
Minnesota													1	1			1	1
Missouri	20	17	5	4	14	12	3	3	7	6			3	3			2	2
New York																	2	2
New Jersey																	1	1
North Carolina	531	456	504	456	14	9	2	1	3	3			1	1				
Nebraska	1				1												2	1
Ohio	5	4	1	1	6	5	6	6	5	3	2	2			2	2	9	6
Oregon	1	1	1	1					1	1								
Pennsylvania	21	21	3	3	26	25	11	9	42	39	4	3	5	4	9	9	4	4
South Carolina	11	11	7	7	4	4			3	3	1	1						
Tennessee	36	30	25	18	10	8	14	13	24	23	4	4	5	3	2	2		
Texas	6	6	1	1	2	2	4	4										
Virginia	80	59	58	46	22	15	2	1	7	7	1				1	1		
West Virginia	3	3	2	2	1	1											1	1
Wisconsin	1				1		1	1	1	1					2	2		
Total	979	841	734	648	231	199	79	69	138	121	30	26	52	45	93	82	83	77

COMPARATIVE STATEMENT OF DISTILLERIES REGISTERED AND OPERATED.

The whole number of grain distilleries registered during the fiscal year ended June 30, 1889, was 1,440, of which number 1,267 were operated.

The numbers registered and operated during the fiscal year ended June 30, 1888, were 1,300 and 1,029, respectively, showing an increase during the last fiscal year of 140 in the number registered and of 238 in the number operated.

The larger increase, both in the number registered and in the number operated, occurred in the class of distilleries having the smaller capacities for the production of spirits; there having been an increase of 142 in the number of distilleries of this class registered and of 170 in the number operated.

In the class of larger distilleries there was a decrease of 2 in the number registered, but there was an increase of 68 in the number operated.

During the fiscal year ended June 30, 1888, 1,070 distilleries of the smaller class, varying in daily grain capacity from not over 5 bushels to not over 60 bushels each, were registered; and of this number, 893, or 83 per cent., were operated.

Of the larger distilleries, having daily grain capacities varying from 60 bushels to several thousands of bushels, 230 were registered, and 136, or 59 per cent., were operated.

During the fiscal year ended June 30, 1889, of the smaller distilleries 1,212 were registered, and 1,063, or nearly 88 per cent., were operated.

Of the larger distilleries 228 were registered, and 204, or over 89 per cent., were operated.

There were 10 rum distilleries registered, and 10 operated, the same number reported for the previous fiscal year.

There were 3,126 fruit distilleries registered, and 3,072 operated, an increase of 442 in the number registered and of 465 in the number operated, during the fiscal year.

The total number of grain, molasses, and fruit distilleries registered and operated during the year is 4,576 and 4,349, respectively.

MATERIALS USED FOR THE PRODUCTION OF DISTILLED SPIRITS.

STATEMENT SHOWING THE QUANTITIES OF GRAIN AND OTHER MATERIALS USED IN THE PRODUCTION OF DISTILLED SPIRITS DURING THE FISCAL YEAR ENDED JUNE 30, 1889, BY COLLECTION DISTRICTS.

Districts.	Malt.	Wheat.	Barley.	Rye.	Corn.	Oats.	Mill feed.	Molasses.	Other material.	Total.	
	Bushels.	*Bushels.*	*Bushels.*	*Bushels.*	*Bushels.*	*Bushels.*	*Bushels.*	*Gallons.*	*Bushels.*	*Bushels.*	*Gallons.*
Alabama	85				596		6			687	
Arkansas	2,548	64		1,621	24,779		6			29,018	
California:											
First district	9,902	31,747	633	18,365	518					61,165	
Fourth district	54				288					342	
Connecticut	2,118			8,825	11,296					22,239	
Georgia	21,753				129,042					150,795	
Illinois:											
First district	157,670			134,751	1,311,785	424				1,604,630	
Fifth district	506,170			145,146	4,295,785	6,147				4,953,198	
Eighth district	46,269			28,063	388,275	884				463,491	
Thirteenth district	2,054			915	13,633					16,602	
Indiana:											
Sixth district	53,690			73,842	405,613	6,439	31,540	315		571,124	315
Seventh district	65,221	507		13,833	600,640	435				680,636	
Kentucky:											
Second district	73,331	30		41,195	493,236		20			607,812	
Fifth district	339,523	48	16	471,590	2,359,865	147	1,474			3,172,683	
Sixth district	99,386	3,954		147,043	724,328	2,048		33,408		976,759	33,408
Seventh district	97,240			194,783	616,358	342		9		908,723	9
Eighth district	42,100	288		78,917	266,379					387,684	
Maryland	43,317			343,227	134,935	1,442	334			523,255	
Massachusetts	836			10,878	9,127			1,886,712		20,841	1,886,712
Minnesota	24,692	3,236		7,261	233,141					268,330	
Missouri:											
First district	13,048	296	10,218	10,799	264,665	3,213	13			302,252	
Sixth district	26,624	813	38	10,503	228,180					265,658	
Nebraska	43,987			17,473	408,325					469,785	
New Hampshire								29,175			29,175
New Jersey:											
Fifth district	32,425			48,638	48,638					129,701	
New York:											
First district	76,170			143,160	143,468					362,798	
Twenty-eighth district	37,750			55,628	61,723					155,101	
North Carolina:											
Fourth district	2,287	971		1,458	30,158		200			35,074	
Fifth district	28,909	8		45,044	223,971					297,927	

MATERIALS USED FOR THE PRODUCTION OF DISTILLED SPIRITS—Continued.

STATEMENT SHOWING THE QUANTITIES OF GRAIN AND OTHER MATERIALS USED IN THE PRODUCTION OF DISTILLED SPIRITS, ETC.—Cont'd.

Districts.	Malt.	Wheat.	Barley.	Rye.	Corn.	Oats.	Mill feed.	Molasses.	Other material.	Total.	
	Bushels.	*Bushels.*	*Bushels.*	*Bushels.*	*Bushels.*	*Bushels.*	*Bushels.*	*Gallons.*	*Bushels.*	*Bushels.*	*Gallons.*
Ohio:											
First district	195,813	536	9,566	227,236	1,245,224	1,054	25,433			1,704,852	
Tenth district	643			2,942	5,311		1,062			9,958	
Eleventh district	8,885	431		6,796	98,431	185	5,302			120,030	
Eighteenth district	883	447	48	7,364	4,056	252			1,785	14,835	
Oregon	108	2,263		20	404					2,795	
Pennsylvania:											
First district	18,061			61,274	17,743			1,485		97,078	1,485
Ninth district	6,150	884		68,832	15,520	61				91,447	
Twelfth district	511	177	210	14,714	3,654					19,266	
Twenty-third district	101,543	448	91	660,547	82,373	448	337			845,787	
South Carolina	1,314			413	11,643					13,370	
Tennessee:											
Second district	1,702	27		1,009	15,220		31			17,989	
Fifth district	29,144			24,720	260,323	17	7,827			322,031	
Texas:											
Fourth district	124	36		28	1,093		4			1,285	
Virginia:											
Sixth district	5,008	321		25,119	48,558	63			57	79,126	
West Virginia	6,776			59,881	2,377					69,034	
Wisconsin:											
First district	16,390	1,262	769	46,064	79,215	31				143,731	
Total	2,243,214	48,279	21,569	3,259,917	15,319,862	23,633	73,589	1,951,104	1,842	20,990,924	1,951,104

MATERIALS USED FOR THE PRODUCTION OF DISTILLED SPIRITS—Continued.

STATEMENT SHOWING THE QUANTITIES OF GRAIN AND OTHER MATERIALS USED IN THE PRODUCTION OF DISTILLED SPIRITS DURING THE FISCAL YEAR ENDED JUNE 30, 1889, BY STATES AND TERRITORIES.

States.	Malt.	Wheat.	Barley.	Rye.	Corn.	Oats.	Mill-feed.	Molasses.	Other material.	Total.	
	Bushels.	*Bushels.*	*Bushels.*	*Bushels.*	*Bushels.*	*Bushels.*	*Bushels.*	*Gallons.*	*Bushels.*	*Bushels.*	*Gallons.*
Alabama	85				596		6			687	
Arkansas	2,548	64		1,621	24,779		6			29,018	
California	9,956	31,747	633	18,365	806					61,507	
Connecticut	2,118			8,825	11,296					22,239	
Georgia	21,753				129,042					150,795	
Illinois	712,163			308,875	6,009,428	7,455				7,037,921	
Indiana	118,911	507		87,675	1,006,253	6,874	31,540	315		1,251,760	315
Kentucky	651,580	4,320	16	933,528	4,460,186	2,537	1,494	33,417		6,053,661	33,417
Maryland	43,317			343,277	134,935	1,442	334			523,255	
Massachusetts	836			10,878	9,127			1,886,712		20,841	1,886,712
Minnesota	24,692	3,236		7,261	233,141					268,330	
Missouri	39,672	609	10,256	21,302	492,845	3,213	13			567,910	
Nebraska	43,987			17,473	408,325					469,785	
New Hampshire								29,175			29,175
New Jersey	32,425			48,638	48,638					129,701	
New York	113,920			198,788	205,191					517,899	
North Carolina	31,196	974		46,502	254,129		200			333,001	
Ohio	206,224	1,404	9,614	244,338	1,353,022	1,491	31,797		1,785	1,849,675	
Oregon	108	2,263		20	404					2,795	
Pennsylvania	126,265	1,509	301	805,367	119,290	509	337	1,485		1,053,578	1,485
South Carolina	1,314			413	11,643					13,370	
Tennessee	30,846	27		25,729	275,543	17	7,858			340,020	
Texas	124	36		28	1,093		4			1,285	
Virginia	5,008	321		25,119	48,558	63			57	79,126	
West Virginia	6,776			59,881	2,377					69,034	
Wisconsin	16,390	1,262	769	46,064	79,215	31				143,731	
Total	2,242,214	48,279	21,589	3,259,917	15,319,862	23,632	73,589	1,951,104	1,842	20,990,924	1,951,104

The average yield per bushel of grain was $\frac{87,887,456}{20,990,924}$=4.18 + gallons of spirits.

The average yield per gallon of molasses was $\frac{1,471,054}{1,951,104}$=.753 + gallons of rum.

COMPARATIVE STATEMENT OF MATERIALS USED AND SPIRITS PRODUCED THE LAST TEN (FISCAL) YEARS.

Year.	Grain used.	Spirits produced.	Molasses used.	pro
	Bushels.	*Gallons.*	*Gallons.*	*Gal*
1880	24, 006, 359	87, 915, 969	3, 110, 190	2,4
1881	31, 291, 175	115, 609, 644	2, 710, 397	2,1
1882	27, 459, 095	104, 149, 077	2, 121, 804	1,7
1883	18, 644, 787	72. 235, 175	2, 373, 106	1,8
1884	18, 927, 963	73. 724, 581	2, 259, 536	1,7
1885	17, 865, 203	72, 834, 198	2, 719. 416	2,0
1886	19, 195, 332	78, 544, 428	2, 308, 130	1,7
1887	17, 959, 565	75, 974, 376	2, 428, 783	1,8
1888	16, 122, 509	68, 388, 160	2. 519, 494	1,8
1889	20, 990, 924	87, 887, 456	1, 951, 104	1,4
Total	212, 462, 931	837, 263, 064	24, 591, 870	18,8
Average	21, 246, 293	83, 726,306	2, 450, 187	1,8

The quantity of grain used in the production of spirits during fiscal year ended June 30, 1889 (20,990,924 bushels), is an increa 4,868,415 bushels over the amount used in the preceding fiscal (16,122,509 bushels), and is 255,369 bushels less than the ave (21,246,293 bushels) for the last ten years.

The number of gallons of spirits produced from grain during the (87,887,456 gallons) shows an increase of 19,499,296 gallons over the duct (68,388,160 gallons) of the year ended June 30, 1888, and is 4,16 gallons more than the average produced (83,726,306 gallons) for the ten years.

The yield of spirits from each bushelof grain is 4.18+ gallons. yield for the two preceding years was 4.23+ for 1887 and 4.24+ for

The quantity of molasses used for the production of rum during fiscal year (1,951,104 gallons) shows a decrease of 568,390 gallons the quantity used in the previous year (2,519,494 gallons), and is 49 gallons less than the average (2,450,187 gallons) for the last ten y

The quantity of rum distilled from molasses during the fiscal (1,471,054 gallons) shows a decrease of 420,192 gallons from the pro of the previous year (1,891,246 gallons), and is 416,510 gallons less the average product (1,887,564 gallons) for the last ten years.

DIFFERENT KINDS OF FRUIT BRANDY PRODUCED DURING THE Y

STATEMENT SHOWING THE QUANTITY OF EACH KIND OF FRUIT BRANDY PROD DURING THE FISCAL YEAR ENDED JUNE 30, 1889, BY COLLECTION DISTRIC

Districts.	Apple brandy.	Peach brandy.	Grape brandy.	T
	Gallons.	*Gallons.*	*Gallons.*	*Ga*
Alabama	7, 018	171	71	
Arkansas	2, 922	4, 935	336	
First California	.....	1, 342	440, 183	4
Fourth California	380	370	473, 298	4
Connecticut	16, 734	.....	.....	
Georgia	5, 234	854	181	
Eighth Illinois	969	43	1, 375	
Thirteenth Illinois	6, 334	527	25	
Sixth Indiana	4, 174	433	245	
Seventh Indiana	46, 704	1, 839	128	
Fourth Iowa	575	.....	.....	
Kansas	751	.....	.....	
Second Kentucky	64, 781	1, 041	23	
Fifth Kentucky	64, 439	3, 388	30	

QUANTITY OF EACH KIND OF FRUIT BRANDY PRODUCED, ETC.—Continued.

Districts.	Apple brandy.	Peach brandy.	Grape brandy.	Total.
	Gallons.	*Gallons.*	*Gallons.*	*Gallons.*
Sixth Kentucky	2,007	45	90	2,142
Seventh Kentucky	6,979	43	.....	7,022
Eighth Kentucky	15,183	152	.....	15,335
Louisiana	311	1,152	.....	1,463
Maryland	6,140	28,074	.....	34,214
Third Massachusetts	5,688	.....	.....	5,688
First Missouri	1,228	434	378	2,040
Sixth Missouri	7,649	702	35	8,386
New Hampshire	18	.....	.....	18
First New Jersey	26,120	.....	27	26,147
Fifth New Jersey	73,741	133	.....	73,874
New Mexico	.....	.....	2,279	2,279
Fourteenth New York	48,243	.....	.....	48,243
Twenty-first New York	2,968	.....	.....	2,968
Twenty-eighth New York	23,890	.....	4,465	28,355
Fourth North Carolina	29,304	914	927	31,145
Fifth North Carolina	14,427	694	8	15,129
First Ohio	15,890	72	781	16,743
Tenth Ohio	532	.....	18,855	19,387
Eleventh Ohio	3,214	244	.....	3,458
Eighteenth Ohio	1,336	20	218	1,574
Oregon	1,606	.....	144	1,750
First Pennsylvania	9,791	.....	.....	9,791
Ninth Pennsylvania	22,639	.....	.....	22,639
Twelfth Pennsylvania	210	.....	.....	210
Twenty-third Pennsylvania	366	.....	.....	366
South Carolina	350	287	33	670
Second Tennessee	4,640	47	.....	4,687
Fifth Tennessee	179,512	1,980	.....	181,492
Third Texas	.....	87	.....	87
Fourth Texas	239	1,981	.....	2,220
Second Virginia	6,800	35	58	6,893
Sixth Virginia	35,949	238	385	36,572
West Virginia	10,128	53	24	10,205

STATEMENT SHOWING THE QUANTITY OF EACH KIND OF FRUIT BRANDY PRODUCED DURING THE FISCAL YEAR ENDED JUNE 30, 1889, BY STATES.

States.	Apple brandy.	Peach brandy.	Grape brandy.	Total.
	Gallons.	*Gallons.*	*Gallons.*	*Gallons.*
Alabama	7,018	171	71	7,260
Arkansas	2,922	4,935	336	8,193
California	380	1,712	913,481	915,573
Connecticut	16,734	.....	.....	16,734
Georgia	5,234	854	181	6,269
Illinois	7,303	570	1,400	9,273
Indiana	50,878	2,272	373	53,523
Iowa	575	.....	.....	575
Kansas	751	.....	.....	751
Kentucky	153,389	4,664	143	158,196
Louisiana	311	1,152	.....	1,463
Maryland	6,140	28,074	.....	34,214
Massachusetts	5,688	.....	.....	5,688
Missouri	8,877	1,136	413	10,426
New Hampshire	18	.....	.....	18
New Jersey	99,861	133	27	100,021
New Mexico	.....	.....	2,279	2,279
New York	75,101	.....	4,465	79,566
North Carolina	43,731	1,608	935	46,274
Ohio	20,972	336	19,854	41,162
Oregon	1,606	.....	144	1,750
Pennsylvania	33,006	.....	.....	33,006
South Carolina	350	287	33	670
Tennessee	184,152	2,027	.....	186,179
Texas	239	2,068	.....	2,307
Virginia	42,749	273	443	43,465
West Virginia	10,128	53	24	10,205
Total	778,113	52,325	944,602	1,775,040

SPIRITS RECTIFIED DURING THE YEAR ENDED APRIL 30, 1889.

STATEMENT SHOWING THE QUANTITY OF SPIRITS RECTIFIED IN THE UNITED STATES DURING THE YEAR ENDED APRIL 30, 1889, BY COLLECTION DISTRICTS.

Districts.	Quantities.	Districts.	Quantities.
	Gallons.		*Gallons.*
Alabama	120, 063. 93	New Jersey:	
California:		First district	5, 096. 50
First district	2, 391, 784. 67	Fifth district	292, 721. 56
Fourth district (and Nevada)	183, 741. 50	New Mexico	23, 967. 00
Colorado (and Wyoming)	93, 709. 50	New York:	
Connecticut (and Rhode Island)	316, 581. 50	First district	1, 353, 745. 77
Georgia	77, 962. 00	Second district	6, 833, 378. 98
Illinois:		Third district	860, 672. 41
First district	4, 873, 028. 49	Fourteenth district	407, 823. 93
Fifth district	1, 209, 998. 90	Twenty-first district	230, 727. 00
Eighth district	15, 840. 50	Twenty-eighth district	1, 405, 616. 90
Thirteenth district	27, 469. 50	North Carolina:	
Indiana:		Fourth district	19, 763. 00
Sixth district	75, 224. 50	Fifth district	119, 234. 00
Seventh district	1, 430, 213. 15	Oregon (and Washington)	137, 695. 83
Iowa:		Ohio:	
Third district	43, 932. 92	First district	11, 219, 298. 65
Fourth district	11, 744. 50	Tenth district	292, 456. 51
Kansas	3, 534. 50	Eleventh district	248, 664. 00
Kentucky:		Eighteenth district	522, 622. 50
Second district	60, 748. 00	Pennsylvania:	
Fifth district	1, 399, 050. 28	First district	6, 585, 989. 25
Sixth district	3, 213, 742. 47	Ninth district	76, 560. 50
Seventh district	6, 058. 50	Twelfth district	145. 536. 02
Eighth district		Twenty-third district	741, 489. 00
Louisiana	758, 271. 50	Tennessee:	
Maryland (and Delaware)	3, 299, 961. 50	Second district	77, 436. 50
Massachusetts	2, 545, 381. 47	Fifth district	168, 500. 50
Michigan:		Texas:	
First district	253, 007. 00	Third district	223, 545. 00
Fourth district	16, 758. 50	Fourth district	3, 889. 00
Minnesota	166, 019. 50	Virginia:	
Missouri:		Second district	575, 244. 00
First district	3, 549, 618. 75	Sixth district	103, 937. 00
Sixth district	575, 169. 15	West Virginia	94, 004. 50
Montana (and Utah)	28, 840. 00	Wisconsin:	
Nebraska	235, 272. 00	First district	1, 333, 575. 13
New Hampshire, Maine, and Vermont	5, 732. 50	Second district	12, 621. 50
		Total	61, 013, 965. 63

STATEMENT SHOWING THE QUANTITY OF SPIRITS RECTIFIED IN THE UNITED STATES DURING THE YEAR ENDED APRIL 30, 1889, BY STATES AND TERRITORIES.

States and Territories.	Quantities.	States and Territories.	Quantities.
	Gallons.		*Gallons.*
Alabama	120, 063. 93	Montana (and Utah)	28, 840. 00
Arkansas		Nebraska	235, 272. 00
California (and Nevada)	2, 575, 526. 17	New Hampshire (and Vermont)	5, 732. 50
Colorado (and Wyoming)	93, 709. 50	New Jersey	297, 820. 06
Connecticut (and Rhode Island)	316, 581. 50	New Mexico	23, 967. 00
Florida		New York	11, 091, 958. 99
Georgia	77, 962. 00	North Carolina	138, 997. 00
Illinois	6, 126, 037. 39	Ohio	12, 283, 089. 66
Indiana	1, 505, 437. 65	Oregon (and Washington)	137, 695. 83
Iowa	55, 677. 42	Pennsylvania	7, 549, 574. 77
Kansas	3, 534. 50	Tennessee	245, 937. 00
Kentucky	4, 679, 597. 25	Texas	227, 434. 00
Louisiana	758, 271. 50	Virginia	679, 181. 00
Maryland	3, 299, 961. 50	West Virginia	94, 004. 50
Massachusetts	2, 545, 381. 47	Wisconsin	1, 346, 196. 63
Michigan	269, 765. 50		
Minnesota	166, 019. 50	Total	61, 013, 965. 63
Missouri	4, 124, 787. 90		

STOCK FED AT DISTILLERIES

The following statement shows the number of cattle and hogs fed at registered grain distilleries, with their average and total increase in weight, during the fiscal year ended June 30, 1889, by collection districts:

Districts.	Number of cattle fed.	Total increase in weight.	Average increase in weight.	Number of hogs fed.	Total increase in weight.	Average increase in weight.	Total increase in weight of cattle and hogs.
Arkansas	112	20,300	181+	1,062	89,880	84+	110,180
First California	.....	.....	.....	1,410	302,150	215	303,150
Fourth California	.....	.....	.....	023	10	.....	10
Connecticut	102	30,600	300	.....	.....	.....	30,600
Georgia	412	61,800	150	2,700	243,000	90	304,800
First Illinois	870	134,850	155	.....	.....	.....	134,850
Fifth Illinois	17,675	4,608,750	260+	.....	.....	.....	4,608,750
Eighth Illinois	1,630	293,474	180+	.....	.....	.....	293,474
Sixth Indiana	2,000	585,000	292+	20	2,000	100	587,000
Seventh Indiana	2,635	553,350	210	.....	.....	.....	553,350
Second Kentucky	4,491	878,004	195+	1,279	63,909	49+	941,913
Fifth Kentucky	7,072	1,299,096	183+	2,806	330,408	117+	1,629,504
Sixth Kentucky	4,637	1,140,140	245+	1,822	96,670	52+	1,236,810
Seventh Kentucky	3,323	796,750	239+	641	84,540	131+	881,290
Eighth Kentucky	871	225,900	259+	8,683	72,836	8+	298,736
Maryland	65	12,100	186+	669	63,632	95+	75,732
Third Massachusetts	100	25,000	250	30	9,000	300	34,000
Minnesota	142	55,380	390	.....	.....	.....	55,380
First Missouri	75	26,550	354	502	47,188	94	73,738
Sixth Missouri	1,396	48,860	35	986	37,880	38+	86,740
Nebraska	2,014	494,000	245+	.....	.....	.....	494,000
Fifth New Jersey	317	88,760	280	.....	.....	.....	88,760
First New York	584	109,800	188+	.....	.....	.....	109,800
Fourth North Carolina	230	20,700	90	1,964	121,768	62	142,468
Fifth North Carolina	150	21,975	138+	2,080	124,270	59+	146,245
First Ohio	1,776	490,547	276+	58	11,600	200	502,147
Tenth Ohio	.....	.....	.....	64	1,408	22	1,408
Eleventh Ohio	.....	.....	.....	30	2,000	66+	2,000
Eighteenth Ohio	49	6,025	122+	242	13,620	56+	19,645
Oregon	.....	.....	.....	120	3,060	25+	3,060
Ninth Pennsylvania	214	37,028	173+	1,692	188,561	111+	225,589
Twelfth Pennsylvania	62	12,800	206+	449	36,900	82+	49,700
Twenty-third Pennsylvania	937	231,724	247+	1,497	66,053	44+	297,777
Second Tennessee	.....	.....	.....	428	38,428	89+	38,428
Fifth Tennessee	754	182,700	242+	3,768	312,700	82+	495,400
Fourth Texas	.....	.....	.....	115	5,750	50	5,750
Sixth Virginia	79	10,610	134+	963	94,735	98+	105,345
West Virginia	109	13,080	120	109	9,156	84	22,236
First Wisconsin	346	87,000	251+	97	1,400	200	88,400

The following statement shows the number of cattle and hogs fed [illegible] registered grain distilleries, arranged by States:

States.	Number of cattle fed.	Total increase in weight.	Average increase in weight.	Number of hogs fed.	Total increase in weight.	Average increase in weight.	Total increase in weight of cattle and hogs.
Arkansas	112	20,300	181+	1,062	89,880	84+	110,180
California	.....	.....	.....	1,433	303,160	211+	303,160
Connecticut	102	30,600	300	.....	.....	.....	30[illegible]600
Georgia	412	61,800	150	2,700	243,000	90	304[illegible]800
Illinois	20,175	5,037,074	249+	.....	.....	.....	5,037,074
Indiana	4,635	1,138,350	245+	20	2,000	100	1,140,350
Kentucky	20,394	4,339,890	212+	15,237	648,363	42+	4,988,253
Maryland	65	12,100	186+	669	63,632	95+	75,732
Massachusetts	100	25,000	250	30	9,000	300	34,000
Minnesota	142	55,380	390	.....	.....	.....	55,380
Missouri	1,471	75,410	51+	1,488	85,068	57+	160,478
Nebraska	2,014	494,000	245+	.....	.....	.....	494,000
New Jersey	317	88,760	280	.....	.....	.....	88,760
New York	584	109,800	188+	.....	.....	.....	109,800
North Carolina	389	42,675	109+	4,044	246,038	60+	288,713
Ohio	1,825	496,572	272+	394	28,628	72+	525,200
Oregon	.....	.....	.....	120	3,060	25+	3,060
Pennsylvania	1,213	281,552	232+	3,638	291,514	80+	573,066
Tennessee	754	182,700	242+	4,196	351,128	83+	533,828
Texas	.....	.....	.....	115	5,750	50	5,750
Virginia	79	10,610	134+	903	94,735	98+	105,345
West Virginia	109	13,080	120	109	9,156	84	22,236
Wisconsin	346	87,000	251+	007	1,400	200	88,400
Total	55,238	12,602,653	228+	36,225	2,475,512	68+	15,078,165

SUMMARY.

Number of cattle fed at registered grain distilleries in the United States		55,238
Total increase in weight of cattle	pounds..	12,602,653
Average increase in weight of cattle	do....	228+
Number of hogs fed at registered grain distilleries in the United States		36,225
Total increase in weight of hogs	pounds..	2,475,512
Average increase in weight of hogs	do....	68+
Total number of cattle and hogs fed		91,463
Total increase in weight of cattle and hogs	pounds..	15,078,165
Average increase in weight of cattle and hogs	do....	164+

TAXATION OF FRACTIONAL PARTS OF A GALLON OF DISTILLED SPIRITS.

The expediency of taxing all fractions of a gallon of distilled spirits has heretofore engaged the attention of this office, and recommendations have been made that authority be given to assess and collect monthly the tax upon the whole number of proof gallons, or of wine gallons when below proof, which the fractions of gallons removed during the month from each distillery warehouse may aggregate.

Upon consideration of the subject and of the ill effects of the present method of taxing fractions, I deem it proper to bring the matter again to the attention of the legislative power.

The law upon this subject is as follows: Any fractional part of a gallon of distilled spirits amounting to one-half gallon or over in a cask or package is taxed as a gallon; but any fractional part of a gallon less than one-half gallon in a cask or package is exempt from tax.

In ascertaining the contents of a package of distilled spirits which are either exactly at proof as defined in section 3249 Revised Statutes, or below proof, no fraction occurs other than one-half of a gallon;

but when the spirits are above proof the calculation of the proof gallons may result in a final fraction of any size.

As a matter of convenience in the computation and collection of the tax provision was made for taxing only even gallons, the fractions either being dropped or treated as a whole gallon as above stated. This was done, doubtless, upon the consideration also that the sum of the fractions dropped, and that of the fractions added to make a full gallon, would, on an average, be nearly or quite the same, and so neither gain nor loss would result from this method either to the tax-payer or to the Government.

It has not, however, so happened. The distiller is quite at liberty to use packages of any size, not below 10 gallons capacity, which he may choose, and to draw off his spirits at any rate or strength of proof which may suit his purpose. It is therefore perfectly feasible for him to so fill his packages as to constantly contain a large, and often the largest possible, untaxed fraction, a taxable fraction occurring only by some mischance.

This course has been pursued for many years with great success, especially by the large distillers who are producers of alcohols and pure spirits, and do not keep their product for any considerable length of time in distillery warehouse.

In many cases there are rectifying houses near at hand to which the spirits are removed from the distillery warehouse, upon payment of tax, where the spirits are drawn from the packages into the rectifying vats and the untaxed fractions are made available.

Spirits of the kinds which commonly lie in warehouse for long periods change both in volume and in proof, owing to natural causes, so that upon withdrawal from warehouse the fractions occur naturally, above or below the half, in accordance with the expectation of the statute. But the larger portion of the spirit product of the country is usually of the kinds not requiring to lie in bond, and in respect of which the portion of a gallon untaxed is a constant and never omitted gain to the producers.

The advantage derived in this way, and in the ordinary course of business, not being sufficient to satisfy many distillers, it is sought to be increased by warehousing their spirits in half barrels and smaller packages, instead of in barrels, the fraction of a proof gallon gained being thus doubled or even quadrupled.

The annual loss to the revenue arising from this adroit withholding of a portion of the taxed article from the operation of the law can not be accurately stated. But, aside from those packages whose fractions, taxed and untaxed, may in the aggregate equal each other, it is believed to be a fair estimate that a half million additional packages contain each a large portion of a gallon of spirits which escapes tax.

No cessation of the practice described is to be looked for under the law as it now stands. It is not to be expected that the producer will voluntarily pay a portion of the tax which it is open to him to escape. The effect of the practice is to stimulate competition in schemes to avoid the largest possible portion of the tax by the method indicated, or by others positively illicit.

Discontent is occasioned on the part of those who are unable to take advantage of the practice, as being subject, in a degree, to an unequal taxation; while the expense of collecting the tax, owing to the larger number of packages and the consequent greater labor of gauging, stamping, warehousing, and reporting them, is increased by the very cause which lessens the amount collected.

Such a change in the law as shall remove the opportunity for its e sion is plainly needed, and a provision for the taxation of all fracti of a gallon of spirits would, in my opinion, prove to be a valuable a effectual amendment; and I respectfully recommend that appropri legislation be had for that purpose.

REPORT OF THE MICROSCOPIST ON THE ANALYSES OF SUSPECT WHISKY.

During the past year many samples of whisky were sent in for an sis to ascertain whether they had been artificially colored by the ad tion of caramel or other coloring matter. To establish a standard which such samples could be judged, the collectors of internal reve of the ninth district of Pennsylvania and of the seventh district Kentucky were requested to obtain samples of one, two, three, a four year old whiskies direct from distillers who were known as not ploying any artificial means to either color or age their goods.

There appears to be a class of distillers who desire to market th product as soon as possible, and who, by heavily charring their barr adding a little caramel or prune-juice, or by some of the so-called ag processes, endeavor so to color their new and colorless whiskies as deceive the consumer.

FERMENTATION.

In the manufacture of both malt and distilled liquors the object is convert the starch of the grain employed, by suitable fermentation, i alcohol. In the one case a low percentage of alcohol is striven for, a in the other the maximum amount that is capable of being produce

Chemically speaking, fermentation takes place wherever an orga compound undergoes changes of composition under the influence o nitrogenous substance called a ferment, which acts in small quantit and yields nothing appreciable to the fermented substance. These ments are living minute vegetable cells, and different varieties are fou in the various fermentations with which we are familiar, viz, alcoho acetic, lactic, butyric, etc.

In normal alcoholic or spirituous fermentation we find the min vegetable cells commonly called yeast growing and multiplying, ass ilating the *sugar* or *glucose* found in the infusion or solution (whet the glucose is derived from the starch of the grain, by the action of other ferment called diastase, or artificially prepared), and excretin large proportion in the form of *carbonic acid* and *alcohol*.

Theoretically 105.3 parts of glucose, corresponding to 100 parts cane sugar, would produce about 51 parts of alcohol and 49 parts carbonic acid, but as a matter of fact Pasteur and other investigat have found that there were small quantities of other products prese so that the theoretical yield is not obtained.

The materials from which alcohol can be produced by fermentat may be arranged in three groups: first, grapes and other sweet fr which contain fermentable sugar or glucose, the expressed juice which at once enters into fermentation on exposure to air; second, s stances which contain common or cane sugar; the first step in process of fermentation being the formation of glucose by taking up elements of water; and, third, the various kinds of grains, potatoes, e other substances containing starch, which by the action of a pecu ferment, diastase, naturally or by the action of dilute mineral ac artificially, is converted into glucose.

Under the general name of ferment or yeast a large number of va

ties and species are included, which resemble each other in form but differ greatly in their properties and characters. The germs of these yeasts are everywhere floating in the air, especially in the hot summer months, and when they encounter a favorable soil for their development they grow and multiply like other plants under similar conditions; for instance, when they attach themselves to the stems and skins of fruit they give rise to the "spontaneous" fermentation of grapes, apples, pears, etc.

In addition to the yeast germs, the air of any locality contains numerous living organisms, the mold, bacteria, and other micro-fungi, for the most part injurious to the making of the wort and forming the true ferments of disease.

Among all these ferments several species will set up alcoholic fermentation in the wort and transform it into alcohol and carbonic acid, but all of them will not give a good product. On the contrary, the great majority of these spontaneous yeasts would have disastrous effects, for the brewer especially, decomposing the beer to such an extent as to render it unsalable.

The species called *Saccharomyces cerevisiæ* constitutes the large class of beer yeast proper, and the one the best known and studied. Two varieties of *Saccharomyces cerevisiæ* are extensively cultivated, the high or upper (Obergährung, fermentation haute) and the inferior or lower (Untergährung, fermentation basse). The former is used with a high, 15° to 18° C. (59° to 65° Fahr.), temperature, the yeast and impurities rising to the top of the vat, whence they are removed by skimming; and the latter at a low temperature, between 4° and 10° C. (39° to 50° Fahr.), where the fermentation takes place slowly and the yeast settles at the bottom in a compact mass. Each variety will produce its own peculiar and characteristic fermentation. A mixture of either of these varieties with one or several other species of *Saccharomyces* as *Sacch. ellipsoidens*, *mycoderma*, etc., results in disaster to the wort.

The wort naturally presents a proper soil for these harmful as well as for the proper or true ferments, and it is not surprising that the germs of the noxious flourish and develop to the detriment of the true yeast plant.

These yeast plants and germs are so minute as to require the use of a microscope with high power objectives to discern and differentiate them. Like all other fungi they are capable of distinct cultivation, and with the exercise of some care, and the assistance of a trained observer, a brewer or distiller, after some experiments, could maintain a crop of such particular yeast plant as yields the best results and gives a uniform product.

This method of "pure" cultivation has been extensively employed in breweries in Denmark, Germany, and elsewhere in Europe, and there is no scientific reason why the same system should not be carried on in this country to the great improvement of our beers.

At the old Carlsberg brewery near Copenhagen, Professor Hansen has cultivated two varieties of bottom *Sacch. cerev.*, which give different results in practice. One gives a beer well adapted for bottling, and is chiefly employed for home use. The other gives a good draught beer, containing more carbonic acid than the former variety; it is not adapted for bottling, but is much preferred by German brewers, and is therefore chiefly cultivated for export.

Experiments upon an industrial scale are being carried on at Burton-on-Trent, in England, with different species of pure yeast. Several varieties of *Sacch. cerev.* have been separated from the yeast generally employed and cultivated, which, when used on a practical scale, give

entirely different results, both as to flavor, brightening, attenuation, and mode of separation of the yeast. Experiments have also shown that these characteristics can be maintained unimpaired throughout a very great many successive fermentations in the brewery. Cultivations have been started from a single yeast cell, and with proper care have been maintained for a long time.

On a commercial scale the cultivation should be conducted in sufficiently large vessels to yield the necessary amount of yeast used for fermentation. For this purpose two vessels should be employed, one in which the wort used for cultivation is sterilized by being boiled, then stirred and aerated, excess of pressure being prevented by means of air filtered through sterilized cotton; into the other (the fermenting vessel, previously sterilized by steam) the sterilized wort is forced, and pure yeast from the laboratory added. When the fermentation is at an end the liquid is run off, the apparatus filled with wort, stirred, and very nearly emptied. The wort so obtained, and containing yeast, is then transferred to the brewing vessels; the residue in the apparatus, with the addition of sterilized wort, serves for the future production of yeast. Pure yeast can thus be continually obtained without fresh inoculation, as the small amount remaining in the fermenting vessel serves this purpose. These vessels are jacketed and provided with the necessary safety-valves, ventilators for admitting filtered air, exit tubes for the escape of steam and carbonic acid, thermometers and manometers for regulating temperature and pressure, and inlets and outlets for wort, beer, and yeast.

DISTILLATION.

The object of the distiller is to separate the alcohol contained in the fermented wort from the foreign matter with which it is associated. For this purpose he has resort to a still. The alcohol thus produced is not, as has been well known for some time, a single substance, homogeneous, always the same in its nature, form, and effects; on the contrary, it is an extremely variable body, of diverse chemical composition and physical characteristics; it is not *one* alcohol but many, which chemists have divided into several series.

The distiller commonly divides the product of his still into three classes: (1) Products with a bad taste, the heads; (2) alcohol, properly speaking; and (3) products with a bad taste, the tails. The first and third are kept separate from the middle, which is the most valuable portion. The following table, according to Dr. Rabuteau, gives the boiling points of these different products:

Products of distillation.	Boils at—	
	Degrees Centigrade.	Degrees Fahrenheit.
Products with a bad taste, the heads:		
Aldehyde	20.8	69.4
Acetic ether	72.7	162.9
Alcohol, grain spirits, ethyl alcohol	78.0	172.4
Products with a bad taste, the tails:		
Propyl alcohol	97.0	206.6
Butyl alcohol	109.0	228.2
Amyl alcohol	132.0	269.6
Valerianic ether	133.0	271.4
Amyl acetate and other nameless products	136.0	276.8

It is fortunate that the products of the first class have such low boiling points that they can be got rid of very easily by fractional distillation, for they are dangerous poisons.

Aldehyde is a colorless, easily mobile liquid, having a specific gravity of 0.8009 at 0° C. (Kopp). Its vapor density was found by Liebig to be 1.532, who also states that when inhaled in large quantities the vapors, of a peculiar ethereal suffocating odor, produce a cramp, which for a few seconds takes away the power of respiration. (Isidore Pierre compares its action to that of sulphurous acid.) It is miscible with water in all proportions, heat being evolved, and it is likewise soluble in both alcohol and ether. The addition of water raises the boiling point of aldehyde. It absorbs oxygen and is slowly converted into acetic acid. (Roscoe and Schorlemmer's Chemistry).

Ethyl acetate or acetic ether is a mobile liquid possessing a penetrating, refreshing smell and a pleasant burning taste. It has a specific gravity of 0.91046 at 0° C. (Kopp). Its vapor density was found by Boullay and Dumas to be 3.016. It mixes with alcohol, ether, acetic acid, etc., in all proportions, and dissolves a large number of resins, oils, and other organic bodies. Its action in many cases, when used as medicine, resembles that of common ether, but it possesses a more agreeable taste and smell. It is also used for addition to the poorer classes of wine, liqueurs, etc. (Roscoe and Schorlemmer's Chemistry). According to Prof. Dujardin-Beaumetz the toxic dose of aldehyde is from 1 to 1.25 grams, and that of acetic ether 4 grams per kilogram of the weight of the animal.

The properties of ethyl, spirits of wine, and methyl alcohols have already been described (Report Commissioner Internal Revenue, 1888, p. CXIV).

The tails or faints, as well as the still less volatile or ordinary fusel oil, are mixtures of several alcohols and fatty acid ethers, their relative quantities depending on the nature of the materials used in mashing, belonging to the higher series of alcohols, and consequently possessing greater toxic effects.

Propyl alcohol was discovered by Chancel in 1853 in small quantities in fusel oil obtained in the manufacture of wine-brandy. It resembles ethyl alcohol in its odor. It has a specific gravity of 0.8198 at 0° C., and boils, according to various observers, from 96° to 98° C. The latter number is probably the correct one, as the boiling points of the normal alcohols increase 19.6° C. for every increment in composition of CH_2 (Grimshaw and Schorlemmer). It is miscible in all proportions with water, but, on the addition of easily-soluble salts, as calcium chloride, etc., it separates out from aqueous solutions. Propyl alcohol is not used in the arts or manufactures, but is chiefly employed in scientific research (Roscoe and Schorlemmer's Chemistry). It is, toxically, more active than ethyl alcohol, the dose is from 3 to 4 grams per kilogram of the weight of the animal.

Butyl alcohol occurs in varying quantities in several fusel oils, and is especially found in the spirits from beet-root, potatoes, and grain. It was discovered by Wurtz in 1852. It is a somewhat mobile liquid, possessing a spirituous smell, but at the same time a fusel-oil odor, resembling that of syringa flowers. It boils at 108° to 109° C., and has a specific gravity of 0.817 at 0° C. At ordinary temperatures it dissolves in ten parts of water, and the greater part is separated from solution on the addition of easily-soluble salts, chloride of calcium, common salt, etc. According to Rabuteau it is toxically four times as active as ethyl alcohol, its dose being 2 grams per kilogram of the weight of the

animal. It has a toxic action on the heart and blood, producing muscular trembling and in large doses convulsive spasms.

Amyl alcohol was so called by Cahours because it was chiefly found in spirits obtained from bodies containing starch (amylum). It is commonly called potato spirits. It has been found since to occur in all fusel oils. Amyl alcohol was for a long time considered to be one distinct compound. Biot first drew attention to the fact that this body possesses the power of rotating the plane of polarized light to the left, and Pasteur, in 1855, pointed out that the rotary powers of different samples of amyl alcohol vary according to the source from which they are obtained. From this he concluded that the body termed amyl alcohol is a mixture in varying proportions of an optically active and an optically inactive compound. He succeeded in obtaining the two modifications of the alcohol, and experiments of later investigators have established that they do not possess an identical chemical constitution. Fermentation amyl alcohol is a colorless, highly refracting liquid, possessing a burning taste and a penetrating smell, boiling at 131°–132° C., and solidifying at —21° C. Inhalation of its vapors produces difficulty of breathing, coughing, headache, and giddiness. (Roscoe and Schorlemmer's Chemistry). It kills rapidly, according to Dujardin-Beaumetz, in doses of from 1.59 to 1.75 grams per kilogram of the weight of the animal. Even in small doses it exerts a powerful effect, bringing about intoxication and coma, producing at first a violent excitement of the nerve centers, followed by depression of the sensitive and motive forces.

Valerianic ether is a colorless liquid, having an irritating taste, and an odor which has been compared to that of apples; is met with in an extremely small proportion in fusel oils. The same is true in regard to amyl acetate, a colorless liquid of a peculiar and irritating taste, of an odor that recalls that of pears. Both of these substances have been little studied by chemists.

In short, very complex in their compositions, which are still very imperfectly known, the "spirits" of commerce not only contain the ethyl, propyl, butyl, and amyl series of alcohol compounds, on which most research has been concentrated, but also a certain number of other products, as pyridin and several aldehydes of unknown composition.

Drs. Laborde and Magnan submitted a report to the French Academy of Medicine, October 21, 1888, giving the results of their experiments with the higher alcohols and artificial bouquets, in regard to their toxic effects on animals, comparing the effects of the natural products with those of the artificial products. (Rev. Ques. 4 s., T. 2, 1888, pp. 1369, 1423.)

All spirits consist of a more or less diluted ethyl alcohol containing traces of the higher-boiling compounds, commonly called fusel oil, the proportion depending on the care exercised by the distiller in stopping the distillation when the vapor temperature rises above the boiling point of ethyl alcohol, and certain flavoring bodies depending on the material employed. The deleterious effects of raw spirits are attributable to the presence of these higher-boiling alcohols, which by slow oxidation, by exposure to the air, are more or less changed and converted into certain ethers which are comparatively harmless.

Few accurate experiments have been made on the actual proportions of amyl alcohol present in whiskies. According to Dupré, a sample of Scotch whisky contains 0.19; of "Cape Smoke," 0.24, and of "Common Samshoe," of 0.18 of amyl alcohol per 100 parts of ethyl alcohol.

A large proportion of the cheapest whiskies found in our markets is

by rectifiers by diluting "pure neutral" or "cologne" spirits to strength with water, adding some burnt sugar, caramel, or prune o color it, and certain artificial essences with a little tannin to he desired flavors. Innumerable recipes are known to the trade mpounding from a barrel of cologne spirits, brandy, whisky, rye or bourbon, and gin as may be required. A slightly higher of cheap whisky is made by adding one part of a highly ed whisky to three parts of cologne spirits, diluted to proof th.

r spirits are colorless, or nearly so, and if stored in glass or earth- e vessels would so remain, but if kept in oaken barrels they ally acquire a lighter or darker topaz color. If the staves of the are heavily charred the spirits rapidly acquire a blackish topaz and if stored in a warm room or if the contents of the barrel are to nearly the boiling point by the introduction of a steam coil o-called aging process), the color becomes very dark in less than e hours.

ascertain the amount of extractive matter that would be obtained well-seasoned oak by prolonged treatment with alcohol of different ths the following experiments were undertaken:

EXPERIMENTS WITH COLOGNE ALCOHOL OF 93 PER CENT.

rge flask of about 2½ liters capacity was filled with 140 grams l-seasoned oak in the form of very fine shavings, tightly packed, ver them were poured 2 liters of redistilled cologne spirits. The nd contents were then placed on the steam bath, a thermometer in- in the middle of the shavings to note the temperature, and heated r till the alcohol was at 70° C. At the end of each twenty-four a portion was taken out and filtered, to get rid of fine particles of and 50 cubic centimeters of the filtrate taken and evaporated to ss, with the following results:

esidue:	Per cent.
er twenty-four hours	*0.135
er forty-eight hours	0.132
er seventy-two hours	0.129
er ninety-six hours	0.126
er one hundred and twenty hours	0.126
er one hundred and forty-four hours	0.125
er one hundred and sixty-eight hours	†0.125

the extractive matter was evidently obtained in the first twenty- ours, as the other results, which are slightly lower than the first, accounted for by the fact that 200 cubic centimeters of the alcoholic on were taken out at the end of the twenty-four, forty-eight, ty-two, and ninety-six hours and a like quantity of redistilled e spirits added to make up the volume of the solution. All these ibic centimeter solutions have a similar topaz color. At the end week the solution was filtered and evaporated, to drive off the l, the volume being from time to time kept up with the addition ter. When all the alcohol was driven off, the solution was con- ted till it measured about ½ liter, when it was allowed to cool, erred to a half-liter flask, filled to the mark, and the reducing s determined, as in the whiskies, with 4 cubic centimeters of Fehl- solution.

* Equal to 78.729 grains per United States gallon.
† Equal to 72.898 grains per United States gallon.

EXPERIMENTS WITH PROOF SPIRITS.

These experiments were conducted at the same time as those wit cologne spirits. The shavings, however, were in somewhat thinner slice 100 grams filling the flask, and were treated with 2 liters of redistille cologne spirits diluted with water to a specific gravity of 0.934 or proc strength.

After one hour on the steam bath the temperature had risen to 25 C., and the solution had a quite dark topaz color, and the total residu amounted to 0.156 per cent., equal to 90.976 grains per United State gallon.

Total residue:	Per cent
After twenty-four hours	0.24
After forty-eight hours	0.24
After seventy-two hours	0.24
After ninety-six hours	0.24
After one hundred and twenty hours	0 24
After one hundred and forty-four hours	0.21
After one hundred and sixty-eight hours	*0.24

The color of the solution was of a dark red topaz color, resemblin somewhat that of an old bourbon whisky, at the end of the first twent four hours, and did not get any darker at the end of the week's trea ment.

It may fairly be concluded from the above experiments that wh spirits are heated to 70° C. (158° Fahr.) for one or two hours they w extract the maximum amount of tannin and other extractive matte from the exposed surface of the barrel in which they are contained.

The suggestion having been made that the tannin derived from t barrel by the aging process would reduce Fehling's solution and th apparently show the presence of reducing sugars, led me to underta the following experiment:

Five grams of chemically pure tannic acid were dissolved in 250 cu centimeters of water, equal to a content of 291.590 grains to the Unit States gallon, and treated in the usual manner with Fehling's solutio The solution was run in from a graduated burrette slowly and boil after each addition, but the whole amount of tannic acid solution w used up without causing the slightest reduction of the Fehling solutio care being taken to keep the boiling solution alkaline.

From the analyses of the bourbon and rye whiskies received dir from the distillers and representing as they do average samples of o two, three, and four year old goods, it may be concluded that whisky produced from corn or rye and stored in oaken barrels fr one to four years should contain more than 0.145 per cent. of total s ids, 84.560 grains per United States gallon of 231 cubic inches, or mo than 5 grains of reducing sugars. These figures, however, may modified somewhat when a larger number of genuine samples ha been analyzed, but as these analyses were of samples representing large number of gallons, it is not presumed that the limits here give will be exceeded.

Among the samples designated under the head of "abnormal," in the following table, number 208 is remarkable. Samples from thre barrels of whisky from the same distillery and produced the same da were submitted for analysis. Numbers 207 and 209 gave 0.049 and 0.052 per cent. of total solids, whilst No. 208 gave 1.491 per cent., o

* Equal to 139.963 grains per United States gallon.

which nearly 45 per cent. was reducing sugars. The color of No. 208 was very dark and it had a very sweet taste; evidently a large amount of caramel had been added.

ANALYSES OF WHISKY.

Serial No.	Where produced.	Age when received.	Per cent. total solids.	Grains per 1 United States gallon of 231 cubic inches.		Remarks.
				Total solids.	Reducing sugars.	
	Four years old.	yrs. m. d.				
216	Lexington, Ky	4 0 0	0.112	65.083	2.683	Bourbon.
212	Highspire, Pa	4 2 15	0.137	79.896	3.645	Rye.
	Three years old.					
217	Lexington, Ky	3 0 0	0.114	66.483	2.916	Bourbon. Sample from fifteen packages.
	Two years old.					
218	Lexington, Ky	2 0 0	0.091	53.069	3.207	Bourbon. Sample from fifteen packages.
213	Mercersburgh, Pa	2 5 0	0.105	61.001	0.875	Rye.
215	Penn, Pa	2 9 0	0.108	62.984	2.099	Rye.
	One year old.					
227	Frankfort, Ky	1 0 0	0.072	41.989	2.916	Bourbon. Sample from six packages.
194	Wide Awake, Ky	1 1 3	0.060	34.991	4.199	
214	Mercersburgh, Pa	1 5 0	0.114	66.483	2.683	Rye.
184	Finchtown, Ky	1 5 18	0.040	23.327	2.916	
	Less than six months old.					
175	Finchtown, Ky	8	0.044	25.660	4.374	
205	------do	26	0.049	28.576	(*)	
198	------do	29	0.038	22.160	3.849	
199	------do	29	0.040	23.327	3.732	
225	------do	34	0.020	11.664	(*).	
200	------do	35	0.044	25.660	(*)	
204	------do	56	0.040	23.327	(*)	
207	------do	58	0.049	28.809	(*)	
209	------do	58	0.052	30.325	(*)	
203	------do	68	0.022	12.333	(*)	
220	------do	76	0.077	45.138	2.216	
191	------do	94	0.046	26.826	4.490	
226	------do	111	0.041	23.910	(*)	
222	Finchtown, Ky	114	0.046	26.826	4.665	
223	------do	114	0.047	27.409	3.907	
221	Chicago, Ill	116	0.059	34.174	2.396	
228	Finchtown, Ky	157	0.082	47.821	(*)	
224	------	------	0.072	41.989	2.216	
	Abnormal whisky.					
183	Finchtown, Ky	20	0.057	33.241	26.826	
201	------do	37	0.413	240.863	16.679	
196	Petersburgh, Ky	38	0.122	71.147	9.331	
197	------do	40	0.063	36.740	5.832	
208	Finchtown, Ky	58	1.491	869.521	388.748	Produced at same distillery as Nos. 207 and 209 on same day.
202	------do	------	0.580	338.244	155.476	
181	Freeport, Pa	2 8 19	0.178	103.805	(*)	
210	------do	3 0 0	0.178	103.805	2.683	

*Not enough for a determination.

DIVISION OF ASSESSMENTS.

The following statements relative to assessments; to spirits deposit in and withdrawn from distillery warehouses and special bonded wa houses, the number and location of such warehouses and the names the proprietors thereof; to the stock of spirits in the United Sta October 1, 1889; to exportation of spirits, tobacco, snuff, cigars, a cigarettes in bond; to exportations of tobacco, cigars, fermented liquo and stills, with benefit of drawback; and to the production, consun tion, and exportation of oleomargarine and other particulars concerni the operation of the "oleomargarine law;" and the act of October 1888, entitled "An act to prevent the manufacture or sale of adulterat food or drugs in the District of Columbia," are prepared from repo in the division of assessments. The statements relative to assessmei are to be found on this page and the page following; statements re tive to operations in distillery warehouses commence on page 71 (s also special index on page 70); to operations in special bonded wa houses on page 156; to exportations in bond free of tax as to spirits page 129; as to tobacco, snuff, cigars, and cigarettes on page 159, and to oleomargarine on page 163; to exportations of tax-paid spirits, tobac cigars, cigarettes, fermented liquors, and stills, with benefit of dra back of the tax, page 160; to oleomargarine, page 161; and to ad teration of food and drugs, page 175.

MISCELLANEOUS ASSESSMENTS.

The following table shows the assessments made by the Commissio of Internal Revenue during the fiscal years ended June 30, 1888, a June 30, 1889, respectively, and the increase or decrease on each arti or occupation.

	Assessed during fiscal years ended—		Fiscal year ended J 30, 1889.	
	June 30, 1888.	June 30, 1889.	Increase over 1888.	Decr from 1
Tax on deficiencies of production of distilled spirits	$24,498.09	$26,369.78	$1,871.69	.....
Tax on excess of material used in the production of distilled spirits	1,087.19	2,363.14	1,275.95	.....
Tax on circulation of banks and others	12,370.10	13,649.26	1,279.16	.....
Tax on distilled spirits fraudulently removed or seized, also taxes overdue	3,976,143.15	6,720,370.65	2,744,227.50	.....
Taxes on fermented liquors removed from brewery unstamped	12,950.43	1,882.56	.....	$11,06
Tax on tobacco, snuff, and cigars removed from factory unstamped	6,683.34	9,062.44	2,379.10	.....
Tax on oleomargarine sold without payment of tax	222.00	6.00	.....	21
Tax on income and dividends	.....	.....	.....	.....
Tax on legacies and successions	15.25	.....	.....	1
Assessed penalties	85,148.14	77,495.67	.....	7,65
Unassessed and unassessable penalties, interest, deficiencies in bonded accounts which have been collected, taxes previously abated, conscience money, also fines, penalties, and forfeitures, and costs paid to collectors by order of court or by order of Secretary, and unassessable taxes recovered; also amount of penalties and interest received for validating unstamped instruments (Form 58)	161,889.93	89,912.21	.....	71,96
Special taxes (licenses)	45,126.16	56,090.84	10,964.68	.....
	4,326,133.78	6,997,202.55	2,671,068.77	.....

ASSESSMENTS FOR 1889.

The following statement shows the amount of assessments in each of the several States and Territories of the United States during the fiscal year ended June 30, 1889:

States and Territories.	Amount.	States and Territories.	Amount.
Alabama	$2,498.94	Montana, Idaho, and Utah	$1,261.61
Arkansas	4,270.84	Nebraska and Dakota	2,296.43
California and Nevada	65,862.69	New Hampshire, Maine, and Vermont	17,308.59
Colorado and Wyoming	1,737.90	New Jersey	14,224.94
Connecticut and Rhode Island	8,805.28	New Mexico and Arizona	1,850.07
Florida	614.76	New York	79,916.65
Georgia	8,147.77	North Carolina	71,691.07
Illinois	44,814.45	Ohio	125,494.10
Indiana	65,914.52	Oregon, Washington, and Alaska	1,573.44
Iowa	9,006.62	Pennsylvania	563,674.63
Kansas and Indian Territory	1,902.97	South Carolina	2,060.08
Kentucky	5,035,144.30	Tennessee	67,585.75
Louisiana and Mississippi	10,741.54	Texas	2,724.48
Maryland, Delaware, and District of Columbia	609,009.08	Virginia	18,785.91
Massachusetts	8,834.29	West Virginia	122,350.08
Michigan	11,751.56	Wisconsin	8,996.43
Minnesota	2,029.54		
Missouri	9,232.16	Total	6,997,202.55

The increase in assessments in the fiscal year 1889 over assessment made in 1888 is almost entirely due to the large assessments of the overdue taxes on distilled spirits. The increase of such assessments made in 1888 over those made in 1887 amounted to $642,847.25, and the further increase during the present year is, as appears from the above table, $2,744,227.50. There is a further increase of assessments against distillers as follows: On deficiencies in production, that is to say, in cases where the distiller has failed to produce 80 per cent. of his producing capacity as fixed by law, $1,871.69; also on an excess of materials used beyond such capacity, $1,275.95.

The tax assessed on the circulation of banks, $13,649.26, as against $2,370.10, is entirely the tax of 10 per cent. on the circulation of Canadian bank notes.

The decrease of $7,652.47 as to assessed penalties, and the increase $10,964.68 as to special taxes, indicate that special-tax payers have been more prompt in rendering their returns of taxes due, but less prompt in paying them.

The decrease of $71,977.72 in the amount reported on Form 58 is a satisfying circumstance, as it indicates a decrease in the amounts settled by compromise.

Taxes on deficiencies in the production of distilled spirits, and on excess of materials used by distillers abated before assessment during the year, are as follows:

Forty-four claims received from grain distillers, amount of tax abated—	
On excess of materials used	$2,515.30
On deficiencies in production of distilled spirits	81,553.04
Total	84,068.34
Thirty-three claims received from fruit distillers, amount of tax abated—	
On deficiencies in production of distilled spirits	5,950.64
Total, grain and fruit	90,018.98

DETAILS OF OPERATIONS IN DISTILLERY WAREHOUSES.

The following tables furnish detailed statements in taxable gallons as to operations at distillery warehouses during the year and the months of July, August, and September, 1889; also as to spirits in the hands of wholesale liquor dealers and rectifiers, etc., viz:

I.—Spirits in warehouses July 1, 1888:
1. By districts and months of production, pages 71 to 75, inclusive.
2. By districts and kinds known to the trade, pages 76 and 77.

NOTE.—For statement of spirits in warehouses at commencement of previous fiscal years, see page 150.

II.—Spirits produced:
1. By kinds known to the trade during fiscal year 1888, page 79.
2. By districts and kinds during fiscal year 1889, pages 78 and 79.
3. In aggregate during years 1885, 1886, 1887, 1888, and 1889, page 150.
4. By kinds in aggregate during past twelve years, page 80.

III.—Spirits withdrawn from warehouses:
1. Tax-paid by different kinds fiscal year 1888, page 123.
2. Tax-paid by districts and kinds during fiscal year 1889, pages 122 and 123.
3. Tax-paid by kinds 1888 and 1889 compared, page 124.
4. Tax-paid in aggregate, 1885, 1886, 1887, 1888, and 1889, page 150.
5. For export by districts and kinds during fiscal year 1888, page 129.
6. For export by districts and kinds during fiscal year 1889, page 130.
7. For export by domestic and foreign ports and kinds in 1888, pages 131 and 132.
8. For export by domestic and foreign ports and kinds in 1889, pages 133 to 135.
9. For export in aggregate by years during the past seventeen years, page 135.
10. For scientific purposes and use of the United States by kinds in 1888 and by districts and kinds in 1889, page 136.
11. For manufacturing warehouses by districts and kinds, year 1889, and in aggregate for 1888, page 137.
12. Lost by leakage in 1880, 1881, 1882, 1883, 1884, 1885, 1886, 1887, and 1888, also by districts and kinds in 1889, pages 126 to 129.
13. Lost by casualty, etc., in 1888, also by districts and kinds in 1889, also by calendar years 1872 to 1888, inclusive, pages 139 and 140.
14. Losses and withdrawals not tax-paid or for export, 1885, 1886, 1887, 1888, and 1889, page 150.

IV.—Spirits in warehouse June 30, 1889:
1. By districts and months of production, pages 143 to 147, inclusive.
2. By districts and kinds known to the trade, pages 141 and 142.
3. As compared with quantity in warehouses June 30, 1888, page 142.

V.—Summary of operations at distillery warehouses for the fiscal year 1889, page 149. See also page 148.

NOTE.—For statement as to balances in warehouses at close of each of past twenty-one fiscal years, see page 150.

VI.—Operations at distillery warehouses during July, August, and September of 1888 and 1889:
1. Spirits produced in July, August, and September, 1888, by months, page 154.
2. Spirits produced same months in 1889, by months and States, page 154.
3. Spirits withdrawn tax-paid in July, August, and September, 1888, by months, page 154.
4. Spirits withdrawn tax-paid same months in 1889, by months and States, page 154.
5. Spirits withdrawn for export in July, August, and September, 1889, page 155.
6. Spirits withdrawn for export in July, August, September, and October, 1882, and in July, August, and September, 1883, 1884, 1885, 1886, 1887, 1888, and 1889, page 156.
7. Spirits in warehouse October 1, 1884, 1885, 1886, 1887, 1888, and 1889, page 155.

VII.—Spirits in hands of wholesale liquor dealers and rectifiers:
1. Quantity in aggregate, by districts, held October, 1, 1888, page 152.
2. Quantity by districts and kinds, held October 1, 1889, pages 152 and 153.

VIII.—Quantity of spirits in the United States October 1, 1889, page 159.

PRODUCTS, BY MONTHS, OF SPIRITS IN WAREHOUSE JUNE 30, 1888.

STATEMENT, BY MONTHS OF PRODUCTION, OF SPIRITS IN WAREHOUSE IN EACH DISTRICT OF THE UNITED STATES, JUNE 30, 1888.

[Quantities in taxable gallons.]

Month and year.	District of Arkansas.	First district of California.	District of Connecticut.	District of Georgia.	First district of Illinois.	Fifth district of Illinois.	Eighth district of Illinois.	Thirteenth district of Illinois.	Sixth district of Indiana.
Prior to June, 1885	.....	.....	.....	.....	.....	2,400	.....	.....	8,221
June, 1885	.....	.....	.....	45	.....	1,901	.....	.....	29,203
July, 1885	.....	.....	.....	46	.....	1,459	.....	.....	2,743
August, 1885	.....	.....	.....	.....	.....	1,983	.....	.....	.....
September, 1885	.....	.....	.....	45	.....	4,341	.....	.....	803
October, 1885	.....	.....	.....	90	3,966	16,954	.....	.....	179
November, 1885	.....	.....	.....	.....	4,202	1,442	.....	.....	2,683
December, 1885	45	.....	.....	227	3,160	.....	.....	.....	16,075
January, 1886	266	.....	23	.....	4,759	44	.....	.....	10,258
February, 1886	541	.....	.....	.....	2,839	918	.....	.....	20,203
March, 1886	586	.....	.....	.....	7,571	1,506	.....	.....	36,407
April, 1886	762	.....	.....	176	4,193	43	.....	.....	40,029
May, 1886	45	.....	.....	46	1,650	44,328	.....	.....	74,191
June, 1886	42	.....	.....	185	2,754	935	.....	.....	13,596
July, 1886	.....	.....	46	185	749	.....	.....	.....	23,325
August, 1886	.....	.....	.....	46	451	46,893	.....	.....	428
September, 1886	.....	.....	.....	411	2,093	.....	.....	.....	241
October, 1886	.....	.....	.....	141	2,701	1,140	.....	.....	5,154
November, 1886	91	.....	.....	46	4,254	86	.....	.....	1,859
December, 1886	501	.....	.....	92	22,624	1,346	.....	.....	10,655
January, 1887	359	.....	.....	137	17,541	1,842	.....	.....	24,345
February, 1887	569	.....	.....	270	36,351	7,460	.....	.....	29,913
March, 1887	.....	.....	701	140	27,477	17,614	293	.....	66,787
April, 1887	487	.....	325	554	16,636	22,809	2,218	.....	43,215
May, 1887	953	827	.....	523	48,919	27,299	2,901	.....	63,462
June, 1887	1,776	.....	85	127	104,008	100,583	.....	.....	90,490
July, 1887	134	.....	.....	616	148,484	90,067	.....	.....	8,590
August, 1887	.....	.....	.....	137	15,243	51,674	.....	.....	23,174
September, 1887	.....	.....	.....	415	25,589	21,246	616	.....	24,426
October, 1887	368	.....	136	91	58,942	52,860	.....	.....	77,374
November, 1887	795	.....	.....	.....	83,756	52,890	.....	.....	29,037
December, 1887	1,360	.....	.....	104	34,090	46,263	3,149	.....	50,221
January, 1888	3,157	.....	138	1,826	70,734	43,348	3,954	.....	100,219
February, 1888	3,676	.....	1,202	5,513	6,569	52,447	3,330	.....	143,027
March, 1888	4,319	.....	1,953	6,996	11,307	65,125	4,347	.....	190,290
April, 1888	4,892	.....	4,070	8,266	34,974	248,381	3,082	.....	108,055
May, 1888	4,812	4,483	2,804	9,875	36,407	584,152	.....	2,003	110,881
June, 1888	2,633	5,730	4,874	13,953	18,127	511,363	28,650	.....	60,597
Total	33,199	11,040	16,357	51,324	863,119	2,125,142	52,540	2,003	1,540,416

NOTE.—The quantities of spirits given on this page and on subsequent pages of this report as remaining in distillery warehouses or in special bonded warehouses are the quantities as shown by the original gauge.

PRODUCTS, BY MONTHS, OF SPIRITS IN WAREHOUSE JUNE 30, 1888—Cont'd.

STATEMENT, BY MONTHS OF PRODUCTION, OF SPIRITS, ETC.—Continued.

[Quantities in taxable gallons.]

Month and year.	Seventh district of Indiana.	Fourth district of Iowa.	Second district of Kentucky.	Fifth district of Kentucky.	Sixth district of Kentucky.	Seventh district of Kentucky.	Eighth district of Kentucky.	District of Maryland.	Third district of Massachusetts.
Prior to June, 1885	.....	.....	205,435	806,587	75,995	295,890	179,068	155,472	.....
June, 1885	.....	.....	45,498	260,386	52,381	116,440	79,781	89,712	2,445
July, 1885	.....	.....	30	9,415	4,412	9,796	17,369	46,367	1,574
August, 1885	.....	.....	.....	5,694	447	.....	19,000	19,497	883
September, 1885	.....	.....	.....	4,149	.....	.....	4,533	35,811	2,471
October, 1885	.....	.....	.....	8,476	2,756	.....	8,435	102,944	2,681
November, 1885	.....	.....	26,309	141,989	18,712	6,878	66,379	109,947	6,559
December, 1885	.....	.....	100,990	567,593	57,946	236,235	87,217	162,086	1,538
January, 1886	.....	.....	148,895	905,266	97,953	412,806	184,824	151,504	2,738
February, 1886	458	.....	173,482	1,071,531	116,603	428,736	259,588	178,653	5,457
March, 1886	.....	.....	258,318	1,453,448	229,731	546,132	376,116	248,170	10,864
April, 1886	.....	.....	249,047	1,453,792	271,353	546,860	361,846	243,206	6,603
May, 1886	2,281	.....	271,545	1,404,173	257,216	427,297	303,129	249,270	2,692
June, 1886	66	.....	76,888	330,268	136,883	111,810	133,471	173,914	9,221
July, 1886	.....	.....	495	26,084	43,458	5,126	838	38,261	1,821
August, 1886	624	.....	.....	10,097	13,204	.....	419	1,849	5,774
September, 1886	542	.....	.....	20,945	1,097	27,188	463	60,790	7,366
October, 1886	224	.....	6,945	64,959	16,116	49,158	1,295	106,066	6,916
November, 1886	.....	.....	30,406	307,105	54,250	54,056	45,231	116,712	5,884
December, 1886	.....	.....	172,159	923,999	132,633	74,437	85,086	120,210	9,025
January, 1887	.....	509	200,885	1,212,032	159,649	83,725	112,477	75,713	19,411
February, 1887	.....	537	213,639	1,283,235	198,810	197,965	116,079	87,643	19,806
March, 1887	.....	637	260,641	1,563,839	269,519	348,086	205,431	119,779	6,067
April, 1887	534	335	250,906	1,489,267	271,298	608,583	238,840	135,896	14,592
May, 1887	22	.....	107,570	881,894	247,086	437,788	116,426	159,617	7,217
June, 1887	221	.....	7,812	216,101	74,416	61,576	5,809	98,454	5,749
July, 1887	237	.....	305	28,098	39,578	5,740	534	20,961	10,359
August, 1887	87	.....	144	48	15,629	2,725	72	4,576	7,701
September, 1887	122	.....	295	.....	42,174	6,913	.....	31,599	18,334
October, 1887	23	.....	671	13,744	92,228	29,155	463	49,192	18,143
November, 1887	.....	.....	1,409	57,109	73,095	69,931	680	76,957	31,159
December, 1887	7,248	.....	1,518	216,679	115,709	95,765	885	62,937	35,446
January, 1888	17,693	.....	19,974	297,665	115,505	190,461	2,934	126,516	39,417
February, 1888	22,035	.....	43,932	398,759	196,917	239,062	8,191	132,504	61,650
March, 1888	124,920	.....	73,700	472,286	241,032	251,841	17,633	159,258	73,731
April, 1888	66,755	.....	71,445	428,664	214,748	205,673	20,080	139,455	65,318
May, 1888	38,473	.....	54,841	303,454	264,246	162,862	18,181	161,238	69,711
June, 1888	81,625	.....	8,735	107,965	182,813	60,916	2,731	96,144	82,969
Total	364,210	2,018	3,084,870	18,746,814	4,431,598	6,407,612	3,081,534	4,148,912	679,294

PRODUCTS, BY MONTHS, OF SPIRITS IN WAREHOUSE JUNE 30, 1888—Cont'd.

STATEMENT, BY MONTHS OF PRODUCTION, OF SPIRITS, ETC.—Continued.

[Quantities in taxable gallons.]

Month and year.	First district of Missouri.	Sixth district of Missouri.	District of Nebraska.	District of New Hampshire.	Fifth district of New Jersey.	First district of New York.	Twenty-eighth district of New York.	Fourth district of North Carolina.	Fifth district of North Carolina.
Prior to June, 1885	.....	.....	.....	.....	.....	.....	8,793	368	174
June, 1885	.....	.....	.....	.....	.....	.....	4,692	22	.....
July, 1885	.....	.....	.....	.....	.....	.....	3,666	.....	.....
August, 1885	.....	.....	.....	444	.....	.....	2,340	.....	.....
September, 1885	.....	.....	.....	.....	.....	.....	.....	.....	45
October, 1885	.....	1,451	.....	354	.....	.....	6,826	.....	.....
November, 1885	.....	.....	.....	525	.....	.....	5,060	.....	.....
December, 1885	.....	1,066	230	404	3,604	.....	19,052	.....	137
January, 1886	.....	1,894	.....	398	777	.....	5,246	181	133
February, 1886	.....	2,342	4,443	467	3,361	.....	2,509	358	95
March, 1886	.....	7,220	5,156	721	6,307	8,129	6,575	484	.....
April, 1886	132	4,546	8,614	.....	6,276	795	16,061	382	33
May, 1886	.....	6,246	10,641	.....	1,274	1,016	9,794	387	.....
June, 1886	.....	2,037	.....	.....	.....	.....	6,385	145	187
July, 1886	.....	.....	.....	.....	2,106	2,689	9,163	129	97
August, 1886	.....	.....	.....	.....	7,651	4,448	6,632	.....	184
September, 1886	.....	.....	.....	.....	3,580	4,730	3,481	45	.....
October, 1886	211	1,918	.....	.....	5,813	4,914	6,173	.....	47
November, 1886	98	8,434	3,271	588	8,125	.....	8,756	141	377
December, 1886	2,934	13,814	17,685	1,122	12,509	.....	12,048	256	.....
January, 1887	519	4,296	17,013	391	6,504	.....	.....	427	45
February, 1887	364	9,766	15,964	692	.....	463	3,174	564	48
March, 1887	695	8,122	13,739	3,153	10,143	.....	893	665	158
April, 1887	32,718	6,797	1,452	2,090	2,772	.....	3,838	655	350
May, 1887	12,641	6,038	.....	.....	.....	.....	4,612	684	159
June, 1887	1,890	1,426	308	1,442	1,062	.....	9,008	421	110
July, 1887	484	56	.....	1,806	29,510	3,151	7,809	280	403
August, 1887	176	.....	.....	1,645	12,305	1,714	1,462	188	138
September, 1887	2,219	.....	.....	1,604	3,892	8,851	3,669	110	416
October, 1887	.....	1,236	147	456	11,105	.....	14,785	.....	115
November, 1887	2,209	2,529	98	504	20,124	174	9,604	386	230
December, 1887	12,443	11,063	1,445	1,101	.....	.....	21,630	599	746
January, 1888	2,134	9,348	.....	1,823	19,739	.....	7,409	1,923	7,800
February, 1888	1,671	42,776	.....	2,674	25,835	.....	7,062	2,377	10,982
March, 1888	13,422	74,720	46,178	2,990	20,457	5,704	2,846	6,012	18,257
April, 1888	12,622	56,242	43,036	2,801	18,708	8,211	4,843	7,572	25,072
May, 1888	4,729	57,710	46,577	2,846	23,123	10,708	8,867	9,227	28,205
June, 1888	8,488	62,369	112,343	414	20,239	23,507	30,617	7,658	39,009
Total	112,800	466,062	348,340	33,455	281,991	89,264	285,380	42,631	128,752

PRODUCTS, BY MONTHS, OF SPIRITS IN WAREHOUSE JUNE 30, 1888—Cont'd.

STATEMENT, BY MONTHS OF PRODUCTION, OF SPIRITS, ETC.—Continued.

[Quantities in taxable gallons.]

Month and year.	First district of Ohio.	Tenth district of Ohio.	Eleventh district of Ohio.	Eighteenth district of Ohio.	District of Oregon.	First district of Pennsylvania.	Ninth district of Pennsylvania.	Twelfth district of Pennsylvania.	Twenty-third district of Pennsylvania.
Prior to June, 1885 ..	15, 978	2, 882	.....	.....	.....	9, 781	1, 951	.....	76, 949
June, 1885	11, 019	1, 726	3, 649	.....	.....	9, 992	4, 680	.....	65, 713
July, 1885	5, 147	.....	2, 732	46	.....	13, 982	359	.....	36, 091
August, 1885	.....	.....	4, 815	236	.....	3, 655	289	.....	17, 840
September, 1885	.....	.....	.....	1, 492	.....	7, 761	264	884	36, 757
October, 1885	445	603	.....	2, 943	.....	19, 776	1, 336	971	118, 671
November, 1885	29, 107	553	20	2, 855	.....	18, 323	3, 365	695	168, 623
December, 1885	44, 427	101	.....	1, 924	.....	19, 510	4, 764	.....	169, 179
January, 1886.....	53, 663	2, 805	.....	2, 917	826	17, 412	6, 042	.....	151, 220
February, 1886	87, 140	1, 674	791	.....	1, 937	22, 834	6, 169	.....	162, 755
March, 1886	82, 824	2, 360	8, 710	938	2, 190	31, 093	7, [illegible]	.....	209, 238
April, 1886	69, 355	1, 812	15, 851	2, 321	618	30, 249	10, 082	798	205, 041
May, 1886	111, 261	488	3, 786	2, 190	.....	29, 390	12, 426	143	202, 534
June, 1886	137, 628	1, 169	1, 056	2, 089	.....	28, 135	10, 742	.....	208, 690
July, 1886	28, 691	854	91	2, 060	.....	24, 530	9, 637	902	67, 803
August, 1886	7, 395	.....	11	163	.....	23, 510	2, 170	176	16, 522
September, 1886	38, 954	.....	65	.....	.....	4, 080	1, 706	599	73, 404
October, 1886	67, 164	.....	1, 956	.....	.....	30, 636	3, 832	789	220, 974
November, 1886	66, 632	1, 269	1, 275	.....	.....	29, 292	6, 250	2, 156	263, 636
December, 1886.....	101, 170	1, 817	4, 106	1, 208	.....	30, 620	11, 912	1, 330	283, 248
January, 1887.....	126, 705	1, 880	2, 251	1, 684	1, 519	30, 120	16, 784	1, 755	288, 822
February, 1887	95, 216	4, 339	5, 361	1, 606	1, 878	28, 539	20, 634	1, 296	276, 304
March, 1887	124, 420	6, 658	5, 091	1, 947	2, 269	31, 478	28, 963	1, 565	314, 519
April, 1887.....	151, 458	6, 753	5, 959	2, 891	802	29, 605	21, 672	3, 576	314, 961
May, 1887	161, 912	1, 776	10, 685	2, 445	.....	29, 125	18, 365	3, 462	317, 012
June, 1887	107, 094	1, 800	.....	2, 066	.....	28, 560	19, 522	1, 121	267, 322
July, 1887	73, 457	432	710	2, 023	.....	29, 680	16, 475	311	126, 957
August, 1887	30, 037	.....	2, 363	687	.....	6, 602	5, 643	317	63, 557
September, 1887	52, 974	.....	222	45	.....	27, 705	6, 537	186	64, 707
October, 1887	38, 949	.....	4, 160	476	.....	30, 219	9, 365	2, 688	148, 254
November, 1887.....	102, 079	1, 113	1, 023	504	.....	30, 914	12, 897	2, 573	207, 605
December, 1887	159, 073	5, 047	.....	967	.....	32, 364	19, 133	2, 561	265, 674
January, 1888	177, 485	6, 931	1, 752	1, 494	.....	31, 113	21, 426	2, 265	248, 435
February, 1888	148, 118	6, 708	2, 106	3, 069	.....	32, 314	24, 068	3, 049	250, 494
March, 1888	153, 066	7, 485	3, 624	5, 641	.....	38, 508	26, 046	6, 120	298, 197
April, 1888	134, 397	1, 712	12, 117	5, 139	.....	31, 997	23, 864	7, 524	306, 156
May, 1888.....	141, 402	1, 793	11, 941	4, 430	.....	39, 443	26, 935	6, 833	333, 579
June, 1888.....	136, 039	267	11, 865	4, 061	.....	17, 754	22, 787	4, 413	240, 890
Total.....	3, 071, 781	74, 807	130, 144	63, 657	12, 039	990, 601	448, 937	61, 058	7, 087, 443

PRODUCTS, BY MONTHS, OF SPIRITS IN WAREHOUSE JUNE 30, 1888—Cont'd.

STATEMENT, BY MONTHS OF PRODUCTION, OF SPIRITS, ETC.—Continued.

[Quantities in taxable gallons.]

Month and year.	District of South Carolina.	Second district of Tennessee.	Fifth district of Tennessee.	Fourth district of Texas.	Sixth district of Virginia.	District of West Virginia.	First district of Wisconsin.	Total in warehouse June 30, 1888.
Prior to June, 1885	.....	.....	11,169	.....	856	35,086	1,366	1,893,522
June, 1885	.....	11	2,298	.....	1,462	.....	.....	783,052
July, 1885	.....	.....	7,101	.....	46	.....	.....	162,381
August, 1885	.....	.....	3,249	.....	.....	.....	.....	80,372
September, 1885	.....	.....	3,224	.....	261	14,737	.....	117,608
October, 1885	.....	.....	12,034	.....	2,385	25,657	353	340,286
November, 1885	.....	.....	3,414	.....	6,069	24,709	.....	648,418
December, 1885	.....	.....	5,152	.....	656	18,226	.....	1,520,750
January, 1886	.....	.....	9,807	.....	1,000	37,490	2,936	2,214,053
February, 1886	45	27	4,556	313	1,347	34,266	.....	2,626,438
March, 1886	58	.....	7,757	2,677	2,633	56,686	725	3,619,169
April, 1886	14	.....	4,312	.....	2,665	53,581	1,965	3,613,412
May, 1886	333	.....	32,565	.....	1,883	56,119	1,621	3,591,959
June, 1886	102	.....	10,143	.....	1,862	27,239	.....	1,427,671
July, 1886	19	.....	1,818	.....	380	.....	1,121	292,478
August, 1886	.....	61	1,883	.....	245	.....	.....	150,837
September, 1886	47	.....	5,983	.....	962	15,538	1,089	275,399
October, 1886	.....	.....	4,241	.....	2,209	27,622	4,581	613,916
November, 1886	.....	.....	2,480	.....	1,646	28,146	.....	1,047,588
December, 1886	47	.....	1,443	238	2,307	27,884	.....	2,080,465
January, 1887	134	.....	4,315	173	3,177	25,290	.....	2,442,489
February, 1887	90	.....	11,964	45	2,658	28,279	.....	2,701,553
March, 1887	48	12	11,202	162	4,118	29,437	1,988	3,488,446
April, 1887	278	.....	27,574	12	6,174	18,720	2,377	3,740,024
May, 1887	226	27	23,435	.....	3,600	14,832	10,225	2,724,365
June, 1887	179	140	13,977	.....	739	6,000	1,367	1,232,361
July, 1887	64	314	12,962	.....	1,099	.....	.....	661,686
August, 1887	152	21	8,994	.....	682	.....	2,233	260,126
September, 1887	.....	166	9,557	.....	184	.....	.....	354,778
October, 1887	.....	48	17,271	147	672	19,163	530	693,176
November, 1887	.....	48	26,440	92	3,143	14,805	.....	915,912
December, 1887	135	159	43,954	1,259	6,110	15,098	315	1,272,255
January, 1888	1,395	332	48,759	1,214	5,608	14,226	2,263	1,652,415
February, 1888	1,832	822	54,655	1,428	8,567	14,150	1,668	1,965,248
March, 1888	1,549	1,568	74,367	1,059	12,537	15,283	1,383	2,530,818
April, 1888	2,541	1,271	75,415	292	18,329	14,457	3,799	2,441,875
May, 1888	2,304	721	98,895	193	32,573	15,474	2,230	2,730,491
June, 1888	1,689	1,789	95,198	.....	32,124	.....	11,900	2,155,231
Total	13,276	7,537	793,563	9,304	173,259	728,900	58,035	61,033,018

DIFFERENT KINDS OF SPIRITS IN WAREHOUSE, JUNE 30, 1888.

STATEMENT OF THE QUANTITY OF SPIRITS, AS KNOWN TO THE TRADE, REMAINING IN WAREHOUSES, JUNE 30, 1888.

[Quantities in taxable gallons.]

District and State.	Bourbon whisky.	Rye whisky.	Alcohol.	Rum.	Gin.	High wines.	Pure, neutral, or cologne spirits.	Miscellaneous.	Aggregate.	Specific kinds of spirits reported in "Miscellaneous" column.
Arkansas		690						32,509	33,199	Corn.
First California	1,766						9,274		11,140	
Connecticut					16,357				16,357	
Georgia		1,031						50,293	51,324	Do.
First Illinois	70,739		4,205		5,808		29,783	752,634	863,119	Whisky.
Fifth Illinois	737,956	128,665	308,812		365	683	948,661		2,125,142	
Eighth Illinois		2,135	22,175				6,475	21,755	52,540	
Thirteenth Illinois	2,003								2,003	
Sixth Indiana	129,258	631,263	9,656					770,239	1,540,416	
Seventh Indiana	89,757	176	65,422					258,855	364,210	
Fourth Iowa	2,018								2,018	
Second Kentucky	3,056,839	28,031							3,084,870	
Fifth Kentucky	17,840,342	862,394	23,140			4,768		16,170	18,746,814	Malt whisky.
Sixth Kentucky	2,591,489	346,701	6,238	59,260	12,131			1,415,779	4,431,598	Do.
Seventh Kentucky	5,492,149	813,587	88					101,788	6,407,612	Copper-distilled and malt whisky.
Eighth Kentucky	2,852,303	229,231							3,081,534	
Maryland		3,973,641	532			16,672	158,067		4,148,912	
Third Massachusetts				651,926	27,368				679,294	
First Missouri	84,445	2,949	9,257		47		10,766	5,336	112,800	Corn whisky and whisky.
Sixth Missouri	163,400	8,163	57,978		1,662	1,000	163,960	9,899	406,062	
Nebraska	51,139	54,570	78,883				168,748		348,340	
New Hampshire				33,455					33,455	
Fifth New Jersey		281,991							281,991	
First New York			996		20,507	1,908	14,198	51,555	89,264	
Twenty-eighth New York	61,656	175,833	1,352	1,249	920		30,153	14,217	285,380	Malt whisky.
Fourth North Carolina		688		51				41,897	42,631	Corn whisky.
Fifth North Carolina								128,752	128,752	Do.
First Ohio	1,325,237	857,244	21,227		979		12,558	854,536	3,071,781	Copper-distilled corn, malt, and whisky.
Tenth Ohio	43,619	31,188							74,807	
Eleventh Ohio	23,196	3,947			72	102,929			130,144	
Eighteenth Ohio	5,705	57,952							63,657	
Oregon		12,039							12,039	
First Pennsylvania		929,999						602	930,601	Wheat and malt whisky.
Ninth Pennsylvania		443,982				2,955			446,937	

Twelfth Pennsylvania		61,058							61,058	
Twenty-third Pennsylvania	4,383	6,512,962						570,098	7,087,443	
South Carolina								13,276	13,276	Corn whisky.
Second Tennessee		194						7,343	7,537	
Fifth Tennessee		30,926						762,637	793,563	
Fourth Texas								9,304	9,304	Do.
Sixth Virginia	97	173,162							173,259	
West Virginia	18,630	695,926						14,344	728,900	Rye malt and barley malt.
First Wisconsin	21,028	15,067	1,741		2,845	5,280	3,194	8,880	58,035	Kümmel, malt, and whisky.
Total	34,619,154	17,367,380	606,702	745,941	89,061	138,195	1,555,787	5,912,798	61,033,018	
Remaining in warehouse, June 30, 1887	40,891,717	17,502,936	352,899	792,471	81,396	179,665	497,178	4,937,007	65,145,269	

NOTE.—The term "taxable gallon," as used in these tables, signifies the gallon subject to tax at 90 cents. In the case of whisky, rum, and gin this gallon is about equal by measure to the wine gallon of 231 cubic inches, which is the United States standard in measuring liquids. This is also true of most distilled spirits used as beverages, and is owing to the fact that such spirits are mixtures of alcohol and water of about equal parts by volume, a wine gallon of such a mixture being substantially defined by the law to be the taxable gallon. If the liquor is more than half water the full gallon measure is still a taxable gallon, but if the liquor is more than half alcohol the taxable gallon does not fill the wine-gallon measure, and if the liquor is all pure alcohol the taxable gallon fills the measure just half full. For an exact definition of the gallon on which the tax is collected see sections 3249 and 3251, Revised Statutes, as amended.

DIFFERENT KINDS OF SPIRITS PRODUCED DURING THE YEAR.

STATEMENT OF THE QUANTITY IN TAXABLE GALLONS OF EACH KIND OF SPIRITS, AS KNOWN TO THE TRADE, DEPOSITED IN DISTILLERY WAREHOUSES DURING THE FISCAL YEAR ENDED JUNE 30, 1899.

District and State.	Bourbon whisky.	Rye whisky.	Alcohol.	Rum.	Gin.	High wines.	Pure, neutral, or cologne spirits.	Miscellaneous.	Aggregate.	Specific kinds of spirits reported in "Miscellaneous" column.
Alabama								1,343	1,343	Corn whisky.
Arkansas								63,667	63,667	Do.
First California	7,562						209,993		217,555	
Fourth California	783								783	
Connecticut					84,073				84,073	
Georgia								388,832	388,832	Do.
First Illinois	34,105		1,605,227		197,964	319	4,157,285	817,744	6,812,744	Whisky other than sour mash.
Fifth Illinois	75,361	74,051	3,813,065		192,648	267,633	16,724,420	1,408,124	22,555,312	Whisky.
Eighth Illinois			948,801			1,285	1,099,161	10,409	2,059,656	
Thirteenth Illinois	6,409		9,524			96	43,564	2,320	61,913	Do.
Sixth Indiana	105,089	287,200	272,843		25,279	237,187	211,274	1,377,979	2,516,851	
Seventh Indiana	62,029	274	486,090					2,489,902	3,038,295	Spirits and whisky.
Fourth Iowa										
Second Kentucky	2,365,037		27,528						2,392,565	
Fifth Kentucky	12,002,721	497,151	635,155			32,826	12,788	21,812	13,202,453	
Sixth Kentucky	1,409,905	228,595	68,409	23,155	91,367		55,554	2,067,603	4,143,588	Whisky and malt.
Seventh Kentucky	3,103,502	528,786	1,578		2,585			168,084	3,804,535	Malt and copper distilled.
Eighth Kentucky	1,434,785	152,555							1,587,340	
Maryland		1,476,172				159,738	340,970		1,976,880	
Third Massachusetts				1,427,894	75,334				1,503,228	
Minnesota			451,204				648,236	40,621	1,140,061	Whisky.
First Missouri	43,426	8,038	396,296		49,628	137	752,665	55,132	1,305,322	Whisky and corn whisky.
Sixth Missouri	128,719	8,803	342,766		5,532	53	650,785	7,449	1,144,107	Corn whisky.
Nebraska	188,686	19,874	767,338				1,248,239		2,174,137	
New Hampshire				20,862					20,862	
Fifth New Jersey		335,084					120,123		455,207	
First New York			305,497		149,710	129	724,660	52,199	1,232,185	
Twenty-eighth New York	57,927	56,702	57,852		31,576	7,443	327,484		538,984	
Fourth North Carolina		467		143				70,415	71,025	
Fifth North Carolina								591,672	591,672	Corn whisky.
First Ohio	909,926	389,599	603,012		116,025	42,847	2,640,682	2,656,023	7,358,114	Copper-distilled corn and malt whisky.
Tenth Ohio	22,794	10,362							33,156	
Eleventh Ohio	3,406	3,548				249,874	183,753	843	446,424	Wheat whisky.
Eighteenth Ohio	6,254	25,390						3,339	44,983	Potato, wheat, and malt whisky.
Oregon						6,445		988	7,433	Corn whisky.
First Pennsylvania		377,453							377,453	

Ninth Pennsylvania		331,299				1,636			332,934	
Twelfth Pennsylvania		64,485							64,485	
Twenty-third Pennsylvania	651	3,204,694			707		12,832	169,523	3,388,697	Wheat, corn, barley, malt, Montrose and copper whisky.
South Carolina								33,317	33,317	Corn whisky.
Second Tennessee		425						38,617	39,042	
Fifth Tennessee		5,262						1,106,524	1,111,786	Corn spirits.
Fourth Texas								2,316	2,316	Corn whisky.
Sixth Virginia		163,962			2,761			58,337	225,060	Do.
West Virginia	15,024	252,681				82		545	268,332	
First Wisconsin	21,603	36,856	146,960		4,779	21,766	274,816	32,963	539,903	Kümmel and malt whisky.
Total	21,960,784	8,749,768	10,939,135	1,471,054	1,029,968	1,029,496	30,439,354	13,738,952	89,368,510	
Deposited during year ended June 30, 1888	7,463,609	5,879,690	11,075,639	1,891,246	872,990	1,016,436	29,475,913	12,603,883	70,279,406	

INCREASED PRODUCTION OF SPIRITS.

The quantity of spirits (89,358,510 gallons) produced and deposited in distillery warehouses during the fiscal year ended June 30, 1889, is more than the production (70,279,406 gallons) of the year 1888 by 19,079,104 gallons. The difference is distributed among the different kinds known to the trade as follows:

	Gallons.	Gallons.
Increase in the production of—		
Bourbon whisky		14,497,175
Rye whisky		2,870,078
Gin		156,978
High wines		13,059
Pure, neutral, or cologne spirits		963,441
Miscellaneous		1,135,069
Total increase		19,635,800
Decrease in the production of—		
Alcohol	136,504	
Rum	420,192	
Total decrease		556,696
Net increase		19,079,104

PRODUCTION OF DISTILLED SPIRITS.

STATEMENT OF DISTILLED SPIRITS DEPOSITED IN BONDED WAREHOUSES DURING THE PAST TWELVE YEARS.

Fiscal years ended June 30—	Spirits warehoused.				
	Grape brandy.	Bourbon whisky.	Rye whisky.	Alcohol.	Rum.
	Gallons.	*Gallons.*	*Gallons.*	*Gallons.*	*Gallons.*
1878	178,544	6,405,520	2,834,119	10,277,725	1,603,376
1879	69,340	8,587,061	4,001,048	19,594,283	2,243,455
1880	129,086	15,414,148	6,341,991	21,631,009	2,439,301
1881	240,124	33,632,615	9,931,609	22,988,969	2,118,506
1882	381,825	29,575,667	9,224,777	15,201,671	1,704,084
1883	223,977	8,662,245	4,784,654	10,7187706	1,801,960
1884	200 732	8,896,832	5,089,058	12,385,229	1,711,158
1885	312,197	12,277,750	6,328,043	13,476,916	2,081,165
1886	329,679	19,318,819	7,842,540	11,247,877	1,799,953
1887	673,610	17,015,034	7,313,640	10,337,035	1,857,223
1888	864,704	7,463,609	5,879,690	11,075,639	1,891,246
1889	952,358	21,960,784	8,749,768	10.939,135	1,471,054

Fiscal years ended June 30—	Spirits warehoused.				
	Gin.	High wines.	Pure, neutral, or cologne spirits.	Miscellaneous.	Total.
	Gallons.	*Gallons.*	*Gallons.*	*Gallons.*	*Gallons.*
1878	364,963	19,412,985	11,108,023	4,090,342	56,281, [illegible]
1879	372,776	18,033,652	13,459,486	5,600,840	71,961, [illegible]
1880	394,068	15,210,389	20,657,075	8,267,789	99,484, [illegible]
1881	549,596	14,363,581	23,556,008	10,586,666	117,966, [illegible]
1882	569,134	10,992,379	27,871,293	10,744,156	106,234, [illegible]
1883	545,768	8,701,951	28,295,253	10,502,771	74,297, [illegible]
1884	641,724	6,745,688	28,538,680	11,426,470	75,636, [illegible]
1885	639,461	3,235,889	27,104,882	10,811,757	75,227, [illegible]
1886	650,607	2,396,248	26,538,581	10,543,758	80,67[illegible], [illegible]
1887	747,025	2,410,923	27,066,219	11,081,500	78,505, [illegible]
1888	872,990	1,016,436	29,475,913	12,603,883	71,14[illegible], [illegible]
1889	1,029,968	1,029,495	30,439,354	13,738,952	90,31[illegible], [illegible]

TABLE SHOWING THE SERIAL NUMBER, NAME OR NAMES OF THE DISTILLER AND LOCATION OF EACH DISTILLERY WAREHOUSE IN THE UNITED STATES IN WHICH SPIRITS WERE HELD ON DEPOSIT IN THE FISCAL YEAR ENDED JUNE 30, 1889.

[NOTE.—An asterisk (*) at the end of a name in column No. 1 indicates that the name is that of the distiller who gave the distiller's annual bond May 1, 1889. In column No. 2 the letters indicate transactions during the fiscal year, as follows: "D" indicates that spirits were deposited in the warehouse; "T" that they were withdrawn upon payment of the tax; "S" that they were withdrawn for scientific purposes or for the use of the United States; "E" that they were withdrawn for export; "M" that they were withdrawn for transfer to manufacturing warehouses, and "W" that spirits remained in the warehouse at the close of the year. The name and address stated in columns 1, 4 and 5 are those given by the storekeeper in his reports relative to the distillery warehouse. In column 6 the section of the State in which the warehouse is located is indicated by the letters used to designate points of the compass, except that the letter C indicates the central portion of the State.]

ALABAMA.

Name of distiller.	Distillery number and transaction.		District.	Post-office or town.	County.	Section of State.
1	2		3	4	5	6
J. M. & J. D. Paterson	13	D, T, W	Alabama	Adelia	Calhoun	NE.
Sheats & Mynott	14	D, T	do	Crooked Creek	Cullman	N.

ARKANSAS.

H. C. Ward*	5	D, T, W	Arkansas	Malvern	Hot Springs	C.
S. L. Edison*	18	D, T, W	do	Spring Dale	Washington	NW.
Wm. Easterling	24	T	do	Wharton Creek	Madison	N.
Wm. P. Kirby	24	T	do	Wharton Creek	Madison	N.
McWhirter & Logan*	24	D, T, W	do	Wharton	Madison	NW.
McWhorter & Canfield.	24	D, T, W	do	Wharton	Madison	NW.
J. H. Cato*	27	D, T, W	do	Farmington	Washington	NW.
Hickman & Bates	32	T	do	Osage Mills	Benton	NW.
Cotton & Welch*	54	D, T, W	do	Dardanelle	Yell	W.
Frauenthal & Allinder.	57	T	do	Conway	Faulkner	C.
M. G. Howard	59	T	do	Oakland	Marion	N.
T. J. Mallonee*	59	D, T, W	do	New Oakland	Marion	N.
J. P Jones*	72	D, T, W	do	Williford	Sharp	N.
R. F. Flatt*	88	D, T, W	do	Logan	Benton	NW.
Williams & Co.*	91	D, T, W	do	Francis	Boone	NW.
Nicks & Co.*	99	D, T, W	do	Franklin	Izard	N.
Paterson & Brumitt	99	T, W	do	do	do	N.
McBride & Arnold*	100	D, T, W	do	Marshall	Searcy	N.
Wilks & Co	114	D, T	do	Hindsville	Madison	N.
W N. Wilks*	114	D, T, W	do	do	do	N.
A. B. Paterson	117	T	do	Yelville	Marion	N.
Covey & Co.*	118	D, T, W	do	Nebo	Benton	NW.
Cowan Bros.*	119	D, T, W	do	Pettigrew's Mills	do	NW.
R. W Earnheart	120	D, T, W	do	Batesville	Independence	N.
J. R. Patterson*	120	D, T	do	do	do	N.
Frey & Black*	121	T, W	do	Bayou Meto	Arkansas	E.
Stevens Bros	125	T	do	Star of the West	Pike	SW.
Alex. Henderson	126	T	do	Smithville	Lawrence	NE.
Patterson & Co.*	126	D, T, W	do	do	do	NE.
C. E. Noyes*	129	D, T, W	do	Siloam Springs	Benton	NW.
Thornton Bros	130	T	do	Mountain Glen	Garland	C.
George W. Finn	131	D, T, W	do	Mundell	Carroll	NW.
M. L. Kelly	131	D, T	do	do	do	NW.
J. T. Davis & Son*	132	D, T, W	do	Marble	Madison	NW.
W. M. Davis*	138	D, T, W	do	Bellefonte	Boone	NW.
Thomas & Grose*	143	D, T, W	do	Drake's Creek	Madison	NW.
A. Gossett*	154	D, T, W	do	Newark	Independence	N.
M. C. Bristow*	155	D, T, W	do	Evening Shade	Sharp	N.
James L. Wilson*	156	D, T, W	do	Gubertown	Craighead	NE.
Engel & Moore*	157	D, T	do	Shoal Creek	Logan	W.
Nashville Dist'g Co.*	158	D, T, W	do	Nashville	Howard	SW.
Peters & Lovitt*	159	D, T, W	do	Mulberry	Franklin	NW.
Shoban & Co	160	D, T, W	do	Green Forest	Carroll	NW.

NAMES OF DISTILLERS AND LOCATION OF DISTILLERY WAREHOUSES IN WHICH SPIRITS WERE HELD ON DEPOSIT, ETC.—Continued.

CALIFORNIA.

Name of distiller.	Distillery number and transaction.		District.	Post-office or town.	County.	Section of State.
1	2		3	4	5	6
Golden Gate Distilling Company.	1	D, W	First	San Francisco	San Francisco	W.
California Distilling Co., C. Jost, jr.	8	D, T.	do	Antioch	Contra Costa	W.
Kendrick & Gaddis	15	D, T, W	Fourth	Nevada City	Nevada	C.

CONNECTICUT.

H. Barber*	1	D, T, W	Connecticut	Warehouse Point	Hartford	N.

GEORGIA.

Sosebee & Allen	2	T	Georgia	Clarkesville	Habersham	NE.
George W. Cureton*	3	D, T, W	do	Rising Fawn	Dade	NW.
Kilgore Bros	4	T	do	Stone Mountain	Gwinnett	N.
Cagle Bros.*	5	D, T, W	do	Tate	Pickens	N.
J. H. Shackleford	7	D, T, W	do	Griffin	Spalding	W.
W. Patrick & Co	8	D, T	do	do	do	W.
J. M. McAfee*	9	D, T, W	do	Canton	Cherokee	N.
R. P. Daniel*	11	D, T, W	do	Eagle Cliff	Walker	NW.
Church & Sosebee	12	T	do	Clarksville	Habersham	NE.
G. W. Chamlee*	13	D, T, W	do	Canton	Cherokee	N.
R. C. Castleberry*	14	D, T, W	do	Gainesville	Hall	N.
R. A. Chewning	15	D, T, W	do	Stone Mountain	Gwinnett	N.
W. S. Carroll	15	T	do	do	do	N.
B. W. T. Jeffares	15	T	do	do	do	N.
J. C. Jett*	17	D, T, W	do	Duluth	do	N.
J. R. Clemens*	18	D, T, W	do	Summerville	Chattooga	NW.
Johnson & Clemens	18	D, T	do	do	do	NW.
R. W. Bagby*	19	D, T, W	do	Covington	Newton	C.
H. C. Cumming*	21	D, T, W	do	Griffin	Spalding	W.
J. N. Ridgway*	22	D, T, W	do	High Shoals	Oconee	N.
W. J. Brown	23	D, T	do	Stone Mountain	Gwinnett	N.
J. H. Matthews*	24	D, T, W	do	Athens	Clarke	N.
M. F. Morris*	25	D, T, W	do	Griffin	Spalding	W.
Bra'ch Corn Dis'g Co*	28	D, T, W	do	Marietta	Cobb	N.
Payne & Wood	29	T, W	do	Sutallee	Cherokee	N.
F. M Glover & Co	30	D, T	do	Franklin	Heard	W.
F. M. Glover*	30	D, T, W	do	do	do	W.
M. C. Livsey*	31	D, T, W	do	Lawrenceville	Gwinnett	N.
S. K. Payne*	32	D, T, W	do	Cherokee Mills	Cherokee	N.
L. N. Lewis	34	D, T, W	do	Cartersville	Bartow	NW.
A. T. Smith	35	D, T	do	Monroe	Walton	N.
T. J. Mitcham & Bro.	36	T	do	Walnut Grove	do	N.
Moore Boys*	37	D, T, W	do	Moore's Mills	Cherokee	N.
C. E. Smith*	38	D, T, W	do	Newnan	Coweta	W.
J. A. Fowler*	39	D, T, W	do	Athens	Clarke	N.
J. W. Gilliam & Co.*	44	D, T, W	do	Blue Ridge	Fannin	N.
G. M. McKinnon	45	D, T, W	do	Gilmore	Cobb	N.
Zenary Watkins*	51	D, T	do	Cherry Log	Gilmer	S.
Swords & Cochran	53	D, T, W	do	Madison	Morgan	C.
D. N. Freeman	54	D, T	do	Flat Shoals	Meriwether	W.
W. H. Hartnett*	54	D, T, W	do	Neal	do	W.
W. J. & J. Orr	58	T	do	Madison	Morgan	C.
A. M. Lyon*	65	D, T, W	do	Tobler	Upson	W.
Carter & Taylor*	87	D, T, W	do	Carters	Gordon	NW.
Tatum Bros*	111	D, T, W	do	Talking Rock	Pickens	N.
W. J. Gardiner & Co*	130	D, T, W	do	Bainbridge	Decatur	SW.
J. M. Swords & Co	136	D, T, W	do	Lawrenceville	Gwinnett	N.
W. E. Mulkey*	164	D, T, W	do	Cartecay	Gilmer	S.
E. B. Wilson	181	D, T	do	Blue Ridge	Fannin	N.
J. E. Wilson	181	D, T, W	do	do	do	N.
S. A. King*	188	D, T, W	do	Jasper	Pickens	N.
G. F. Garner	215	D, T	do	Line Branch	Polk	NW.
J. E. Street	215	D, T, W	do	Buchanan	Haralson	W.

OF DISTILLERS AND LOCATION OF DISTILLERY WAREHOUSES IN WHICH SPIRITS WERE HELD ON DEPOSIT, ETC.—Continued.

GEORGIA—Continued.

s of distiller.	Distillery number and transaction.		District.	Post-office or town.	County.	Section of State.
1	2		3	4	5	6
J. A. Lewis*	218	D, T, W	Georgia	Texas	Heard	W.
Jross	221	D, T, W	do	Grantville	Meriwether	W.
etree*	222	D, T, W	do	Woodstock	Cherokee	N.
ton Bros.	226	T	do	Palmetto	Campbell	W.
dell & Co.*	237	D, T, W	do	Bascobel	Madison	NE.
as B. Blake*	239	D, T, W	do	Smith	Dade	NW.
Anderson*	243	D, T, W	do	Hot House	Fannin	N.
ner*	246	D, T, W	do	Jasper	Pickens	N.
Timmons & Co	247	D, T	do	Mineral Bluff	Fannin	N.
Tarriba*	250	D, T, W	do	Johnstown	Dawson	N.
en & Co.*	253	D, T, W	do	Vining Station	Cobb	N.
Cooper*	279	D, T, W	do	Flowery Branch	Hall	N.
*	280	D, T, W	do	Orange	Cherokee	N.
Ayecock, jr.*	281	D, T, W	do	Monroe	Walton	N.
S. Starr	282	D, T	do	Bremen	Carroll	W.
Brown*	284	D, T, W	do	Lawrenceville	Gwinnett	N.
& Bearden*	285	D, T, W	do	Mineral Springs	Pickens	N.
& Presley*	287	D, T, W	do	Tate	do	N.
Williamson*	293	D, T, W	do	Acworth	Cherokee	N.
ms & Wheeler	302	D, T	do	do	do	N.
M. James*	306	D, T, W	do	Salt Springs	Douglass	W.
larksdale*	306	D, T, W	do	Geneva	Talbot	W.
fitcham*	316	D, T, W	do	Walnut Grove	Walton	N.
Carter	329	D, T, W	do	Monroe	do	N.
Sorrells*	329	D, T	do	do	do	N.
Wetherby*	333	D, T, W	do	Cave Springs	Floyd	NW.
Pickett*	355	D, T, W	do	Mountaintown	Gilmer	S.
Pace*	358	D, T, W	do	Atlanta	Fulton	N.
Fincannon &	361	D, T, W	do	Tickanetly	Gilmer	S.
ullock*	363	D, T, W	do	Warm Springs	Meriwether	W.
Johnson*	364	D, T, W	do	Mineral Springs	Pickens	N.
Duncan	365	D, T, W	do	Leesburgh	Lee	SW.
Wilson*	369	D, T, W	do	Morganton	Fannin	N.
Teem & Co.*	421	D, T, W	do	Cartecay	Gilmer	S.
Holt*	444	D, T, W	do	do	do	S.
Carmichael*	447	D, T, W	do	Hickory Flat	Cherokee	N.
Sword*	633	D, T, W	do	Loganville	Walton	N.
Moore*	808	D, T	do	Lula	Hall	N.
Jarland*	858	D, T, W	do	Jordan's Store	Pike	W.
Bancroft	860	D, T, W	do	Thomaston	Upson	W.
& Perryman*	860	T	do	do	do	W.
Kellar & Son	863	T	do	Toccoa	Franklin	NE.
& Walters*	864	D, T, W	do	Suwanee	Gwinnett	N.
es & Moore*	867	D, T, W	do	Stone Mountain	do	N.
Bussey*	871	D, T, W	do	Warm Springs	Meriwether	W.
Wood*	884	D, T, W	do	Newnan	Coweta	W.
Paine	1105	D, T	do	Cherokee Mills	Cherokee	N.

ILLINOIS.

Graham	2	T	First	Rockford	Winnebago	N.
am Brothers*	2	D, T, W	do	do	do	N.
re Dist'g Co	3	T, W	do	Chicago	Cook	NE.
Rice Dist'g Co.	3	T, S, W	do	do	do	NE.
go Dist'g Co	5	T, W	do	do	do	NE.
ngham Dist'g	5	T, W	do	do	do	NE.
dale Dist'g Co.*	6	D, T, W	do	Riverdale	do	NE.
ix Dist'g Co.*	7	D, T, S, W	do	Chicago	do	NE.
Chemical Co.	8	D, T	do	Gary	do	NE.
Shufeldt & Co.*	9	D, T, S, W	do	Chicago	do	NE.
Dist'g Co	38	T, W	do	do	do	NE.
e Brothers	1	D, T, W	Fifth	Peoria	Peoria	C.
e Bros. Dist'g	1	W	do	do	do	C.
Barker Dist'g	3	D, T, S, E, W	do	do	do	C.

NAMES OF DISTILLERS AND LOCATION OF DISTILLERY WAREHOUSES IN WHICH SPIRITS WERE HELD ON DEPOSIT, ETC.—Continued.

ILLINOIS—Continued.

Name of distiller.	Distillery number and transaction.		District.	Post-office or town.	County.	Section of State.
1	2		3	4	5	6
Zell, Schwabacher & Co.	4	T. W	Fifth	Peoria	Peoria	C.
Northern Dist'g Co.*	4	D, T, S, E, W	do	do	do	C.
Bush & Brown Dist'g Co.*	5	D, T	do	do	do	C.
Woolner Bros. Dist'g Co.*	8	D, T, M, E, W	do	do	do	C.
Monarch Dist'g Co.*	9	D, T, S, M, E, W.	do	do	do	C.
Gt. Western Dist'g Co.*	11	D, T, S, E, W	do	do	do	C.
Manhattan Dist'g Co*	12	D, T, S, E, W	do	do	do	C.
Gt. Eastern Dist'g Co*	14	T, W	do	do	do	C.
Hamburg Dist'g Co.*	1	D, T, E, W	Eighth	Pekin	Tazewell	C.
Enterprise Dist'g Co	3	W	do	do	do	C.
The Star Dist'g Co.*	4	D, T, W	do	do	do	C.
John W. Stringham	28	D, T, W	do	Jacksonville	Morgan	W.
Pfeffer Dist'y Co.	2	T	Thirteenth	Lebanon	St. Clair	SW.
Belleville Dist'y Co.	3	D, T, W	do	Belleville	do	SW.

INDIANA.

Shelby Distilling Co.	1	T	Sixth	Shelbyville	Shelby	C.
John F. Pfeffer	2	T, W	do	Indianapolis	Marion	C.
Powell & Feaster	3	T, W	do	Waldron	Shelby	C.
Bennett Powell*	3	D, W	do	do	do	C.
The Aurora Dist'g Co*	4	D, T, E, W	do	Aurora	Dearborn	SE.
The Sunny Side Distilling Co.	4	D, W	do	do	do	SE.
N. J. Walsh	7	T, W	do	Lawrenceburgh	do	SE.
The Rossville Dist'g Co.*	7	D, T, S, W	do	do	do	SE.
W. P. Squibb & Co.*	8	D, T, E, W	do	Greendale	do	SE.
W. P. Squibb & Co. for Sam'l Craddock.	8	D, T, W	do	do	do	SE.
W. P. Squibb & Co. for the Century Dist'g Co.	8	D, T, W	do	do	do	SE.
The Cherokee Dist'g Co.	8	D, T, W	do	do	do	SE.
The Clear Spring Dist'g Co.	8	D, W	do	do	do	SE.
The S. C. Barker Dist'g Co.	8	D, W	do	do	do	SE.
The Nelson Dist'g Co.	8	D, W	do	do	do	SE.
N. Oester*	9	D, T, W	do	Lawrenceburgh	do	SE.
Scott & Turley*	14	D, T, W	do	Mitchell	Lawrence	S.
Kosmus Friedrich*	29	D, T, W	do	Harrison	Dearborn	SE.
Terre Haute Dist. Co	1	T	Seventh	Terre Haute	Vigo	W.
Wabash Dist'g Co.*	1	D, T, S, W	do	do	do	W.
August Krogman*	2	D, T, W	do	Tell City	Perry	S.
W. T. Ferguson*	5	D, T, W	do	Lake	Spencer	S. W.
Henry Zum Felde*	6	D, T, W	do	Indian Springs	Martin	S. W.

IOWA.

W. C. Hoover	10	T, W	Fourth	Oskaloosa	Mahaska	S.

ISTILLERS AND LOCATION OF DISTILLERY WAREHOUSES IN WHICH SPIRITS WERE HELD ON DEPOSIT, ETC.—Continued.

KENTUCKY.

...r.	Distillery number and transaction.		District.	Post-office or town.	County.	Section of State.
	2		3	4	5	6
...ton.	1	T, W	Second	East Fork	Metcalf	S.
...Co.*	2	D, E, T, W	do	Owensborough	Daviess	W.
...	2	D, T, W	do	do	do	W.
...	3	D, E, T, W	do	do	do	W.
...Co..	4	T	do	Memphis June	Warren	S.
... &	4	T	do	do	do	S.
...t'y	4	D, T, W	do	do	do	S.
...	4	T, W	do	do	do	S.
...	4	T, W	do	do	do	S.
Ta-	4	T, W	do	do	do	S.
...	5	D, W	do	Rumsey	McLean	W.
...y Co	6	T	do	Uniontown	Union	W.
...Co	6	D, T, W, E	do	do	do	W.
...o..	6	D, T, W	do	do	do	W.
...Co*	6	D, T, W	do	do	do	W.
...Co.	6	D, T, W	do	do	do	W.
...t'y	6	D, W	do	do	do	W.
...Co..	6	D, W	do	do	do	W.
...g Co	6	D, W	do	do	do	W.
...Co.*	7	D, T, W	do	Yelvington	Daviess	W.
...	8	D, E, T, W	do	Garrison's Landing.	do	W.
...	9	D, T, W	do	Owensborough	do	W.
...st'g	10	T, W	do	do	do	W.
...st'g	11	D, T, W	do	do	do	S.
...g Co.	11	D, W	do	do	do	S.
...Co..	11	D, W	do	do	do	S.
...	11	D, W	do	do	do	W.
...Co...	11	D, W	do	do	do	W.
...e &	12	T	do	Peter's Creek	Barren	S.
...	12	D, T, W	do	do	do	S.
...Club	13	T	do	Owensborough	Daviess	W.
...	13	D, T, W	do	do	do	W.
...ook-	14	T	do	Glasgow	Barren	S.
...urch*	14	D, T, W	do	do	do	S.
...	15	D, T, W	do	Kaler	Graves	SW.
...g Co.	16	T, W	do	Burk's City	Daviess	W.
...g Co.	16	T	do	do	do	W.
...g Co.*	17	D, T, W	do	Owensborough	do	W.
...g Son	17	D, W	do	do	do	W.
...st'g	18	D, T, W	do	do	do	W.
...	18	D, W	do	do	do	W.
...	18	D, W	do	do	do	W.
...	19	D, T, W	do	Henderson	Henderson	W.
...d ...	20	T	do	Glasgow	Barren	S.
...rd...	20	D, T	do	do	do	S.
...on ..	21	D, T	do	Hawesville	Hancock	W.
...	22	D, T, W	do	Hammonsville	Hart	C.
...lard	24	T	do	Owensborough	Daviess	W.
...o ...	24	T	do	do	do	W.
...Cul-	24	D, T, W	do	do	do	W.
...&Co'	24	D, W	do	do	do	W.
...Co..	24	D, E, T, W	do	do	do	W.
...Co *.	26	T, W	do	Lewisport	Hancock	W.
...y....	28	T	do	Tompkinsville	Monroe	S.
...i....	29	D, T, W	do	Owensborough	Daviess	W.
...*....	30	D, T, W	do	Leach	Grayson	W.
...	31	D, T, W	do	Barren	Allen	S
...Co.*	32	E, T, W	do	Henderson	Henderson	W
...g Co.	33	T, W	do	Owensborough	Daviess	W.

NAMES OF DISTILLERS AND LOCATION OF DISTILLERY WAREHOUSES IN WHICH SPIRITS WERE HELD ON DEPOSIT, ETC.—Continued.

KENTUCKY—Continued.

Name of distiller.	Distillery number and transaction.		District.	Post-office or town.	County.	Section of State.
1	2		3	4	5	6
John Burks*	34	D, T, W	Second	Hiseville	Barren	S.
W. W. Pipkin*	35	T, W	do	Holland	Allen	S.
Baker & Kimbly	36	T, W	do	Carrollton	Carroll	N.
T. M. Baker	36	D, T, W	do	do	do	N.
J. B. King*	37	T, W	do	Carneyville	Grayson	W.
W. T. Pottinger & Co.	38	T	do	Dennis	Logan	SW.
James E. Thrasher*	38	D, T, W	do	do	do	SW.
Clemons & Higdon	39	T	do	Dog Creek	Hart	C.
Clemons & Co	39	D, T	do	do	do	C.
Clemons & Co. "N. F."	39	D, T	do	do	do	C.
Clemons, Hawkins & Co.*	39	D, T, W	do	do	do	C.
John Z. Clemons	39	D, W	do	do	do	C.
Hooper & Co.*	40	D, T, W	do	Leitchfield	Grayson	W.
Giles, Kelly & Co.	40	T, W	do	do	do	W.
W. D. Quigley*	41	D, T, W	do	Nobob	Barren	S.
J. L. Reavis	42	T	do	Bowling Green	Warren	S.
John Pitcock	43	T, W	do	Tompkinsville	Monroe	S.
J. E. Poynter & Co.*	45	D, T, W	do	Hiseville	Barren	S.
R. G. Long	46	T	do	Roseville	do	S.
Sanders Hunter*	46	D, T, W	do	do	do	S.
F. W. Wade*	47	D, T, W	do	Jamestown	Russell	S.
Reynolds & Darter	48	T, W	do	Glasgow	Barren	S.
F. E. Robertson	49	T	do	Marion	Crittenden	W.
F. E. Robertson & Co.*	49	D, T, W	do	do	do	W.
E. W. Worsham & Co.*	50	T, W	do	Henderson	Henderson	W.
E. W. Worsham & Co., "E. W. W."	50	D, T, W	do	do	do	W.
John Howell	52	T, W	do	Bowling Green	Warren	S.
Joseph Schneider*	52	D, T, W	do	do	do	S.
Clark & Harper	53	T	do	Coldwater	Calloway	SW.
J. M. Alexander & Bros.	53	D, W	do	do	do	SW.
W. D. Stephens*	54	D, T, W	do	Leitchfield	Grayson	W.
Clark & Martin*	55	D, T, W	do	Columbus	Hickman	SW.
Harper & Dulaney*	56	D, T, W	do	Mayfield	Graves	SW.
C. S. Duffer*	57	D, T, W	do	Adolphus	Allen	S.
J. B. King	58	T	do	Glasgow	Barren	S.
Burkhart & Reed*	59	D, T, W	do	Oak Level	Marshall	C.
Robert Toomey	60	T	do	Randolph	Metcalf	S.
Toomey & Whitlow	60	D, W	do	do	do	S.
R. H. Tuck*	61	D, T, W	do	Franklin	Simpson	S.
Davis & Poteet	62	T	do	South	Edmonson	W.
Willis & Hays	62	T	do	do	do	W.
Davis & Willis	62	D, T, W	do	do	do	W.
Thompson & Poteet	63	T	do	Cub Run	Hart	C.
Thompson & Bro.*	63	D, T, W	do	do	do	C.
J. H. Quigley	64	T, W	do	Nobob	Barren	S.
D. C. Butler	65	T	do	Alvaton	Warren	S.
G. A. Hurt*	65	D, T, W	do	do	do	S.
W. J. Meredith & Co.*	66	D, T, W	do	Big Clifty	Grayson	W.
Miller Bros.*	67	D, T, W	do	Crocus	Adair	S.
Compton & Long	68	T	do	Gamaliel	Monroe	S.
Jesse Compton*	68	D, T, W	do	do	do	S.
Peden, Lain & Williams.	69	T	do	Fountain Run	do	S.
Bivins & Wells*	69	D, T, W	do	do	do	S.
Foster & Foster	70	D, T, W	do	Scottaville	Allen	S.
J. M. Wilkinson	71	D, W	do	Woodburn	Warren	S.
Miles & Buttram	72	W	do	Brownsville	Edmonson	W.
Oak View Distg. Co.*	73	D, T, W	do	Nickells	Livingston	S.
Lamb & Cochran*	74	D, T, W	do	Coldwater	Calloway	SW.
Lamb & Robertson	74	D, T, W	do	do	do	SW.
J. M. Stephenson*	75	D, T, W	do	Roena	Russell	S.
David Stinson*	76	D, T, W	do	Mount Aeriel	Allen	S.
Powers Tarter	77	W	do	Rocky Hill	Edmonson	W.
Giles Kelly & Co. "O. F."	78	D, T, W	do	Leitchfield	Grayson	W.
Giles, Kelly & Co.* "N. F."	78	D, T, W	do	do	do	W.
Giles Kelly	78	T, W	do	do	do	W.

DISTILLERS AND LOCATION OF DISTILLERY WAREHOUSES IN WHIC SPIRITS WERE HELD ON DEPOSIT, ETC.—Continued.

KENTUCKY—Continued.

iller.	Distillery number and transaction.		District.	Post-office or town.	County.	Section of State.
	2		3	4	5	6
.....	79	T	Second	Petroleum	Allen	S.
afton	81	D, T, W	do	Dallam's Creek	Logan	SW
.....	82	T	do	Scottsville	Allen	S.
rning	82	D, W	do	do	do	S.
.....	83	D, T, W	do	Smith's Grove	do	S.
ier...	84	D, T, W	do	Rocky Hill	Barren	S.
& Co*	84	D, W	do	do	do	S.
.....	86	D, T	do	Crutchfield	Hickman	SW
.....	87	T, W	do	Hopkinsville	Edmonson	W.
ggs...	88	T	do	Rocky Hill Station.	do	W.
Co.*..	88	D, T, W	do	do	do	W.
& Co.*	89	D, T, W	do	New Roe	Allen	S.
.....	90	D, T, W	do	Coral Hill	Barren	S.
.....	91	T, W	do	Temple Hill	do	S.
.....	93	D, T, W	do	Glasgow	do	S.
.....	94	D, T, W	do	Haley's Mill	Christian	SW
.....	95	D, T, W	do	Boles	Monroe	S.
.....	139	D, T, W	do	Big Clifty	Grayson	W.
.....	139	T, W	do	do	do	W.
.....	140	D, T, W	do	Mount Hermon	Monroe	S.
Co..	1	D, T, E, W	Fifth	Louisville	Jefferson	N.
o....	1	D, W	do	do	do	N.
.....	1	D, T, W	do	do	do	N.
Co..	1	D, T, W	do	do	do	N.
Grass	1	D, W	do	do	do	N.
o.....	1	D, T, W	do	do	do	N.
mer's	1	D, W	do	do	do	N.
Co...	1	D, T, W	do	do	do	N.
J. B."	1	D, T, W	do	do	do	N.
Co...	1	D, T, W	do	do	do	N.
ms...	1	D, W	do	do	do	N.
Co...	2	T, W	do	do	do	N.
Dist'y	2	D, T, W	do	do	do	N.
.....	2	D, W	do	do	do	N.
on...	2	D, T, W	do	do	do	N.
.....	2	D, T, W	do	do	do	N.
illery	2	D, T, W	do	do	do	N.
"						N.
ly &	2	T, E, M, W	do	do	do	
.....	2	T, W	do	do	do	N.
.....	2	T, W	do	do	do	N.
Sons	2	D, T, W	do	do	do	N.
Co....	2	D, T, W	do	do	do	N.
y Co.*	2	D, T, S, W	do	do	do	N.
.....	2	D, T, W	do	do	do	N.
ly &	2	D, T, W	do	do	do	N.
f."						
"B.	2	D, T, W	do	do	do	N.
ams..	2	D, T, W	do	do	do	N.
.....	2	D, T, W	do	do	do	N.
Distil-	2	D, T, W	do	do	do	N.
ler....	2	D, W	do	do	do	N.
ingly	2	D, W	do	do	do	N.
llery	3	T	do	do	do	N.
.....	3	D, T, W	do	do	do	N.
.....	3	D, T, W	do	do	do	N.
.....	3	T, W	do	do	do	N.
illery	3	T, W	do	do	do	N.
.....	3	D, T, W	do	do	do	N.
Co...	3	D, T, W	do	do	do	N.
achan	3	D, T, W	do	do	do	N.
ams..	3	D, T, W	do	do	do	N.

NAMES OF DISTILLERS AND LOCATION OF DISTILLERY WAREHOUSES IN WHICH SPIRITS WERE HELD ON DEPOSIT, ETC.—Continued.

KENTUCKY—Continued.

Name of distiller.	Distillery number and transaction.		District.	Post-office or town.	County.	Section of State.
1	2		3	4	5	6
F. Madlener	3	D, W	Fifth	Louisville	Jefferson	N.
The Nelson Distillery Co. "F. W. A."	4	D, T, E, W	do	do	do	N.
Nelson Dist'y Co.*	4	D, T, W	do	do	do	N.
W. H. Head & Co.*	9	D, T, W	do	Raywick	Marion	C.
N. W. Lee*	20	D, T, W	do	Columbus	Owen	N.
J. A. Monks & Sons "G. W. S."	34	T	do	Louisville	Jefferson	N.
Mellwood Dist'y Co.	34	D, T, E, W	do	do	do	N.
Mellwood Dist'y Co. "R. F. B."	34	D, W	do	do	do	N.
R. F. Balke*	34	D, W	do	do	do	N.
G. W. Schmidt	34	D, W	do	do	do	N.
E. C Luthy	34	D, W	do	do	do	N.
W. H. Jacobs	34	D, W	do	do	do	N.
Brown, Thompson & Co.	34	D, T, W	do	do	do	N.
Wolffe & Co	34	D, T, W	do	do	do	N.
Pfirrmann & Herzog	34	T, W	do	do	do	N.
W. R. Kinmon*	40	D, T, W	do	Lusby's Mills	Owen	N.
Waterfill & Frazier*	41	D, T, W	do	Bailey's Run	Anderson	C.
W. H. McBrayer*	44	D, T, E, W	do	Lawrenceburgh	do	C.
W. H. McBrayer, executors.	44	D, W	do	do	do	C.
M. S. Bond	45	T	do	Ripyville	do	C.
Wiley Searcy*	45	T, W	do	do	do	C.
The Zeno Dist'y Co.	45	D, W	do	do	do	C.
Bonnie Bros. *"C. S".	78	D, W	do	Louisville	Jefferson	N.
Ashton Dist'y Co	78	D, T, W	do	do	do	N.
Crystal Springs Distillery Co.	78	D, T, E, W	do	do	do	N.
F. Madlener "C. S.".	78	D, W	do	do	do	N.
J. M. Atherton & Co.*	87	D, T, E, W	do	Athertonville	La Rue	C.
Wm. Miller & Co	87	D, T, W	do	do	do	C.
J. F. Carter	87	D, W	do	do	do	C.
J. A. Monks & Sons	87	D, T, W	do	do	do	C.
The Anderson Distillery Co.*	97	D, T, E, W	do	Louisville	Jefferson	N.
Belle of Nelson Distillery Co.	101	D, T, E, W	do	New Hope	Nelson	C.
The New Hope Distillery Co.	101	D, T, W	do	do	do	C.
F. W. Jordan	105	T, W	do	New Liberty	Owen	N.
Owen Co. Dist'g Co.*	105	D, W	do	do	do	N.
Banner Dist'y Co	106	T, W	do	Louisville	Jefferson	N.
Stitzel Bros*	106	D, T, W	do	do	do	N.
Stitzel Bro. Co	106	D, W	do	do	do	N.
Fred Stitzell	106	D, T, W	do	do	do	N.
The Parkland Dist'y Co.	106	T, W	do	do	do	N.
Fibble & Crabb*	107	D, T, W	do	Eminence	Henry	N.
Lucas, Popham & Co.	110	D, T, W	do	New Fruit	Hardin	C.
H. McKenna*	111	D, T, W	do	Fairfield	Nelson	C.
Anderson Co., Sour Mash Dist. Co.	112	D, W	do	Tyrone	Anderson	C.
G and B. Gerdes	112	T, W	do	do	do	C.
J. A. McBrayer	112	T, W	do	do	do	C.
T. B. Ripy*	112	D, T, E, W	do	do	do	C.
L. and A. Scharff	112	T, W	do	do	do	C.
Schwabacker & Co	112	T, W	do	do	do	C.
J. S. Searcy & Co.*	120	D, T, W	do	Lawrenceburgh	do	C.
R. G. McCorkle & Co.	120	T, W	do	do	do	C.
Anderson Co. Distillery "D. & H."	134	D, T, E, W	do	Orr	do	C.
A. G. Nall	142	T	do	Bardstown	Nelson	C.
T. W. Samuels*	145	D, T, E, W	do	Deatsville	do	C.
E. L. Miles & Co.*	146	D, T, E, W	do	New Hope	do	C.
Thomas & Royston	163	T, W	do	Mt. Washington	Bullitt	C.
D. F. Brooks	163	T, E, W	do	do	do	C.
J. A. McBrayer	166	T	do	Lawrenceburgh	Anderson	C.
J. M. Walker	166	T	do	do	do	C.
J. H. McBrayer	166	T, W	do	do	do	C.

NAMES OF DISTILLERS AND LOCATION OF DISTILLERY WAREHOUSES IN WHICH SPIRITS WERE HELD ON DEPOSIT, ETC.—Continued.

KENTUCKY—Continued.

Name of distiller.	Distillery number and transaction.		District.	Post-office or town.	County.	Section of State.
1	2		3	4	5	6
J. M. Walker as "P. C. W."	166	T, W	Fifth	Lawrenceburgh	Anderson	C.
H. Sutherland*	168	D, T, W	do	Bardstown	Nelson	C.
Paul Jones	168	T, W	do	do	do	C.
J. W. Dant*	169	D, T, W	do	Chicago	Marion	C.
Smith & Smith	174	D, T, W	do	do	do	C.
A. Mayfield & Co.*	229	T, E	do	Athertonville	La Rue	C.
S. O'Bryan & Co	229	T, E	do	do	do	C.
A. Graff & Co	229	D, T, W	do	do	do	C.
Bernheim Bros. & Uri	229	D, W	do	do	do	C.
Howard & Co	229	D, T, W	do	do	do	C.
A. Mayfield & Co. "P. L. A."	229	D, T, E, W	do	do	do	C.
S. O'Bryan & Co. "P. L. A."	229	D, T, W	do	do	do	C.
J. D. Hinde	229	D, W	do	do	do	C.
J. A. Monks & Sons	229	D, T, W	do	do	do	C.
W. H. Brownfield	229	D, W	do	do	do	C.
H. Nathan & Co	229	D, W	do	do	do	C.
D. M. Beam	230	T, W	do	Bardstown	Nelson	C.
D. M. Beam as "D. M. B. & Son."	230	D, W	do	do	do	C.
H. A. Miles	230	T, W	do	do	do	C.
C. Sandheger	230	D, W	do	do	do	C.
A. G. Nall	230	W	do	do	do	C.
A. G. Nall "D. M. B. & Son."	230	T, W	do	do	do	C.
Hawkins & Bro.*	236	D, T, W	do	Ripyville	Anderson	C.
J. B. Dant*	240	D, T, W	do	Gethsemane	Nelson	C.
Cold Springs Distillery Co.	240	T, W	do	do	do	C.
Taylor & Williams	240	D, T, W	do	do	do	C.
W. B. Samuels & Co.*	241	D, T, W	do	Samuel's Depot	do	C.
W. Q. Emerson & Co.	263	T, W	do	Lebanon	Marion	C.
W. Q. Emerson & Co., "R. B. L."	263	D, T, W	do	do	do	C.
R. B. Lancaster*	263	D, T, W	do	do	do	C.
R. B. Lancaster "W. Q. & Co."	263	T, W	do	do	do	C.
J. T. S. Brown & Son	266	T	do	Clermont	Bullitt	C.
B. as A. B. Chapeze	266	D, T, W	do	do	do	C.
Wathen Mueller & Co.*	270	D, T, W	do	Lebanon	Marion	C.
New Hope Dist'g. Co.	271	T, E, W	do	New Hope	Nelson	C.
Brown, Thompson & Co.	272	T	do	Bardstown	do	C.
Mattingly & Moore	272	T, W	do	do	do	C.
Lee McGee	272	D, W	do	do	do	C.
Mattingly & Moore Dist. Co. "S. M. & E."	272	D, T, W	do	do	do	C.
Simms, Moore, & Edelen.*	272	D, T, W	do	do	do	C.
Alvin Wood & Co	272	T, W	do	do	do	C.
A. Wood & Co. "S. M. & E."	272	T, W	do	do	do	C.
Bond & Lillard*	274	D, T, W	do	Lawrenceburgh	Anderson	C.
J. H. Beam*	276	T, W	do	Bardstown	Nelson	C.
King & Fordtran	276	T, W	do	do	do	C.
Pearce, Hurt & Co	276	T, W	do	do	do	C.
The Early Times Distillery Co.	276	D, T, W	do	do	do	C.
A. G. Nall	276	D, W	do	do	do	C.
The Nelson Co., Ky., Distillery Co.*	294	D, T, W	do	Coon Hollow	do	C.
The Nelson Co., Ky., Distillery Co. "C. L. K."	294	T, W	do	do	do	C.
Alvin Wood & Co	294	T, W	do	do	do	C.
Thomas & Royston	296	T	do	Harrod's Creek	Jefferson	N.
Bonnie Bros	297	T	do	Louisville	do	N.
Bel Air Dist'y Co.	297	T	do	do	do	N.

NAMES OF DISTILLERS AND LOCATION OF DISTILLERY WAREHOUSES IN WHICH SPIRITS WERE HELD ON DEPOSIT, ETC.—Continued.

KENTUCKY—Continued.

Name of distiller.	Distillery number and transaction.		District.	Post-office or town.	County.	Section of State.
1	2		3	4	5	6
Joel B. Frazier	297	T.	Fifth	Louisville	Jefferson	N.
John G. Roach*	297	T.	do	do	do	N.
Old Times Distillery Co., "New."*	297	D, W	do	do	do	N.
A. Biggs	297	T, W	do	do	do	N.
Old Times Dist'y Co.	297	T, W	do	do	do	N.
Chas. Kobert & Co.*	299	D, T, E, W	do	Lebanon	Marion	C.
Anderson Dist'y Co.	353	T, E, W	do	Louisville	Jefferson	N.
American Dist'y Co.	354	D, T, W	do	do	do	N.
Chas. Backrow & Co.	354	D, T, W	do	do	do	N.
Bel Air Dist'y Co	354	D, T, W	do	do	do	N.
Wm. Collins & Co.	354	T, W	do	do	do	N.
Herrmann Bros.	354	T, W	do	do	do	N.
Mayflower Dist'y Co.	354	D, T, W	do	do	do	N.
Lăz. Simon & Co.	354	D, W	do	do	do	N.
Muldraugh Hill Distillery.	354	T, W	do	do	do	N.
L. Zapp & Co	354	D, T, W	do	do	do	N.
W. W. Brownfield*	355	T, W	do	Buffalo	La Rue	C.
R. Cummins & Co.*	357	D, T, W	do	Loretto	Marion	C.
Ballard & Lancaster.	357	T, W	do	do	do	C.
W. C. Smith	359	T, W	do	Colesburgh	Hardin	N.
Hollender & Co.	360	D, W	do	Louisville	Jefferson	N.
Bonnie Bros. Dist. Co. "C. P. G."	360	T, W	do	do	do	N.
Bel Air Dist'y Co.	360	T, W	do	do	do	N.
R. L. Moore & Co	360	D, T, W	do	do	do	N.
Diamond Crown Dist'g Co. "C. P. G."	360	T, W	do	do	do	N.
Diamond Crown Dist'g Co. "J. G. R."	360	W	do	do	do	N.
Joel B. Frazier.	360	T, W	do	do	do	N.
John G. Roach & Co.*	360	D, T, W	do	do	do	N.
Fidelity Dist. Co.	360	D, T, W	do	do	do	N.
Flower of Ky. Dist. Co. "J. G. R."	360	D, T, W	do	do	do	N.
Muldraugh's Hill Dist. Co. "J. G. R."	360	D, T, W	do	do	do	N.
W. L. Tileston & Co.	360	D, W	do	do	do	N.
Friedman & Co	360	D, T, W	do	do	do	N.
S. J. Holland	360	D, W	do	do	do	N.
Standard Dist. Co.	360	D, W	do	do	do	N.
Louis Zapp & Co	360	D, W	do	do	do	N.
Rugby Dist. Co	360	D, T, W	do	do	do	S.
Dohony & Brother	362	D, T, W	do	Columbia	Adair	N.
Fible, Crabb & Sterne Nat'l Dist'g Co.	363	D, T, W	do	Louisville	Jefferson	N.
John Colter	363	D, T, W	do	do	do	N.
Fidelity Dist'y Co.	363	D, T, W	do	do	do	N.
Ky. Criterion Co.	363	D, T, E, S, W	do	do	do	N.
Mayer, Son & Co.	363	D, T, W	do	do	do	N.
Mountain Lily Dist'y Co.	363	T, W	do	do	do	N.
Mulligan Dist'y Co	363	T, W	do	do	do	N.
National Dist'g Co.	363	D, T, W	do	do	do	N.
Schwab & Wallenborn	363	D, T, W	do	do	do	N.
Sweetwood Dist'y Co	363	D, T, W	do	do	do	N.
Blake, Bruce & Co.	363	D, W	do	do	do	N.
J. F. Danghertv & Co.	363	D, T, W	do	do	do	N.
J. W. Edgerly & Co.	363	D, T, W	do	do	do	N.
Victor Distilling Co	363	D, T, W	do	do	do	N.
C. Grampp & Co.	363	D, W	do	do	do	N.
Comet Dist'y Co	363	D, T, W	do	do	do	N.
J. T. S. Brown & Sons	363	D, T, W	do	do	do	N.
Rosenfield Bros.	363	D, T, W	do	do	do	N.
The Edgewood Distilling Co.	363	D, T, W	do	do	do	N.
J. B. Wathen & Bro.	363	D, T, W	do	do	do	N.
J. B. Wathen & Bro. Co.*	363	T, E, W	do	do	do	N.

DISTILLERS AND LOCATION OF DISTILLERY WAREHOUSES IN WHICH SPIRITS WERE HELD ON DEPOSIT, ETC.—Continued.

KENTUCKY—Continued.

iller.	Distillery number and transaction.		District.	Post-office or town.	County.	Section of State.
	2		3	4	5	6
rks ..	363	T, W	Fifth	Louisville	Jefferson	N.
hy....	363	D, T, W	do	do	do	N.
)....	363	D, T, W	do	do	do	N.
& Co.	363	D, W	do	do	do	N.
Dist'g	363	D, T, W	do	do	do	N.
ger &	363	D, T, W	do	do	do	N.
g Co..	363	D, W	do	do	do	N.
)....	363	D, W	do	do	do	N.
....	363	D, W	do	do	do	N.
& Co..	363	D, W	do	do	do	N.
Bro...	363	D, W	do	do	do	N.
Co....	363	D, W	do	do	do	N.
. Co ..	363	D, W	do	do	do	N.
st. Co.	363	D, W	do	do	do	N.
Co	363	D, W	do	do	do	N.
m.....	363	D, W	do	do	do	N.
)....	364	T, E, W	do	do	do	N.
er* ...	364	D, T, W	do	do	do	N.
Co.*..	368	T, W	do	do	do	N.
.....	368	D, T, W	do	do	do	N.
e.....	368	D, T, W	do	do	do	N.
.....	368	D, T, W	do	do	do	N.
Co....	368	D, T, W	do	do	do	N.
Co....	368	D, T, W	do	do	do	N.
Co	368	D, W	do	do	do	N.
C o.	368	D, T, E, W	do	do	do	N.
.....	368	D, T, W	do	do	do	N.
ist. Co	370	D, E, W	do	Calvary	Marion	C.
s. &	370	T, W	do	do	do	C.
alla-	370	D, T, W	do	do	do	C.
.....	370	D, T, W	do	do	do	C.
.....	371	T. W	do	Hunter's Depot	Nelson	C.
,jr....	372	D, W	do	Louisville	Jefferson	N.
son &	372	T, W	do	do	do	N.
'yCo.*	372	T, E, M, W	do	do	do	N.
.....	372	D, W	do	do	do	N.
.....	372	D, W	do	do	do	N.
Distil-	372	D, W	do	do	do	N.
P., jr."						
t Bal-	375	D, T, W	do	Chicago	Marion	C.
Dist'g	375	D, W	do	do	do	C.
t Rom-	375	W	do	do	do	C.
.....	376	E, T, W	do	Bradfordsville	do	C.
Co	377	T	do	Athertonville	La Rue	C.
& Co..	377	E, T, W	do	do	do	C.
.....	377	D, W	do	do	do	C.
.....	377	D, T, E, W	do	do	do	C.
ase....	377	D, W	do	do	do	C.
t'g Co.	377	D, W	do	do	do	C.
.....	377	D, W	do	do	do	C.
t Co..	377	D, W	do	do	do	C.
ead...	377	D, T, W	do	do	do	C.
Co.....	378	T, W	do	do	do	C.
.....	378	T, W	do	do	do	C.
Kahn..	379	T	do	Coon Hollow	Nelson	C.
, Ky.,	379	D, T, W	do	do	do	C.
, Ky., C. L.	379	T, W	do	do	do	C.
n.....	379	T, W	do	do	do	C.
Co....	379	T, W	do	do	do	C.

NAMES OF DISTILLERS AND LOCATION OF DISTILLERY WAREHOUSES IN WHICH SPIRITS WERE HELD ON DEPOSIT, ETC.—Continued.

KENTUCKY—Continued.

Name of distiller.	Distillery number and transaction.		District.	Post-office or town.	County.	Section of State.
1	2		3	4	5	6
A. Wood & Co. "C. L. K."	379	W	Fifth	Coon Hollow	Nelson	C.
Edward Murphy & Co.*	400	D, T, W	do	Lawrenceburgh	Anderson	C.
Murphy & Dowling	400	T, E, W	do	do	do	C.
Ed. Murphy & Co. "E. M."	400	T	do	do	do	C.
Murphy, Barber & Co*	400	D, T, W	do	do	do	C.
S. G. Foster & Co	402	T	do	Mackville	Washington	C.
Muldraugh's Hill Distilling Co.	403	T	do	Elizabethtown	Hardin	C.
Ashton Dist. Co. "D. T."	403	T	do	do	do	C
Ashton Dist'y Co	403	T, W	do	do	do	C.
T. J. Pottinger & Co	405	D, W	do	Gethsemane	Nelson	C.
G. & B. Gerdes	405	D, W	do	do	do	C.
Head & Beam*	405	D, W	do	do	do	C.
M. Walker & Son	406	D, W	do	Lawrenceburgh	Anderson	C.
S. O. Hackley*	406	D, T, W	do	do	do	C.
I. Heffman & Son	406	D, T, W	do	do	do	C.
A. R. Sutton & Co	406	D W	do	do	do	C.
J. R. Walker	406	D, W	do	do	do	C.
The Ferncliff Distillery Co.*	409	D, T, S, W	do	Louisville	Jefferson	N.
A. R. Sutton & Co	409	D, W	do	do	do	N.
S. B. Hopkins	409	T, W	do	do	do	N.
F. G. Walker.*	410	D, T, W	do	Bardstown	Nelson	C.
Astor Distilling Co.*	412	D, T, W	do	Louisville	Jefferson	N.
Belmont Dist'y Co.*	412	D, T, E, W	do	do	do	N.
F. G. Paine & Co.*	413	D, T, W	do	Pleasure Ridge	do	N.
Block, Franck & Co.	413	D, T, W	do	do	do	N.
H. Grotenkemper & Co.	413	T, W	do	do	do	N.
Lapp, Goldsmith & Co.	413	D, T, W	do	do	do	N.
Lapp, Goldsmith & Co. F. G. P. & Co.	413	T, W	do	do	do	N.
Levy & Ginsburg	413	T, W	do	do	do	N.
F. X. Schimpeler & Son.	413	D, W	do	do	do	N.
Thierman Bros	413	D, T, W	do	do	do	N.
P. Winkler's Sons	413	D, T, W	do	do	do	N.
A. Dutchateau	413	D, W	do	do	do	N.
Brown, Thompson & Co.	413	D, T, W	do	do	do	N.
H. D. Block	413	D, W	do	do	do	N.
F. Curran & Co	413	D, W	do	do	do	N.
Chas. Dennehy	413	D, W	do	do	do	N.
Wolff Dist'y Co	413	D, T, W	do	do	do	N.
Nelson Dist'y Co	413	D, W	do	do	do	N.
Grabfelder & Tachau	413	D, W	do	do	do	N.
W. S. Harris*	414	D, T, W	do	Louisville	do	N.
G. & D. Brown	415	T	do	Bardstown	Nelson	C.
R. B. as P. S. Lancaster.	415	T, E, W	do	do	do	C.
Fee Bros	415	D, W	do	do	do	C.
Lancaster & Co	415	D, W	do	do	do	C.
B. F. Colvin & Co	417	T, W	do	Willisburgh	Washington	C.
F. V. Harding	418	D, W	do	Lawrenceburgh	Anderson	C.
Anderson Co., Ky., Dist. Co.	418	D, W	do	do	do	C.
E. H. Chase & Co	418	D, W	do	do	do	C.
Anderson Co. Sour-Mash Dist. Co.*	418	D, W, T	do	do	do	C.
M. S. Bond	418	D, T, W	do	do	do	C.
J. A. McBrayer	418	T, W	do	do	do	C.
J. H. McBrayer	418	T, W, E	do	do	do	C.
R. G. McCorkle & Co.	418	T, W	do	do	do	C.
Schwabacker & Co	418	D, T, W	do	do	do	C.
Steinwender & Sellner.	418	T, W	do	do	do	C.
D. F. Brooks	418	D, W	do	do	do	C.

DISTILLERS AND LOCATION OF DISTILLERY WAREHOUSES IN WHICH SPIRITS WERE HELD ON DEPOSIT, ETC.—Continued.

KENTUCKY—Continued.

stiller.	Distillery number and transaction.		District.	Post-office or town.	County.	Section of State.
	2		3	4	5	6
.....	418	T, W	Fifth	Lawrenceburgh	Anderson	C.
& Co.*.	420	T, E, W	do	Bardstown	Nelson	C.
& Co.	420	D, T, E, W	do	do	do	C.
.....	422	T, W	do	do	do	C.
"R. B.	422	D, T, W	do	do	do	C.
*.....	425	D, T, W	do	Raywick	Marion	C.
*	428	D, T, W	do	Allendale	Green	C.
Warren ..	429	T	do	Brushy	do	C.
arren &	429	D, T, W	do	do	do	C.
ett*.....	430	T, W	do	Liletown	do	C.
Sears*...	431	T, W	do	Summersville	do	C.
Howard*.	432	D, T, W	do	New Haven	Nelson	C.
ance &	433	D, T, W	do	Hudgins	Green	C.
ver	434	D, W	do	Lawrenceburgh	Anderson	C.
.....	434	D, W	do	do	do	C.
.....	435	D, W	do	Williamsburgh	Washington	C.
.....	436	D, T, W	do	Purdy	Adair	S.
Co.* ..	437	D, T, W	do	Raywick	Marion	C.
rnard ...	438	D, T, W	do	Craycraft	Adair	S.
en	1	T, W	Sixth	Lair	Harrison	N.
egibbeu	1	T, W	do	do	do	N
Dist. Co	2	T, W	do	Milldale	Kenton	N.
& Weise	2	D, W	do	do	do	N.
Bros.	2	D, W	do	do	do	N.
y Valley	2	D, T, W	do	do	do	N.
Co.*	2	D, T, W	do	do	do	N.
er Dist.	2	D, W	do	do	do	N.
l Dist. Co	2	D, T, W	do	do	do	N.
t. Co .	2	T, W	do	do	do	N.
ills	2	T, W	do	do	do	N.
ist. Co ..	2	T, E, W	do	do	do	N.
Creek	2	D, W	do	do	do	N.
Holmes &	2	D, T, W	do	do	do	N.
Dist. Co.	2	T, W	do	do	do	N.
Distill'g	3	T, E, W	do	Dayton	Campbell	N.
Valley o.	3	T, W	do	do	do	N.
& Co.* .	3	T, W	do	do	do	N.
& Co	3	T, W	do	do	do	N.
Friday...	3	T, W	do	do	do	N.
& Co .	3	T, W	do	do	do	N.
y Dist'g	4	T	do	Wide awake	Carroll	N.
ounty (N. F.).	4	D, T, W	do	do	do	N.
& Wal-	4	T, W	do	do	do	N.
& Co...	4	D, T, W	do	do	do	N.
.....	4	D, W	do	do	do	N.
& Co ..	4	T, W	do	do	do	N.
st'g Co..	4	T	do	do	do	N.
'g Co....	4	D, T, E, W	do	do	do	N.
st'g Co..	4	W	do	do	do	N.
& Co...	4	T, W	do	do	do	N.
ist'y Co.	4	T, D, W	do	do	do	N.
rothers..	4	T, W	do	do	do	N.
& Co....	4	T, W	do	do	do	N.
wald &	4	T, W	do	do	do	N.
e Club	4	D, T, W	do	do	do	N.
ingham.	4	T, W	do	do	do	N.

NAMES OF DISTILLERS AND LOCATION OF DISTILLERY WAREHOUSES IN WHICH SPIRITS WERE HELD ON DEPOSIT, ETC.—Continued.

KENTUCKY—Continued.

Name of distiller.	Distillery number and transaction.		District.	Post-office or town.	County.	Section of State.
1	2		3	4	5	6
Standard Dist'g Co...	4	D, T, W.....	Sixth.....	Wide Awake.....	Carroll.....	N.
Charles Shaffner & Co.	4	D, T, W.....	....do.....	....do.....	....do.....	N.
Schwartz Brothers...	4	T, W	....do.....	....do.....	....do.....	N.
The F. Strauss Dist'g Co.	4	T.....	....do.....	....do.....	....do.....	N.
Louis Stern & Co	4	T, W	....do.....	....do.....	....do.....	N.
Trager, Cammann & Loeb.	4	D, W	Sixth.....	....do.....	....do.....	N.
Woodburn Dist'g Co.	4	D, T, W.....	....do.....	....do.....	....do.....	N.
H. A. Wolf & Son....	4	T, W	....do.....	....do.....	....do.....	N.
Jett Brothers.....	5	T, W	....do.....	Carrollton	....do.....	N.
Roland Distilling Co	5	T, W	....do.....	....do.....	....do.....	N.
Richland Dist'y Co.*	5	T, W	....do.....	....do.....	....do.....	N.
The C. B. Cook Co.*..	6	D, T, W	....do.....	Cynthiana	Harrison.....	N.
C B. Cook & Co.	6	T, E, W.....	....do.....	....do.....	....do.....	N.
Kenton County Distilling Co.	7	T, W	....do.....	Covington	Kenton	N.
Reynolds Dist'g Co.	7	T, W	....do.....	....do.....	....do.....	N.
Small Grain Dist'y..	7	T, W	....do.....	....do.....	....do.....	N.
American Club Dist. Co.	8	D, T, W.....	....do.....	Petersburg	Boone	N.
William Appleton & Co.	8	D, T, W.....	...do.....	....do.....	....do.....	N.
Charles Baring.....	8	T.....	....do.....	....do.....	....do.....	N.
Joseph Beck & Co...	8	D, T, W.....	....do.....	....do.....	....do.....	N.
William Bergenthal & Co.	8	D, T, W.....	... do.....	....do.....	....do.....	N.
Berkland Dist. Co ...	8	D, T, W.....	....do.....	....do.....	....do.....	N.
Berliner Bros	8	D, T, W.....	....do.....	....do.....	....do.....	N.
Sol. Black & Co	8	D, T, W.....	....do.....	....do.....	....do.....	N.
Boehm & Co	8	T, W	... do.....	....do.....	....do.....	N.
S. C. Boehm & Co	8	T, W	....do.....	....do.....	....do.....	N.
Boone County Distillery Company.	8	D, T, E, W ..	....do.....	....do.....	....do.....	N.
Breckinridge County (Ky.) Dist. Co.	8	D, T, W.....	....do.....	....do.....	...do.....	N.
Isidor Bush & Co....	8	T, W	...do.....	....do.....	....do.....	N.
Cedar Creek Dist'g Company.	8	D, T, W.....	....do.....	....do.....	....do.....	N.
Clifton Spring Dist'g Company.	8	D, T, W.....	....do.....	....do.....	....do.....	N.
Clear Spring Dist'g Company.	8	D, T, W.....	....do.....	....do.....	....do.....	N.
M. Cornhauser & Co.	8	T, W	....do.....	....do.....	....do.....	N.
G. F. Coshland & Co.	8	D, T, W.....	....do.....	....do.....	....do.....	N.
Cynthiana Club Dist'g Company.	8	D, T, W.....	....do.....	....do.....	....do.....	N.
Dallemand & Co	8	D, T, W.....	....do.....	....do.....	....do.....	N.
Charles Dennehy....	8	T, W	....do.....	....do.....	....do.....	N.
A. Duchateau.....	8	D, T, W.....	....do.....	....do.....	....do.....	N.
J. H. Duker & Bro...	8	D, T, W.....	....do.....	....do.....	....do.....	N.
Eagan Brothers.....	8	D, T, W.....	....do.....	....do.....	....do.....	N.
J. P. Eddy & Co'....	8	D, W	....do.....	....do.....	....do.....	N.
Eichold Brothers & Weiss.	8	D, T, W.....	....do.....	....do.....	....do.....	N.
Falk & Lamley	8	D, T, W.....	... do.....	....do.....	....do.....	N.
Fecheimer Brothers.	8	D, T, W.....	....do.....	....do.....	....do.....	N.
Fellner Brothers.....	8	T, W	....do.....	....do.....	....do.....	N.
M. H. Flaisheim & Co.	8	D, T, W.....	....do.....	....do.....	....do.....	N.
Freiberg, Klein & Co.	8	D, T, W.....	....do.....	....do.....	....do.....	N.
Philip Freiler	8	T, W	....do.....	....do.....	....do.....	N.
M. J. Freiler.....	8	T, W	....do.....	....do.....	....do.....	N.
J. P. Frisch & Co	8	D, W	....do.....	....do.....	....do.....	N.
Gold Leaf Dist'g Co.	8	T, W	.. do.....	....do.....	....do.....	N.
N. Gutman & Co	8	D, W	....do.....	....do.....	....do.....	N.
M. Harris Dist'g Co.	8	D, T, W.....	....do.....	....do.....	....do.....	N.
F. W. Hartman & Co.	8	D, T, W.....	....do.....	....do.....	....do.....	N.
M. Henoch & Co	8	D, T, W.....	.. do.....	.. do.....	.. do.....	N.
S. Hirsch & Co	8	D, T, W.....	....do.....	.. do.....	....do.....	N.
M. Hofman	8	D, T, W.....	....do.....	....do.....	....do.....	N.

DISTILLERS AND LOCATION OF DISTILLERY WAREHOUSES IN WHICH SPIRITS WERE HELD ON DEPOSIT, ETC.—Continued.

KENTUCKY—Continued.

distiller.	Distillery number and transaction.		District.	Post-office or town.	County.	Section of State.
1	2		3	4	5	6
ek Dist'g	8	D, T, W	Sixth	Petersburg	Boone	N.
ros...	8	D, W	do	do	do	N.
	8	T, W	do	do	do	N.
Co	8	D, T, W	do	do	do	N.
& Co	8	T, W	do	do	do	N.
Club House	8	D, T, W	do	do	do	N.
Co	8	D, T, W	do	do	do	N.
& Co	8	T, W	do	do	do	N.
ert Co	8	D, T, W	do	do	do	N.
& New-	8	D, T, W	do	do	do	N.
& Co	8	D, T, W	do	do	do	N.
of Labor	8	T, W	do	do	do	N.
oe	8	T, W	do	do	do	N.
& Co	8	D, T, W	do	do	do	N.
Dist'g Co.	8	T, W	do	do	do	N.
m & Co	8	D, T, W	do	do	do	N.
Dist'g Co.	8	T, W	do	do	do	N.
ek Dist'g	8	T	do	do	do	N.
man Bros.	8	D, T, W	do	do	do	N.
r	8	D, T, W	do	do	do	N.
nald & Co.	8	D, T, W	do	do	do	N.
er & Son	8	D, W	do	do	do	N.
Lynch	8	D, W	do	do	do	N.
vis	8	T, W	do	do	do	N.
ler	8	T, W	do	do	do	N.
Nathen &	8	D, T, W	do	do	do	N.
han & Co.	8	T, W	do	do	do	N.
ub Dist'g	8	D, T, W	do	do	do	N.
Tigho &	8	W	do	do	do	N.
n Creek	8	D, T, W	do	do	do	N.
it Dist'g	8	D, T, W	do	do	do	N.
Springs	8	D, W	do	do	do	N.
Madigan	8	D, T, W	do	do	do	N.
s Sons	8	T, W	do	do	do	N.
er & Co.	8	T, W	do	do	do	N.
lills Dist'g	8	D, W	do	do	do	N.
Valley	8	T, W	do	do	do	N.
Dist'g Co.	8	T, W	do	do	do	N.
ite, er	8	D, T, W	do	do	do	N.
eek Dist'g	8	T	do	do	do	N.
nberg	8	T, W	do	do	do	N.
illon	8	T, W	do	do	do	N.
Dist'g Co.	8	T	do	do	do	N.
Dist'g Co	8	T	do	da	do	N.
Dist'g Co	8	D, T, W	do	do	do	N.
Brothers	8	D, T, W	do	do	do	N.
Dist'g Co.	8	T, W	do	do	do	N.
engiase	8	D, T, W	do	do	do	N.
Mausbach	8	D, T, W	do	do	do	N.
tack	8	T, W	do	do	do	N.
sin	8	D, T, W	do	do	do	N.
thers	8	T, W	do	do	do	N.
others & rtl.	8	T, W	do	do	do	N.
thers	8	T, W	do	do	do	N.
	8	D, W	do	do	do	N.

NAMES OF DISTILLERS AND LOCATION OF DISTILLERY WAREHOUSES IN WHICH SPIRITS WERE HELD ON DEPOSIT, ETC.—Continued.

KENTUCKY—Continued.

Name of distiller.	Distillery number and transaction.		District.	Post-office or town.	County.	Section of State.
1	2		3	4	5	6
I. Tuteur & Sons	8	T, W	Sixth	Petersburg	Boone	N.
Wm. A. Tyler	8	D, T, W	do	do	do	N.
Belle Vernon Dist'g Co.	8	D, W	do	do	do	N.
Weideman & Co	8	T, W	do	do	do	N.
Weideman, Holmes & Co.	8	D, T, W	do	do	do	N.
S. N. Weil Dist'g Co	8	D, T, W	do	do	do	N.
Wendelin, Meyer & Sons.	8	T, W	do	do	do	N.
Ferd. Westheimer & Sons.	8	D, T, W	do	do	do	N.
M. Wolstein	8	T	do	do	do	N.
Wood & Lee	8	T	do	do	do	N.
Ashbrook Brothers* (N. F.).	9	D, T, E, W	do	do	do	N.
Dorsel & Wulftange*	10	T, W	do	Covington	Kenton	N.
Durham Dist'g Co	10	T, W	do	do	do	N.
Oakwood Dist'g Co	10	T, W	do	do	do	N.
The New England Dist'g Co.*	11	D, T, W	do	do	do	N.
O. D. Clark & Co	12	T	do	Williamstown	Grant	N.
McDonald & Holt*	14	D, T, W	do	Falmouth	Pendleton	N.
Redmond Dist'g Co.*	15	T, E, W	do	Cynthiana	Harrison	N.
The Boyers Distilling Co.*	16	D, T, W	do	Connersville	do	N.
Edgewood Dist'g Co.	17	D, W	do	Berry	do	N.
F. G. Craig*	17	D, T, E, W	do	do	do	N.
A. P. McClanahan*	18	D, T, W	do	Berlin	Bracken	N.
Sharpe Distilling Co*	19	D, T, W	do	Lair	do	N.
Perry Ducker*	22	T, W	do	Butler	Pendleton	N.
Old Dexter Dist'g Co.	22	D, T, W	do	do	do	N.
Robert Lilley	26	T	do	Oddville	Harrison	N.
O. W. Cowles*	30	D, T, W	do	Butler	Pendleton	N.
Perry Ducker	31	T, W	do	do	do	N.
J. Ducker & Son*	31	D, T, W	do	do	do	N.
G. W. Robson, jr., & Co.*	33	D, T, W	do	Finchtown	Campbell	N.
L. A. Rhomberg	33	D, T, W	do	do	do	N.
Hoftheimer Brothers.	33	D, T, E, W	do	do	do	N.
Mihalovitch, Fletcher & Co.	33	T	do	do	do	N.
Idlewild Dist. Co	33	D, T, W	do	do	do	N.
The Old 76 Dist'g Co.	33	D, T, E, W	do	do	do	N.
The Robson & Stegeman Distilling Co.	33	T	do	do	do	N.
J. H. Stegeman	33	D, T, W	do	do	do	N.
Star Distillery Co	33	D, T	do	do	do	N.
John A. Scott & Co	33	T	do	do	do	N.
Louis Taussig & Co	33	D, T, W	do	do	do	N.
The Union Dist'g Co	33	D, T, W	do	do	do	N.
White Mills Distillery Company.	33	D, T, E, W	do	do	do	N.
Grogan Bros	35	D, W	do	Cynthiana	Harrison	N.
F. S. Ashbrook & Co.*	35	D, T, W	do	do	do	N.
T. J. Megibbon & Bro.*	38	D, T, E, W	do	Lair	do	N.
Cold Spring Dist'y Co	63	T	do	Milton	Trimble	N.
Richwood Dist'y Co	63	D, T, E, W	do	do	do	N.
Lilienthal & Co	63	D, W	do	do	do	N.
Susquehanna Dist'g Co.	63	D, W	do	do	do	N.
Loeb, Bloom & Co	63	D, W	do	do	do	N.
Wm. Tarr Co.*	1	D, W	Seventh	Lexington	Fayette	C.
Wm. Tarr & Co	1	T, E, W	do	do	do	C.
Derby & Day	1	T, W	do	do	do	C.
E. H. Taylor, jr., Co.*	2	T	do	Frankfort	Franklin	N.
Geo. T. Stagg,* doing business as E. H. Taylor, jr., Co.	2	D, T, E, W	do	do	do	C.

F DISTILLERS AND LOCATION OF DISTILLERY WAREHOUSES IN WHIC SPIRITS WERE HELD ON DEPOSIT, ETC.—Continued.

KENTUCKY—Continued.

Distiller.	Distillery number and transaction.		District.	Post-office or town.	County.	Section of
	2		3	4	5	6
gg, doing as The Whisky	2	T, E	Seventh	Frankfort	Franklin	C.
*	3	D, T, W	do	Maysville	Mason	NI
s & Co.*	4	T, E, W	do	Frankfort	Franklin†	N.
es & Co.	4	D, T, E, W	do	do	do	N.
Pepper &	5	D, T, E, W	do	Lexington	Fayette	C.
thers*	6	D, T, W	do	Maysville	Mason	NI
anm*	9	D, T, E, W	do	Midway	Woodford	C.
baum, as Distil- any.	9	D, T, W	do	do	do	C.
baum, as ler.	9	W	do	do	do	C.
baum, as Distil- any.	9	D, T, W	do	do	do	C.
baum, as r & Ta-	9	T, W	do	do	do	C.
baum, as urch.	9	W	do	do	do	C.
baum, as eiling.	9	T, W	do	do	do	C.
baum, as ne.	9	T, W	do	do	do	C.
baum, as Distill- any.	9	T, W	do	do	do	C.
baum, as Bros.	9	D, W	do	do	do	C.
baum, as Einsteine	9	D, W	do	do	do	C.
baum, as ner & Co.	9	D, W	do	do	do	C.
baum, as th.	9	D, T, W	do	do	do	C.
baum, as & Co.	9	D, W	do	do	do	C.
baum, as ist. Co.	9	D, W	do	do	do	C.
baum, as & Co.	9	D, W	do	do	do	C.
baum, as n & Son.	9	D, W	do	do	do	C.
ren	10	T, E, W	do	Paris	Bourbon	C.
. S. Stoll, onwealth	12	T, W	do	Lexington	Fayette	C.
. S. Stoll, Common- ist'y Co.	12	T, W	do	do	do	C.
ll and I. as Durham	12	T, W	do	do	do	C.
ll and I. as Durham Company.	12	T, W	do	do	do	C.
l and I. as Edge- stillery.	12	W	do	do	do	C.
ll and I. as Oak- stillery Co.	12	T, W	do	do	do	C.
ll and I. as Owl tillery.	12	T, W	do	do	do	C.

NAMES OF DISTILLERS AND LOCATION OF DISTILLERY WAREHOUSES IN WHICH SPIRITS WERE HELD ON DEPOSIT, ETC.—Continued.

KENTUCKY—Continued.

Name of distiller.	Distillery number and transaction.		District.	Post-office or town.	County.
1	2		3	4	5
R. P. Stoll and I. Strauss, as Stoll, Hamilton & Co.	12	T, W	Seventh	Lexington	Fayette
R. P. Stoll and I. Strauss, as Small Grain Distillery.	12	T, W	do	do	do
R. P. Stoll* doing business as Edge Cliff Dist. Co.	12	D, W	do	do	do
R. P. Stoll doing business as Owl Club Dist. Co.	12	D, W	do	do	do
R. P. Stoll doing business as Bon. Baer.	12	D, W	do	do	do
R. P. Stoll as Edgewood Distillery.	12	D, W	do	do	do
R. P. Stoll and I Strauss as Lynwood Distillery.	12	D, T, W	do	do	do
R. P. Stoll as Commonwealth Dis'y.	12	D, T, W	do	do	do
R. P. Stoll as Durham Distillery.	12	D, T, W	do	do	do
R. P. Stoll as Fechheimer Brothers.	12	D, T, W	do	do	do
R. P. Stoll as W. W. Johnson & Co.	12	D, W, T	do	do	do
R. P. Stoll as Lynwood Dist'y Co.		D, T, W	do	do	do
R. P. Stoll as Oakwood Distillery Co.	12	D, T, W	do	do	do
R. P. Stoll as Stoll, Hamilton & Co.	12	D, T, W	do	do	do
R. P. Stoll as Small Grain Distillery.	12	D, T, W	do	do	do
R. P. Stoll as Stoll, Vannatta & Co.	12	D, T, W	do	do	do
G. G. White & Co.*	14	T, E, W	do	Paris	Bourbon
G. G. White Company	14	D, T, E, W	do	do	do
Kemplin & Co	15	T	do	Grassy Creek	Morgan
J. M. Cole	16	D, T	do	Maribe	Menifee
E. H. Taylor, jr., & Sons.	17	T, W	do	Mount Sterling	Montgomery
Champe Farrow*	21	D, T, W	do	Mount Gilead	Mason
Teager & Co	23	T, W	do	Tolesborough	Lewis
J. H. Rogers*	24	D, T, W	do	Maysville	Mason
Hunter & Stickrod	29	T	do	Blue Lick Springs	Nicholas
Boggs & Edwards*	30	D, T, W	do	Blaine	Lawrence
J. & F. Laval*	33	D, T, W	do	Versailles	Woodford
John Cochran & Co.*	37	T, D, E, W	do	Frankfort	Franklin
John Cochran & Co. as J. M. Johnson & Co.	37	T, W	do	do	do
John Cochran & Co. as L. & A. Scharff.	37	W	do	do	do
A. J. Webb*	43	D, T, W	do	Ollioville	Lawrence
N. Harris*	46	D, T, W	do	Yarnallton	Fayette
Sellers & Howard*	49	T, W	do	Mortonsville	Woodford
Labrot & Graham*	52	D, T, W	do	Frankfort	Franklin†
J. S. Taylor	53	T, E, W	do	do	do†
J. S. Taylor as Hasterlick Bros.	53	D, W	do	do	do†
J. S. Taylor as L. Sonnenschein.	53	D, W	do	do	do†
J. S. Taylor as J. E. Fitzgerald Distillery Company.	53	D, T, W	do	do	do†
J. S. Taylor, as E. H. Taylor, jr.	53	D, T, W	do	do	do
Headley & Peck*	54	T, D, E, W	do	Lexington	Fayette

† Distillery located in Woodford County.

NAMES OF DISTILLERS AND LOCATION OF DISTILLERY WAREHOUSES IN WHICH SPIRITS WERE HELD ON DEPOSIT, ETC.—Continued.

KENTUCKY—Continued.

Name of distiller.	Distillery number and transaction.		District.	Post-office or town.	County.	Section of State.
1	2		3	4	5	6
J. J. Chambers*	72	D, T, W	Seventh	Cornwall	Menifee†	E.
N. J. Walsh*	77	T, W	do	Paris	Bourbon	N.
N. J. Walsh as Paris Distilling Co.	77	D, T, W	do	do	do	N.
N. J. Walsh as G. & B. Gordes.	77	W	do	do	do	N.
J. A. Grimes*	79	D, T, W	do	Millersburgh	do	N.
R. B. Gambill	81	D, T, W	do	Blaine	Lawrence	NE.
W. H. Thomas	84	T	do	Paris	Bourbon	N.
Thompson Bros. & Co	86	D, T, W	do	Webbville	Lawrence	NE.
J. K. Marshall*	88	D, T, W	do	Sadieville	Scott	N.
J. & J. M. Saffell*	91	D, T, W	do	Frankfort	Franklin	N.
J. N. Blakemore*	96	D, T, E, W	do	Farmdale	do	N.
J. R. Conn*	101	D, T, W	do	Limestone	Elliot	NE.
Mullins & Crigler*	105	D, W	do	Stamping Ground	Scott	N.
L. N. Crigler	105	T, W	do	do	do	N.
W. A. Gaines & Co.*	106	T, E, W	do	Frankfort	Franklin†	N.
W. A. Gaines & Co. (inc.)*	106	D, T, W	do	do	do†	N.
Croft & Maggard*	107	D, T, W	do	Stamping Ground	Scott	N.
James M. Reed*	109	D, T, W	do	White Oak	Morgan	E.
Benj. F. Webb	110	D, T, W	do	Webbville	Lawrence	NE.
G. T. Stagg doing business as E. H. Taylor & Co.	113	D, W	do	Frankfort	Franklin	N.
E. H. Taylor & Co.	113	T. E. W	do	do	do	N.
Lykens & Lovely*	120	D, T, W	do	Caney	Morgan	E.
Linsay & McCuddy*	136	D, T, W	do	Bakerville	Clark	C.
J. W. Prater	144	T	do	Caney	Morgan	E.
R. H. Risk*	149	D, T, W	do	Long Lick	Scott	N.
Joshua Barton	160	D, T	do	Millersburgh	Bourbon	N.
W. W. Green	220	D, T, W	do	Brutin	Elliott	NE.
Burnam, Bennett & Co.*	1	D, T, E, W	Eighth	Silver Creek	Madison	C.
Burnam, Bennett & Co. "T. S. B."	1	T, W	do	do	do	C.
W. H. Albright	2	T, W	do	Round Stone	Rock Castle	C.
C. H. Graves & Sons	3	D, T, W	do	Camp Nelson	Jessamine	C.
R. J. Curley & Co.*	3	D, T, E, W	do	do	do	C.
Adams, Taylor & Co.	3	T, W	do	do	do	C.
Queen of Ky. Dist'y Co.	3	T, W	do	do	do	C.
T. K. Setwell & Co.	3	W	do	do	do	C.
Ed. Hefferman	3	W	do	do	do	C.
Geo. F. Hewett	3	W	do	do	do	C.
H. Bosworth & Son	3	D, T, W	do	do	do	C.
Wm. Berkele*	4	D, T, E, W	do	Danville	Boyle	C.
E. H. Chase & Co. "W. B."	4	D, T, W	do	do	do	C.
E. H. Chase & Co	4	T	do	do	do	C.
H. Rosenthal & Sons "W. B."	4	D, W	do	do	do	C.
J. A. Huguely*	6	T, E, W	do	Bergen	Mercer	C.
E. J. Curley*	15	D, T, E, W	do	Camp Nelson	Jessamine	C.
Edward Hefferman	15	W	do	do	do	C.
Geo. F. Hewitt	15	W	do	do	do	C.
John Miller & Co.	15	T, W	do	do	do	C.
Adams, Taylor & Co.	15	T, W	do	do	do	C.
Wm. Bergenthal & Co. "E. J. C."	15	D, W	do	do	do	C.
C. M. Dedman*	16	T, E, W	do	Oregon	Mercer	C.
J. & T. I. Herring*	17	T, W	do	Lancaster	Garrard	C.
M. T. Mitchell*	18	T, W	do	Bergen	Mercer	C
S. J. Greenbaum	61	T, E	do	Ambrose	Jessamine	C
John R. Thompson*	63	D, T, E, M, W	do	Harrodsburgh	Mercer	C
Thomas & Royston, "J. R. T."	63	D, W	do	do	do	C.
R. R. Jones*	67	D, T, W	do	Monticello	Wayne	S.
A. & W. H. Traylor*	76	T	do	Stanford	Lincoln	C.

† Distillery located in Woodford County.
‡ Distillery located at Chamber's Station.

NAMES OF DISTILLERS AND LOCATION OF DISTILLERY WAREHOUSES IN WHICH SPIRITS WERE HELD ON DEPOSIT, ETC.—Continued.

KENTUCKY—Continued.

Name of distiller.	Distillery number and transaction.		District.	Post-office or town.	County.	Section of State.
1	2		3	4	5	6
Paxton Bros. & Co. "W. H. T."	76	D, T, W	Eighth	Stanford	Lincoln	C.
J. H. Hutchins	81	T	do	Crab Orchard	do	C.
D. A. Aiken Dist'g Co.	86	T	do	Nicholasville	Jessamine	C.
Old Lexington Club Distilling Co.	86	T, E, W	do	do	do	C.
J. Vanarsdell	118	T, W	do	McAfee	Mercer	C.
The Jackson Vanarsdell Dist'g Co.*	118	D, W	do	do	do	C.
Moore & Rebstock	148	T, E, W	do	Bergen	do	C.
D. L. Moore	148	T, W	do	do	do	C.
Moore & Rebstock Dowling Bros.	148	D, W	do	do	do	C.
D. L. Moore as Dowling Bros.	148	D, W	do	do	do	C.
W. R. Mock, jr.*	158	D, T, W	do	Danville	Boyle	C.
Shelby Jett*	384	D, T, W	do	Doylesville	Madison	C.
Harris Thorpe*	389	T, W	do	Waco	do	C.
L. W. Cox*	392	D, T, W	do	Barbourville	Knox	SE.
E. & E. Million*	397	D, T, W	do	White Hall	Madison	C.
Snow & Hunter	405	T	do	Cumberland City	Clinton	S.
H. H. Snow*	405	D, T, W	do	do	do	S.
John A. Wise & Son*	406	D, T, W	do	Irvine	Estill	C.
Reynolds & Wilson*.	409	D, T, W	do	Booneville	Owsley	E.
A. Drake*	415	D, T, W	do	Campton	Wolfe	E.
Combest & Jasper*	416	D, T, W	do	Fawbush	Pulaski	S.
A. Miller*	537	D, T, W	do	Monticello	Wayne	S.
E. Reynolds	540	T, W	do	Union Hall	Estill	C.
G. & B. Gerdes	541	T	do	Silver Creek	Madison	C.
Lynwood Dist'g Co. "W. S. H."	541	T, W	do	do	do	C.
W. S. Hume & Co. "S B H."	541	D, T, W	do	do	do	C.
W. S. Hume & Co.*	541	T, W	do	do	do	C.
Lynwood Dist'g Co. "S. B. H."	541	D, W	do	do	do	C.
Kingston Dist'g Co.*	551	D, T, W	do	do	do	C.
Barlow & Stone*	552	D, T, W	do	Lancaster	Garrard	C.
J. W. Miller & Co.*	554	D, T, W	do	do	do	C.
F. Benge*	685	D, T, W	do	Benge	Clay	SE.
J. C. Tye*	746	D, T, W	do	Lot	Whitley	SE.
H. B. Robinson*	802	D, T, W	do	Richmond	Madison	C.
R. C. Kennon & Son*	805	D, T, W	do	Vaughn's Mill	Estill	C.
J. H. Brown*	809	D, T, W	do	Stillwater	Wolfe	E.
Garrett & Shaw	811	D, T, W	do	Richmond	Madison	C.
H. G. Bobbitt*	874	D, T, W	do	Valley Oak	Pulaski	S.
John Riddle*	877	T	do	Woodstock	do	S.
G. & B. Gerdes	880	T, W	do	Buckeye	Garrard	C.
Calvin East*	880	D, T, W	do	do	do	C.
S. P. & W. H. Floyd	953	T	do	Somerset	Pulaski	S.
C. Simpson*	953	D, T, W	do	do	do	S.
D. J. Hudson*	954	D, T, W	do	do	do	S.
Tarter & Norfleet	965	T	do	Faubush	do	S.
Roberts & Dickerson*	968	D, T, W	do	Proctor	Lee	E.
Crickmore & Asbury*	971	D, T, W	do	Kingston	Madison	C.
S. B. Kelly*	975	D, T, W	do	Locust Branch	Estill	C.
W. H. Spainhower	978	T, W	do	Richmond	Madison	C.
O. Roberts*	980	D, T, W	do	Jackson	Breathitt	E.
Gilbert & Gilbert*	983	D, T, W	do	Crane Nest	Knox	SE.
F. M. Collins	985	T	do	Station Camp	Estill	C.
W. H. Crawford*	1046	T, W	do	Whynot	Lee	E.
A. H. Norton	1049	T	do	Miller's Creek	Estill	C.
Dickerson & Ponder*	1067	D, T, W	do	Lewellen	Lee	E.
D. P. Bethurum*	1068	D, T, W	do	Mount Vernon	Rockcastle	S.
J. C. Taylor*	1070	T, W	do	Trimble	Pulaski	S.
J. A. Watkins*	1072	T, W	do	Callaway	Bell	SE.
B. C. Neal*	1073	D, T, W	do	Miller's Creek	Estill	C.
H. C. Rice	1074	T	do	Irvine	do	C.
T. H. Barker	1074	D, T, W	do	do	do	C.
Geo. W. Gray*	1141	T, W	do	Ambrose	Jessamine	C.
G. J. Marcum*	1150	D T, W	do	Mill Springs	Wayne	S.

S OF DISTILLERS AND LOCATION OF DISTILLERY WAREHOUSES IN WHICH SPIRITS WERE HELD ON DEPOSIT, ETC.—Continued.

KENTUCKY—Continued.

ie of distiller.	Distillery number and transaction.		District.	Post-office or town.	County.	Section of State.
1	2		3	4	5	6
Pryse & Co.*	1164	T, W	Eighth	Beattyville	Lee	E.
Vest	1165	T	do	Miller's Creek	Estill	C.
Clark	1167	T	do	Goochland	Rockcastle	C.
ar & Beams	1169	T	do	Barboursville	Knox	SE.
Denney*	1170	D, T, W	do	Level Green	Rockcastle	C.
Young & Co.*	1173	W	do	McWhorter	Laurel	SE.
n Woodson	1174	T	do	Bronston	Pulaski	S.
Norfleet*	1175	D, T, W	do	Faubush	do	S.
ton Herd	1176	T	do	Traveller's Rest	Owsley	E.
& Short	1180	W	do	London	Laurel	SE.
Spencer*	1181	D, W	do	Campton	Wolfe	E.
. Elliott*	1192	D, T, W	do	Tuttle	Laurel	SE.
W. H. Floyd	1194	T	do	Somerset	Pulaski	S.
& Hall	1210	W	do	do	do	S.
& Roberts*	1212	D, T, W	do	Benge	Laurel	SE.
Acton*	1213	D, T, W	do	Woodstock	Pulaski	C.
Campbell & Co.*	1214	T	do	Cain's Store	do	C.
Campbell*	1214	D, T, W	do	do	do	C.
Tutt*	1215	D, T, W	do	Campton	Wolfe	E.
& Son*	1217	D, T, W	do	Miller's Creek	Estill	C.
Newell*	1300	D, T, W	do	Somerset	Pulaski	C.
F. M. Brown*	1301	D, T, W	do	Bronston	do	C.
Norfleet*	1302	D, T, W	do	Faubush	do	C.
Adams*	1303	D, T, W	do	Science Hill	do	C.
Warren*	1304	D, T, W	do	Bee Lick	do	C.
Mackey*	1305	D, T, W	do	Miller's Creek	Estill	C.
M. Bowman*	1306	D, T, W	do	Waco	Madison	C.
Thomas*	1307	D, T, W	do	Faubush	Pulaski	C.
Tartar*	1308	D, T, W	do	do	do	C.
Vireman	1310	D, T, W	do	Gypsy	Magoffin	E.
ech & Co.*	1311	D, T, W	do	Campton	Wolfe	E.
Wilson*	1312	D, T, W	do	Lee City	do	E.
Sheridan*	1314	D, T, W	do	Miller's Creek	Estill	C.
Short	1316	D, T, W	do	Crawford	Laurel	SE.
Thompson*	1317	D, T, W	do	Woodstock	Pulaski	C.
ms & Ping*	1318	D, T, W	do	Gladee	do	C.
King & Co.*	1319	D, T, W	do	America	Lee	E.
ord & Wyatt*	1320	D, T, W	do	Miller's Creek	Estill	C.
ackson & Co.*	1321	D, T, W	do	Crockettsville	Breathitt	E.
y Tubbs & Co.*	1322	D, T, W	do	Pulaski	Pulaski	C.
Mayfield*	1323	D, T, W	do	do	do	C.
Rice*	1324	D, T, W	do	Bluebank	Estill	C.
Simms*	1326	D, T, W	do	Kingsville	Lincoln	C.
F. Walters	1327	D, T, W	do	Red River Iron Works.	Estill	C.
Spainhower*	1328	D, T, W	do	Richmond	Madison	C.
Higginbotham	1329	D, T, W	do	Wallaceton	do	C.

MARYLAND.

chton & Co.*	1	D, T, S, E, W.	Maryland	Baltimore	Baltimore	N.
herwood Distg.	2	D, T, E, W	do	Cockeysville	do	N.
Hannis Distg.	3	D, T, E, W	do	Baltimore	do	N.
G. King*	4	D, T, W	do	Clarksburgh	Montgomery	C.
le Dist'g Co.*	5	D, T, E, W	do	Melvale	Baltimore	N.
Walters & Co.	6	T, S, E, W	do	Canton	do	N.
Walters & Co.,	6	D, T, S, W	do	do	do	N.
Walker*	7	D, T, W	do	Williamsport	Washington	NW.
Nunsmaker*	8	T	do	Grimes	do	NW.
Reiff*	9	D, T, W	do	Reiffs	do	NW.
Himmler	10	T, W	do	Cumberland	Allegany	NW.
W. Cable*	11	D, T, W	do	Smithsburgh	Washington	NW.
t Stewart*	12	D, T, W	do	Highlandtown	Baltimore	N.
Wishard*	13	D, T, W	do	Leitersburgh	Washington	NW.
Ahalt*	14	D, T, W	do	Burkittsville	Frederick	N.
Gambrill*	15	D, T, W	do	Breathedsville	Washington	NW.

NAMES OF DISTILLERS AND LOCATION OF DISTILLERY WAREHOUSES IN WHICH SPIRITS WERE HELD ON DEPOSIT, ETC.—Continued.

MARYLAND—Continued.

Name of distiller.	Distillery number and transaction.		District.	Post-office or town.	County.	Section of State.
1	2		3	4	5	6
J. B. Gunning*	16	D, T, W	Maryland	Brady	Frederick	N.
O. Horsey*	17	D, T, W	do	Burkittsville	do	N.
Levi Price*	18	D, T, W	do	Hyattstown	Montgomery	C.
M. J. Miller*	19	D, T, W	do	Accident	Garrett	NW.
James Clark*	20	D, T, W	do	Cumberland	Allegany	NW.
John T. Cretin*	22	D, T, W	do	Mount St. Mary's	Frederick	N.
Keefer Bros.*	23	D, T, W	do	Indian Springs	Washington	NW.
Rock Forge Dist'g Co.	24	T	do	Leitersburgh	do	NW.
The Rock Forge Dist'g Co.*	24	D, T, W	do	do	do	NW.
L. Winand & Bro.*	25	D, T, W	do	Scott's Level	Baltimore	N.
Adam Rohrbach*	26	D, T, W	do	Lineborough	Carroll	N.

MASSACHUSETTS.

A. & G. J. Caldwell*	1	D, T, W	Third	Newburyport	Essex	NE.
Nahum Chapin*	2	D, T, E, W	do	Charlestown	Suffolk	E.
Daniel E. Chase & Co.*	3	D, T, E, W	do	Somerville	Middlesex	E.
Sortwell & Co.*	4	D, T, E, W	do	Cambridge	do	E.
D. Lawrence & Sons*	5	D, T, W	do	Medford	do	E.
C. W. Howland	6	D, T, W	do	Everett	do	E.
The H. Porter Co.*	7	D, T, W	do	Agawam	Hampden	W.
C. Edward French*	8	D, T, W	do	Boston	Suffolk	E.
Felton & Son*	9	D, T, E, W	do	South Boston	do	E.

MISSOURI.

Joseph Snyder*	1	D, T, W	First	Ashton	Clark	NE.
Teuscher Digt'y Co.	2	T, W	do	St. Louis	St. Louis	E.
Missouri Dist'g Co.*	3	D, T, S, E, W	do	do	do	E.
James H. Smiley*	4	D, T, W	do	Trace Creek	Madison	SE.
Rock Springs Dist'y	5	W	do	St. Louis	St. Louis	SE.
John Seabaugh*	6	D, T, W	do	Sedgewickville	Bollinger	SE.
David Crites, jr.*	8	D, T, W	do	Daisy	Cape Girardeau	SE.
R. C. Bohlcke*	9	D, W	do	Bernie	Stoddard	SE.
Smith & Bohlcke	9	D, T	do	Dexter	do	SE.
Renaud & Statler*	10	D, T, W	do	Lithium	Perry	E.
R. T. Grisham*	11	D, T, W	do	Yancy Mills	Phelps	C.
L. M. Wills*	12	T, W	do	Sedgewickville	Bollinger	SE.
Jos. Jeffers & Co.	14	T	do	Thayer	Oregon	S.
Mark Jackman*	15	D, T, W	do	Jackman Mills	Howard	C.
P. D. Whitener*	16	D, T, W	do	Castor	Bollinger	SE.
Hahn & Bollinger*	17	D, T, W	do	Fredericktown	Madison	SE.
H. Crites*	30	D, T, W	do	Kurreville	Cape Girardeau	SE.
F. M. Hutchison*	1	D, T, W	Sixth	Missouri City	Clay	NW.
Joseph Harper*	3	D, T, W	do	Bower's Mills	Lawrence	SW.
D. Holladay*	8	D, T, W	do	Weston	Platte	NW.
Blankenship & Wilson.*	11	T, W	do	Houston	Texas	S.
The Rich Hill Dist'g Co.*	28	T	do	Rich Hill	Bates	W.
T. N. Lofton*	29	D, T, W	do	Waco	Jasper	SW.
G. M. Wrightman*	35	T, W	do	Walnut Grove	Greene	S.
J. C. Bohannan	37	T	do	Dry Glaize	Laclede	S.
R. C. Mayes	40	T	do	Bonanza	Caldwell	NW.
Mayes & Hardy*	40	D, T, W	do	do	do	NW.
Redmond Bros.	42	D, T	do	Henderson	Webster	S.
Thornton Dist'g Co.*	49	D, W	do	Thornton	Clay	NW.
G. W. Johnson	58	D, T, W	do	Union Mills	Platte	NW.
G. H. Shawhan*	59	T, W	do	Lone Jack	Jackson	W.
Rhoton & Lang*	61	D, T, W	do	Bakersfield	Ozark	S.
Mitchell & Mitchell	75	D, T, W	do	Cave Spring	Stone	S.
J. T. Nelson	75	D, T, W	do	do	do	S.
J. V. Mitchell	75	D, W	do	do	do	S

ISTILLERS AND LOCATION OF DISTILLERY WAREHOUSES IN WHICH SPIRITS WERE HELD ON DEPOSIT, ETC.—Continued.

MISSOURI—Continued.

ller.	Distillery number and transaction.		District.	Post-office or town.	County.	Section of State.
	2		3	4	5	6
'yCo*	83	D, T, W	Sixth	Waldron	Platte	NW.
	95	D, T, W	do	Saratoga	McDonald	SW.
t'g Co	96	T, W	do	Kansas City	Jackson	W.
o.*	96	D, T, E, W	do	do	do	W.
	97	D, T, W	do	Liberty	Clay	NW.

MINNESOTA.

o.*	1	D, T, E, W	Minnesota	South St. Paul	Dakota	E.
ls f'g	2	D, T, W	do	Minneapolis	Hennepin	C.

NEBRASKA.

Dist'g	1	D, T, W, S, E	Nebraska	Omaha	Douglas	E.
Co	2	T	do	Nebraska City	Otoe	E.
	3	T, W	do	Deer Creek	Madison	N.
	3	T, W	do	do	do	N.

NEW HAMPSHIRE.

	1	D, T, W	New Hampshire.	Portsmouth	Rockingham	SE.

NEW JERSEY.

Co.*	43	D, T, W	Fifth New Jersey.	East Millstone	Somerset	C.

NEW YORK.

o.*	1	D, T, W, E, S.	First	Blissville, L. I.	Queens	SE.
.*	2	T	Twenty-eighth	Buffalo	Erie	W.
	3	D, T, S, W	do	do	do	W.

NORTH CAROLINA.

*	3	T	Fourth	Washington	Beaufort	E.
	4	D, T, W	do	La Grange	Lenoir	E.
	9	T, W	do	Pantego	Beaufort	E.
	12	D, T, W	do	Kenansville	Duplin	SE.
	155	T	do	Eagle Rock	Wake	C.
	169	T	do	Burlington	Alamance	N.
	279	D, T, W	do	Rock Creek	do	N.
	513	D, T, W	do	Oak Ridge	Guilford	N.
	623	D, T, W	do	Blue Wing	Granville	N.
	704	D, T, W	do	Hillsborough	Orange	N.
	741	D, T, W	do	Lamont	Guilford	N.
	744	T	do	Company's Shops	Alamance	N.
	924	T, W	do	Jonesborough	Moore	C.
	1197	T	do	Manly	do	C.
	1269	W	do	Adelaide	Rockingham	N.

NAMES OF DISTILLERS AND LOCATION OF DISTILLERY WAREHOUSES IN WHICH SPIRITS WERE HELD ON DEPOSIT, ETC.—Continued.

NORTH CAROLINA—Continued.

Name of distiller.	Distillery number and transaction.		District.	Post-office or town.	County.	Section of State.
1	2		3	4	5	6
W. Coble	1234	D, T, W	Fourth	Julian	Guilford	N.
Holt & Wilson	1345	T, W	do	Loy's Shops	Alamance	N.
J. C. Foust*	1355	D, T, W	do	Liberty	Randolph	C.
J. B. Gerringer*	1365	D, T, W	do	Gibsonville	Guilford	N.
Cox & Craven	1366	T	do	Cheeks	Randolph	C.
A. H. Garrett	1368	T	do	Simpson's Store	Rockingham	N.
R. Morgan*	1427	D, T, W	do	Selma	Johnston	C.
D. E. Wagoner*	1428	D, T	do	Archer Lodge	do	C.
J. H. Harris*	1429	D, T, W	do	Franklinton	Franklin	N.
R. Honeycutt	1464	T, W	do	Bismarck	Johnston	C.
J. Gerringer	1480	W	do	Gibsonville	Guilford	N.
I. Turner*	1487	D, T, W	do	Hillsborough	Orange	N.
J. McAuley	1488	T, W	do	University Station.	Durham	N.
J. E. Spier*	1531	D, T, W	do	Bell's Ferry	Pitt	E.
W. W. Graves	1533	W	do	Elizabeth City	Pasquotank	NE.
W. P. Alley*	1537	D, T, W	do	Franklinton	Franklin	N.
J. H. Royal & Bro	1542	D, T	do	Clinton	Sampson	S.
G. F. Ingle*	1558	D, T, W	do	Gibsonville	Guilford	N.
C. H. McLamb*	1559	D, T, W	do	Bass	Sampson	S.
R. H. Jenks*	1561	D, T, W	do	Apex	Wake	C.
Capps & Co	1565	T, W	do	Dunn	Harnett	N.
J. C. Peace*	1566	D, T, W	do	Reamston	Granville	N.
D. A. Sutton	1616	D, T	do	Gibsonville	Guilford	N.
G. W. Patterson	1854	D, T	do	Rock Creek	Alamance	N.
R. Laws*	1855	D, T, W	do	Hillsborough	Orange	N.
P. H. Simpson	1856	D, T	do	Simpson's Store	Rockingham	N.
R. J. Smith*	1859	D, T, W	do	Julian	Guilford	N.
J. M. Sutton*	1862	D, T, W	do	Gibsonville	do	N.
R. C. Jones	1863	D, T, W	do	Big Rock	Granville	N.
W. A. Jackson*	1993	D, T, W	do	Hillsborough	Orange	N.
S. H. Cates	1994	D, W	do	Hurdle's Mills	Person	N.
Brady, Bray & Co	1996	T	do	Fall Creek	Chatham	C.
J. L. Davis & Bro*	1997	T, W	do	Rise	Moore	C.
P. L. Sellars	2000	T, W	do	Company's Shops	Alamance	N.
D. M. Andrews*	2002	D, T, W	do	Roxborough	Person	N.
J. A. Norwood*	2003	D, T, W	do	Buchanan	Granville	N.
J. P. Smothers	2004	T, W	do	Jobe	Rockingham	N.
O. B. Cates & Bro*	2008	T, W	do	Hillsborough	Orange	N.
Gerringer & Sullivan*	2009	D, T, W	do	Gibsonville	Guilford	N.
A. Toler & Son*	2010	D, T, W	do	Hillsborough	Orange	N.
L. Grimm*	2011	D, T, W	do	Parkewood	Moore	C.
L. C. Chrisman*	2012	D, T, W	do	Company's Shops	Alamance	N.
C. Patrick	2050	D, T	do	Clinton	Sampson	S.
J. A. Cheek*	2051	D, T, W	do	Hillsborough	Orange	N.
J. W. Myrick*	2083	D, T, W	do	Manly	Moore	C.
W. G. Wilson	2084	T	do	Graham	Alamance	N.
W. H. Nowell*	2085	T, W	do	Eagle Rock	Wake	C.
J. M. Davis*	2086	T, W	do	Kinston	Lenoir	E.
M. Sutton*	2087	D, T, W	do	La Grange	do	E.
J. K. Driver	2088	D, T, W	do	do	do	E.
S. P. Kirkpatrick*	2090	T, W	do	Hillsborough	Orange	N.
M. J. Anthony*	2091	D, T, W	do	Burlington	Alamance	N.
S. B. Holt*	2092	D, T, W	do	Graham	do	N.
W. G. Albright	2093	T	do	Burlington	do	N.
W. D. Ritter	2094	W	do	Prosperity	Moore	C.
R. S. Thomas	2095	D, T	do	Reidsville	Rockingham	N.
Cox & Fields	2096	T, W	do	Sanford	Moore	C.
B. H. Yelvington*	2097	D, T	do	Clayton	Johnston	C.
L. A. Carmen*	2098	D, T, W	do	McLeansville	Guilford	N.
J. W. Hicks	2099	D, T, W	do	Hurdle's Mills	Person	N.
T. E. Webb	2100	D, T	do	Bason	Rockingham	N.
C. J. Wariner*	2101	D, T, W	do	Locust Hill	Caswell	N.
J. A. Isley*	2102	T, W	do	Curtis Mills	Alamance	N.
J. D. Haithcock*	2103	D, T, W	do	Tally Ho	Granville	N.
Andrews & McBain*	2104	D, T, W	do	Chester	Chatham	C.
J. S. Jenkins	2105	D, T, W	do	Young's Cross Roads.	Granville	N.
L. G. Sykes*	2106	D, T, W	do	Oaks	Orange	N.
R. H. Walker	2107	D, T, W	do	Liberty Store	Guilford	N.
C. R. Miller	2108	T	do	Caldwell Institute.	Orange	N.

OF DISTILLERS AND LOCATION OF DISTILLERY WAREHOUSES IN WHICH SPIRITS WERE HELD ON DEPOSIT, ETC.—Continued.

NORTH CAROLINA—Continued.

of distiller.	Distillery number and transaction.		District.	Post-office or town.	County.	Section of State.
1	2		3	4	5	6
l	2110	D, W	Fourth	Halloway's	Person	N.
ven	2111	T	do	Chublake	do	N.
oks	2112	D, T, W	do	Roxborough	do	N.
rry*	2113	D, W	do	South Lowell	Orange	N.
wellyn, jr.*	2114	W	do	Stoneville	Rockingham	N.
rner	2115	T	do	Manly	Moore	C.
r*	2116	D, T, W	do	Hillsborough	Orange	N.
gle	2117	D, T, W	do	Yanceyville	Caswell	N.
bright*	2118	D, T, W	do	Gibsonville	Guilford	N.
nett	2119	D, T, W	do	Roxborough	Person	N.
tthews	2121	D, T, W	do	Littleton	Halifax	NE.
rk*	2199	D, T, W	do	St. Lawrence	Chatham	C.
sett*	2200	D, T, W	do	do	do	C.
. Proctor*	2203	D, T, W	do	Durham	Durham	N.
hnson*	2208	D, T, W	do	Dunn	Harnett	C.
ll	2210	D, T, W	do	Earpsborough	Johnston	C.
cutt	2210	D, W	do	do	do	C.
x	2211	D, T, W	do	Columbia Factory	Randolph	C.
Latta*	2212	D, T, W	do	Durham	Durham	N.
rrett*	2213	D, T, W	do	Eagle Rock	Wake	C.
ggoner*	2214	D, T, W	do	Mill Point	Alamance	N.
night*	2215	D, T, W	do	Rocky Springs	Rockingham	N.
se*	2216	D, T, W	do	Newton Grove	Johnston	C.
ddock*	2217	D, W	do	Wentworth	Rockingham	N.
ay*	2218	D, T, W	do	Curtis' Mills	Alamance	N.
. Gates*	2219	D, T, W	do	Timber Lake	Orange	N.
nguin	2221	D, W	do	Tally Ho	Granville	N.
ufield*	2222	D, W	do	Roxborough	Person	N.
ffine*	2223	D, T, W	do	Gibsonville	Alamance	N.
'atlington*	2224	D, W	do	Liberty Stone	Guilford	N.
. Rogers	2225	D, T, W	do	Newport	Carteret	SW.
riner*	2227	D, W	do	Ruffin	Rockingham	N.
	51	D, W	Fifth	Hannersville	Davidson	C.
	51	T	do	Lexington	do	C.
rper	97	D, T, W	do	Lewisville	Forsyth	N.
ecker*	425	D, T, W	do	Lexington	Davidson	C.
llinger	560	D, T	do	Shelby	Cleveland	SW.
ton*	575	D, T	do	Cool Springs	Iredell	W.
imons*	632	D, T, W	do	Zion	Yadkin	NW.
gs*	644	D, T, W	do	Dallas	Gaston	SW.
lard	651	D, T, W	do	Greenloe	McDowell	W.
	665	D, T	do	Smith Grove	Davie	W.
ikle*	795	D, T, W	do	Welcome	Davidson	C.
tzer	989	D, T	do	Fork Church	Davie	W.
goner	995	D, T, W	do	Chestnut Ridge	Yadkin	NW.
& Jones*	996	D, T, W	do	Shelby	Cleveland	SW.
ter*	997	D, T, W	do	Hicksville	Rutherford	SW.
ittington &	1002	D, T, W	do	Reddie's River	Wilkes	NW.
kins	1007	D, T	do	Mount Holly	Gaston	SW.
kins*	1012	D, T, W	do	Grover	Cleveland	SW.
iley*	1013	D, T, W	do	Lexington	Davidson	C.
ine*	1018	D, T, W	do	Newton	Catawba	W.
ewitt*	1168	D, T, W	do	do	do	W.
mith*	1179	D, T, W	do	Salem	Forsyth	N.
yne	1202	T	do	Gastonia	Gaston	SW.
neessa*	1204	D, T, W	do	Morganton	Burke	W.
ipe*	1206	D, T, W	do	Winston	Forsyth	N.
ores*	1209	D, T, W	do	Conrads	Yadkin	NW.
Everhart	1230	D, T	do	Lexington	Davidson	C.
kins*	1232	D, T, W	do	Stanley Creek	Gaston	SW.
burg*	1247	D, T, W	do	High Shoals	do	NW.
lams	1270	D, T	do	Mulberry	Wilkes	NW.
mbright*	1272	D, T, W	do	Grove	Chatham	C.
ow*	1274	T	do	Monroe	Union	S.
tbit*	1276	D, T, W	do	Smith Grove	Davie	W.
yne*	1291	D, T, W	do	Shelby	Cleveland	SW.
ll	1302	T	do	Zimmerman	Wilkes	NW.
ore*	1304	T	do	Bethania	Forsyth	N.
eas*	1319	D, T, W	do	Shore	Yadkin	NW.
lland*	1320	D, T, W	do	Olin	Iredell	W.
lenwider*	1322	D, T, W	do	Salisbury	Rowan	W.

NAMES OF DISTILLERS AND LOCATION OF DISTILLERY WAREHOUSES IN SPIRITS WERE HELD ON DEPOSIT, ETC.—Continued.

NORTH CAROLINA—Continued.

Name of distiller.	Distillery number and transaction.		District.	Post-office or town.	County.
1	2		3	4	5
C. L. McDaniel*	1324	D, T, W	Fifth	Mocksville	Davie
J. A. Blanton*	1327	D, T, W	do	Shelby	Cleveland
J. H. Hobson*	1328	D, T, W	do	Forbush	Yadkin
S. J. Greenwood	1330	T	do	Roaring River	Wilkes
G. H. Renigar	1332	T	do	Shore	Yadkin
S. A. Hill	1333	T	do	Pilot Mountain	Surry
J. C. Phyler*	1345	D, T, W	do	Statesville	Iredell
H. B. Stewart	1349	D, T	do	Hedrick	Alexander
G. W. Smith	1351	D, T	do	Kernersville	Forsyth
Eller and Eller*	1366	D, T, W	do	Grayson	Ashe
J. B. Lanier*	1370	D, T, W	do	Salisbury	Rowan
Z. F. Hinkle*	1371	D, T, W	do	Welcome	Davidson
J. S. Bryant*	1380	D, T, W	do	Jonesville	Yadkin
R. W. Brown*	1382	D, T, W	do	Ashford	McDowell
P. G. Honeycutt	1383	D, T	do	Clingman	Wilkes
L. L. Suggs	1386	D, T, W	do	Dallas	Gaston
F. Wagoner*	1388	D, T, W	do	Longtown	Yadkin
H. C. Eller, jr.*	1390	D, T, W	do	Lewis Fork	Wilkes
N. M. Privitt*	1396	D, T, W	do	Lovelace	do
J. F. L. Tussey*	1486	D, T, W	do	Lexington	Davidson
G. W. Chaffin*	1623	D, T, W	do	Winston	Forsyth
A. Harp	1701	D, T	do	Felix	Davie
S. Triplett	1707	D, T	do	Boomer	Wilkes
S. S. Caldwell*	1717	D, T	do	Miller	Iredell
R. P. Garner	1719	D, T, W	do	Denton	Davidson
J. L. Hays*	1720	D, T, W	do	Purlear	Wilkes
D. Smitherman*	1726	D, T, W	do	East Bend	Yadkin
J. A. Huffman*	1729	D, T, W	do	Purlear	Wilkes
R. M. Jenkins*	1733	D, T, W	do	Mount Holly	Gaston
W. F. Williams*	1734	D, T, W	do	Smith Grove	Davie
J. W. Walker	1736	D, T	do	do	do
I. C. Shores*	1737	D, T, W	do	Tilden	Yadkin
D. Call*	1738	D, T, W	do	Fork Church	Davie
N. H. Robinett*	1746	D, T, W	do	Trap Hill	Wilkes
A. F. Weir*	1748	D, T, W	do	King's Mountain	Cleveland
J. S. Carpenter*	1749	D, T, W	do	Cherryville	Gaston
Z. T. Rutledge	1757	D, T	do	Cross Roads Church.	Yadkin
G. W. Selvey	1760	D, T	do	Montford	McDowell
S. B. Harding	1761	D, W	do	Panther Creek	Yadkin
A. Y. Rash	1763	D, T	do	Osbornville	Wilkes
D. Jenkins*	1768	D, T, W	do	Lowell	Gaston
W. L. Harbin*	1770	D, T, W	do	Statesville	Iredell
J. A. Rhyne	1776	T	do	Gastonia	Gaston
H. Spriukle*	1781	D, T, W	do	Yadkinville	Yadkin
E. Miller*	1788	D, T, W	do	Millertown	Rowan
L. G. Salmons	1792	D, W	do	Brier Creek	Wilkes
J. W. Garrison	1793	D, T, W	do	Morgantown	Burke
F. A. Tucker	1835	D, T	do	Abbott's Creek	Davidson
A. Leonard*	1848	D, T, W	do	Welcome	do
R. B. Jones	1857	T	do	Lexington	do
T. D. Roseman*	2015	D, T, W	do	Salisbury	Rowan
J. A. Hyatt*	2016	D, T, W	do	Cobbs	Cherokee
J. Carson*	2019	W	do	Marion	McDowell
M. C. Bruce*	2023	D, T, W	do	Conrads	Yadkin
G. Steelman*	2024	D, T, W	do	do	do
J. M. Long	2028	T	do	East Bend	do
J. Combs*	2029	D, T	do	Lovelace	Wilkes
I. Shores*	2036	D, T, W	do	Yadkinville	Yadkin
J. W. Smitherman	2039	D, T	do	East Bend	do
J. L Myers	2045	D, T	do	Round Mountain	Wilkes
S. Brown*	2045	D, T	do	do	do
J. C. Tinsley	2050	D, T	do	Mulberry	do
L. C. Myers*	2056	D, T, W	do	Jennings' Mills	Iredell
Z. H. Roberts	2057	D, T	do	Mulberry	Wilkes
J. L. Shoemaker	2058	D, T	do	Evalin	Iredell
S. B. Harding	2066	T	do	Huntsville	Yadkin
J. W. Smitherman	2069	D, T, W	do	East Bend	do
P. L. Hays*	2072	D, T, W	do	Hay Meadow	Wilkes
M. A. Cornwell*	2077	D, T, W	do	Collingville	Polk
J. L. Wood*	2082	D, T, W	do	Pleasant Ridge	Gaston
J. Jenkins*	2093	D, T, W	do	Stanley Creek	do

s of Distillers and Location of Distillery Warehouses in which Spirits were held on Deposit, etc.—Continued.

NORTH CAROLINA—Continued.

e of distiller,	Distillery number and transaction.		District.	Post-office or town.	County.	Section of State.
1	2		3	4	5	6
lenning*	2094	D, T, W	Fifth	Conrads	Yadkin	NW.
Watkins	2096	D, T	do	Wilkesborough	Wilkes	NW.
'orbes*	2097	D, T, W	do	Crowder's Creek	Gaston	SW.
Killy*	2098	D, T, W	do	Reddie's River	Wilkes	NW.
Parker*	2101	D, T, W	do	Camp Call	Cleveland	SW.
Absher*	2102	D, T, W	do	Mulberry	Wilkes	NW.
odenhamer*	2103	D, T, W	do	Jonesville	Yadkin	NW.
ilton*	2104	D, W	do	Advance	Davie	W.
den	2105	T	do	Mount Nebo	Yadkin	NW.
ulk*	2106	D, T, W	do	Dalton	Stokes	N.
'illgard*	2108	D, T, W	do	Cross Roads Church.	Yadkin	NW.
rman*	2109	D, T	do	Hickory	Catawba	W.
troup	2109	D, T	do	do	do	W.
ins	2110	D, T, W	do	Conrads	Yadkin	NW.
ray & Bro	2111	D, T	do	Dellaplane	Wilkes	NW.
Vatts*	2112	D, T, W	do	Stoney Hill	do	NW.
omers*	2114	D, T, W	do	Zimmerman	do	NW.
arrison	2115	T	do	Morganton	Burke	W.
mpson	2116	D, T, W	do	Belo	Surry	NW.
'omlin*	2118	D, T, W	do	Harmony	Iredell	W.
rley	2119	D, T	do	Little Pine Creek	Madison	W.
rman*	2120	D, T, W	do	Hickory	Catawba	W.
troup	2120	D, T	do	do	do	W.
y & Co.*	2121	D, T, W	do	Clingman	Wilkes	NW.
Pope	2122	D, T	do	Hudsonville	Caldwell	W.
lie*	2123	D, T, W	do	Olin	Iredell	W.
Bunker	2124	D, T, W	do	Hay Stack	Surry	NW.
lumgarner	2128	D, T	do	Newton	Catawba	W.
ombs	2129	D, T	do	Osbornville	Wilkes	NW.
elly	2130	T	do	Old Fort	McDowell	W.
mith*	2137	D, T, W	do	King's Mountain	Gaston	SW.
hurch*	2140	D, T, W	do	Ready Branch	Wilkes	NW.
hell*	2141	D, T, W	do	Jenning's Mills	Iredell	W.
prinkle*	2142	D, T	do	Footville	Yadkin	NW.
lie*	2143	D, T	do	Olin	Iredell	W.
enter*	2144	D, T, W	do	Carpenter	Gaston	SW.
appe*	2145	D, T, W	do	Saluda	Polk	SW.
ey	2148	D, T	do	Smith Grove	Davie	W.
& Holland	2149	D, T	do	Houstonville	Iredell	W.
immette*	2152	D, T, W	do	Wiles	Wilkes	NW.
sey*	2154	D, T, W	do	Grover	Cleveland	SW.
Bandy*	2155	D, T	do	Bandy	Catawba	W.
Wells	2155	D, T, W	do	do	do	W.
ummy*	2157	D, T, W	do	Lowesville	Lincoln	SW.
& Sprinkle	2158	T	do	Bethania	Forsyth	N.
ok*	2159	D, T, W	do	Catfish	Catawba	W.
r, Endy & Endy	2162	T	do	Mission	Stanly	C.
onee*	2163	D, T, W	do	Cross Rds. Church	Yadkin	NW.
hurch*	2164	D, T, W	do	Purlear	Wilkes	NW.
ornatzer*	2165	D, T, W	do	Advance	Davie	W.
Shumate*	2169	D, T	do	Mulberry	Wilkes	NW.
Carpenter*	2172	D, T, W	do	Carpenter	Gaston	SW.
olvard & Son	2173	D, T	do	Spillman	Yadkin	NW.
Current	2174	T	do	Harmony	Iredell	W.
Collins	2176	D, T, W	do	Grover	Cleveland	SW.
Bostian	2177	D, T	do	Saw	Rowan	W.
& Hartman	2180	D, T	do	Williamsburgh	Iredell	W.
& Messick	2180	D, T, W	do	do	do	W.
Bailey*	2182	D, T, W	do	Elbaville	Davie	W.
Shore	2184	D, T, W	do	Shore	Yadkin	NW.
Harlow*	2185	D, T	do	Brushy Mountain	Wilkes	NW.
Hofer	2186	T	do	Polycarp	Alexander	W.
man	2188	T	do	Morganton	Burke	W.
& Woodring	2190	D, T, W	do	Zionville	Watauga	NW.
Fisher	2191	T	do	Tryon City	Polk	SW.
Warren	2192	D, T	do	Osbornville	Wilkes	NW.
rren*	2192	D, T, W	do	do	do	NW.
Wagoner	2193	D, T	do	Chestnut Ridge	Burke	W.
dwell & Co.*	2175	D, T, W	do	Lewis Fork	Wilkes	NW.
loninger	2196	D, T	do	Stanley's Creek	Gaston	SW.
tine	2197	D, T	do	do	do	SW.

NAMES OF DISTILLERS AND LOCATION OF DISTILLERY WAREHOUSES SPIRITS WERE HELD ON DEPOSIT, ETC.—Continued.

NORTH CAROLINA—Continued.

Name of distiller.	Distillery number and transaction.		District.	Post-office or town.	Count
1	2		3	4	5
L. F. Sumertin	2198	D, T	Fifth	Grayson	Ashe
J. P. Rausseau*	2199	D, T, W	do	Wilkesborough	Wilkes
W. L. Baker & McLurd.*	2700	D, T, W	do	Hull's Cross Rds.	Lincoln
L. J. Huffstetter*	2701	D, T, W	do	Lincolnton	do
A. A. Dobbins	2702	D, T	do	Olin	Iredell
J. W. McFarland*	2704	D, T, W	do	Poor's Ford	Rutherfo
E. M. Couch*	2708	D, T, W	do	Zion	Yadkin
J. L. Williams, jr.*	2709	D, T, W	do	Spillman	do
W. L. Cornatzer	2710	D, T	do	Fork Church	Davie
H. C. Huffstetter*	2711	D, T, W	do	Pleasant Ridge	Gaston
W. Swicegood	2712	D, T, W	do	Jubilee	Davidson
Richardson & Edward	2713	D, T	do	Edwards Cross Roads.	Alleghan
L. J. Salmons*	2714	D, T, W	do	Brier Creek	Wilkes
W. J. Norton	2715	D, T	do	Taylorsville	Alexande
I. L. Younce*	2716	D, T, W	do	Fair Grove	Davidson
J. S. Russell*	2718	D, T, W	do	Boomer	Wilkes
E. M. Pardew*	2719	D, T, W	do	Round Mountain	do
G. H. Hardin*	2720	D, W	do	Beaver Creek	Ashe
W. S. Turner*	2724	D, T, W	do	River Hill	Iredell
J. L. Allgood*	2725	D, T, W	do	Cross Rds. Church	Yadkin
J. D. Somers	2726	D, W	do	Statesville	Iredell
W. V. Somers & Co	2726	D, T	do	do	do
A. P. Woodruff	2728	D, T	do	Charity	Yadkin
L. E. Davis	2729	D, T	do	Middle Cane	Watauga
L. P. Rudasill	2729	D, W	do	Triplette	do
S. Freeman	2730	D, T	do	Marshall	Madison
T. H. Johnson*	2731	D, T, W	do	Salisburry	Rowan
J. Jenkins	2734	D, T, W	do	Stanley's Creek	Gaston
L. W. Lonsford*	2735	D, T, W	do	Lovelace	Wilkes
J. G. Phillips*	2737	D, T, W	do	Elsie	Mitchell
G. W. Paterson	2740	D, T	do	Concord	Cabarrus
J. J. Barnes	2742	D, T	do	Parks	Wilkes
A. H. Cloninger*	2743	D, T, W	do	Stanley's Creek	Gaston
J. P. Dellinger*	2745	D, T, W	do	Erwinsville	Cleveland
H. C. Douthirt*	2746	D, T, W	do	Brier Creek	Wilkes
T. M. Peoples	2747	D, T	do	Mocksville	Davie
J. T. Harrison & Co.*	2749	D, T, W	do	Salisbury	Rowan
L. W. Dellinger	2750	D, T	do	Cherryville	Gaston
J. Mitchell	2751	D, T, W	do	Jennings' Mills	Iredell
J. E. Marlow*	2752	D, T, W	do	Montford	McDowell
H. H. Stillwell*	2753	D, T, W	do	Cowan's Ford	Mecklenb
James Orrell*	2754	D, T	do	Advance	Davie
J. T. Roberts*	2755	D, T, W	do	Osbornville	Wilkes
F. G. Falls*	2756	D, T, W	do	Pleasant Ridge	do
S. D. Davis	2758	D, T, W	do	East Bend	Yadkin
J. F. Salmon*	2759	D, T, W	do	Osbornville	Wilkes
J. L. Church*	2760	D, T, W	do	Adley	do
J. J. Kincaid*	2761	P, T, W	do	Cleveland	Rowan
D. A. Ramsey	2761	D, T	do	do	do
J. W. Hayne	2762	D, T, W	do	Jonesville	Yadkin
J. H. Greenwood*	2763	D, T, W	do	do	do
H. F. Shore*	2764	D, T, W	do	Shore	do
J. Williams	2765	T	do	Panther Creek	do
J. M. Adkin	2767	D, W	do	Ash Hill	Surry
J. W. Sharpe	2768	D, T, W	do	Old Fort	McDowell
J. A. Huffman*	2769	T, W	do	Purlear	Wilkes
L. R. Foote	2770	D, T, W	do	Nestor	Davie
Wm. Hartenstein*	2773	D, T, W	do	Cooper's	Buncombe
John H. Snow	2774	D, T, W	do	Mount Airy	Surry
J. F. McLain*	2775	D, T, W	do	Grade	Alexande
P. A. Miller*	2777	D, T, W	do	Mocksville	Davie
B. T. Eller	2778	D, T	do	Purlear	Wilkes
B. Hudgins*	2779	D, T, W	do	Black Mountain	Buncombe
D. A. Kauipe*	2780	D, T, W	do	Marion	McDowell
R. V. Swann	2780	D, T	do	do	do
T. G. Falls*	2781	D, T, W	do	Pleasant Ridge	Gaston
G. A. Hartman*	2782	D, T, W	do	Farmington	Davie
J. B. England	2783	T	do	Morganton	Burke
R. C. Setzer	2784	D, T	do	Newton	Catawba
L. A. Yount	2784	D, T, W	do	do	do

ES OF DISTILLERS AND LOCATION OF DISTILLERY WAREHOUSES IN WHICH SPIRITS WERE HELD ON DEPOSIT, ETC.—Continued.

NORTH CAROLINA—Continued.

ame of distiller.	Distillery number and transaction.		District.	Post-office or town.	County.	Section of State.
1	2		3	4	5	6
L. Lineberger*	2785	D, T, W	Fifth	Iron Station	Lincoln	SW.
A. Sprinkle	2786	D, T	do	Footville	Yadkin	NW.
- Kanipe*	2787	D, T, W	do	Marion	McDowell	W.
. Finney*	2788	D, T, W	do	Jonesville	Yadkin	NW.
Williams*	2789	D, T, W	do	Greenlee's	McDowell	W.
. Jimmerson*	2790	D, T, W	do	Rocky Pass	do	W.
. Godfrey*	2793	D, T, W	do	Marion	do	W.
rugg*	2794	D, T, W	do	Sandy Springs	Polk	SW.
Gambill*	2795	D, T, W	do	Grayson	Ashe	NW.
. Shore*	2796	D, T, W	do	Mount Nebo	Yadkin	W.
. Stewart	2797	D, T	do	Hedrick	Alexander	W.
Collins*	2798	D, T, W	do	Grover	Cleveland	SW.
ra'ey*	2800	D, T, W	do	Cool Springs	Iredell	W.
Norton*	2801	D, T, W	do	Garden City	McDowell	W.
Meyers*	2802	D, T, W	do	Dellaplane	Wilkes	NW.
ancannon	2802	T	do	Elk Park	Mitchell	W.
Jenkins*	2803	D, T, W	do	Grover	Cleveland	SW.
. Bailey*	2804	D, T, W	do	Elbaville	Davie	W.
el Howard*	2805	D, T, W	do	Smith Grove	do	W.
. Cornatser	2807	D, T	do	Fork Church	do	W.
Rhyne*	2809	D, T, W	do	Gastonia	Gaston	SW.
L. Carroll*	2810	D, T, W	do	Cherryville	Yadkin	NW.
Dinkins*	2811	D, T, W	do	Yadkinville	do	NW.
. Jimison*	2812	D, T, W	do	Rocky Pass	McDowell	W.
Norman*	2813	D, T, W	do	Lovelace	Wilkes	NW.
Suggs*	2814	D, T, W	do	Dallas	Gaston	SW.
. Triplette & Co.*	2815	D, T, W	do	Elkville	Wilkes	NW.
. Collins*	2817	D, T, W	do	Grover	Cleveland	SW.
Barkley	2818	D, T	do	Statesville	Iredell	W.
. Godby*	2820	D, T, W	do	Callahan	Davie	W.
Todd	2821	D, T, W	do	Cross Rds. Church	Yadkin	NW.
Combs*	2822	B, T	do	Osbornville	Wilkes	NW.
. Barneycastle*	2823	D, T, W	do	Advance	Davie	W.
L. Stockton*	2825	D, T, W	do	Statesvillle	Iredell	W.
. Hays*	2826	D, T, W	do	Hay Meadow	Wilkes	NW.
A. Dobbins*	2827	D, T, W	do	Chestnut Ridge	Yadkin	NW.
. Godfrey*	2828	D, T, W	do	Hamptonville	do	NW.
. Hoke*	2829	D, T, W	do	Waugh	Iredell	W.
Anderson*	2830	D, T, W	do	Callahan	Davie	W.
. Lang	2831	T	do	Chestnut Ridge	Yadkin	NW.
. Calvard	2832	D, T, W	do	Spillman	do	NW.
A. Bailey*	2833	D, T, W	do	Advance	Davie	W.
. Greenwood	2834	T	do	Jonesville	Yadkin	NW.
L. Reavis*	2835	D, T, W	do	Cross Rds Church	do	NW.
L. Figgins*	2836	D, T, W	do	Collinsville	Polk	SW.
. Colvard	2837	D, T, W	do	Spillman	Yadkin	NW.
. Williams*	2838	D, T, W	do	Custer	Rutherford	SW.
L. Parris*	2839	D, T, W	do	Waverly	do	SW.
. Tarbiville*	2840	D, T, W	do	Eagle Mills	Iredell	W.
. Shrum*	2841	D, T, W	do	High Shoal	Gaston	SW.
tor & Hedrick	2842	D, T	do	Hedrick	Alexander	W.
. Whitman*	2843	D, W	do	Panther Creek	Yadkin	NW.
d. Massagee*	2844	D, T, W	do	Reepsville	Lincoln	SW.
C. Myers*	2845	D, T, W	do	Lovelace	Wilkes	NW.
S. Turner*	2846	D, T, W	do	River Hill	Iredell	W.
M. Rhyne	2847	D, T, W	do	Gastonia	Gaston	SW.
. Somers & Co. *	2848	D, T, W	do	Statesville	Iredell	W.
n Bailey*	2849	D, T, W	do	Smith Grove	Davie	W.
. Hoover*	2850	D, T, W	do	Stanley Creek	Gaston	SW.
. Rhyne*	2851	D, T, W	do	Gastonia	do	SW.
W. Long*	2852	D, T, W	do	Longtown	Yadkin	NW.
. Basinger*	2853	D, T, W	do	Pool	Rowan	W.
. Wooley*	2854	D, T, W	do	Cherryville	Gaston	SW.
T. Everhart*	2855	D, T, W	do	Lexington	Davidson	C.
F. Alba*	2856	D, T, W	do	Harmony	Iredell	W.
. Harris*	2858	D, T, W	do	Montford	McDowell	W.
. Vanhoy	2859	D, T, W	do	Hamptonville	Yadkin	NW.
den Eastep*	2860	D, T, W	do	Beach Creek	Watauga	NW.
L. Cornatzer*	2861	D, W	do	Fork Church	Davie	W.
. Flemming*	2862	D, T, W	do	Forbush	Yadkin	NW.
. Carrier*	2863	D, T, W	do	Rutherfordton	Rutherford	SW.
F. Walker*	2865	D, W	do	Smith Grove	Davie	N.

NAMES OF DISTILLERS AND LOCATION OF DISTILLERY WAREHOUSES IN WHICH SPIRITS WERE HELD ON DEPOSIT, ETC.—Continued.

NORTH CAROLINA—Continued.

Name of distiller.	Distillery number and transaction.		District.	Post-office or town.	County.
1	2		3	4	5
G. M. Rhyne*	2866	D, T, W	Fifth	Gastonia	Gaston
Parker & Barnett*	2867	D, T, W	do	Brushy Mountain	Wilkes
M. P. Carlton*	2869	D, T, W	do	Meadow Hill	Caldwell
D. H. Reid	2871	D, T	do	Lexington	Davidson
J. M. Dalton*	2872	D, T, W	do	Franklin	Iredell
J. G. Hege*	2873	D, T	do	Arcadia	do
M. E. Stroup	2874	D, T, W	do	Lowell	Gaston
H. C. Hedgecock*	2875	D, T, W	do	Kernersville	Forsyth
D. E. Orrell*	2876	D, T, W	do	Advance	Davie
D. L. Lowery	2877	D, T	do	County Line	do
B. O. Jenkins	2881	D, T	do	Grover	Cleveland
S. P. Graham	2883	D, T	do	Williamsburgh	Iredell
W. T. Hudson*	2884	D, T, W	do	Morganton	Burke
C. F. Williams*	2888	D, T	do	Otter Creek	Rutherford
S. Angle	2890	D, T	do	Eagle Mills	Iredell
J. T. Goodman	2892	D, T, W	do	Amity Hill	do
J. D. Cowan*	2894	D, T, W	do	Mooresville	do
J. R. Mayberry*	2895	D, T	do	Grade	Alexander
J. L. Hays & Co.*	2899	D, T, W	do	Purlear	Wilkes
C. Myers*	2900	D, W	do	Smith Grove	Davie
Nelson & Winfree*	2901	D, T, W	do	Kernersville	Forsyth
G. W. Marshall*	2902	D, T, W	do	Hamptonville	Yadkin
J. W. Baker*	2903	D, W	do	East Bend	do
J. T. Smith*	2904	D, T, W	do	Rocky Pass	McDowell
W. H. Pack*	2905	D, W	do	Fork Church	Davie
F. C. Ellis*	2906	D, T, W	do	Lewis Forks	Wilkes
H. W. Douglass	2907	D, W	do	Yadkinville	Yadkin
J. H. Elliott*	2908	D, T, W	do	Shelby	Cleveland
J. H. Luing*	2909	D, W	do	Farmington	Davie
J. A. W. Yarborough*	2910	D, T, W	do	Collinsville	Polk
A. C. Davis*	2911	D, T, W	do	Landram	do
D. L. Bowman	2912	D, T, W	do	Polycarp	Alexander
V. A. Long*	2913	D, T, W	do	Yadkinville	Yadkin
W. G. Davis*	2914	D, T, W	do	Charity	do
W. H. Ray*	2915	D, W	do	Elk Park	Mitchell
C. Dalton*	2916	D, T, W	do	Bat Cave	Henderson
J. C. Miller	2917	D, W	do	Meat Camp	Watauga
E. D. Wooten*	2918	D, T	do	Olin	Iredell
R. L. Tomlin*	2919	D, T	do	Williamsburgh	do
J. A. Barclay*	2920	D, W	do	Statesville	do
Giles Hutchens*	2921	D, T, W	do	Cross Rds Church	Yadkin
O. L. Thornburg*	2922	D, T, W	do	Hudson	Caldwell
D. W. Sheets*	2923	D, T	do	Fork Church	Davie
W. R. Carroll*	2924	D, W	do	Cherryville	Gaston
T. D. Green*	2927	D, T	do	Jubilee	Davidson
H. S. King*	2928	D, T, W	do	Clio	Iredell
Pointdexter & Hurt*	2929	D, T, W	do	Richmond Hill	Yadkin
J. P. Dillinger*	2930	D, T, W	do	Evansville	Cleveland
T. F. Baggarly*	2931	D, W	do	Harmony	Iredell
J. F. Steelman*	2932	D, T	do	Nestor	Davie
G. W. Kritesfeazer*	2933	D, T, W	do	Carlisle	Davidson
R. N. Holland*	2934	D, T, W	do	Gastonia	Gaston
C. H. Binkley	2936	D, T, W	do	Shore	Yadkin
W. R. Forbes*	2937	D, W	do	Grover	Cleveland
W. C. Hyde*	2938	D, T, W	do	Wolf Creek	Cherokee
P. A. Davis*	2939	D, T, W	do	Yadkinville	Yadkin
Tucker & Co	2940	D, W	do	Mission	Stanly
T. Greenwood	2942	D, W	do	Lonesville	Yadkin
S. L. Drake	2944	D, W	do	Fork Church	Davie
J. H. Gheen	2945	D, T, W	do	Salisbury	Rowan
G. O. Fulenwider	2946	D, W	do	do	do
W. G. Gilliland	2947	D, W	do	Old Fort	McDowell
W. P. Morrison	2948	D, W	do	Dysortville	do
J. Z. Price	2950	D, W	do	Boomer	Wilkes
J. W. Moody	2952	D, W	do	Grange	Henderson
A. S. Alley*	4004	D, T, W	do	Catawba	Catawba
A. N. Dale	4006	T	do	Chambers	Burke
C. S. Holland*	4007	D, T, W	do	Olin	Iredell
J. S. Higgins*	4008	D, T, W	do	Dysortville	McDowell
J. J. Kennedy*	4009	T	do	King's Mountain	Cleveland
W. Billings	4012	T	do	Trap Hill	Wilkes
W. F. McGuire	4013	D, T	do	Mocksville	Davie

DISTILLERS AND LOCATION OF DISTILLERY WAREHOUSES IN WHICH SPIRITS WERE HELD ON DEPOSIT, ETC.—Continued.

NORTH CAROLINA—Continued.

stiller.	Distillery number and transaction.		District.	Post-office or town.	County.	Section of State.
	2		3	4	5	6
n*	4014	D, T, W	Fifth	Wilkesborough	Wilkes	NW.
	4015	D, T, W	do	Olin	Iredell	W.
ons	4017	D, T	do	Yadkinville	Yadkin	NW.
	4017	T	do	do	do	NW.
	4020	D, T, W	do	Lincolnton	Lincoln	SW.
ll*	4021	D, T, W	do	Salisbury	Rowan	W.
	4022	D, T, W	do	Amity Hill	Iredell	W.
	4025	D, T, W	do	Montford	McDowell	W.
	4026	D, T, W	do	Brevard	Transylvania	SW.
	4027	D, T	do	Jennings' Mills	Iredell	W.
and*	4028	D, T, W	do	Olin	do	W.
	4031	D, T, W	do	Dookery	Wilkes	NW.
	4033	T	do	Mount Holly	Gaston	SW.
y*	4036	D, T, W	do	Morganton	Burke	W.
	4039	D, T	do	Elmwood	Iredell	W.
	4041	W	do	Golden	Rutherford	SW.
	4042	D, T, W	do	Marion	McDowell	W.
	4044	D, T	do	Third Creek	Iredell	W.
*	4046	D, T, W	do	Jonesville	Yadkin	NW.
	4050	D, T	do	Brushy Mountain	Wilkes	NW.
	4051	D, T	do	Jonesville	Yadkin	NW.
n*	4054	D, W, T	do	Ashford	McDowell	W.
ler	4055	D, T	do	Advance	Davie	W.
on*	4058	D, W, T	do	Furches	Ashe	NW.
	4060	D, W, T	do	Hickory	Catawba	W.
	4061	T	do	Bl'k Mountain	Buncombe	W.
	4063	D, T, W	do	Spillman	Yadkin	NW.
	4064	D, T, W	do	Olin	Iredell	W.
*	4067	D, T, W	do	Crowder's Creek	Gaston	SW.
	4070	D, T, W	do	Gastonia	do	SW.
	4071	D, T, W	do	Salisbury	Rowan	W.
	4072	D, T, W	do	Gastonia	Gaston	SW.
	4075	D, T, W	do	Stanley's Creek	do	SW.
	4077	D, T	do	Eagle Mills	Iredell	W.
dt*	4078	D, T	do	Salisbury	Rowan	W.
	4079	D, T	do	Williamsburgh	Iredell	W.
	4080	D, T	do	Cross Rds. Church	Yadkin	NW.
mlin*	4083	D, T, W	do	Olin	Iredell	W.
	4085	D, T, W	do	Marion	McDowell	W.
*	4088	D, T, W	do	Gastonia	Gaston	SW.
	4090	D, T, W	do	Crouse	Lincoln	SW.
*	4092	D, T, W	do	Cross Rds. Church	Yadkin	NW.
	4093	D, T, W	do	Oak Forest	Rowan	W.
	4093	D, T	do	do	Iredell	W.
	4094	D, T, W	do	Olin	do	W.
	4096	D, T, W	do	King's Mountain	Cleveland	SW
	4097	D, T, W	do	Grover	do	SW.
	4098	D, T, W	do	Eagle Mills	Iredell	W.

OREGON.

ey	23	T, W	Oregon	Jacksonville	Jackson	SW.
ist'g Co.	35	D, T, W	do	Uniontown	Whitman, Wash Ter.	E.
t	36	D, T, W	do	Toledo	Lewis, Wash. Ter.	SW.

OHIO.

*	1	D, T, W*	First	Cincinnati	Hamilton	SW
th, as Springs	1	D, T, W	do	do	do	SW.
th, as ros. &	1	D, T, W	do	do	do	SW.
ossom	1	T, W	do	do	do	SW

NAMES OF DISTILLERS AND LOCATION OF DISTILLERY WAREHOUSES IN WHI SPIRITS WERE HELD ON DEPOSIT, ETC.—Continued.

OHIO—Continued.

Name of distiller.	Distillery number and transaction.		District.	Post-office or town.	County.	Section of
1	2		3	4	5	6
The Star Dist'g Co	1	T, W	First	Cincinnati	Hamilton	SW
The Rosewood Dist'g Co.	1	T, W	do	do	do	SW
The Hamilton Dist'g Co.	1	T, W	do	Hamilton	Butler	SW
A. Hoffheimer & Co	3	T, W	do	do	do	SW
G. K. Duckworth	4	T, W	do	Cincinnati	Hamilton	SW
Maddux, Hobart & Co.	5	T, W	do	do	do	SW
The Maddux, Hobart & Co.	5	D, T, W, S	do	do	do	S
Lewis O. Maddux, as Maddux, Hobart & Co.	5	D, T, W, S	do	do	do	S
Lewis O. Maddux, as Hoffheimer Bros.	5	D, T, W	do	do	do	S
Lewis O. Maddux, as John A. Scott & Co.	5	D, T, W	do	do	do	S
Lewis O. Maddux, as Hirsch, Lowenstein & Levi.	5	D, T	do	do	do	S
Lewis O. Maddux, as Star Distillery Co.	5	D, T, W	do	do	do	SW
Lewis O. Maddux, as Kentucky River Dist'g Co.	5	D, T, W	do	do	do	SW
The Mill Creek Dist'g Co.	6	T, W, E	do	do	do	SW
The Storrs Dist'g Co.	6	D, T, W, S	do	do	do	SW.
Oliver L. Perin, as The Stores Dist'g Co.	6	D, T, W	do	do	do	SW.
Oliver L. Perin, as A. B. Cook.	6	D, W	do	do	do	SW.
Oliver L. Perin, as The Union Dist'g Co.	6	D, T, W	do	do	do	SW.
Oliver L. Perin, as Hoffheimer Bros.	6	D, T, W	do	do	do	SW.
Oliver L. Perin, as Star Distilling Co.	6	D, T, W	do	do	do	SW.
Oliver L. Perin, as Haslerlik Bros.	6	D, T, W	do	do	do	SW.
Oliver L. Perin, as Elk Head Dist'g Co.	6	D, T, W	do	do	do	SW.
Oliver L. Perin, as John A. Scott & Co.	6	D, T, W	do	do	do	SW.
Oliver L. Perin, as L. Sonnenschien.	6	D, T, W	do	do	do	SW.
The Union Dist'g Co.	9	T. W	do	do	do	N.
D. Roher*	11	D. T. W	do	Germantown	Montgomery	SW.
The Mill Creek Dist'g Co.	12	T, W	do	Cincinnati	Hamilton	SW.
The Storrs Dist'g Co.*	12	D, T, W	do	do	do	S.
Julius Freiberg, as Freiberg & Workum.	13	D, T, W, E	do	Lynchburgh	Hiland	S.
Julius Freiberg, as H. Altman & Co.	13	D, W	do	do	do	S.
Julius Freiberg, as E. Ammon & Co.	13	D, T, W	do	do	do	S.
Julius Freiberg, as H. R. Adler & Co.	13	T, W	do	do	do	S.
Julius Freiberg, as Aganan Dist'g Co.	13	D, W	do	do	do	S.
Julius Freiberg, as N. Y. Brintnall.	13	D, T, W	do	do	do	S.
Julius Freiberg, as Bourbon Dist'g Co.	13	D, T, W	do	do	do	S.

MES OF DISTILLERS AND LOCATION OF DISTILLERY WAREHOUSES IN WHIC SPIRITS WERE HELD ON DEPOSIT, ETC.—Continued.

OHIO—Continued.

Name of distiller.	Distillery number and transaction.		District.	Post-office or town.	County.	Section of State.
1	2		3	4	5	6
ulius Freiberg, as Boehm & Co.	13	D, T, W	First	Lynchburgh	Hiland	S.
ulius Freiberg, as S. C. Boehm & Co.	13	D, T, W	do	do	do	S.
ulius Freiberg, as Clinton Dist'g Co.	13	D, T, W	do	do	do	S.
ulius Freiberg, as Childs & Co.	13	D, T, W	do	do	do	S.
ulius Freiberg, as J. C. Childs & Co.	13	D, T, W	do	do	do	S.
ulius Freiberg, as Clear Spring Distilling Co.	13	D, T, W	do	do	do	S.
ulius Freiberg, as The Calhoun Distilling Co.	13	D, T, W	do	do	do	S.
ulius Freiberg, as Edwin Davey.	13	T, W	do	do	do	S.
ulius Freiberg, as Delaney & Murphy.	13	D, T, W	do	do	do	S.
ulius Freiberg, as Dillon & Co.	13	D, T, W	do	do	do	S.
ulius Freiberg, as Elmwood Distilling Co.	13	D, W	do	do	do	S.
ulius Freiberg, as Engel, Heller & Co.	13	T	do	do	do	S.
ulius Freiberg, as Freeman Bros.	13	T, W	do	do	do	S.
ulius Freiberg, as Frechlick Bros.	13	T, W	do	do	do	S.
ulius Freiberg, as Gabel & Levy.	13	D, T, W	do	do	do	S.
ius Freiberg, as M. Filbert.	13	D, W	do	do	do	S.
ius Freiberg, as G. Fleishelm &	13	D, W	do	do	do	S.
Freiberg, as Grotte.	13	D, T, W	do	do	do	S.
Freiberg, as F. Hewitt.	13	D, T, W	do	do	do	S.
Freiberg, as & Loeb.	13	T, W	do	do	do	S.
Freiberg, as Hines.	13	T, W	do	do	do	S.
Freiberg, as ner.	13	D, W	do	do	do	S.
Freiberg, as Hartman &	13	T, W	do	do	do	S.
eiberg, as k & Co.	13	T	do	do	do	S.
eiberg, as man.	13	W	do	do	do	S.
iberg, as milton.	13	D, T, W	do	do	do	S.
berg, as an.	13	D, T, W	do	do	do	S.
berg, as sen.	13	T, W	do	do	do	S.
berg, as & Co.	13	D, T, W	do	do	do	S.
erg, as Club	13	D, T, W	do	do	do	S.
rg, as on.	13	T, W	do	do	do	S.
g, as r.	13	T, W	do	do	do	S.

OF DISTILLERS AND LOCATI... DEPOS...
SPIRITS WERE HELD ON ...

OHIO—Continued.

me of distiller.	Distillery number and transaction.		District.	Post-office or town.	County.	Section of State.
1	2		3	4	5	6
ulius Freiberg, as C. Kinzenberger.	13	T, W	First	Lynchburg	Hiland	S.
Julius Freiberg, as F. Kelly & Co.	13	D, T, W	do	do	do	S.
Julius Freiberg, as Linder's Hill Dist'g Co.	13	T, W	do	do	do	S.
Julius Freiberg, as M. Levy & Son.	13	T, W	do	do	do	S.
Julius Freiberg, as D. H. Lewis.	13	D, T, W	do	do	do	S.
Julius Freiberg, as Lilienthal & Co.	13	D, T, W	do	do	do	S.
Julius Freiberg, as John Ludwig & Son.	13	D, T, W	do	do	do	S.
Julius Freiberg, as John Leffler.	13	D, T, W	do	do	do	S.
Julius Freiberg, as Linwood Dist'g Co.	13	D, T, W	do	do	do	S.
Julius Freiberg, as Lexington Dist'g Co.	13	D, T, W	do	do	do	S.
Julius Freiberg, as A. McCusker & Son.	13	D, T, W	do	do	do	S.
Julius Freiberg, as L. W. Mack.	13	D, T, W	do	do	do	S.
Julius Freiberg, as M. Meyers.	13	D, T, W	do	do	do	S.
Julius Freiberg, as Haywood Dist'g Co.	13	D, T, W	do	do	do	S.
Julius Freiberg, as D. Osborn & Co.	13	D, T, W	do	do	do	S.
Julius Freiberg, as L. Petzold.	13	D, T, W	do	do	do	S.
Julius Freiberg, as The Old Windmill Dist'g Co.	13	D, W	do	do	do	S.
Julius Freiberg, as The Ullman Goldsborough.	13	D, T, W	do	do	do	S.
Julius Freiberg, as The Red Cross Dist'g Co.	13	D, T	do	do	do	S.
Julius Freiberg, as E. Rindskopf & Co.	13	T	do	do	do	S.
Julius Freiberg, as Ripe Grain Dist'g Co.	13	D, T, W	do	do	do	S.
Julius Freiberg, as Robitzer & Bertalott.	13	D, T, W	do	do	do	S.
Julius Freiberg, as Raybuck Dist'g Co.	13	D, T, W	do	do	do	S.
...reiberg, as J.		D, T, W				

LISTS OF DISTILLERS AND LOCATION OF DISTILLERY WAREHOUSES IN WHICH SPIRITS WERE HELD ON DEPOSIT, ETC.—Continued.

OHIO—Continued.

Name of distiller.	Distillery number and transaction.		District.	Post-office or town.	County.	Section of State.
1	2		3	4	5	6
lius Freiberg, as Windsor Club Dist'g Co.	13	T, W	First	Lynchburgh	Hiland	S.
lius Freiberg, as John H. Walsh.	13	T, W	do	do	do	S.
lius Freiberg, as Weidman, Holmes & Co.	13	D, T, W	do	do	do	S.
ulius Freiberg, as J. E. Wasseobehr & Son.	13	D, T, W	do	do	do	S.
ulius Freiberg, as C. Wezler,	13	D, W	do	do	do	S.
Julius Freiberg, as The California Wine Company.	13	D, W	do	do	do	S.
John Boyle & Co	18	T, W	do	Higginsport	Brown	SW.
Fleischman & Co.*	21	D, T, W	do	Riverside	Hamilton	SW.
Lewis Hayner*	2	D, T, W	Tenth	Troy	Miami	W.
A. Amster	4	T, W	do	Monroeville	Huron	N.
Andrew Staley	5	D, W	do	Rex	Miami	W.
Brickner & Ehrenfried.*	51	D, T, W	do	Tiffin	Seneca	N.
James Emmitt*	2	D, T, W	Eleventh	Waverly	Pike	S.
F. C. Trebein	3	T	do	Trebein's	Green	W.
Martin A. Cesner*	4	D, T, W	do	Dresden	Muskingum	C.
C. Koppe*	5	D, T, W	do	Cardington	Morrow	C.
Spring Lane Dis'g Co*	7	D, T, W	do	Portsmouth	Scioto	S.
William Burns*	14	T, W	do	Springfield	Clark	W.
Israel Drum	15	T	do	Lithopolis	Fairfield	C.
O. M. Gilbert*	18	D, T, W	do	Ashley	Delaware	C.
R. C. Bigbee*	19	D, T, W	do	Levering	Knox	C.
R. C. Bigbee, successor to Bigbee & Van Buskirk.	19	T	do	do	do	C.
John Ramser*	1	D, T, W	Eighteenth	Powhatan Point	Belmont	E.
J. W. Thorla*	2	D, T, W	do	Penrock	North	E.
Cyrus E. Davis*	3	D, T, W	do	Demos	Belmont	E.
Wachner*	4	D, T, W	do	Magadore	Portage	NE.
Fire, Rummel & Co.	5	D, T, W	do	New Middleton	Mahoning	NE.
Do.*	5	D, W	do	do	do	NE.
Ickert Brothers*	10	D, T, W	do	Petersburgh	do	NE.
M. Miller*	16	D, T, W	do	Cairo	Stark	NE.
K. Bowman*	18	D, T, W	do	Wooster	Wayne	N.
B. Thompson	29	T	do	Port Washington	Tuscarawas	W.
B. Thompson &	29	T, W	do	do	do	W.
Seeger*	33	D, T, W	do	New Springfield	Mahoning	NE.

PENNSYLVANIA.

ung Co. (lim-	1	D, T, W	First	408 So. st. Phila.	Philadelphia	SE.
Dougherty's	2	T, W	do	1134 N. Fr'nt St., Phila.	do	SE.
	2	D, T, W	do	do	do	SE.
Brensinger &	3	D, T, W	do	Auburn	Schuylkill	E.
lbach*	8	D, T, W	do	Mount Ætna	Berks	SE.
	10	T, W	do	Reading	do	SE.
inkle*	11	D, T, W	do	East Berkley	do	SE.
	45	D, T, W	do	Kutztown	do	SE.
k (estate)	1	T, W	Ninth	High Spire	Dauphin	C.
son Dist'g	1	D, T, W	do	do	do	C.
	2	T, W	do	Bainbridge	Lancaster	SE.
holder	3	T, W	do	Lititz	do	SE.
ler*	3	D, T, W	do	do	do	SE.

NAMES OF DISTILLERS AND LOCATION OF DISTILLERY WAREHOUSES IN W[illegible]HIC SPIRITS WERE HELD ON DEPOSIT, ETC.—Continued.

PENNSYLVANIA—Continued.

Name of distiller.	Distillery number and transaction.		District.	Post-office or town.	County.	Section of State.
1	2		3	4	5	6
B. F. Welty*	4	D, T, W	Ninth	Waynesborough	Franklin	S.
J. Sechrist*	5	T, W	do	Felton	York	S.
M. Grube	6	T, W	do	Huntingdon	Huntingdon	S.
P. & H. Small*	7	T, W	do	St. Thomas	Franklin	S.
E. Hake*	8	D, T, W	do	New Cumberland	Cumberland	S.
H. Free & Co.*	9	T, W	do	Etters	York	S.
A. J. Unger*	10	D, T, W	do	Foltz	Franklin	S.
D. Y. Lenker*	11	D, T, W	do	Millersburgh	Dauphin	S.
Elias Bruan*	12	D, T, W	do	Railroad	York	S.
I. Hollenshead (estate).	13	T	do	Foltz	Franklin	S.
J. Waidlich*	13	D, T, W	do	do	do	S.
B. F. Crouse & Co	14	T, W	do	Newville	Cumberland	S.
Jacob W. Wheeler*	14	D, T, W	do	do	do	S.
W. Foust*	15	D, T, W	do	Glen Rock	York	S.
O. W. Good	16	W	do	Midvale	Franklin	S.
J. N. Stewart*	17	T, W	do	Masseysburgh	Huntingdon	S.
H. Kauffman*	18	D, T, W	do	Sporting Hill	Lancaster	E.
R. Johnson*	19	D, T, W	do	Greencastle	Franklin	S.
N. Miller*	20	D, T, W	do	Elizabethville	Dauphin	S.
Weaver & Son*	21	D, T, W	do	do	do	S.
P. Hughes*	22	D, T, W	do	Schellsburgh	Bedford	S.
W. A. Kottka	23	T, W	do	Elizabethville	Dauphin	S.
S. & M. L. Snyder	26	T	do	Maria	Bedford	S.
J. Crouse	27	T	do	Middleburgh	Snyder	S.
D. K. Haas	27	T, W	do	do	do	S.
Marks & Enders	27	D, T, W	do	do	do	S.
C. Habecker*	28	D, T, W	do	Penn	Lancaster	E.
J. C. Clugston*	29	D, T, W	do	Rowzersville	Franklin	S.
Lauck Bros*	30	D, T, W	do	Bowmansdale	Cumberland	S.
J. Shawver*	31	D, T, W	do	Middlesworth	Snyder	S.
A. B. Sheaffer*	32	D, T, W	do	Lancaster	Lancaster	E.
A. E. Fyan*	33	D, T, W	do	Kegg	Bedford	S.
S. S. Brumbaugh*	34	D, T, W	do	New Enterprise	do	S.
J. F. Sheaffer*	35	D, T, W	do	Lancaster	Lancaster	E.
Osterburg Dist'g Co	39	T, W	do	Osterburgh	Bedford	S.
A. S. Bomberger & Bro.*	48	D, T, W	do	Schaefferstown	Lebanon	E.
W. F. Romig*	9	D, T, W	Twelfth	Stockertown	Northampton	E.
Mrs. M. Beezer (administratrix).*	10	T	do	Bellefonte	Centre	C.
Mrs. M. Bosch*	10	T, W	do	do	do	C.
J. R. Fowler & Co.*	11	D, T, W	do	Pine Summit	Columbia	C.
G. N. Oyster*	13	D, T, W	do	Washingtonville	Montour	C.
A. Cole & Son*	15	D, T, W	do	Cole's Creek	Columbia	C.
Ash & Bro*	17	D, T, W	do	Berwick	do	C.
J. K. Reish*	18	D, T, W	do	Cowan	Union	N.
P. K. Fisher*	19	D, T, W	do	Clarkestown	Lycoming	N.
J. P. & S. H. Shoemaker.*	20	D, T, W	do	do	do	N.
J. G. Siegel*	21	D, T, W	do	Salladasburgh	do	N.
G. Haag*	22	D, T, W	do	Pleasant Gap	Centre	C.
N. W. Eby*	23	D, T, W	do	Woodward	do	C.
Miller & Steckel	27	D, T	do	Bath	Northampton	E.
S. Miller*	27	D, T, W	do	do	do	E.
W. B. Nace*	28	D, T, W	do	Petersville	do	E.
B. F. Edgar & Co.*	29	D, T, W	do	Stillwater	Columbia	C.
R. Taylor*	30	T, W	do	Philipsburgh	Centre	C.
H. S. & W. B. Cole	31	T, W	do	Mifflin Cross Rds.	Columbia	C.
O. W. Van Valin*	32	T, W	do	Coburn	Centre	C.
R. McHenry & Co.*	33	D, T, W	do	Benton	Columbia	C.
A. Guckenheimer & Bros.*	1	D, T, W	Twenty-third	Freeport	Armstrong	W.
I. N. Burson*	2	T, W	do	Fredericktown	Washington	SW.
A. Overholt & Co.*	3	T, W	do	Broad Ford	Fayette	SW.
Youghiogheny Dist. Co.	3	T, W	do	do	do	SW.
J. S. Finch & Co.*	4	D, T, W	do	Pittsburgh	Allegheny	SW.
The Large Dist. Co.*	5	D, W	do	West Elizabeth	do	SW.
G South*	6	D, T, W	do	Bald Hill	Greene	SW.
G. W. Jones	7	T, W	do	Brownsville	Fayette	SW.
G. W. Jones Dist. Co.*	7	D, T, W	do	do	do	SW.

DISTILLERS AND LOCATION OF DISTILLERY WAREHOUSES IN WHICH SPIRITS WERE HELD ON DEPOSIT, ETC.—Continued.

PENNSYLVANIA—Continued.

Distiller.	Distillery number and transaction.		District.	Post-office or town.	County.	Section of State.
	2		3	4	5	6
Co.....	7	D, T, W.....	Twenty-third..	Brownsville.....	Fayette..	SW.
.....	7	D, W	....do	....do	....do	SW.
.....	7	D, W	....do	....do	....do	SW.
.....	7	D, T, W.....	....do	....do	....do	SW.
iday ...	7	T, W	....do	....do	....do	SW.
Co.*...	8	D, T, W.....	....do	Freeport.....	Armstrong.....	W.
.....	8	D, T, W.....	....do	....do	....do	W.
& Co..	8	T, W	....do	....do	....do	W.
iday ...	8	T, W	....do	....do	....do	W.
Dist'g	8	D, T, W.....	....do	....do	....do	W.
Dist'g	8	D, T, W.....	....do	....do	....do	W.
.....	8	W	....do	....do	....do	W.
rings	8	D, W	....do	....do	....do	W.
ott*....	9	T, W	....do	Lippincott.....	Greene	SW.
*.....	10	T, W	....do	Monongahela City	Washington....	SW.
.....	11	T, W	....do	....do	....do	SW.
.....	12	D, T, W.....	....do	Masontown	Fayette	SW.
y*.....	13	D, T, W.....	....do	Latrobe.....	Westmoreland..	SW.
ott*....	14	D, T, W.....	....do	Gibsonton	....do	SW.
Sons*.	15	D, T, W.....	....do	Ruff's Dale	....do	SW.
.....	16	D, T, W.....	....do	Gray's Landing..	Greene	SW.
'.....	17	T, W	....do	Gibbon's Glade..	Fayette.....	SW.
.....	17	T	....do	....do	....do	SW.
fg Co.*	18	D, T, W.....	....do	Kammerer.....	Washington	SW.
h*.....	19	D, T, W.....	....do	Farmington	Fayette.....	SW.
n	19	T	....do	....do	....do	SW.
.....	20	T, W.....	....do	Millsborough	Washington	SW.
.....	20	D, T, W.....	....do	....do	....do	SW.
.....	21	D, T, W.....	....do	McKeesport	Allegheny	SW.
.....	22	D, T, W.....	....do	Manor Station...	Westmoreland..	SW.
Dist. Co*	23	T, W	....do	Shireoaks.....	Washington	SW.
'.....	24	D, T, W.....	....do	New Baltimore ..	Somerset	SW.
'.....	25	D, T, W.....	....do	Sand Patch	....do	SW.
., Dist.).*	26	D, T, W.....	....do	Vallonia	Crawford	NW.
.....	27	D, T, W.....	....do	Brownsville.....	Fayette.....	SW.
'.....	28	D, T, W.....	....do	Sand Patch	Somerset	SW.
.....	29	D, T, W.....	....do	Allenport.....	Washington	SW.
*.....	30	D, T, W.....	....do	Knox	Clarion	W.
l & Co..	31	T	....do	Arthur	....do	W.
ıer*....	31	D, T, W.....	....do	....do	....do	W.
.....	32	D, T, W.....	....do	Berlin	Somerset.	SW.
.....	33	D, T, W.....	....do	Myersdale	....do	SW.
.....	34	D, T, W.....	....do	Clarion	Clarion	W.
.....	36	T	....do	Painterville.....	Mifflin	C.
.....	37	D, T, W.....	....do	Wellersburgh ...	Somerset	SW.
.....	38	T, W	....do	Foxtown	Westmoreland..	SW.
nger...	39	T, W	....do	New Castle	Lawrence.....	W.
er*.....	39	T, W	....do	....do	....do	W.
.....	40	D, T, W.....	....do	New Baltimore ..	Somerset	SW.
.....	43	D, T, W.....	....do	....do	....do	SW.
.....	44	T, W	....do	Gibbon's Glade ..	Fayette.....	SW.
.....	44	D, T, W.....	....do	....do	....do	SW.
.....	45	T	....do	West Brownsville	Washington	SW.
s.....	45	T, W	....do	....do	....do	SW.
*.....	46	D, T, W.....	....do	Kingwood	Somerset	SW.
.....	47	D, T, W.....	....do	Scott Dale.....	Westmoreland..	SW.
.....	48	D, T, W.....	....do	Berlin	Somerset	SW.
.....	50	D, T, W.....	....do	Houtzdale	Clearfield	C.
ıms*...	52	D, T, W.....	....do	Carrolltown	Cambria	C.
.....	53	T, W	....do	Zelienople	Butler	W.
'.....	54	D, T, W.....	....do	Fairchance	Fayette.....	SW.

NAMES OF DISTILLERS AND LOCATION OF DISTILLERY WAREHOUSES IN WHICH SPIRITS WERE HELD ON DEPOSIT, ETC.—Continued.

SOUTH CAROLINA.

Name of distiller.	Distillery number and transaction.		District.	Post-office or town.	County.	Section of State.
1	2		3	4	5	6
W. R. Price	239	T, W	South Carolina.	Sunny Dale	Pickens	NW.
J. F. Hightower*	273	D, T, W	do	Lima	Greenville	NW.
M. H. Bryce*	310	D, T	do	Walhalla	Oconee	NW.
H. D. A. Biemann*	315	D, T, W	do	do	do	NW.
J. A. Stewart	316	T	do	Mile Creek	Pickens	NW.
W. M. Welborn	350	W	do	Easley	do	NW.
J. S. H. Price	351	W	do	Crow Creek	do	NW.
A. P. Bridwell	354	T	do	Beech Island	Aiken	W.
M. H. Bryce	355	D, T, W	do	Walhalla	Oconee	NW.
H. D. A. Biemann*	358	D, T, W	do	do	do	NW.
Do.*	359	D, T, W	do	do	do	NW.
Durham, Fisher & Belue.	363	D, T	do	Landrum	Spartanburgh	NW.
W. R. Lowry*	364	T, W	do	Bethany	York	N.
H. D. A. Biemann*	368	D, T, W	do	Walhalla	Oconee	NW.
Do.*	369	D, T, W	do	do	do	NW.
J. W. Moody*	371	D, T, W	do	Wattacoo	Pickens	NW.
M. H. Bryce	372	D, T, W	do	Walhalla	Oconee	NW.
H. D. Biemann*	374	D, T, W	do	do	do	NW.
J. H. Payne	378	D, T	do	Central	Pickens	NW.
James F. Griffin*	379	D, T, W	do	Belton	Anderson	NW.
W. C. Tatham	380	D, T, W	do	Walhalla	Oconee	NW.

TENNESSEE.

C. R. Ross*	136	D, T, W	Second	Meadowfield	Hancock	NE.
W. S. Thompson	137	D, T, W	do	Chucky Valley	Washington	NE.
Harmon Brewer	138	D, T, W	do	Sneedville	Hancock	NE.
Jeptha Wolf*	140	D, T, W	do	Brays	do	SE.
W. H. Wimberly*	141	D, T, W	do	Ocoee	Polk	NE.
W. W. Gambrill*	142	D, T, W	do	Mooresburgh	Hawkins	NE.
Jacob Collins	143	D, W	do	Sneedville	Hancock	NE.
M. H. Hansard*	212	D, T, W	do	Graveston	Union	NE.
Jos. Hurley*	235	D, T, W	do	Newport	Cocke	NE.
W. O. Phillips*	236	D, T, W	do	Dugger's Ferry	Carter	NE.
N. J. Walker	237	T	do	Adolphus	Loudon	NE.
H. I. Welcker*	237	D, T, W	do	do	do	C.
Henry Keck	240	T	do	Keck's Chapel	Claiborne	NE.
S. N. Kelley*	249	D, T, W	do	Meltabarger	Union	NE.
Morrison & Ross	309	D, T	do	Xenophon	Hancock	NE.
John Hughes*	312	D, T, W	do	Johnson City	Washington	E.
Wm. Whillock*	313	D, T, W	do	Mount's Cross Roads.	Jefferson	SE.
W. E. Taylor	314	T	do	Cog Hill	Polk	NE.
John Mills*	316	D, T, W	do	Meadowfield	Hancock	E.
Swan & Slover*	318	D, T, W	do	Danridge	Jefferson	C.
J. D. Mayes*	329	D, T, W	do	Bacchus	Claiborne	NE.
I. Wilson*	337	D, T, W	do	Jacksboro	Campbell	NE.
A. J. Willoughby*	350	D, T	do	Rohdelia	Union	NE.
Wm. White*	369	D, T, W	do	Sample	Hamblen	C.
Robert Stone*	377	D, T, W	do	Spring Dale	Claiborne	SE.
H. I. Welcker	399	T, W	do	Regret	McMinn	NE.
A. Montgomery*	400	D, T, W	do	Brays	Hancock	NW.
G. W. Swor*	2	D, T, W	Fifth	Buchanan	Henry	N.
Chas. Nelson*	5	D, T, W	do	Green Brier	Robertson	N.
Chas. Nelson, as B. J. Semmes & Co.	5	T, W	do	do	do	NW.
James Groves & Co.	6	T, W	do	Mitchellville	Sumner	C.
R. H. Mason & Co.	10	T, W	do	McMinnville	Warren	C.
Wakeman & Hodges*	11	D, T, W	do	Sparta	White	C.
J. W. Miller*	14	D, T, W	do	Rock Island	Warren	S.
Tolley Bros.*	29	D, T, W	do	Lynchburgh	Moore	S.
R. S. McClure	32	T	do	Huntland	Franklin	S.
J. H. McClure*	32	D, T, W	do	do	do	S.
Zach Thompson*	62	D, T, W	do	Caldwell	Bedford	C.
M. H. Brinkly	63	D, W	do	Tullahoma	Coffee	C.
Cashion & Martin*	64	D, W	do	Hawthorne	Bedford	N.
J. H. Woodard	79	T	do	Springfield	Robertson	N.
J. R. Bridges & Son*	83	D, W	do	do	do	N.

NAMES OF DISTILLERS AND LOCATION OF DISTILLERY WAREHOUSES IN WHICH SPIRITS WERE HELD ON DEPOSIT, ETC.—Continued.

TENNESSEE—Continued.

Name of distiller.	Distillery number and transaction.		District.	Post-office or town.	County.	Section of State.
1	2		3	4	5	6
T. J. Eaton*	104	D, T, W	Fifth	Lynchburgh	Moore	S.
John Woodard	110	D, T, W	do	Springfield	Robertson	N.
Pitt Bros.*	135	D, T, W	do	do	do	N.
Arledge & Vaun*	183	D, T, W	do	Winchester	Franklin	S.
Stephens & Co.*	201	D, T, W	do	Cortner's Station.	Bedford	C.
Flemming & Mattox*	209	D, T, W	do	Pondville	Sumner	N.
Wm. Copeland*	210	D, W	do	Flintville	Lincoln	S.
Wm. Copeland & Co.	210	D, T, W	do	do	do	S.
J. W. Stone*	211	D, T, W	do	Stonesboro	do	S.
Cowley & Solomon*	215	D, T, W	do	Kelso	do	S.
N. A. Warren*	225	D, T, W	do	Marbut's	Giles	S.
S. H. Trigg*	227	D, T, W	do	Maxwell	Franklin	S.
W. A. Copeland*	388	D, T, W	do	Flintville	Lincoln	S.
M. B. Sims	392	D, T, W	do	Tullahoma	Coffee	C.
Davis & Co.*	392	D, T, W	do	do	do	C.
Barney Patterson*	393	D, T, W	do	Normandy	Bedford	C.
Spencer & Baxter*	396	D, T	do	Lynchburgh	Moore	S.
Tolley & Eaton*	397	D, T, W	do	County Line	do	S.
T. J. Lee*	487	D, T, W	do	Gabbatha	Putnam	N.
J. B. Gunn*	488	D, T, W	do	Maxwell	Franklin	S.
F. M. Perdue	489	T, W	do	Richland	Sumner	N.
Bragg & Jameson	492	T	do	Springfield	Robertson	N.
Daniel Woodard	496	T, W	do	do	do	N.
Denning & Perdue	502	D, T, W	do	New Roe, Ky	Sumner, Tenn.	N.
Geo. E. Rogers*	505	D, T, W	do	Hickman, Ky	Obion, Tenn	NW.
G. D. Crutcher	510	D, W	do	Murfreesborough	Rutherford	C.
John W. Durham*	511	D, T, W	do	New Roe, Ky	Sumner, Tenn.	N.
M. G. Osborn	512	W	do	Winchester	Franklin	S.
W. F. Panter*	512	D, T, W	do	do	do	S.
Jack Daniel*	514	D, T, W	do	Lynchburgh	Moore	S.
T. F. Wooton*	515	D, T, W	do	Normandy	Bedford	C.
W. P. Carroll	516	D, T, W	do	Tullahoma	Coffee	C.
J. C. Barnes*	517	D, T, W	do	Double Springs	Putnam	N.
Henry Bose*	519	D, T, W	do	Winchester	Franklin	S.
Bose & Sherwood	519	D, T	do	do	do	S.
D. Woodard & Co	521	D, T, W	do	Springfield	Robertson	N.
J. H. Woodard*	521	D, T, W	do	do	do	C.
John Trigg*	522	D, T, W	do	Maxwell	Franklin	S.
J. S. Brown*	524	D, T, W	do	Springfield	Robertson	N.
S. L. Arledge	525	D, T, W	do	Winchester	Franklin	S.
Sims & Davis*	527	D, T, W	do	Tullahoma	Coffee	C.
Isaac Vanzant*	528	D, T, W	do	Winchester	Franklin	S.
Do.*	529	T, W	do	do	do	S.
Hornady & Mitchell*	530	D, T, W	do	Singleton	Bedford	S.
Eastwood & Hall*	531	D, T, W	do	Lexie	Franklin	S.
West & Williams*	532	D, T, W	do	Maxwell	do	S.
J. T. Montgomery*	533	T, W	do	Tullahoma	Coffee	C.
J. E. Spencer & Co.*	534	D, T, W	do	Lynchburgh	Moore	S.
Tolly & Eaton*	535	D, T, W	do	Kelso	Lincoln	S.
Smith B. Vaughn	536	T, W	do	Walnut Shade	Macon	N.

TEXAS.

H. J. KcRae & Bro	4	T	Fourth	Elwood	Fannin	NE.
Wynn & Donaldson*	8	T, W	do	Ben Franklin	Delta	NE.
G. W. Pool	13	T	do	Copeville	Collins	NE.
J. A. Laws*	14	T, W	do	Hagansport	Franklin	NE.
B. J. & J. D. Harris*	15	T, W	do	Andrews	Wood	NE.
A. M. Dawson*	16	D, T, W	do	Halesborough	Red River	NE.
T. A. Clayton & Bro	17	D, T	do	Omaha	Morris	NE.
T. A. Clayton*	17	D, T, W	do	do	do	NE.
W. M. Stringfellow	18	D, T, W	do	Daingerfield	do	NE.

NAMES OF DISTILLERS AND LOCATION OF DISTILLERY WAREHOUSES IN WHICH SPIRITS WERE HELD ON DEPOSIT, ETC.—Continued.

VIRGINIA.

Name of distiller.	Distillery number and transaction.		District.	Post-office or town.	County.	Section of State.
1	2		3	4	5	6
L. D. Myerley*	1	D, W	Sixth	Staunton	Augusta	W.
L. D. Myerley & Co.	1	D, T, W	do	do	do	W.
W. M. Warren*	2	D, T, W	do	Independence	Grayson	SW.
P. M. Engleman*	3	D, T, W	do	Engleman	Rockbridge	W.
E. A. Fulcher*	4	D, T, W	do	Staunton	Augusta	W.
H. Koiner*	5	D, T, W	do	Koiner's Store	do	W.
A. Zollman*	6	D, T, W	do	Lexington	Rockbridge	W.
A. McCartney*	7	D, T, W	do	Ripley's Mills	Craig	W.
J. Bumgardner & Son	8	T	do	Greenville	Augusta	W.
J. A. Bumgardner*	8	D, T, W	do	do	do	W.
J. F. Clemmer*	10	D, T, W	do	Middlebrook	do	W.
W. H. Robinson	11	T	do	Madison Court-House.	Madison	N.
A. Woodard	12	D, T	do	Sperryville	Rappahannock	N.
A. J. Treavey*	14	D, T, W	do	Big Island	Bedford	C.
D. S. Dean*	15	D, T, W	do	Quinque	reen	SC.
G. W. Crist	16	D, T, W	do	Chatham	Pittsylvania	SW.
William Green*	18	D, T, W	do	Jonesville	Lee	SW.
Shelor & Souder	19	T, W	do	Copper	Floyd	SW.
S. B. Hancock*	19	D, T, W	do	do	do	N.
J. C. Burnes	20	D, T, W	do	Luray	Page	W.
J. M. Adams	28	T	do	Rockbridge Baths	Rockbridge	W.
M. N. Bradley	37	T	do	Staunton	Augusta	W.
David Beard*	167	D, T, W	do	New Hope	do	N.
L. E. Savage*	223	D, T, W	do	Kernstown	Frederick	N.
J. Masemere	508	T, W	do	Brownstown	Warren	N.
Foster & Co.*	522	D, T, W	do	Folly Mills	Augusta	W.
H. A. McCormick	523	T	do	Brownsburgh	Rockbridge	C.
D. E. Rosenbaum	533	T	do	Liberty	Bedford	C.
J. McCarter	533	D, T, W	do	do	do	N.
T. V. Fry & Co.	593	T	do	Madison Court-House.	Madison	N.
Peter Feagan	635	T	do	Arlington	Alexandria	N.
Mahoneysville Distilling Company.*	635	D, T, W	do	do	do	N.
N. G. F. Heller	636	D, T, W	do	Mount Olive	Shenandoah	N.
Ashby & McKay	694	T, W	do	Front Royal	Warren	N.
A. A. McKay*	694	D, T, W	do	do	do	N.
A. J. & W. P. Broy	763	T	do	Cedar Point	Page	N.
A. J. Broy	763	D, T, W	do	do	do	N.
Williams & Feagan	765	T, W	do	Pedlar Mills	do	N.
G. L. Revercomb*	821	D, T, W	do	Slate Mills	Rappahannock	N.
A. T. Walden	821	T	do	do	do	W.
W. H. Hershaw*	822	T, W	do	Lithia	Botetourt	C.
F. A. Massie*	823	D, T, W	do	Lowsville	Amhurst	S.
T. T. Carter	887	T, W	do	Dan	Franklin	S.
W. D. A. Fallin*	913	D, T, W	do	Caddo	Pittsylvania	SW.
T. C. Helms	914	T	do	Salem	Roanoke	SW.
M. Montgomery	1095	T	do	Turman	Floyd	SW.
J. M. Smith*	1096	D, W	do	Terry's	do	N.
W. T. Miller*	1104	D, T, W	do	Bentonville	Warren	SW.
J. J. Spangler*	1108	D, T, W	do	Mendota	Washington	S.
R. M. Terry*	1111	D, T, W	do	South Boston	Halifax	SW.
R. D. Candler*	1114	D, T, W	do	Rural Retreat	Wythe	S.
R. J. W. Houseman*	1116	T, W	do	Union Hall	Franklin	SW.
J. D. Blackwell	1117	D, T, W	do	Saltville	Washington	SW.
J. W. Richardson*	1119	D, T, W	do	Lester	Montgomery	N.
M. L. Hamman	1124	D, T, W	do	Capon Roads	Shenandoah	S.
T. T. Carter	1129	T, W	do	Mayo Forge	Patrick	S.
J. P. Williams	1130	D, T, W	do	Witt Spur	do	SW.
P. D. Cooper*	1132	D, T, W	do	Olympia	Smyth	N.
Adam Seekford	1134	D, T, W	do	Alma	Page	W.
J. F. Cale	1135	D, T, W	do	Alleghany Station.	Alleghany	SW.
J. G. Lester	1138	D, T, W	do	Snapp's	Tazewell	SW.
J. N. Edwards	1139	D, T	do	Sylvatus	Carroll	SW.
C. H. Thomas*	1141	D, T, W	do	Hillsville	do	S.
H. C. Price*	1144	D, T, W	do	Dillon's Mill's	Franklin	N.
A. Barb*	1150	D, T, W	do	Shenandoah Alum Springs.	Shenandoah	S.
W. R. Harvey*	1151	D, T, W	do	Danville	Pittsylvania	SW.
C. M. Marshall	1152	D, T, W	do	Stone Mountain	Carroll	

S OF DISTILLERS AND LOCATION OF DISTILLERY WAREHOUSES IN WHICH SPIRITS WERE HELD ON DEPOSIT, ETC.—Continued.

VIRGINIA—Continued.

e of distiller.	Distillery number and transaction.		District.	Post-office or town.	County.	Section of State.
1	2		3	4	5	6
ige	1153	D, T, W	Sixth	Ula	Franklin	S.
akes	1155	D, T, W	do	Charity	Patrick	S.
ose*	1204	D, T, W	do	Brewster	Russell	SW.
ubbard*	1218	D, T, W	do	Boydton	Mecklenburgh	S.
mith*	1248	D, T, W	do	Newport	Giles	SW.
Fore*	1264	D, T, W	do	Clover	Halifax	S.
t & Smith	1415	T, W	do	Newport	Giles	SW.
nter*	1415	D, T, W	do	do	do	SW.
ins*	1575	D, T	do	Longfield	Bee	SW.
rnard*	1638	D, T, W	do	Floyd Court-House.	Floyd	N.
ood	1644	D, T	do	Colesville	Patrick	S.
illars*	1666	D, T, W	do	Danville	Pittsylvania	S.
Shorts	1674	D, T, W	do	Alma	Page	N.
onrad*	1676	D, T, W	do	Linden	Warren	N.
ones*	1677	D, T, W	do	Mandota	Washington	SW.
osenbaun*	1679	D, T, W	do	Roanoke	Roanoke	SW.
Hensley*	1680	D, T, W	do	Red Bank	Halifax	S.
itt*	1682	D, T, W	do	Mendota	Washington	SW.
Hash*	1683	D, T, W	do	Estelsville	Scott	SW.
Williams	1684	D, T, W	do	New Glasgow	Amherst	C.
. Kite*	1686	D, T, W	do	Kite	Page	N.
d Murry*	1700	D, T, W	do	Clarksville	Mecklenburgh	S.
Allen	1701	D, T	do	St. Paul	Carroll	SW.
unley*	1702	D, T, W	do	Holston	Washington	SW.
ose*	1703	D, T, W	do	Bickley's	Russell	SW.
ige*	1705	D, T, W	do	Glade Hill	Franklin	S.
a Fisher*	1706	D, T, W	do	Bonbrook	do	S.
illaspie	1707	D, T, W	do	Goshen Bridge	Rockbridge	W.
Marshall	1708	D, T, W	do	Foster's Falls	Wythe	SW.
Childs	1709	D, T, W	do	Bess	Alleghany	W.
urchett	1710	D, T, W	do	Walnut Hill	Lee	SW.
hildress	1711	D, T, W	do	Hillsville	Carroll	SW.

WEST VIRGINIA.

Dist'g Co.*	1	D, T, E, W	West Virginia	Martinsburgh	Berkeley	NE.
arrett	4	T, W	do	Fetterman	Taylor	N.
Orndorff*	7	D, T, W	do	Yellow Spring	Hampshire	NE.
Zepp*	8	D, T, W	do	Wardensville	Hardy	NE.
W. Yankey*	9	D, T, W	do	Petersburgh	Grant	NE.

WISCONSIN.

& Co.*	1	D, T, W	First	St. Lawrence	Washington	E.
arth	2	T, W	do	Lake	Milwaukee	SE.
le Dist'g Co.	3	D, T, W	do	Milwaukee	do	SE.
	4	D	do	Two Rivers	Manitowoc	E.
ers	5	T, W	do	Wauwatosa	Milwaukee	SE.
eek Dist'g Co*	6	D, T, W	do	Greenfield	do	SE.
r Rieta*	18	D, T, W	do	Silver Creek	Sheboygan	W.

DIFFERENT KINDS OF TAX-PAID SPIRITS WITHDRAWN FROM WAREHOUSE DURING THE YEAR.

STATEMENT OF THE QUANTITY IN TAXABLE GALLONS OF EACH KIND OF SPIRITS AS KNOWN TO THE TRADE WITHDRAWN FROM DISTILLERY WAREHOUSES, TAX-PAID, DURING THE YEAR ENDED JUNE 30, 1889.

District and State.	Bourbon whisky.	Rye whisky.	Alcohol.	Rum.	Gin.	High wines.	Pure, neutral, or Cologne spirits.	Miscellaneous.	Aggregate.	Specific kind of spirits reported in miscellaneous column.
Alabama								1,196	1,196	Corn whisky.
Arkansas		651						54,032	54,683	Corn whisky.
First California	9,280						213,580		222,860	
Fourth California	397								397	
Connecticut					78,609				78,609	
Georgia		147						347,763	347,910	Corn whisky.
First Illinois	21,170		1,593,502		193,712	319	4,163,791	669,570	6,642,064	Whisky, other than sour mash.
Fifth Illinois	570,911	37,316	3,869,063		192,337	268,306	15,629,895	711,340	21,279,168	Whisky.
Eighth Illinois		162	943,647			1,285	1,105,108	12,587	2,062,789	
Thirteenth Illinois	2,097		7,433			96	40,351	45	50,022	Whisky.
Sixth Indiana	102,887	141,373	282,407		25,279	236,404	165,376	1,243,153	2,196,879	
Seventh Indiana	29,903	151	521,975					2,603,691	3,155,720	Spirits and whisky.
Fourth Iowa	766								766	
Second Kentucky	1,401,558	6,400	27,499						1,435,457	
Fifth Kentucky	7,257,385	341,695	592,762			28,578	9,684	9,976	8,240,080	
Sixth Kentucky	1,000,824	244,278	62,124	55,194	93,862		55,554	1,986,173	3,498,004	Whisky and malt.
Seventh Kentucky	1,768,512	237,491	270		1,674			169,127	2,177,074	Malt and copper distilled.
Eighth Kentucky	1,137,689	66,194							1,203,883	
Maryland		1,455,203	88			164,491	335,205		1,954,987	
Third Massachusetts				972,276	77,280				1,049,556	
Minnesota			297,287				639,925	4,875	942,087	Whisky.
First Missouri	58,659	1,552	392,162		49,675	137	763,386	43,678	1,339,249	Whisky and corn whisky.
Sixth Missouri	136,904	5,121	282,936		4,390	313	547,322	10,619	987,605	Corn whisky.
Nebraska	125,004	16,245	754,078				1,207,141		2,102,468	
New Hampshire				23,177					23,177	
Fifth New Jersey		202,412					120,123		322,535	
First New York			299,448		133,752	129	736,232	57,479	1,227,040	
Twenty-eighth New York	56,663	113,532	56,593	1,128	30,017	7,443	331,047	8,323	604,746	Malt whisky.
Fourth North Carolina		374		162				52,036	52,572	
Fifth North Carolina								505,994	505,994	Corn whisky.
First Ohio	870,358	246,784	613,965		116,966	37,451	2,647,016	2,568,895	7,101,435	Copper distilled, corn, malt, whisky.
Tenth Ohio	18,702	7,335							26,037	
Eleventh Ohio	9,426	3,852			69	253,173	157,739	619	424,878	Wheat whisky.
Eighteenth Ohio	4,077	37,635						852	42,564	Potato, wheat, and malt whisky.
Oregon		5,000				2,689		161	7,850	Corn whisky.
First Pennsylvania		409,546						164	409,710	Wheat and malt whisky.
Ninth Pennsylvania		190,962				2,581			193,543	

Twelfth Pennsylvania		45,432							45,432	
Twenty-third Pennsylvania	2,796	1,960,972			245		10,634	169,300	2,143,947	Corn, wheat, malt, Montrose, and copper whisky.
South Carolina								29,899	29,899	Corn whisky.
Second Tennessee		56						37,970	38,026	
Fifth Tennessee		8,278						706,427	709,705	Corn spirits.
Fourth Texas								5,855	5,855	Corn whisky.
Sixth Virginia		155,804						2,014	157,908	Corn whisky.
West Virginia	9,468	274,940				41		340	284,789	
First Wisconsin	12,575	25,660	142,495		5,602	21,670	271,034	41,535	520,571	Kümmel and malt whisky.
Total	14,638,011	6,237,647	10,739,734	1,051,937	1,003,469	1,025,106	29,150,143	12,055,688	75,901,735	
Total tax-paid during the year ended June 30, 1888.	12,190,013	5,148,244	10,487,988	1,114,544	863,288	1,944,586	28,289,687	11,403,511	70,541,811	

INCREASED WITHDRAWALS OF TAX-PAID SPIRITS.

The quantity of spirits (75,901,735 gallons) withdrawn tax-paid from distillery warehouses during the fiscal year ended June 30, 1889, is more than the quantity (70,541,811 gallons) withdrawn from distillery warehouses during the fiscal year ended June 30, 1888, by 5,359,924 gallons, the increase being distributed among the different kinds known to the trade as follows:

Increase in withdrawals of—

	Gallons.
Bourbon whisky	2,447,998
Rye whisky	1,089,403
Alcohol	251,796
Gin	140,181
Pure, neutral, or cologne spirits	860,456
Miscellaneous	652,177
Total increase	5,442,011

Decrease in withdrawals of—

	Gallons.	
Rum	62,607	
High wines	19,480	
Total decrease		82,087
Net increase		5,359,924

If the quantity, 1,615,316 gallons (as stated by the Chief of the Bureau of Statistics), of exported domestic spirits re-imported during the year upon payment of a customs duty equal to the internal revenue tax be added, the quantity virtually withdrawn from distillery warehouses during the year ended June 30, 1889, is found to be 77,517,051 gallons, or 4,339,448 more than during the year 1888, including the 2,635,792 gallons re-imported and tax-paid during that year.

WITHDRAWAL OF PRODUCTS BY MONTHS.

The quantity of each month's product of spirits in warehouse July 1, 1888, which was withdrawn during the year ended June 30, 1889, is shown in the following statement:

[In taxable gallons.]

Product of—	In warehouse July 1, 1888.	Withdrawn during the year ended June 30, 1889.	Remaining in warehouse June 30, 1889.
1885.			
Prior to June, 1885	1,893,522		
June	783,052		
July	162,381		
August	80,372		
September	117,608		
October	340,286		
November	648,418		
December	1,520,750		
1886.			
January	2,214,053		
February	2,626,438		
March	3,619,169		
April	3,613,412		
May	3,521,959		
Prior to June, 1886	21,141,420	18,274,560	2,866,860
June	1,427,671	601,030	826,641

Product of—	In warehouse July 1, 1888.	Withdrawn during the year ended June 30, 1889.	Remaining in warehouse June 30, 1889.
1886.			
July	292, 478	121, 586	170, 892
August	150, 837	84, 994	65, 843
September	275, 399	102, 734	172, 665
October	643, 916	223, 200	420, 716
November	1, 047, 588	324, 382	723, 206
December	2, 080, 465	497, 910	1, 582, 555
1887.			
January	2, 442, 489	526, 462	1, 916, 027
February	2, 701, 553	455, 247	2, 246, 306
March	3, 488, 446	555, 749	2, 932, 697
April	3, 740, 024	571, 085	3, 168, 939
May	2, 724, 365	436, 653	2, 287, 712
June	1, 233, 361	474, 370	758, 991
July	661, 686	363, 081	298, 605
August	260, 126	105, 370	154, 756
September	354, 773	137, 752	217, 021
October	693, 176	312, 208	380, 968
November	915, 912	275, 379	640, 533
December	1, 272, 255	363, 636	908, 619
1888.			
January	1, 652, 415	533, 632	1, 118, 783
February	1, 965, 248	536, 357	1, 428, 891
March	2, 530, 818	744, 798	1, 786, 020
April	2, 441, 875	777, 818	1, 664, 057
May	2, 739, 491	1, 103, 219	1, 636, 272
June	2, 155, 231	1, 419, 879	735, 352
Total	61, 033, 913	29, 923, 981	31, 109, 927

DIFFERENT KINDS OF SPIRITS LOST BY LEAKAGE OR EVAPORATION IN WAREHOUSE DURING THE YEAR.

STATEMENT OF THE QUANTITY IN TAXABLE GALLONS OF EACH KIND OF SPIRITS AS KNOWN TO THE TRADE LOST FROM DISTILLERY WAREHOUSES DURING THE YEAR ENDED JUNE 30, 1889.

District and State.	Bourbon whisky.	Rye whisky.	Alcohol.	Rum.	Gin.	High wines.	Pure, neutral, or cologne spirits.	Miscellaneous.	Aggregate.	Specific kinds of spirits reported in "Miscellaneous" column.
Alabama										
Arkansas		39						1,533	1,572	Corn whisky.
First California	48						79		127	
Fourth California										
Connecticut					317				317	
Georgia		5						881	886	Do.
First Illinois	1,836		34		76		88	29,916	31,950	Whisky other than sour mash.
Fifth Illinois	35,609	6,123	1,503		18	10	8,986	1,360	53,609	Whisky.
Eighth Illinois		18					528	447	993	
Thirteenth Illinois	86		5				37	1	129	Do.
Sixth Indiana	10,091	16,896	3					17,276	44,266	
Seventh Indiana	2,042	8	693					2,610	5,353	Spirits and whisky.
Fourth Iowa	70								70	
Second Kentucky	171,623	387	29						172,039	
Fifth Kentucky	980,628	54,390	606			54		1,042	1,036,720	
Sixth Kentucky	144,129	18,470	17	1,747	68			51,220	215,651	Whisky and malt.
Seventh Kentucky	290,979	44,111						4,305	339,395	Malt and copper distilled.
Eighth Kentucky	208,106	9,510							217,616	
Maryland		288,984				745	5,864		295,593	
Third Massachusetts				18,989	358				19,347	
Minnesota			465				317		782	
First Missouri	4,476	107	32				45	169	4,829	Whisky and corn whisky.
Sixth Missouri	8,605	337	172				2,385	698	12,203	Corn whisky.
Nebraska	1,593	1,653	393				1,610		5,248	
New Hampshire				1,085					1,085	
Fifth New Jersey		14,096							14,096	
First New York					80		15	3,265	3,310	
Twenty-eighth New York	2,844	16,261	1	120			924	1,284	21,434	Malt whisky.
Fourth North Carolina				7				492	499	
Fifth North Carolina								45	45	Corn whisky.
First Ohio	54,366	29,421	877		38			44,675	129,377	Copper-distilled corn, wheat and malt whisky.
Tenth Ohio	2,104	1,033							3,137	
Eleventh Ohio	1,206	246			3	6,049	157	16	7,677	Wheat whisky.
Eighteenth Ohio	242	3,725						31	3,998	
Oregon		562							562	
First Pennsylvania		45,960						13	45,973	
Ninth Pennsylvania		20,431				142			20,573	
Twelfth Pennsylvania		2,126							2,126	

Twenty-third Pennsylvania	288	297,661					214	25,324	323,487	Corn, wheat, malt, Montrose, and copper-distilled whisky.
South Carolina								83	83	Corn whisky.
Second Tennessee								49	49	
Fifth Tennessee		2,921						39,136	42,057	Corn spirits.
Fourth Texas								541	541	Corn whisky.
Sixth Virginia		8,920						4	8,924	
West Virginia	1,018	53,779						38	54,835	
First Wisconsin	1,026	807			83	376	173	84	2,549	
Total	1,923,014	938,986	4,836	21,948	991	7,376	21,422	226,538	3,145,111	
Lost by leakage during the year ended June 30, 1888.	1,280,040	692,070	3,123	22,698	1,469	8,368	8,626	192,933	2,209,327	

DISTILLED SPIRITS ALLOWED FOR LOSS BY LEAKAGE OR EVAPORATION IN WAREHOUSE.

The quantity of spirits (3,145,111 gallons) reported in the preceding table as lost by leakage or evaporation in warehouse, is that portion of actual leakage in warehouse from packages withdrawn during the year which has been allowed in accordance with the provisions of section 17 of the act of May 28, 1880.

The following statement shows the quantity of spirits, as per original gauge, withdrawn from warehouse for all purposes during the stated period, and the amount and percentage of leakage allowed thereon under the provisions of the act named:

Year.	Total quantity withdrawn.	Leakage allowed.	Percentage of withdrawals.
	Gallons.	*Gallons.*	
1880	78,199,283	75,634	.096
1881	84,335,900	811,466	.962
1882	80,281,611	1,231,336	1.533
1883	83,291,190	2,291,013	2.750
1884	92,022,593	3,858,494	4.193
1885	a90,925,782	4,424,314	4.866
1886	b78,566,767	1,806,868	2.299
1887	70,782,951	1,833,681	2.591
1888	74,391,751	2,209 327	2.969
1889	81,879,458	3,145,111	3.841

a Includes 7,750,696 gallons stamped for export not actually withdrawn.
b Includes 2,494,091 gallons stamped for export not actually withdrawn.

The increase of 935,784 gallons leakage, allowed under section 17 of the act of May 28, 1880, over the quantity so allowed during the previous year, is distributed among the different kinds of spirits known to the trade as follows:

Increase of leakage allowed for—	Gallons.
Bourbon whisky	642,974
Rye whisky	246,916
Alcohol	1,713
Pure, neutral, or cologne spirits	12,796
Miscellaneous	33,605
Total increase of leakage	938,004

Decrease of leakage allowed for—	Gallons.
Rum	750
Gin	478
High wines	992
Total decrease of leakage	2,220
Net increase of leakage allowed in 1889	935,784

The following statement shows the quantity of each specific kind of spirits as per original gauge withdrawn from warehouse for all purposes during the fiscal year ended June 30, 1889, and the amount and percentage of leakage allowed thereon under the provisions of the act named:

Kind of spirits.	Total quantity withdrawn.	Leakage allowed.	Percentage of withdrawals.
	Gallons.	*Gallons.*	
Bourbon whisky	17,971,607	1,923,014	10.700+
Rye whisky	7,554,680	938,986	12.429+
Alcohol	11,112,153	4,836	0.043+
Rum	1,497,791	21,948	1.465+
Gin	1,006,939	991	0.010
High wines	1,032,482	7,376	0.714+
Pure, neutral, or cologne spirits	29,372,064	21,422	0.073
Miscellaneous	12,331,142	236,538	1.837

Deducting the above percentage of allowance for leakage from the tax of 90 cents per gallon the actual rate of tax collected from the original gauge of the different kinds of spirits is as shown in the first column of figures in the following table:

The rate of tax on the quantity of alcohol and other spirits not allowed to remain in bond is also somewhat decreased by the advantage taken of the law which provides that certain fractions of gallons shall be dropped, as set forth on page 58 of this report. The estimate given on page 59 that 500,000 of such fractions in excess of the number reckoned as whole gallons were dropped during the year would make the number of whole gallons dropped somewhat less than 250,000, as each fraction dropped must be less than a half gallon. This quantity uniformly distributed among all kinds, except bourbon and rye whiskies, reduces the rate of tax very little, as appears from the second column of figures in the following table:

	Cents per gallon.	Cents per gallon.
Bourbon whisky	90.370	90.370
Rye whisky	78.814	78.814
Alcohol	89.613	89.562
Rum	88.682	88.282
Gin	89.992	89.512
High wines	89.357	88.958
Pure, neutral, or cologne spirits	89.934	89.536
Miscellaneous	88.347	87.948

EXPORTATION OF DISTILLED SPIRITS.

The following statements show the quantities of spirits of different kinds withdrawn for export during the last two fiscal years:

1. BY DISTRICTS WITHDRAWN IN 1888.

[Quantities in taxable gallons.]

District and State.	Bourbon whisky.	Rye whisky.	Alcohol.	Rum.	Gin.	High wines.	Pure, neutral, or cologne spirits.	Miscellaneous.	Aggregate.	Specific kinds of spirits reported in miscellaneous column.
First California	414								414	
First Illinois										
Fifth Illinois			195,687				11,256		206,943	
Eighth Illinois										
Sixth Indiana			2,179					210	2,389	
Seventh Indiana			5,705						5,705	
Fourth Iowa						6,952			6,952	
Second Kentucky	399								399	
Fifth Kentucky	23,532	3,182							26,714	
Sixth Kentucky	9,909							3,683	13,592	Malt whisky.
Seventh Kentucky	124,197	96,236							220,433	
Eighth Kentucky	11,608								11,608	
Maryland		17,513					8,704		26,217	
Third Massachusetts				800,534					800,534	
First Missouri	215		16,245						16,460	
Sixth Missouri			33,477						33,477	
Nebraska			29,277				44,338		73,615	
First New York			1,117		568		3,046	1,737	6,468	
Twenty-eighth New York		9,566							9,566	
First Ohio	556	3,155						6,387	10,098	Copper-distilled corn, malt, and whisky.
Twenty-third Pennsylvania		17,419						41	17,460	
Fifth Tennessee		14,128							14,128	
West Virginia		11,033							11,033	
Total	170,830	172,232	283,687	800,534	568	6,952	67,344	12,058	1,514,205	
Withdrawn during the year ended June 30, 1887	217,800	47,535	883,886	755,147	3,470		284,385	31,690	2,223,913	

EXPORTATION OF DISTILLED SPIRITS—Continued.

2. BY DISTRICTS WITHDRAWN IN 1889.

[Quantities in taxable gallons.]

District and State.	Bourbon whisky.	Rye whisky.	Alcohol.	Rum.	Gin.	High wines.	Pure, neutral, or cologne spirits.	Miscellaneous.	Aggregate.	Specific kinds of spirits reported in miscellaneous column.
First California	.....	.....	.....	.....	..	.....	88	.....	88	
First Illinois	.....	.....	.....	.....	..	.....	.....	.....	.....	
Fifth Illinois	21,044	.....	129,540	.....	..	.....	44,841	675	196,700	Whisky.
Eighth Illinois	.....	.....	17,401	.....	..	.....	.....	.....	17,401	
Sixth Indiana	.....	16,011	.....	.....	..	.....	.....	665	16,676	
Seventh Indiana	.....	.....	.....	.....	..	.....	.....	.....	.....	
Second Kentucky	100,715	.....	.....	.....	..	.....	.....	.....	100,715	
Fifth Kentucky	388,365	40,126	.....	.....	..	.....	.....	.....	428,491	
Sixth Kentucky	145,867	981	.....	.....	..	.....	.....	14,724	161,572	Whisky and malt.
Seventh Kentucky	366,467	90,271	.....	.....	..	.....	.....	9,879	466,617	Malt and copper distilled
Eighth Kentucky	371,595	10,802	.....	.....	..	.....	.....	.....	382,397	
Maryland	.....	149,899	.....	.....	..	.....	17,928	.....	167,827	
Third Massachusetts	.....	.....	.....	423,905	..	.....	.....	.....	423,905	
Minnesota	.....	.....	105,540	.....	..	.....	.....	.....	105,540	
First Missouri	.....	.....	12,493	.....	..	.....	.....	.....	12,493	
Sixth Missouri	.....	.....	37,719	.....	..	.....	.....	.....	37,719	
Nebraska	1,044	.....	.....	.....	..	.....	.....	.....	1,044	
First New York	.....	.....	173	.....	..	.....	874	.....	1,047	
First Ohio	257	1,301	.....	.....	..	.....	.....	7,743	9,301	
First Pennsylvania	.....	34	.....	.....	..	.....	.....	.....	34	
Ninth Pennsylvania	.....	18	.....	.....	..	.....	.....	.....	18	
Twenty-third Pennsylvania	.....	19,064	.....	.....	..	.....	.....	281	19,345	
Fifth Tennessee	.....	17,054	.....	.....	..	.....	.....	.....	17,054	
West Virginia	.....	24,251	.....	.....	..	.....	.....	.....	24,251	
Total	1,395,954	369,812	302,866	423,905	..	..	63,731	33,967	2,590,235	
Withdrawn during the year ended June 30, 1888	170,830	172,232	283,687	800,534	568	6,952	67,344	12,058	1,514,205	

EXPORTATION OF DISTILLED SPIRITS—Continued.

3. BY FOREIGN AND DOMESTIC PORTS, IN 1888.

[Quantities in taxable gallons.]

Ports to which exported.	Alcohol.					Pure, neutral, or Cologne spirits.	
	New York.	Boston.	Laredo.	Brownsville.	El Paso.	New York.	Port Huron.
*Aspinwall, Central America	14,063						
Bermudas	258					11,750	
Bluefields, Central America	858						
*Boca del Toro, Central America	2,179						
*Colon, Central America	20,058						
Greytown, Central America	9,405						
Livingston, Central America	4,897						
Matamoros, Mexico				33,667			
Melbourne, Australia						5,570	
Montevideo, South America	13,901						
Nuevo Laredo, Mexico			11,694				
*Panama, Central America	10,742						
Paso del Norte, Mexico					5,728		
Ponce, West Indies	4,272						
Port au Prince, West Indies	879						
Prescott, Canada							37,386
Santa Cruz de Teneriffe, Canary Islands	8,680						
St. Pierre, St. Pierre and Miquelon	19,050	47,753					
St. Thomas, West Indies	8,642					5,686	
St. Andrews, Canada	859						
Sarnia, Canada							6,952
Yokohama, Japan	66,102						
Total	184,845	47,753	11,694	33,667	5,728	23,006	44,338

Ports to which exported.	Bourbon whisky.										
	New York.	Boston.	Laredo.	St. Vincent.	El Paso.	Port Huron.	Port Townsend.	San Francisco.	San Diego.	Eagle Pass.	New Orleans.
Bermudas	67,442										
Bluefields, Central America	209										771
Bremen, Germany	75,469										
Belize, Central America											1,019
*Colon, Central America											791
Cartago, Central America											202
Ensenada, Mexico									407		
Honolulu, Sandwich Islands	2,483										
Hamburg, Germany	1,814										
Livingston, Central America											291
London, England	427										
Marseilles, France	41										
Matamoros, Mexico											382
Mexico, Mexico					1,144						
Nuevo Laredo, Mexico			787								
Paso del Norte, Mexico					2,971						
Port Limon, Central America											214
Piedras Negras, Mexico					414					836	
Rotterdam, Netherlands	424										
St. Thomas, West Indies	2,021										
St. John, Canada		3,225									
Victoria, Canada				3,114			559				
Vera Cruz, Mexico	169										
Waterloo, Canada						2,164					
Yokohama, Japan								633			
Tax paid at port of export					216						191
Total	148,016	5,708	787	3,114	4,745	2,164	559	633	407	836	3,861

* This port is in the political division known prior to 1861 as New Grenada, from 1861 to 1886 as the United States of Colombia, and since 1886 as the Republic of Colombia.

EXPORTATION OF DISTILLED SPIRITS—Continued.

8. BY FOREIGN AND DOMESTIC PORTS, IN 1888.

[Quantities in taxable gallons.]

Ports to which exported.	Rye whisky.					Rum.		
	New York.	Baltimore.	Boston.	El Paso.	Philadelphia.	Boston.	New York.	New Orleans.
Alexandria, Egypt							4,590	
Bermudas	76,091							
Bordeaux, France	36							
Bremen, Germany	29,671	36,148						
*Colon, Central America								1,046
Cape Coast, Africa						279,979		
Constantinople, Turkey						4,419		
Elmina, Africa						252,833		
Greytown, Central America	44							
Grand Bassam, Africa						82,784		
Honolulu, Sandwich Islands			3,115					
Hamburg, Germany	13,190							
Havana, West Indies	43							
Havre, France	314							
Liverpool, England		39			179	80,175		
London, England	629	20						
Marseilles, France	40							
Paso del Norte, Mexico				312				
St. Thomas, West Indies	11,585							
St. John, Canada						4,977		
Sierra Leone, Africa						37,428		
Smyrna, Turkey						52,303		
Shanghai, China	199							
Vera Cruz, Mexico	346							
Tax paid at port of export	231							
Total	132,419	36,207	3,115	312	179	794,898	4,590	1,046

Ports to which exported.	Gin.	High wines.	Miscellaneous.				
	New York.	New York.	Boston.	New Orleans.	El Paso.	St. Vincent.	New York.
Antwerp, Belgium	336						
Bermudas							1,737
Bluefields, Central America				2,141			208
Colon, Central America				210			
Honolulu, Sandwich Islands			5,458				
Hamburg, Germany		6,952					
Livingston, Central America				808			
Mexico, Mexico					41		
Paso del Norte, Mexico					884		
Port Limon, Central America				440			
St. Andrews, Canada	232						
Victoria, Canada						121	
Total	568	6,952	5,458	3,599	925	121	1,945

* See foot-note, page 131.

EXPORTATION OF DISTILLED SPIRITS—Continued.

BY FOREIGN AND DOMESTIC PORTS IN 1889.

[Quantities in taxable gallons.]

orts to which exported.	Alcohol.						Pure, neutral, or cologne spirits.				
	New York.	Boston.	New Orleans.	Eagle Pass.	Brownsville.	El Paso.	New York.	Boston.	Baltimore.	Port Huron.	San Francisco.
wall, Central America	1,786										
das	4,936						9,686				
lds, Central America							474				
Islands	3,920						88				
, Central America	179										
wn, Central America	9,321										
Mexico						4,930					
ertad, Central America											88
ool, England								6,557	8,642		
ston, Central America	882										
al, Canada										10,716	
oro, Mexico					40,276						
rne, Australia							6,530				
video, South America	86,751										
Laredo, Mexico				27,568							
, West Indies	435										
a, Central America	6,511										
el Norte, Mexico						435					
West Indies	878										
Prince, West Indies	5,711										
ortez, Central America			873								
tt. Canada										20,820	
s Negras, Mexico				2,198							
re, St. Pierre and Miquelon	6,592	47,376									
mas, West Indies	11,685										
i, China	860										
a, Canada											130
ama, Japan	38,763										
Total	179,210	47,376	873	29,766	40,276	5,365	16,778	6,557	8,642	31,536	218

*See foot-note, page 131.

EXPORTATION OF DISTILLED SPIRITS—Continued.

BY FOREIGN AND DOMESTIC PORTS IN 1889.

[Quantities in taxable gallons.]

Ports to which exported.	Bourbon whisky.										
	New York.	Boston.	Baltimore.	Laredo.	Brownsville.	El Paso.	Detroit.	Port Townsend.	Eagle Pass.	New Orleans.	San Francisco.
*Aspinwall, Central America	37	.....	.....	.....	.....	.....	.....	.....	.....	.....	.....
Bermudas	77,950	.....	.....	.....	.....	.....	.....	.....	.....	.....	.....
Bluefields, Central America	.....	.....	.....	.....	.....	.....	.....	.....	.....	38	.....
Bremen, Germany	600,884	.....	568,798	.....	.....	.....	.....	.....	.....	.....	.....
Belize, Central America	.....	.....	.....	.....	.....	.....	.....	.....	.....	426	.....
Cartago, Central America	.....	.....	.....	.....	.....	.....	.....	.....	.....	259	.....
Edinburgh, Scotland	80	.....	.....	.....	.....	.....	.....	.....	.....	.....	.....
Honolulu, Sandwich Islands	1,447	.....	.....	.....	.....	.....	.....	.....	.....	.....	983
Hamburg, Germany	63,018	.....	20,444	.....	.....	.....	.....	.....	.....	.....	.....
Juarez, Mexico	.....	.....	.....	.....	.....	823	.....	.....	.....	.....	.....
Liverpool, England	17,831	.....	.....	.....	.....	.....	.....	.....	.....	.....	.....
Livingston, Central America	.....	.....	.....	.....	.....	.....	.....	.....	.....	1,012	.....
London, England	.....	.....	9,217	.....	.....	.....	.....	.....	.....	.....	.....
Matamoros, Mexico	.....	.....	.....	.....	232	.....	.....	.....	.....	418	.....
Mexico, Mexico	.....	.....	.....	.....	.....	416	.....	.....	213	.....	.....
Nogales, Mexico	.....	.....	.....	.....	.....	256	.....	.....	.....	.....	.....
Nuevo Laredo, Mexico	.....	.....	.....	1,404	.....	.....	.....	.....	.....	.....	.....
Paso del Norte, Mexico	.....	.....	.....	.....	.....	1,645	.....	.....	.....	.....	.....
Port Limon, Central America	.....	.....	.....	.....	.....	.....	.....	.....	.....	472	.....
Piedras Negras, Mexico	.....	.....	.....	.....	.....	.....	.....	.....	3,180	.....	.....
Santo Tomas, Central America	.....	.....	.....	.....	.....	.....	.....	.....	.....	214	.....
St. Thomas, West Indies	14,624	.....	.....	.....	.....	.....	.....	.....	.....	.....	.....
St. John, Canada	.....	3,917	645	.....	.....	.....	.....	.....	.....	.....	.....
Silao, Mexico	.....	.....	.....	.....	.....	.....	.....	.....	45	.....	.....
Sidney, Australia	.....	.....	.....	.....	.....	.....	.....	.....	.....	.....	205
Toronto, Canada	.....	.....	.....	.....	.....	.....	158	.....	.....	.....	.....
Victoria, Canada	.....	.....	.....	.....	.....	.....	.....	298	.....	.....	.....
Tax paid at port of export	4361	.....	.....	.....	.....	.....	.....	.....	.....	.....	.....
Total	780,232	3,917	599,104	1,404	232	3,140	158	298	3,437	2,840	1,193

*See foot-note, page 131.

EXPORTATION OF DISTILLED SPIRITS—Continued.

BY FOREIGN AND DOMESTIC PORTS IN 1889.

[Quantities in taxable gallons.]

Ports to which exported.*	Rye whisky.					Rum.		Miscellaneous.					
	New York.	Boston.	Baltimore.	El Paso.	Eagle Pass.	New York.	Boston.	New York.	Boston.	El Paso.	Laredo.	Brownsville.	New Orleans.
*Aspinwall, Central America	38												
Bermudas	48,137					1,600							
Bluefields, Central America													1,209
Bremen, Germany	59,003		154,589					15,493					
*Colon, Central America	281												
Cape Coast, Africa							262,076						
Elmina, Africa							21,670						
Greytown, Central America	42												
Glasgow, Scotland	39												
Honolulu, Sandwich Islands		1,263						1,084	2,790				
Hamburg, Germany	27,526		42,468					9,879					
Havre, France	198							75					
Juarez, Mexico				204						120			
Liverpool, England							133,741						
London, England	1,050												
Matamoros, Mexico												866	447
Mexico, Mexico					440								
Nuevo Laredo, Mexico											215		
Porto Bello, Central America						228							
Port Limon, Central America													450
Piedras Negras, Mexico					173								
St. Thomas, West Indies	33,258												
St. John, Canada									1,253				
Sierra Leone, Africa							4,590						
Silao, Mexico					44								
Shanghai, China	114												
Vera Cruz, Mexico	863							86					
Tax paid at port of export	82												
Total	170,631	1,263	197,057	204	657	1,828	422,077	26,617	4,043	120	215	866	2,106

*See foot-note, page 131.

SPIRITS REMOVED IN BOND FOR EXPORT.

The following statement shows the quantity and percentage of production of distilled spirits removed in bond for export during each fiscal year since the passage of the act of June 6, 1872:

Year.	Taxable (proof) gallons exported.	Percentage of production.	Year.	Taxable (proof) gallons exported.	Percentage of production.
1873	2,358,630	3.45+	1882	8,092,725	7.64+
1874	4,060,160	5.90+	1883	5,326,427	7.19+
1875	587,413	0.96+	1884	9,586,738	12.70+
1876	1,308,900	2.25+	1885	10,671,118	14.24+
1877	2,529,528	4.22+	1886	5,646,656	7.02+
1878	5,499,252	9.80+	1887	2,223,913	2.85+
1879	14,837,581	20.63+	1888	1,514,205	2.15+
1880	16,765,666	18.55+	1889	2,590,235	2.89+
1881	15,921,482	13.52+			

The quantity of spirits (2,590,235 gallons) withdrawn for exportation during the fiscal year ended June 30, 1889, is more than the quantity (1,514,205 gallons) so withdrawn during the fiscal year ended June 30,

1888, by 1,076,030 gallons, the increase being distributed among the different kinds known in the trade as follows:

Increase in withdrawals of—	Gallons.
Bourbon whisky	1,225,124
Rye whisky	197,580
Alcohol	19,179
Miscellaneous	21,909
Total increase	1,463,792

Decrease in withdrawals of—	Gallons.	
Rum	376,629	
Gin	568	
High wines	6,952	
Pure, neutral, or cologne spirits	3,613	
Total decrease		387,762
Net increase		1,076,030

STATEMENT BY DISTRICTS AND KINDS OF THE QUANTITY OF SPIRITS WITHDRAWN FROM DISTILLERY WAREHOUSES FOR SCIENTIFIC PURPOSES AND FOR THE USE OF THE UNITED STATES DURING THE YEAR ENDED JUNE 30, 1889.

[Quantities in taxable gallons.]

District and State.	Bourbon whisky.	Rye whisky.	Alcohol.	Pure, neutral, or cologne spirits.	Aggregate.
First California				1,071	1,071
First Illinois			3,750	264	4,014
Fifth Illinois			21,813	89	21,902
Eighth Illinois			174		174
Sixth Indiana			89		89
Seventh Indiana			221		221
Fifth Kentucky	630		172		802
Sixth Kentucky			87		87
Maryland		779	353	990	2,122
First Missouri			866		866
Nebraska			348		348
First New York			778		778
Twenty-eighth New York			1,514		1,514
First Ohio			714		714
First Wisconsin			86		86
Total	630	779	30,965	2,414	34,788
Withdrawn for scientific purposes and for the use of the United States during the year ended June 30, 1888	631	854	21,271	2,858	25,614

INCREASED WITHDRAWALS OF SPIRITS FOR SCIENTIFIC PURPOSES AND USE OF THE UNITED STATES.

The above table shows an increase of spirits withdrawn for scientific purposes and for the use of the United States of 9,174 gallons over the quantity so withdrawn in the fiscal year ended June 30, 1888, as follows:

Increase in—	Gallons.
Alcohol	9,694
Decrease in—	
Bourbon whisky	1
Rye whisky	75
Pure, neutral, or cologne spirits	444
Total decrease	520
Net increase	9,174

The increase and decrease shown in the foregoing statement are due to the increased use of alcohol by scientific institutions, especially medical schools, and to the falling off in the demand by the United States for spirits other than alcohol.

TRANSFERS OF SPIRITS FROM DISTILLERY WAREHOUSES TO MANUFACTURING WAREHOUSES.

STATEMENT OF THE QUANTITY OF SPIRITS WITHDRAWN FOR TRANSFER TO MANUFACTURING WAREHOUSES DURING THE YEAR ENDED JUNE 30, 1889.

[Quantities in taxable gallons.]

District and State.	Bourbon whisky.	Rye whisky.	Alcohol.	Pure, neutral, or cologne spirits.	Miscellaneous.	Aggregate.
Fifth Illinois	.....	.....	25,622	134,868	.....	160,490
Fifth Kentucky	2,039	2,653	.....	.....	.....	4,692
Eighth Kentucky	4,504	.....	.....	.....	.....	4,504
Twenty-third Pennsylvania	.....	1,780	.....	.....	.....	1,780
Total	6,543	4,433	25,622	134,868	.....	171,466
Transfer to manufacturing warehouse during the year ended June 30, 1888	2,705	389	25,817	48,789	1,901	79,601

INCREASED TRANSFERS OF SPIRITS FROM DISTILLERY WAREHOUSES TO MANUFACTURING WAREHOUSES.

As compared with transfers in 1888, the above table shows an increase of 91,865 gallons in the quantity of spirits transferred to manufacturing warehouses, distributed as follows:

Increase in—	Gallons.
Bourbon whisky	3,838
Rye whisky	4,044
Pure, neutral, or cologne spirits	86,079
Total increase	93,961

Decrease in—	Gallons.	
Alcohol	195	
Miscellaneous	1,901	
Total decrease		2,096
Net increase		91,865

ALCOHOL IN THE INDUSTRIAL ARTS.

My attention has been called to the provisions relative to alcohol in the industrial arts to be found in the bill (H. R. 9051, Fiftieth Congress, first session) to reduce taxation and simplify the laws in relation to the collection of the revenue.

I find these provisions to be comprised in sections 3 to 11 of said bill, briefly stated, as follows:

Section 3 provides for bonded warehouses for the storage of the alcohol. These are to be in charge of internal-revenue store-keepers, and under regulations of this office and of the Secretary of the Treasury.

Section 4 provides for the transfer of the alcohol from distillery warehouses to the bonded alcohol warehouses provided in section 3.

Section 5 provides for the removal of alcohol from the bonded alcohol warehouses to manufacturers' store-rooms, to be there used in the industrial arts and in the manufacture of drugs and chemicals, proprietary articles and beverages being excepted. This section also provides certain regulations under which bonded alcohol warehouses and manufacturers' store-rooms may be established.

Section 6 provides for the use of warehouse stamps.

Section 7 makes further provision for removals from bonded alcohol warehouses to manufacturers' store-rooms.

Section 8 provides for books and returns of store-keepers at manufacturers' store-rooms, and gives the officers right of access to every part of the manufactory.

Section 9 provides for the methylation of alcohol in the bonded alcohol warehouses and for the use of methylated spirits in the arts and manufactures, for burning, and in the manufacture of compounds except beverages. The permits to use such spirits may be engraved. Bonds and returns may be exacted. Right of access of internal-revenue officers to places where methylated spirits are used is provided. Penalties are imposed to prevent frauds.

Section 10 provides for books and returns of proprietors of bonded alcohol warehouses and manufacturers. Penalty for improper use of alcohol.

Section 11 provides for assessing taxes on spirits not used within three years, forbids use of methylated spirits within 600 feet of a rectifier or distiller, and imposes penalties for non-compliance with the various provisions of the law and regulations.

Should this office be charged with the execution of a law of the kind under consideration, full authority should be conferred upon the Commissioner to regulate the matter, with the approval of the Secretary of the Treasury.

The bill in question appears to confer such authority in all the important cases.

Sections 3, 4, 5, 7, 9, and 10 contain such provisions.

It is suggested, however, that the word "forty-nine" be substituted for "thirty-nine," in line 27 of section 9. This will give full scope to the word "twenty-five" in line 24. Also, that the prohibition in lines 41 to 45 of said section be so modified as to provide that no methylated spirits shall be permitted on any premises in which the business of distilling or rectifying is carried on, or where the business of storing, selling, or offering for sale distilled spirits or wines used and sold as beverages, or in the opinion of the Commissioner of Internal Revenue capable of being so used or sold.

This change will more clearly express the evident intent of the prohibition and avoid an apparent conflict with the business of the proprietor of the bonded alcohol warehouse, who by selling to proprietors of manufacturers' store-rooms would be a wholesale liquor dealer. (See the first twenty lines of section 7, and lines 13, 14, and 15 of section 10.)

In view of the fact that the special temptation to demethylation is to secure a cheap alcoholic beverage, the importance of separating methylated spirits from all stocks of such beverages is very great. It is also equally important to keep methylated spirits out of the hands of distillers and rectifiers who use stills, as it is impossible to demethylate spirits without the use of stills. See report of my predecessor for 1888.

The quantity of alcohol which would be used in the arts and manufactures has been variously estimated. Judging from data obtained by this office in 1882, I would place the quantity at about 8,000,000 gallons annually.

te the additional expense required in carrying these provisions to be as follows:

nal revenue agents, at $8 a day, 300 days	$120,000
l and fifty store-keepers and gaugers in localities where such e not now required at distilleries, at $1,000 per annum	150,000
s to test methyl and methylated spirits, at $1,800 per annum	18,000

LOST BY CASUALTY IN WAREHOUSE DURING THE YEAR.

OF THE QUANTITY OF SPIRITS LOST BY CASUALTY IN DISTILLERY WAREHOUSES DURING THE YEAR ENDED JUNE 30, 1889.

[Quantities in taxable gallons.]

and State.	Bourbon whisky.	Rye whisky.	Alcohol.	Rum.	Gin.	Pure, neutral, or cologne spirits.	Miscellaneous.	Aggregate.	Specific kinds of spirits reported in miscellaneous column.
.....	.....	.....	.....	.....	.....	.....	147	147	Corn whisky.
.....	.....	.....	.....	.....	.....	.....	63	63	Do.
.....	.....	.....	.....	.....	.....	.....	129	129	Do.
.....	.....	.....	8,043	.....	.....	.....	.....	8,043	
.....	1,008	.....	87	.....	.....	86	.....	1,181	
.....	.....	.....	.....	.....	.....	.....	3	3	
cky	1,750	.....	.....	.....	.....	.....	.....	1,750	
ky	147	.....	.....	.....	.....	.....	.....	147	
ky	93	.....	.....	.....	.....	.....	67	160	Whisky and malt.
ucky	129	5	.....	.....	.....	.....	.....	134	
cky	1,721	.....	.....	.....	.....	.....	.....	1,721	
h New York	2,607	.....	.....	1	2,479	.....	4,513	9,600	Malt whisky.
Carolina	.....	.....	.....	.....	.....	.....	2,749	2,749	
Carolina	.....	.....	.....	.....	.....	.....	6,502	6,502	Corn whisky.
io	.....	1	.....	.....	.....	.....	.....	1	
ssee	.....	.....	.....	.....	.....	.....	314	314	
a	.....	2,971	.....	.....	.....	.....	.....	2,971	
in	.....	46	.....	.....	.....	.....	.....	46	
ee	.....	.....	.....	.....	.....	.....	462	462	Corn spirits.
	7,455	3,023	8,130	1	2,479	86	14,949	36,123	
alty during the June 30, 1888.	2,047	1,457	.....	.....	.....	.....	17,689	21,193	

CASUALTIES.

OF DISTILLED SPIRITS REPORTED AS LOST BY CASUALTY IN DISTILLERY SES, INCLUDING SEIZURES, FRAUDULENT REMOVALS, EXCESSIVE LEAK-E, DURING THE FISCAL YEARS 1888 AND 1889.

How lost.	1888.	1889.
	Gallons.	*Gallons.*
.....	14,894	26,209
er casualty (breakage of packages)	604	580
d	93	.....
essive leakage	971	784
essive leakage or theft	882	193
ft	1,678	3,607
iolation of law	1,992	4,271
d for on discontinuance of warehouse, etc	79	479
.....	21,193	36,123

SPIRITS LOST BY FIRE IN WAREHOUSES FOR LAST SEVENTEEN YEARS.

The following statement shows the quantity of spirits lost in distillery warehouses by fire during each of the last seventeen CALENDAR years. As it shows also the stock of spirits in warehouse at the close of each of the fiscal years 1872 to 1888, both inclusive, the percentage of loss on the stock held may be readily computed.

[Quantities in taxable gallons.]

Years.	In bond June 30.	Total loss.	Years.	In bond June 30.	Total loss.
1872	10,103,392	28,399	1882	89,862,645	175,216
1873	12,917,462	9,901	1883	80,499,993	396,280
1874	15,817,709	124,602	1884	63,502,551	416,609
1875	13,367,253	81,493	1885	54,724,916	109,039
1876	12,984,896	99,102	1886	58,096,620	161,194
1877	13,258,794	7,487	1887	65,145,269	112,722
1878	14,088,773	29,913	1888	61,033,018	18,825
1879	19,212,470	2,465			
1880	31,363,869	14,620	Aggregate	680,627,741	2,006,232
1881	64,648,111	198,251			

Average loss, .29 of 1 per cent.

The loss during the six months ended June 30, 1889 was 18,256 gallons, the stock on hand June 30, 1889, being 68,509,288 gallons.

DIFFERENT KINDS OF SPIRITS IN WAREHOUSE, JUNE 30, 1889.

STATEMENT OF THE QUANTITY OF SPIRITS, AS KNOWN TO THE TRADE, REMAINING IN WAREHOUSE JUNE 30, 1889.

[Quantities in taxable gallons.]

District and State.	Bourbon whisky.	Rye whisky.	Alcohol.	Rum.	Gin.	Highwines.	Pure, neutral, or cologne spirits.	Miscellaneous.	Aggregate.	Specific kind of spirits reported in miscellaneous column.
Alabama										
Arkansas								40,548	40,548	Corn whisky.
First California							4,449		4,449	
Fourth California	386								386	
Connecticut					21,504				21,504	
Georgia		879						90,352	91,231	Corn whisky.
First Illinois	81,838		4,103		9,984		22,975	870,892	989,792	Whisky other than sour mash.
Fifth Illinois	184,145	159,277	74,249		658		1,854,316	694,759	2,967,404	Whisky.
Eighth Illinois		1,955	9,754					19,130	30,839	
Thirteenth Illinois	6,229		2,086				3,176	2,274	13,765	Whisky.
Sixth Indiana	121,369	744,183				783	45,898	887,121	1,799,354	
Seventh Indiana	69,841	291	28,623					142,456	241,211	Spirits and whisky.
Fourth Iowa	1,182								1,182	
Second Kentucky	3,746,250	21,244							3,767,494	
Fifth Kentucky	21,213,869	920,681	64,755			8,982	3,104	26,964	22,238,335	
Sixth Kentucky	2,710,481	511,572	12,419	24,474	9,568			1,431,193	4,699,712	Whisky and malt.
Seventh Kentucky	6,169,564	970,495	1,396		911			86,561	7,228,927	Malt and copper-distilled.
Eighth Kentucky	2,563,473	295,280							2,858,753	
Maryland		3,554,948	91			11,174	139,050		3,705,263	
Third Massachusetts				664,650	25,064				689,714	
Minnesota			47,912				7,994	35,746	91,652	Whisky.
First Missouri	34,736	9,328						16,621	60,685	Whisky and corn whisky.
Sixth Missouri	146,610	11,508	79,911		2,804	740	265,038	6,031	512,642	Corn whisky.
Nebraska	62,185	56,546	86,402				208,236		413,369	
New Hampshire				30,055					30,055	
Fifth New Jersey		400,567							400,567	
First New York			6,084		36,435	1,908	1,737	43,110	89,274	
Twenty-eighth New York	57,469	102,742	1,096				25,646	97	187,050	Malt whisky.
Fourth North Carolina		776		25				57,035	57,836	
Fifth North Carolina								207,883	207,883	Corn whisky.
First Ohio	1,810,182	969,337	8,683			5,396	6,224	889,246	3,189,068	Copper-distilled corn, wheat, malt whisky.
Tenth Ohio	45,607	33,182							78,789	
Eleventh Ohio	20,970	3,397				93,581	25,857	208	144,013	Wheat whisky.
Eighteenth Ohio	7,640	51,981						2,456	62,077	Potato, wheat, and malt whisky.
Oregon		6,468				3,756		827	11,051	Corn whisky.
First Pennsylvania		851,912						425	852,337	Wheat and malt whisky.
Ninth Pennsylvania		563,870				1,867			565,737	

DIFFERENT KINDS OF SPIRITS IN WAREHOUSE JUNE 30, 1889—Continued.

STATEMENT OF THE QUANTITY OF SPIRITS, AS KNOWN TO THE TRADE, REMAINING IN WAREHOUSE JUNE 30, 1889—Continued.

[Quantities in taxable gallons.]

District and State.	Bourbon whisky.	Rye whisky.	Alcohol.	Rum.	Gin.	Highwines.	Pure, neutral, or cologne spirits.	Miscellaneous.	Aggregate.	Specific kind of spirits reported in miscellaneous column.
Twelfth Pennsylvania		77,986							77,986	
Twenty-third Pennsylvania	1,950	7,438,179			462		1,974	545,016	7,987,581	Corn, wheat, malt, Montrose and copper-dist. whisky.
South Carolina								16,611	16,611	Corn whisky.
Second Tennessee		563						7,627	8,190	
Fifth Tennessee		12,935						1,123,136	1,136,071	Corn spirits.
Fourth Texas								5,224	5,224	Corn whisky.
Sixth Virginia	97	169,339			2,761			56,319	228,516	Do.
West Virginia	23,168	595,637				41		14,511	633,357	
First Wisconsin	29,090	25,410	6,120		1,939	5,000	6,803	224	74,586	Kümmel and malt whisky.
	38,608,331	18,562,468	433,684	719,204	112,090	133,208	2,622,477	7,320,608	68,512,070	
Remaining in warehouse June 30, 1888	34,619,154	17,367,380	606,702	745,941	89,061	136,195	1,555,787	5,912,798	61,033,018	

PRODUCTS, BY MONTHS, OF SPIRITS IN WAREHOUSE JUNE 30, 1889.

STATEMENT, BY MONTHS OF PRODUCTION, OF SPIRITS IN WAREHOUSE IN EACH DISTRICT OF THE UNITED STATES JUNE 30, 1889.

[Quantities in taxable gallons.]

Month and year.	District of Alabama.	District of Arkansas.	First district of California.	Fourth district of California.	District of Connecticut.	District of Georgia.	First district of Illinois.	Fifth district of Illinois.	Eighth district of Illinois.
Prior to June, 1886							439	14,142	
June, 1886							1,338	668	
July, 1886					46				
August, 1886							226	20,408	
September, 1886									
October, 1886							1,563	915	
November, 1886		46					1,572		
December, 1886		91					1,990		
January, 1887							1,254		
February, 1887							18,017	1,167	
March, 1887					337		11,247	5,816	293
April, 1887							4,485	2,030	
May, 1887							14,965	3,627	1,205
June, 1887		139			85		42,183	18,383	
July, 1887							33,955	21,766	
August, 1887							14,094	39,436	
September, 1887							20,675	8,576	616
October, 1887					46		35,247	11,240	
November, 1887		135					69,215	29,850	
December, 1887		239					17,836	9,379	2,788
January, 1888		85				91	22,179	22,016	3,954
February, 1888		185				448	6,569	3,659	3,330
March, 1888		365				231	9,102	7,829	3,813
April, 1888		250				1,120	7,822	35,291	3,082
May, 1888		411				1,514	34,806	22,958	
June, 1888		426				792	45	174	
July, 1888						1,587			
August, 1888		187				646			
September, 1888		90				599		54,098	
October, 1888		356				419		25,882	
November, 1888		1,449		90		456	4,797	152,428	
December, 1888		2,382		93		1,832	57,[illegible]	236,440	
January, 1889		3,767		194	4,645	5,723	131,616	75,377	
February, 1889		3,786			3,799	6,466	99,344	153,634	1,910
March, 1889		6,369			3,191	10,403	99,236	178,173	94
April, 1889		6,745			3,853	15,116	116,101	495,235	
May, 1889		7,108			2,826	21,932	49,499	581,284	
June, 1889		5,927	4,449		2,676	21,856	60,575	735,523	9,754
Total		40,548	4,449	386	21,504	91,231	989,782	2,967,404	30,839

PRODUCTS, BY MONTHS, OF SPIRITS IN WAREHOUSE JUNE 30, 1889.—Cont'd

STATEMENT, BY MONTHS OF PRODUCTION, OF SPIRITS IN WAREHOUSE IN EACH DISTRICT OF THE UNITED STATES JUNE 30, 1889.

[Quantities in taxable gallons.]

Month and year.	Thirteenth district of Illinois.	Sixth district of Indiana.	Seventh district of Indiana.	Fourth district of Iowa.	Second district of Kentucky.	Fifth district of Kentucky.	Sixth district of Kentucky.	Seventh district of Kentucky.	Eighth district of Kentucky.
Prior to June, 1886	.....	23,531	.....	.....	261,721	1,307,258	123,581	561,206	273,434
June, 1886	.....	4,901	45	.....	51,693	209,911	76,320	87,051	84,591
July, 1886	.....	10,864	.....	.....	.....	15,412	27,070	4,701	299
August, 1886	.....	256	.....	.....	.....	3,061	8,912	.....	.....
September, 1886	.....	154	408	.....	.....	9,415	93	24,774	10
October, 1886	.....	2,996	224	.....	6,730	23,530	6,239	48,200	362
November, 1886	.....	1,196	.....	.....	22,424	192,942	34,399	49,017	37,956
December, 1886	.....	2,040	.....	.....	148,368	719,527	80,467	55,280	77,675
January, 1887	.....	13,358	.....	442	155,421	974,280	116,641	78,009	110,233
February, 1887	.....	23,672	.....	405	181,225	1,097,425	155,834	167,442	111,044
March, 1887	.....	53,154	.....	.....	212,804	1,326,101	230,971	337,818	190,104
April, 1887	.....	33,110	134	335	214,754	1,328,963	235,911	535,246	231,357
May, 1887	.....	41,958	.....	.....	96,155	755,059	214,907	437,043	115,249
June, 1887	.....	58,097	22	.....	86	88,751	32,096	60,814	5,232
July, 1887	.....	5,672	22	.....	47	5,161	9,464	2,306	45
August, 1887	.....	3,468	87	.....	.....	.....	3,728	706	43
September, 1887	.....	3,321	100	.....	13	.....	9,150	3,095	.....
October, 1887	.....	19,173	.....	.....	44	273	27,969	5,754	.....
November, 1887	.....	10,581	.....	.....	42	16,247	26,937	51,353	280
December, 1887	.....	14,044	2,265	.....	92	221,765	46,564	92,399	270
January, 1888	.....	37,537	5,694	.....	17,194	272,472	38,927	151,673	1,846
February, 1888	.....	125,355	534	.....	38,098	387,211	69,174	198,396	5,505
March, 1888	.....	177,117	.....	.....	66,360	452,900	122,688	225,926	14,750
April, 1888	.....	82,153	.....	.....	63,947	423,801	127,061	166,042	14,442
May, 1888	.....	97,902	2,418	.....	45,776	341,589	185,579	114,127	14,682
June, 1888	.....	43,740	394	.....	3,764	83,523	58,693	43,279	1,984
July, 1888	.....	13,383	.....	.....	.....	806	361	142	.....
August, 1888	.....	.....	.....	.....	.....	.....	.....	.....	.....
September, 1888	.....	.....	.....	.....	364	9,493	1,351	.....	29
October, 1888	.....	1,699	62,906	.....	870	102,596	1,033	.....	252
November, 1888	.....	11,858	80,494	.....	2,653	568,399	39,102	170,396	9,947
December, 1888	.....	65,773	706	.....	123,284	1,265,277	221,055	331,333	68,518
January, 1889	.....	105,215	1,786	.....	324,628	1,568,357	273,107	336,060	178,928
February, 1889	4,025	130,487	452	.....	357,088	1,552,193	319,239	475,342	209,848
March, 1889	3,723	154,350	29,507	.....	386,513	1,871,170	340,007	633,586	289,634
April, 1889	2,084	135,470	27,323	.....	396,469	1,927,705	473,615	786,414	303,312
May, 1889	1,412	141,708	18,842	.....	388,969	1,854,004	496,418	658,198	330,330
June, 1889	2,521	150,061	6,848	.....	199,898	1,161,749	464,989	335,809	176,551
Total	13,765	1,799,354	241,211	1,182	3,767,494	22,238,335	4,699,712	7,228,927	2,858,753

PRODUCTS, BY MONTHS, OF SPIRITS IN WAREHOUSE JUNE 30, 1889—Cont'd.

STATEMENT BY MONTHS OF PRODUCTION, OF SPIRITS IN WAREHOUSE IN EACH DISTRICT OF THE UNITED STATES JUNE 30, 1889.

[Quantities in taxable gallons.]

Month and year.	District of Maryland.	Third district of Massachusetts.	District of Minnesota.	First district of Missouri.	Sixth district of Missouri.	District of Nebraska.	District of New Hampshire.	Fifth district of New Jersey.	First district of New York.	Twenty-eighth district of New York.	Fourth district of North Carolina.
Prior to June, 1886	132,688	.....	.....	.....	.....	5,477	.....	845	.....	1,564	1,081
June, 1886	119,439	3,024	.....	.....	896	.....	.....	.....	.....	1,543	130
July, 1886	30,209	1,778	.....	.....	.....	.....	.....	924	430	861	92
August, 1886	.....	4,440	.....	.....	.....	.....	.....	2,431	.....	136	.....
September, 1886	58,473	3,186	.....	.....	.....	.....	.....	848	1,913	1,112	45
October, 1886	89,859	4,576	.....	.....	.....	.....	.....	2,334	1,071	1,957	.....
November, 1886	94,287	4,476	.....	.....	.....	813	.....	423	.....	5,342	141
December, 1886	111,642	1,972	.....	2,596	4,899	16,578	229	5,898	.....	10,064	101
January, 1887	63,861	8,155	.....	144	4,296	11,314	157	847	.....	.....	45
February, 1887	80,189	11,006	.....	.....	5,588	15,964	.....	.....	463	.....	91
March, 1887	103,367	2,747	.....	189	4,539	13,739	3,109	2,115	.....	45	161
April, 1887	119,892	1,359	.....	7,418	977	1,452	710	.....	.....	573	104
May, 1887	143,194	3,353	.....	3,652	22	.....	.....	.....	.....	848	83
June, 1887	84,866	1,743	.....	.....	446	.....	264	.....	.....	2,053	342
July, 1887	15,183	3,376	.....	.....	.....	.....	1,127	10,988	1,446	.....	280
August, 1887	4,532	947	.....	176	.....	.....	183	7,606	.....	444	106
September, 1887	30,726	6,810	.....	1,319	.....	.....	463	1,924	3,227	535	82
October, 1887	42,177	3,899	.....	.....	796	95	456	7,183	.....	3,600	.....
November, 1887	60,988	13,674	.....	.....	1,580	49	504	6,648	.....	4,887	386
December, 1887	55,507	22,670	.....	.....	1,931	549	782	.....	.....	12,275	416
January, 1888	117,806	3,750	.....	230	4,081	.....	684	9,023	.....	2,286	962
February, 1888	119,211	12,867	.....	186	5,166	.....	2,221	12,829	.....	444	937
March, 1888	139,927	31,922	.....	603	3,362	190	.....	12,260	.....	1,018	2,385
April, 1888	123,143	26,524	.....	5,291	9,474	190	1,876	12,508	2,851	2,261	2,410
May, 1888	141,629	13,446	.....	1,669	13,613	.....	1,857	14,756	2,340	.....	3,252
June, 1888	69,183	3,868	.....	2,484	4,880	.....	414	14,873	.....	7,045	3,633
July, 1888	40,292	23,086	.....	.....	.....	.....	.....	16,266	.....	2,393	2,216
August, 1888	3,861	13,475	.....	45	408	.....	.....	13,378	.....	.....	1,133
September, 1888	39,179	18,632	.....	187	44	.....	.....	19,067	.....	.....	1,042
October, 1888	90,170	56,153	.....	.....	1,981	86	.....	10,430	.....	.....	1,782
November, 1888	125,728	32,940	.....	70	8,412	88	373	9,670	.....	3,309	2,676
December, 1888	162,555	21,519	.....	4,228	10,268	.....	1,127	7,961	.....	16,693	3,861
January, 1889	154,939	54,153	.....	834	13,513	29,566	1,807	24,082	.....	18,705	5,011
February, 1889	150,856	43,916	3,992	1,764	47,033	72,372	649	24,515	649	24,678	5,246
March, 1889	186,003	52,149	17,494	4,667	71,242	74,783	2,962	37,201	12,006	21,446	5,500
April, 1889	228,107	44,412	10,684	13,912	115,099	56,746	2,434	36,099	17,901	8,881	5,587
May, 1889	234,107	63,347	27,120	5,062	103,233	33,484	3,076	37,892	16,254	10,966	4,070
June, 1889	137,818	61,264	32,362	3,877	74,911	79,834	2,591	36,784	23,723	14,086	2,447
Total	3,765,263	689,714	91,652	60,685	512,642	413,369	30,055	400,567	89,274	187,050	57,836

PRODUCTS, BY MONTHS, OF SPIRITS IN WAREHOUSE, JUNE 30, 1889—Cont'd

STATEMENT, BY MONTHS OF PRODUCTION, OF SPIRITS IN WAREHOUSE IN EACH DISTRICT OF THE UNITED STATES, JUNE 30, 1889.

[Quantities in taxable gallons.]

Month and year.	Fifth district of North Carolina.	First district of Ohio.	Tenth district of Ohio.	Eleventh district of Ohio.	Eighteenth district of Ohio.	District of Oregon.	First district of Pennsylvania.	Ninth district of Pennsylvania.	Twelfth district of Pennsylvania.
Prior to June, 1886	138	32,067	.....	1,121	.....	.....	10,106	1,561	.....
June, 1886	.....	60,211	.....	1,056	2,089	.....	9,821	2,576	.....
July, 1886	.....	16,204	315	.....	1,181	.....	14,088	5,462	.....
August, 1886	.....	1,238	.....	.....	163	.....	15,856	1,566	.....
September, 1886	.....	17,075	.....	.....	.....	.....	2,699	1,094	377
October, 1886	.....	33,891	.....	180	.....	.....	17,486	1,846	224
November, 1886	43	49,337	.....	1,140	.....	.....	22,692	2,273	1,700
December, 1886	.....	80,527	1,044	.....	.....	.....	24,575	6,883	345
January, 1887	45	95,741	1,512	.....	1,135	1,519	26,139	7,362	1,193
February, 1887	48	78,062	2,051	.....	1,004	1,878	21,585	11,792	979
March, 1887	96	101,051	3,025	2,969	1,722	2,269	29,105	16,735	698
April, 1887	.....	111,401	3,686	5,005	1,830	863	27,754	14,037	2,286
May, 1887	34	105,688	1,776	10,596	1,706	.....	28,632	10,630	2,228
June, 1887	75	75,896	1,800	.....	1,974	.....	27,444	12,075	712
July, 1887	.....	28,844	432	710	1,972	.....	28,163	9,773	227
August, 1887	.....	9,261	.....	2,363	551	.....	6,602	1,769	47
September, 1887	.....	28,926	.....	133	.....	.....	27,255	5,134	41
October, 1887	.....	16,600	.....	3,982	66	.....	29,150	6,966	1,000
November, 1887	.....	91,595	1,066	221	90	.....	29,714	9,123	1,678
December, 1887	100	82,205	4,636	.....	.....	.....	31,784	14,792	1,119
January, 1888	827	90,884	6,839	296	.....	.....	30,443	13,787	1,961
February, 1888	731	104,076	6,663	2,106	870	.....	29,276	21,334	629
March, 1888	1,023	101,101	7,442	2,622	994	.....	32,380	20,247	2,284
April, 1888	1,026	96,879	1,712	10,357	2,905	.....	29,696	18,428	4,287
May, 1888	2,397	100,103	1,410	8,100	785	.....	30,872	21,390	2,449
June, 1888	3,152	91,020	267	2,768	1,137	.....	10,709	21,730	1,895
July, 1888	3,357	29,319	.....	.....	388	.....	.....	14,274	528
August, 1888	2,186	.....	.....	593	44	.....	.....	4,290	661
September, 1888	1,459	.....	.....	651	91	.....	.....	4,288	2,435
October, 1888	2,237	6,804	.....	1,093	429	1,288	539	14,961	3,512
November, 1888	4,142	54,320	1,684	1,865	2,820	1,034	23,974	23,357	5,127
December, 1888	8,080	179,758	5,023	1,311	3,799	1,434	30,787	29,125	4,959
January, 1889	20,367	177,236	6,350	16,841	5,069	126	32,101	41,338	6,006
February, 1889	22,975	195,162	6,209	27,653	6,512	230	30,009	37,063	5,906
March, 1889	28,478	277,393	6,564	15,769	8,043	231	37,553	36,188	6,196
April, 1889	33,118	206,870	6,276	13,961	6,608	240	32,937	34,274	7,723
May, 1889	36,196	185,920	314	12,483	3,404	.....	34,245	38,608	5,030
June, 1889	35,547	180,883	694	1,068	2,567	.....	36,166	27,621	3,017
Total	207,883	3,189,068	78,789	144,013	62,077	11,051	852,337	565,737	77,966

PRODUCTS, BY MONTHS, OF SPIRITS IN WAREHOUSE JUNE 30, 1889—Cont'd.

STATEMENT, BY MONTHS OF PRODUCTION, OF SPIRITS IN WAREHOUSE IN EACH DISTRICT OF THE UNITED STATES, JUNE 30, 1889.

[Quantities in taxable gallons.]

Month and year.	Twenty-third district of Pennsylvania.	District of South Carolina.	Second district of Tennessee.	Fifth district of Tennessee.	Fourth district of Texas.	Sixth district of Virginia.	District of West Virginia.	First district of Wisconsin.	Total in warehouse June 30, 1889.
Prior to June, 1886	74,147	107	.....	8,329	.....	605	81,692	.....	2,866,860
June, 1886	92,165	.....	.....	2,121	.....	141	14,909	.....	826,641
July, 1886	40,415	.....	.....	601	.....	.....	.....	.....	170,892
August, 1886	7,004	.....	61	.....	.....	85	.....	.....	65,843
September, 1886	41,813	.....	.....	1,995	.....	571	9,521	1,989	172,665
October, 1886	145,295	.....	.....	1,750	.....	927	25,144	8,312	420,716
November, 1886	171,566	.....	.....	1,319	.....	750	26,752	.....	723,206
December, 1886	204,211	.....	.....	476	26	296	24,698	.....	1,582,555
January, 1887	221,878	134	.....	.....	46	461	20,397	.....	1,916,027
February, 1887	230,329	90	.....	987	45	145	27,829	.....	2,246,306
March, 1887	244,130	48	.....	1,102	26	1,035	28,042	1,988	2,932,697
April, 1887	253,403	91	.....	9,788	12	1,691	17,940	882	3,168,939
May, 1887	268,251	91	.....	6,722	.....	847	14,294	4,797	2,287,712
June, 1887	229,678	41	.....	6,862	.....	181	5,878	773	758,991
July, 1887	108,075	44	.....	4,228	.....	354	.....	.....	288,605
August, 1887	58,474	45	.....	46	.....	42	.....	.....	154,756
September, 1887	64,039	.....	.....	812	.....	46	.....	.....	217,021
October, 1887	135,503	.....	.....	1,593	.....	46	18,010	90	380,968
November, 1887	194,003	.....	.....	4,787	46	91	14,805	.....	640,553
December, 1887	245,005	.....	.....	10,240	1,170	912	14,879	.....	908,619
January, 1888	238,919	699	.....	6,422	1,121	766	14,226	.....	1,118,783
February, 1888	243,576	586	.....	12,169	881	140	13,477	52	1,428,891
March, 1888	289,426	639	48	36,388	483	2,769	15,283	44	1,756,020
April, 1888	291,294	1,107	267	49,225	235	25,643	14,277	260	1,664,057
May, 1888	318,760	712	387	60,408	167	23,637	15,301	.....	1,636,272
June, 1888	225,839	142	317	27,341	.....	3,884	.....	2,219	735,352
July, 1888	31,841	186	654	27,736	.....	2,412	.....	.....	211,227
August, 1888	18,503	359	.....	34,133	.....	1,073	.....	445	95,412
September, 1888	118,156	.....	189	39,596	.....	663	11,589	.....	323,202
October, 1888	278,752	98	756	46,943	.....	2,624	28,830	.....	745,482
November, 1888	293,145	48	172	53,113	.....	8,239	28,827	.....	1,726,371
December, 1888	313,440	331	.....	54,730	139	12,025	29,156	1,943	3,278,754
January, 1889	322,759	2,211	95	71,099	243	15,867	29,777	8,751	4,068,251
February, 1889	290,920	1,992	607	73,519	430	20,058	26,985	3,668	4,542,873
March, 1889	400,273	2,252	857	95,971	154	31,556	31,679	8,381	5,478,947
April, 1889	437,821	1,993	614	117,004	.....	33,987	37,564	7,532	6,207,826
May, 1889	446,718	1,189	1,363	137,226	.....	19,951	41,434	3,676	6,057,808
June, 1889	398,053	1,376	1,803	129,290	.....	13,996	162	24,684	4,685,810
Total	7,987,581	16,611	8,190	1,136,071	5,224	228,516	633,357	74,586	68,512,070

DIFFERENT KINDS OF SPIRITS PRODUCED, WITHDRAWN, AND REMAINING IN WAREHOUSE FOR LAST TWO FISCAL YEARS.

STATEMENT OF THE QUANTITY OF DISTILLED SPIRITS OF THE DIFFERENT KINDS AS KNOWN TO THE TRADE, PRODUCED, WITHDRAWN, AND REMAINING IN WAREHOUSE IN THE UNITED STATES, FOR THE FISCAL YEARS ENDED JUNE 30, 1888, AND JUNE 30, 1889, RESPECTIVELY.

Distilled spirits—	Bourbon whisky.	Rye whisky.	Alcohol.	Rum.	Gin.	Highwines.	Pure, neutral, or cologne spirits.	Miscellaneous.	Aggregate.
DR.	*Gallons.*	*Gallons.*	*Gallons.*	*Gallons.*	*Gallons.*	*Gallons.*	*Gallons.*	*Gallons.*	*Gallons.*
Remaining in warehouse July 1, 1887	40, 901, 717	17, 502, 936	352, 899	792, 471	81, 396	179, 665	497, 178	4, 937, 007	65, 145, 269
Erroneous charge to casualty October, 1885, corrected	89								89
Erroneous charge to export in previous year corrected	5								5
Produced and bonded during the year	7, 463, 609	5, 879, 690	11, 075, 639	1, 891, 246	872, 990	1, 016, 436	29, 475, 913	12, 603, 883	70, 279, 406
Total	48, 265, 420	23, 382, 626	11, 428, 538	2, 683, 717	954, 386	1, 196, 101	29, 973, 091	17, 540, 890	135, 424, 769
CR.									
Withdrawn on payment of tax during the year	12, 190, 013	5, 148, 244	10, 497, 938	1, 114, 544	863, 288	1, 044. 586	28, 289, 687	11, 403, 511	70, 541, 811
Lost by leakage or evaporation in warehouse	1, 280, 040	692, 070	3, 123	22, 698	1, 469	8, 368	8, 626	192, 933	2, 209, 327
Withdrawn for export during the year	170, 830	172, 232	283, 687	800, 534	568	6, 952	67, 344	12, 058	1, 514, 205
Withdrawn for scientific purposes during the year	631	854	21, 271				2, 858		25, 614
Withdrawn for transfer to manufacturing warehouse	2, 705	389	25, 817				48, 789	1, 901	79, 601
Lost by casualty, etc., during the year	2, 047	1, 457						17, 689	21, 193
Remaining in warehouse June 30, 1888	34, 619, 154	17, 367, 380	606, 702	745, 941	89, 061	136, 195	1, 555, 787	5, 912, 798	61, 023, 018
Total	48, 265, 420	23, 382, 626	11, 428, 538	2, 683, 717	954, 386	1, 196, 101	29, 973, 091	17, 540, 890	135, 424, 769
DR.									
Remaining in warehouse July 1, 1888	34, 619, 154	17, 367, 380	606, 702	745, 941	89, 061	136, 195	1, 555, 787	5, 912, 798	61, 033, 018
Produced and bonded during the year	21, 960, 784	8, 749, 768	10, 939, 135	1, 471, 054	1, 029, 968	1, 029, 495	30, 439, 354	13, 738, 952	89, 358, 510
Total	56, 579, 938	26, 117, 148	11, 545, 837	2, 216, 995	1, 119, 029	1, 165, 690	31, 995, 141	19, 651, 750	150, 391, 528
CR.									
Withdrawn on payment of tax during the year	14, 638, 011	6, 237, 647	10, 789, 734	1, 051, 937	1, 003, 469	1, 025, 106	29, 150, 143	12, 055, 688	75, 901, 735
Lost by leakage or evaporation in warehouse	1, 923, 014	938, 986	4, 836	21, 948	991	7, 376	21, 422	226, 538	3, 145, 111
Withdrawn for export during the year	1, 395, 954	369, 812	302, 866	423, 905			63, 731	33, 967	2, 590, 235
Withdrawn for scientific purposes during the year	630	779	30, 965				2, 414		34, 788
Withdrawn for transfer to manufacturing warehouse	6, 543	4, 433	25, 622				134, 868		171, 466
Lost by casualty, etc., during the year	7, 456	3, 023	8, 130	1	2, 479		86	14, 949	36, 123
Remaining in warehouse June 30, 1889	38, 608, 331	18, 562, 468	433, 684	719, 204	112, 090	133, 208	2, 622, 477	7, 320, 608	68, 512, 070
	56, 579, 938	26, 117, 148	11, 545, 837	2, 216, 995	1, 119, 029	1, 165, 690	31, 995, 141	19, 651, 750	150, 391, 528

The following table shows the quantity of distilled spirits in taxable gallons at 90 cents tax placed in distillery warehouses during the fiscal year ended June 30, 1889, the quantity withdrawn therefrom during the year, and the quantity remaining therein, or remaining unaccounted for at the beginning and close of the year:

SUMMARY OF OPERATIONS AT DISTILLERY WAREHOUSES DURING THE YEAR ENDED JUNE 30, 1889.

Distilled spirits—	Quantity.	Total.
	Gallons.	*Gallons.*
Actually remaining in warehouse July 1, 1888	61,030,236	
Outstanding balances on seven months' export bonds	2,782	
Not actually in warehouse, claimed to have been lost by casualty	131,520	
Withdrawn for exportation, proofs of landing not received	3,844,295	
Withdrawn for transfer to manufacturing warehouse, not yet received at warehouse	15,040	
		65,023,873
Produced from July 1, 1888, to June 30, 1889		89,358,510
Total		154,382,383
Withdrawn from warehouses, tax-paid	75,901,735	
Tax paid on deficiencies in export bonds and casualties disallowed	15,317	
Exported, proofs of landing received	2,147,462	
Allowed for loss by casualty	26,615	
Withdrawn for scientific purposes and for the use of the United States	34,788	
Allowed for loss by leakage or evaporation in warehouse	3,145,244	
Allowed for loss by leakage in transportation for export, etc	5,802	
Withdrawn for transfer to manufacturing warehouse and received at warehouse	161,736	
		81,438,799
Withdrawn for exportation, proof of landing not received	4,277,145	
Withdrawn for transfer to manufacturing warehouse not yet received at warehouses	24,350	
Not actually in warehouse, claimed to have been lost by casualty	130,019	
Outstanding balances on seven months' export bonds	2,782	
All other spirits remaining in warehouses June 30, 1889	68,509,288	
		72,943,584
Total		154,382,383

STOCK ON HAND, PRODUCTION, AND MOVEMENT OF SPIRITS FOR FIVE YEARS.

The following table shows the stock on hand, production, and movement of spirits for the fiscal years 1885, 1886, 1887, 1888, and 1889.

Distilled spirits—	1885.	1886.	1887.	1888.	1889.
	Gallons.	*Gallons.*	*Gallons.*	*Gallons.*	*allons.*
Actually in warehouses at beginning of fiscal year	63, 502, 551	54, 724, 916	58, 096, 621	65, 145, 269	61, 033, 018
Produced during fiscal year	74, 915, 363	80, 344, 380	77, 831, 599	70, 279, 500	89, 358, 510
Total	138, 417, 914	135, 069, 296	135, 928, 220	135, 424, 769	150, 391, 528
Withdrawn tax-paid during fiscal year	67, 649, 321	69, 096, 900	66, 183, 303	70, 541, 811	75, 901, 735
Withdrawn for exportation during fiscal year	10, 671, 118	5, 646, 656	2, 223, 913	1, 514, 205	2, 590, 285
Withdrawn for scientific purposes, for use of United States, for transfer to manufacturing warehouse, destroyed by fire, allowed for loss by leakage in warehouses, etc	5, 372, 559	2, 229, 120	2, 375, 735	2, 335, 735	2, 387, 488
Total	83, 692, 998	76, 972, 676	70, 782, 951	74, 391, 751	81, 879, 458
Remaining in warehouses at end of fiscal year	54, 724, 916	58, 096, 620	65, 145, 269	61, 033, 018	68, 512, 070

SPIRITS REMAINING IN WAREHOUSES AT THE CLOSE OF THE YEAR.

The following table shows the quantity of spirits remaining in distillery warehouses at the close of each of the twenty-one fiscal years during which spirits have been stored in such warehouses.

It will be observed that the quantity in warehouse June 30, 1879, is more than five million gallons greater than that in warehouse June 30, 1878; also that subsequently the quantity increased rapidly from year to year until June 30, 1882, since which date the quantity has been reduced so as to average during the past five years a little more than sixty million gallons. The causes of these fluctuations have been pointed out in previous annual reports of this office, the tendency of legislation since 1871 having been to encourage the deposit of spirits in such warehouses.

The acts of Congress believed to have had such a tendency are the internal-revenue laws passed on the following dates, viz:

June 6, 1872, raising the tax to 70 cents per gallon; March 3, 1875, raising the tax to 90 cents per gallon; March 28, 1878 (joint resolution), extending the bonded period to three years; May 28, 1880, authorizing allowance for loss in warehouse, etc.:

Date.	Quantity.	Date.	Quantity.
	Gallons.		*Gallons.*
Remaining June 30, 1869	16, 685, 166	Remaining June 30, 1880	31, 263, 869
Remaining June 30, 1870	11, 671, 886	Remaining June 30, 1881	64, 648, 111
Remaining June 30, 1871	6, 744, 860	Remaining June 30, 1882	89, 962, 645
Remaining June 30 1872	10, 103, 392	Remaining June 30, 1883	85, 499, 993
Remaining June 30, 1873	14, 650, 148	Remaining June 30, 1884	63, 502, 551
Remaining June 30, 1874	15, 575, 224	Remaining June 30, 1885	54, 724, 916
Remaining June 30, 1875	13, 179, 596	Remaining June 30, 1886	58, 096, 620
Remaining June 30, 1876	12, 595, 850	Remaining June 30, 1887	65, 145, 269
Remaining June 30, 1877	13, 091, 773	Remaining June 30, 1888	61, 033, 018
Remaining June 30, 1878	14, 088, 773	Remaining June 30, 1889	68, 512, 070
Remaining June 30, 1879	19, 212, 470		

NOTE.

It appears from the following table (on pages 152 and 153) that the quantity of spirits, tax or duty paid, held by wholesale liquor dealers and rectifiers October 1, 1889, was 15,255,882 gallons, the quantity so held October 1, 1888, being 14,828,371 gallons. The quantity of domestic and foreign spirits, respectively, and the aggregate held October 1, each year from 1878 to 1889, both inclusive, are as follows:

Year.	Domestic.	Foreign.	Total.
	Proof gallons.	*Proof gallons.*	*Proof gallons.*
1878	14, 480, 393	11, 401	14, 491, 794
1879	13, 014, 112	593, 506	13, 607, 618
1880	11, 666, 991	626, 692	12, 293, 683
1881	11, 065, 611	572, 797	11, 638, 408
1882	11, 505, 434	583, 992	12, 089, 426
1883	13, 345, 779	575, 703	13, 921, 482
1884	15, 139, 715	524, 491	15, 664, 206
1885	14, 760, 683	496, 109	15, 256, 792
1886	15, 523, 226	534, 094	16, 057, 320
1887	14, 003, 833	511, 126	14, 614, 959
1888	14, 341, 056	487, 315	14, 828, 371
1889	14, 815, 703	440, 179	15, 255, 882

SPIRITS IN HANDS OF WHOLESALE LIQUOR DEALERS

QUANTITY IN PROOF GALLONS OF TAX-PAID SPIRITS HELD BY WHOLESALE

	District.	All kinds, October 1, 1888.	Domestic.						
			Bourbon whisky.	Rye whisky.	Alcohol.	New England rum.	Gin.	High wines.	Pure, neutral, or cologne spirits.
1	Alabama	76,697	25,439	38,685	1,650	1,067	9,109	25	1,836
2	Arkansas	82,935	55,329	2,100	1,943	128	5,003	.....	44
3	First California	866,422	580,013	40,181	26,631	17,634	21,837	13,904	46,836
4	Fourth California	57,583	49,837	4,158	1,366	884	2,004	.....	3,063
5	Colorado	123,019	72,267	7,917	202	1,046	2,530	.....	1,001
6	Connecticut	229,644	140,719	66,508	3,055	16,104	17,300	1,298	5,972
7	Florida	8,155	3,419	3,389	.....	234	1,038	..	68
8	Georgia	77,511	7,863	24,119	169	3,548	5,092	80	640
9	First Illinois	607,733	605,173	66,037	19,061	10,248	16,576	97	79,693
10	Fifth Illinois	176,377	104,741	24,838	10,143	2,408	6,171	4	30,061
11	Eighth Illinois	71,718	61,745	5,437	1,966	757	2,553	.....	817
12	Thirteenth Illinois	19,603	13,088	1,554	85	121	557	60	142
13	Sixth Indiana	89,119	75,702	7,456	1,865	1,324	2,844	.....	1,071
14	Seventh Indiana	94,118	42,434	2,264	6,229	314	1,965	.....	12,364
15	Third Iowa	51,513	42,520	4,280	1,780	563	1,115	.....	143
16	Fourth Iowa	39,208	14,692	1,896	630	564	925	.....	115
17	Kansas	3,044	1,954	127	849	42	56	.....	.....
18	Second Kentucky	154,168	166,753	13,729	.....	25	390	.....	.....
19	Fifth Kentucky	825,207	1,046,498	98,626	6,455	1,084	2,724	.....	11,484
20	Sixth Kentucky	216,488	80,752	11,893	4,425	2,546	2,592	.....	52,586
21	Seventh Kentucky	104,698	97,018	10,587	46	50	568	37	.....
22	Eighth Kentucky	1,286	356	.....	.....	.....	.....	.....	.....
23	Louisiana	277,930	145,777	87,276	8,076	1,617	21,854	.....	10,618
24	Maryland	537,811	26,307	441,941	1,954	6,270	10,002	1,506	65,213
25	Third Massachusetts	1,000,776	659,028	161,850	66,553	111,548	27,550	328	62,532
26	First Michigan	134,576	88,877	16,666	7,212	3,722	4,978	40	5,286
27	Fourth Michigan	27,896	27,123	4,021	1,231	994	1,062	.....	.....
28	Minnesota	232,891	158,867	29,299	10,294	3,397	6,530	126	11,104
29	First Missouri	597,512	442,091	26,396	3,138	3,155	5,471	35	50,088
30	Sixth Missouri	426,434	310,509	23,176	3,049	2,111	6,639	49	8,291
31	Montana	92,020	109,923	7,523	1,025	1,075	2,734	.....	1,410
32	Nebraska	107,353	102,976	25,638	5,922	4,232	3,734	.....	1,368
33	New Hampshire	10,551	8,477	444	282	2,462	490	.....	2,024
34	First New Jersey	7,848	903	4,998	75	84	256	47	763
35	Fifth New Jersey	85,510	14,403	46,769	759	3,638	3,225	107	18,743
36	New Mexico	32,533	24,546	990	113	454	1,019	495	541
37	First New York	242,320	32,433	46,832	2,131	4,766	2,910	901	100,548
38	Second New York	1,103,478	287,934	481,673	68,518	27,836	20,161	2,831	214,765
39	Third New York	165,975	49,558	69,856	6,781	6,426	6,224	326	18,152
40	Fourteenth New York	142,520	58,148	27,613	22,188	4,479	4,482	388	29,757
41	Twenty-first New York	112,823	42,706	22,368	7,623	2,758	4,072	67	13,331
42	Twenty-eighth New York	220,442	47,558	97,947	6,771	3,989	5,020	315	37,273
43	Fourth North Carolina	3,808	233	1,418	.....	276	365	.....	.....
44	Fifth North Carolina	39,538	.....	1,154	.....	.....	12	.....	.....
45	First Ohio	991,549	638,574	137,841	8,702	5,832	11,993	1,836	14,931
46	Tenth Ohio	88,060	57,272	16,010	1,093	1,547	2,529	.....	5,482
47	Eleventh Ohio	80,144	55,099	17,644	1,146	754	3,773	.....	1,300
48	Eighteenth Ohio	154,194	92,594	53,903	4,238	2,792	7,102	93	6,256
49	Oregon	125,940	121,803	11,275	8,272	3,290	10,661	156	1,215
50	First Pennsylvania	2,062,773	22,189	655,762	151,711	11,470	14,752	2,929	16,741
51	Ninth Pennsylvania	39,905	2,481	32,161	417	883	374	554	.....
52	Twelfth Pennsylvania	36,924	5,109	14,974	840	1,274	2,131	172	6,073
53	Twenty-second Pennsylvania	239,794	34,140	344,217	2,231	1,918	6,984	215	25,492
54	South Carolina	72,137	2,025	29,156	31	1,945	5,247	3,942	.....
55	Second Tennessee	26,697	3,338	8,075	1,446	85	1,488	.....	947
56	Fifth Tennessee	312,146	48,879	22,008	4,640	413	3,367	.....	2,162
57	Third Texas	122,471	96,906	12,387	2,566	820	5,149	30	2,195
58	Fourth Texas	257,771	61,886	3,659	4,892	446	2,212	.....	2,135
59	Second Virginia	137,428	18,566	90,741	..	3,936	13,804	238	12,810
60	Sixth Virginia	21,403	2,810	19,420	45	371	300	.....	2,003
61	West Virginia	51,974	22,144	27,724	510	584	1,618	.....	4,012
62	First Wisconsin	286,033	141,547	23,929	7,315	4,087	6,317	4,745	20,879
63	Second Wisconsin	13,169	7,598	1,065	959	396	435	.....	437
		14,828,371	7,372,729	3,600,293	514,164	298,483	342,125	58,036	1,128,254

AND RECTIFIERS OCTOBER 1, 1888, AND OCTOBER 1, 1889.

LIQUOR DEALERS AND RECTIFIERS OCTOBER 1, 1888, AND OCTOBER 1, 1889.

Miscellaneous spirits.	Total.	Foreign.						Total.	Total domestic and foreign.	Number of wholesale liquor dealers.	Number of rectifiers.	
		Irish whisky.	Scotch whisky.	Jamaica rum.	St. Croix rum.	Holland gin.	Miscellaneous spirits.					
12, 814	97, 115	68	46	105	21	133	359	732	97, 847	29	2	1
12, 438	77, 985	.....	.....	45	.....	.....	229	274	78, 259	29	0	2
26, 435	788, 471	1, 468	3, 805	3, 320	286	12 569	16, 655	38, 043	827, 514	413	114	3
3, 885	65, 207	75	327	607	20	1, 018	883	2, 930	68, 137	41	10	4
8, 129	93, 092	222	728	698	103	711	1, 045	3, 507	96, 599	54	4	5
13, 524	264, 540	521	958	906	2, 252	3, 298	3, 199	11, 134	275, 674	73	17	6
1, 361	9, 509	.....	15	22	11	61	35	144	9, 653	10	0	7
20, 248	61, 699	63	179	335	112	365	755	1, 809	63, 508	44	5	8
52, 961	849, 346	1, 208	2, 219	3, 054	471	3, 786	9, 126	19, 864	869, 710	173	86	9
13, 550	191, 916	74	153	120	33	298	216	894	192, 810	27	8	10
8, 783	81, 358	6	36	79	.....	193	461	774	82, 132	30	1	11
2, 735	18, 342	19	45	8	.....	96	354	516	18, 858	5	3	12
10, 053	100, 315	60	148	171	26	439	377	1, 220	101, 535	36	9	13
4, 909	70, 489	5	6	23	.....	84	158	276	70, 765	21	3	14
3, 981	54, 382	43	94	95	.....	285	157	674	55, 056	13	4	15
4, 653	23, 485	2	51	211	20	77	247	608	24, 093	11	2	16
1, 963	4, 991	.....	.....	30	.....	22	28	80	5, 071	5	1	17
3, 390	184, 287	.....	.....	.....	.....	150	150	300	184, 587	15	3	18
12, 838	1, 199, 979	112	132	295	33	352	720	1, 644	1, 201, 623	87	38	19
48, 056	202, 850	25	50	79	.....	101	216	471	203, 321	52	6	20
1, 953	110, 259	50	40	47	.....	59	45	232	110, 491	18	1	21
.....	356	.....	.....	.....	.....	.....	.....	.....	356	1	0	22
67, 514	3 42, 732	295	189	1, 116	519	2, 178	4, 727	9, 024	351, 756	126	23	23
31, 996	5 85, 189	424	963	908	134	2, 571	3, 171	8, 171	593, 360	146	70	24
31, 181	1, 111, 570	5, 345	3, 550	6, 186	5, 186	15, 471	16, 968	52, 706	1, 164, 276	178	57	25
9, 671	135 452	402	499	810	181	405	981	3, 278	138, 730	35	7	26
4, 031	38, 482	20	22	11	.....	287	117	457	38, 939	12	1	27
27, 714	247, 331	305	697	1, 422	411	914	2, 807	6, 556	253, 887	50	15	28
37, 100	567, 474	298	563	904	159	1, 863	3, 203	6, 990	574, 464	104	37	29
22, 325	376, 749	565	890	1, 266	645	1, 329	2, 335	7, 030	383, 779	66	10	30
9, 211	132, 901	161	349	846	55	391	1, 200	3, 002	135, 903	59	5	31
21, 150	165, 020	5, 874	258	950	24	774	3, 747	11, 627	176, 647	58	3	32
852	15, 031	42	39	20	22	234	98	455	15, 486	9	1	33
888	8, 074	.....	15	34	18	175	191	433	8, 507	11	2	34
16, 840	104. 484	447	955	1, 035	111	1, 754	2, 811	7, 113	111, 597	50	19	35
2, 997	31, 185	40	50	122	30	155	864	1, 261	32, 446	30	3	36
7, 031	197, 552	4, 321	5, 272	2, 882	662	8 991	3, 433	25, 561	223, 113	48	14	37
71, 695	1, 195, 411	5, 731	10, 756	9, 242	6, 483	20, 636	81, 982	84, 830	1, 280, 241	341	120	38
14, 304	171, 609	1, 461	3, 271	2, 842	2, 705	3, 633	14, 156	28, 068	199, 677	125	32	39
24, 089	171, 144	458	925	1, 167	924	3, 210	1, 726	8, 410	179, 554	89	18	40
7, 354	100, 279	161	397	510	185	1, 146	2, 501	4, 900	105, 179	37	17	41
32, 157	231, 030	377	653	873	292	1, 559	2, 579	6, 333	237, 363	108	29	42
1, 506	3, 798	15	.....	.....	.....	22	.....	37	3, 835	5	1	43
9, 284	10, 450	.....	.....	.....	.....	.....	11	11	10, 461	6	9	44
109, 706	1, 056, 419	435	725	1, 087	225	2, 855	2, 700	8, 027	1, 064, 446	151	59	45
10, 809	94, 953	2	93	241	.....	210	681	1, 227	96, 180	14	13	46
7, 173	87. 071	25	241	194	170	506	456	1, 591	88, 662	36	7	47
16, 744	183, 766	389	231	699	29	530	873	2, 751	186, 517	57	7	48
12, 476	179, 189	215	596	1, 802	20	1, 334	1, 289	5, 256	184, 445	54	8	49
166, 888	1, 199, 956	2, 108	5, 302	4, 938	858	10, 437	9, 468	33, 111	1, 238, 067	192	132	50
4, 295	41, 165	37	7	3	1, 444	35	93	1, 619	42, 784	26	9	51
4, 848	35, 421	38	341	235	20	682	721	2, 037	37, 458	28	12	52
34, 381	449, 578	621	845	999	91	1, 555	1, 875	5, 986	455, 564	70	34	53
22, 959	65, 675	15	140	312	46	356	429	1, 298	66, 973	14	.....	54
9, 627	25, 006	.....	.....	25	.....	12	.....	37	25, 043	5	2	55
79, 521	161, 970	122	97	247	32	816	.....	1, 314	163, 284	39	16	56
11, 310	131, 373	86	99	371	144	561	860	2, 121	133, 494	41	1	57
18, 613	91, 843	99	121	99	104	100	174	697	92, 540	10	2	58
20, 430	160, 615	8	15	81	.....	750	1, 305	2, 159	162, 774	29	10	59
1, 716	27, 290	45	10	10	.....	119	15	199	27, 489	8	5	60
7, 880	64, 502	.....	130	74	.....	159	174	537	65, 039	6	5	61
44, 327	253, 746	203	643	1, 653	179	1, 518	3, 549	7, 745	261, 491	79	35	62
855	11, 745	40	27	21	.....	.....	.....	88	11, 833	12	2	63
1, 321, 609	14, 815, 703	35, 191	49, 008	56, 487	25, 495	114, 314	159, 684	440, 179	15, 255, 882	3, 742	1, 160	

PRODUCTION AND WITHDRAWAL OF TAX-PAID SPIRITS DURING THREE MONTHS OF CURRENT FISCAL YEAR.

QUANTITY IN TAXABLE GALLONS OF SPIRITS PRODUCED AND WITHDRAWN TAX PAID AND THE AMOUNT OF TAX PAID DURING THE MONTHS OF JULY, AUGUST, AND SEPTEMBER, 1889.

States.	July, 1889.			August, 1889.			September, 1889.		
	Produced.	Withdrawn.	Tax paid.	Produced.	Withdrawn.	Tax paid.	Produced.	Withdrawn.	Tax paid.
Arkansas	3,802	3,898	$3,508.20	729	4,459	$4,013.10	254	3,979	$3,581.10
California	4,619	1,993	1,793.70	5,321	2,142	1,927.80	5,195	5,929	5,336.10
Connecticut	5,900	6,544	5,889.60	6,116	6,501	5,850.90	5,702	7,659	6,893.10
Georgia	22,150	17,599	15,839.10	15,504	20,849	18,764.10	18,225	25,519	22,967.10
Illinois	2,062,697	2,345,755	2,111,179.50	1,948,027	2,958,288	2,662,459.20	2,129,965	2,546,441	2,291,796.90
Indiana	430,587	420,413	378,371.70	361,732	417,269	375,542.10	521,733	547,880	493,092.00
Iowa		82	73.80		122	109.80		81	72.90
Kentucky	801,630	1,840,087	1,656,078.30	304,558	1,849,598	1,664,638.20	288,401	1,173,234	1,055,910.60
Maryland	88,257	109,092	98,182.80	30,878	138,516	124,664.40	68,058	107,551	96,795.90
Massachusetts	89,468	77,633	69,869.70	52,927	64,568	58,111.20	107,891	87,262	78,535.80
Minnesota	245,602	266,391	239,751.90	256,742	270,191	243,171.90	270,930	267,070	240,363.00
Missouri	120,736	208,350	187,515.00	136,039	240,110	216,099.00	121,368	211,242	190,117.80
Nebraska	121,763	192,972	173,677.80	123,957	232,079	208,871.10	164,378	204,355	183,919.50
New Hampshire	2,825	1,954	1,668.60	2,829	2,254	2,028.60	2,586	2,296	2,066.40
New Jersey	27,456	9,541	8,586.90	18,416	10,675	9,607.50	16,467	12,899	11,609.10
New York	160,195	158,974	143,076.60	166,672	144,083	129,674.70	148,140	121,511	109,359.90
North Carolina	88,599	28,896	26,006.40	33,026	50,321	45,288.90	81,127	47,226	42,503.40
Ohio	432,340	461,454	415,308.60	407,631	452,503	407,252.70	500,839	643,239	578,915.10
Oregon		1,061	954.90		105	94.50			
Pennsylvania	269,505	252,115	226,903.50	151,849	240,211	216,189.90	297,235	232,179	208,961.10
South Carolina	1,315	463	416.70	880	1,512	1,360.80	807	934	840.60
Tennessee	135,732	48,058	43,252.20	130,529	65,979	59,381.10	115,301	59,668	53,701.20
Texas	125	325	292.50		366	329.40		132	118.80
Virginia	10,023	11,326	10,193.40	4,839	11,457	10,311.30	5,073	9,174	8,256.60
West Virginia	200	34,662	31,195.80	190	16,354	14,718.60	23,161	11,688	10,519.20
Wisconsin	40,974	38,396	34,556.40	39,998	47,817	43,035.30	39,915	51,191	46,071.90
Total	5,116,500	6,527,934	5,874,140.60	4,199,389	7,248,329	6,523,496.10	4,872,701	6,380,339	5,742,305.10
Quantity for same months in 1888	3,960,296	5,679,879	5,111,891.10	8,095,154	6,174,417	5,556,975.30	4,279,490	6,054,271	5,448,843.90

ITS IN DISTILLERY WAREHOUSES OCTOBER 1, 1884, 1885, 1886, 1887, 1888, and 1889.

e following is a statement of the quantities of spirits remaining in llery warehouses October 1, 1884, 1885, 1886, 1887, 1888, and 1889, ctively:

States.	1884.	1885.	1886.	1887.	1888.	1889.
	Gallons.	*Gallons.*	*Gallons.*	*Gallons.*	*Gallons.*	*Gallons.*
na	2,400	1,847	190		294	
sas	40,422	38,076	37,603	28,074	24,929	52,729
nia	124,184	42,957	22,071	26,322	8,481	9,371
do						
ticut	13,543	20,412	15,210	15,946	14,183	18,496
are		708	459			
a	39,220	41,958	36,961	32,506	54,544	82,880
s	1,535,527	1,383,131	1,575,318	2,018,821	1,825,883	2,126,913
a	968,910	1,239,890	1,290,801	1,241,119	1,392,774	1,956,806
	81,892	48,798	60,438	18,470	1,798	864
s	11,020	12,676	9,216			
cky	35,351,017	29,558,919	34,079,071	39,609,736	31,338,206	36,694,640
and	2,647,133	2,944,563	3,994,036	4,060,325	3,789,526	3,464,683
chusetts	542,832	537,851	616,863	656,049	581,431	624,762
sota						51,381
na	2,796	446				
ri	262,349	208,600	303,142	343,342	295,010	286,611
ska	130,942	81,913	186,990	195,254	96,404	188,358
Hampshire	31,282	34,080	29,942	28,493	27,408	31,572
ersey	187,170	61,836	199,563	223,313	292,178	436,308
York	302,127	439,547	528,604	423,118	288,903	321,392
Carolina	189,362	88,953	126,961	121,995	183,064	227,807
	2,036,127	2,120,167	2,439,413	3,036,518	2,887,060	3,217,098
	8,383	16,058	18,078	19,967	14,277	9,885
Ivania	6,723,169	6,140,093	6,629,889	7,740,718	8,043,986	9,356,083
Carolina	17,262	10,149	14,631	16,257	13,854	16,656
see	1,408,658	1,133,935	992,961	735,678	811,020	1,342,835
	7,033	8,498	11,538	8,483	7,853	4,500
a	248,951	234,006	218,626	148,646	145,814	214,312
Virginia	667,972	614,158	804,624	761,546	677,708	584,306
sin	167,563	94,113	60,379	96,721	87,037	57,451
Totals	53,749,246	47,158,358	54,303,818	61,608,377	52,554,625	61,351,697

ITS WITHDRAWN FOR EXPORT DURING FIRST THREE MONTHS OF PRESENT FISCAL YEAR.

MENT SHOWING BY DISTRICTS THE NUMBER OF GALLONS OF EACH KIND OF ITS REMOVED FOR EXPORT DURING THE MONTHS JULY, AUGUST, AND SEPBER, 1889.

District.	Bourbon whisky.	Rye whisky.	Alcohol.	Rum.	Gin.	Pure, neutral, or cologne spirits.	Miscellaneous.	Total.
Illinois			49,587			35,042	447	85,026
Kentucky	7,186							7,186
Kentucky	25,551	244						25,795
Kentucky	406	5,255		129			1,595	7,385
th Kentucky	17,219	5,138						22,357
a Kentucky	15,417							15,417
and		13,067						13,067
Massachusetts			79,542					79,542
sota			6,651					6,651
New York				1,058				1,058
Ohio	39	39						78
ty-third Pennania		4,878						4,878
tal	65,818	28,621	56,188	79,671	1,058	35,042	2,042	268,440

COMPARATIVE STATEMENT WITH PREVIOUS YEARS.

Following is a statement showing, by districts, the quantity in taxable gallons of spirits withdrawn for export during the four months ended October 31, in the year 1882, and during the three months ended September 30, 1883, 1884, 1885, 1886, 1887, 1888, and 1889:

Districts.	1882.	1883.	1884.	1885.	1886.	1887.	1888.	1889.
1st California	2,526	268	879				88	
1st Illinois		6,680	6,629		6,890			
5th Illinois	30,388	125,771	49,532	100,167	270,980	43,889	57,863	85,026
8th Illinois				6,457				
4th Indiana		16,593						
6th Indiana				1,131	20,658	2,389		
7th Indiana	19,712	42,995						
2d Iowa		91,070	93,617		32,538			
2d Kentucky	878	19,307	257,287	143,246			3,318	7,186
5th Kentucky	1,777	110,329	877,852	283,755	422	1,185	1,046	25,795
6th Kentucky	2,446	38,170	241,449	137,863	1,110	1,184	1,463	7,385
7th Kentucky	694	102,711	737,318	317,721	7,476	8,042	11,879	22,357
8th Kentucky		22,750	157,954	207,531			3,234	15,417
3d Maryland	11,230	28,261	57,837			1,124	25,533	13,067
3d Massachusetts	71,663	126,885	194,228	229,916	319,593	197,680	129,834	79,542
5th Massachusetts	337,868	451						
Minnesota								4,651
1st Missouri			905					
6th Missouri		436	5,151	3,937	28,079		5,176	
Nebraska				893	7,828	52,102		
1st New York					456	1,304		1,058
1st Ohio				425	78		220	78
6th Ohio		4,398	30,582	29,151				
1st Pennsylvania		3,864			118		34	
9th Pennsylvania			6,617					
22d Pennsylvania	10,619	9,672	90,918	32,513	81			
23d Pennsylvania	3,772	1,848	40,893	21,145		9,406	442	4,878
5th Tennessee			4,759			14,128		
West Virginia			13,083		4,947			
1st Wisconsin				11,014				
Total	493,573	752,389	2,867,351	1,526,865	701,263	332,443	238,185	268,449

SUMMARY OF OPERATIONS AT SPECIAL BONDED WAREHOUSES.

The following statement shows the quantity of fruit brandy placed in special bonded warehouses, withdrawn therefrom, and remaining therein at the beginning and close of the fiscal year ended June 30, 1889:

DR.

	Gallons.	Gallons.
Balance withdrawn for export and not accounted for July 1, 1888	8,413	
Balance reported lost by casualty and not accounted for July 1, 1888	45	
Balances withdrawn for transfer from producing districts to other districts and not accounted for July 1, 1888	186,011	
Balance remaining in warehouses July 1, 1888, including 761 gallons in transit between warehouses in 1st California	974,330	
		1,168,799
Deposited in special bonded warehouses during the year:		
Received from distillers in same district	795,606	
Received from distillers in other districts	156,752	
Received from special bonded warehouses in other districts	380,920	
		1,333,278
Total		2,502,077

CR.

	Gallons.	Gallons.
drawn from special bonded warehouses during the year, tax-d	495,723	
allowed on account of leakage or evaporation in warehouse.	29,055	
drawn for use of United States	114	
aid on deficiencies in export	11	
rted and accounted for	8,260	
sited in manufacturing warehouses	898	
sited in second special bonded warehouses in other districts.	356,496	
		890,557
drawn for export and unaccounted for June 30, 1889	115,672	
rted lost by casualty and unaccounted for June 30, 1889	50	
drawn for transfer to special bonded warehouses in other ricts and unaccounted for June 30, 1889	79,372	
ining in special bonded warehouses at close of fiscal year ed June 30, 1889	1,416,426	
		1,611,520
Total		2,502,077

e following statement gives the history of fruit brandy withdrawn special bonded warehouses for export and for other purposes other upon payment of the tax, the brandy reported as accounted for ng been landed abroad, received into another warehouse, or dis-l of otherwise, in accordance with the conditions of the bond:

tation:	Gallons.	Gallons.
Withdrawn for export and not accounted for July 1, 1888	8,413	
Withdrawn for export during the year	115,530	
		123,943
Withdrawn for export and accounted for during the year	8,260	
ax paid on deficiencies in export	11	
Withdrawn for export and unaccounted for June 30, 1889	115,672	
		123,943
alty:		
eported lost by casualty and not accounted for July 1, 1888	45	
eported lost by casualty during the year	5	
		50
ost by casualty and remaining unaccounted for June 30, 1889	50	
		50
facturing warehouses:		
Withdrawn for transfer to manufacturing warehouses during the year	898	
		898
eposited in manufacturing warehouses during the year	898	
		898
sfers in same district:		
Withdrawn for transfer to second warehouse in same district and not accounted for July 1, 1888	761	
Withdrawn for transfer to second warehouse in same district during the year	38,430	
		39,191
Deposited in second warehouse in same district during the year.	39,191	
		39,191
sfers to other districts:		
Withdrawn for transfer to other districts and not accounted for July 1, 1888	186,011	
Withdrawn for transfer to other districts during the year	249,857	
		435,868
Deposited in other districts during the year	356,496	
Withdrawn for transfer to other districts and unaccounted for June 30, 1889	79,372	
		435,868

Of the quantity in warehouses June 30, 1889, 592,138 gallons were in the following warehouses in the first district of California:

No. 1. Bode & Haslett	107,837
No. 2. Juan Bernard	24[illegible],103
No. 3. Geo. C. Carlon	[illegible],344
No. 4. James M. Tiernan	5[illegible],796
No. 5. Snyder & Foss Warehouse Company	4[illegible],044
No. 6. Mitchell, Collins & Sperry	10[illegible],965
No. 7. Fresno Warehouse Company	3[illegible],049

Four hundred and fifty-one thousand five hundred and eighteen gallons were in the following warehouses in the fourth district of California:

No. 1. Thomas J. Clunie	82,159
No. 2. Luther W. Burris	56,715
No. 3. Frank Pellet	100,695
No. 4. John Tivnen	17,205
No. 5. Henry B. Shackelford	165,714
No. 6. Albert Edward Hatt, sr	29,031

Two hundred and twenty-three thousand five hundred and eighty-two gallons were in the following warehouses in the second district of New York:

No. 1. J. D. W. Sherman	193,595
No. 2. Robert J. Dean	29,987

Twenty-nine thousand three hundred and one gallons were in the following warehouse in the first district of Illinois:

No. 8. Hiram W. Sibley	29,301

Sixteen thousand eight hundred and sixty gallons were in the following warehouse in the tenth district of Ohio:

No. 1. Hugo F. Engels	16,860

One thousand two hundred and thirty-two gallons were in the following warehouse in the fourth district of North Carolina:

No. 1. Benjamin R. Taylor	1,232

Two thousand three hundred and seventy-one gallons were in the following warehouse in Maryland:

No. 1. Baltimore and Ohio Railroad Company	2,371

Eleven thousand seven hundred and two gallons were in the following warehouse in the first district of Missouri:

No. 1. Ewald Lungstras	11,702

Thirty-four thousand four hundred and fifty-nine gallons were in the following warehouses in the fifth district of Kentucky:

No. 1. T. H. Sherley & Co	31,540
No. 2. Louisville Public Warehouse Company	2,919

And fifty-three thousand two hundred and sixty-three gallons were in the following warehouses in the fifth district of Tennessee:

No. 1. Frank M. Smartt	35,315
No. 2. N. B. Williams	17,948

Under the provisions of an act approved October 12, 1888, authority was conferred upon distillers of brandy made of apples and peaches to deposit their products in special bonded warehouses, this privilege having until that time been confined to distillers of brandy from grapes exclusively.

This law, having been passed after the distilling season had commenced, was not very generally taken advantage of by the distillers on whose behalf it was enacted.

Of the quantity, 1,416,426 gallons of brandy, remaining in special bonded warehouses June 30, 1889, there were, however, 91,219 gallons of apple brandy and 2,510 gallons of peach brandy.

The quantity of fruit brandy of all kinds withdrawn from distilleries during the year to be deposited in special bonded warehouses was 991,832 gallons.

The quantity withdrawn in each State is shown in the following table:

	Gallons.
California	875,619
Kentucky	27,961
Maryland	8,156
New Jersey	1,416
New York	8,882
Ohio	14,708
Tennessee	55,090
Total	991,832

DISTILLED SPIRITS IN THE UNITED STATES OCTOBER 1, 1889.

The quantity of distilled spirits in the United States, except what may be in customs bonded warehouses, on the 1st day of October, 1889, was 102,650,982 gallons, this quantity being distributed as follows:

	Gallons.
In distillery and special bonded warehouses	62,674,200
In hands of wholesale liquor dealers	15,255,882
In hands of retail liquor dealers	24,720,900
Total	102,650,982

In making the above computation the average stock of each retail liquor dealer in the United States is estimated at 150 gallons.

EXPORTATION OF MANUFACTURED TOBACCO AND SNUFF IN BOND.

The subjoined table shows, as removed and unaccounted for July 1, 1888, and June 30, 1889, the quantity in pounds of manufactured tobacco and snuff which had been removed for exportation in bond, and concerning which the proof of exportation required by law had not been furnished prior to the dates named therein:

	Pounds.
1. Removed and unaccounted for July 1, 1888:	
Tobacco at 8 cents tax, removed under exportation bonds	1,296,672
2. Removed during the year ended June 30, 1889:	
Tobacco at 8 cents tax, under exportation bonds	13,622,410¼
Total	14,919,082¼
3. Exported and accounted for during the year:	
Tobacco at 8 cents tax, under exportation bonds	13,853,892¼
Tobacco at 8 cents tax, paid on deficiencies	4,485
Total	13,858,377¼
4. Remaining unaccounted for at the close of the fiscal year ended June 30, 1889	1,060,704¼
Total	14,919,082¼

EXPORTATION OF CIGARS AND CIGARETTES IN BOND.

	Number of cigars at $3 per 1,000.	Number of cigarettes at 50 cents per 1,000.
1. Removed and unaccounted for July 1, 1888	44,500	12,704,500
2 Removed during the year ended June 30, 1889	1,699,325	246,679,750
Total	1,743,825	259,384,250
3. Exported and accounted for during the year ended June 30, 1889	1,530,550	241,106,750
4. Remaining unaccounted for at the close of the fiscal year ended June 30, 1889	213,275	18,277,500
Total	1,743,825	259,384,250

DRAWBACK ALLOWED ON EXPORTED MERCHANDISE.

STATEMENT OF DRAWBACK OF INTERNAL-REVENUE TAXES ALLOWED ON EXPORTED MERCHANDISE DURING THE FISCAL YEAR ENDED JUNE 30, 1889.

Port.	Number of claims.	Tobacco.	Cigars and cigarettes.	Fermented liquors.	Distilled spirits.	Stills.	Total.
Boston	25	$200.00	.....	$377.16	.....	.....	$577.16
Brashear	1	.....	.....	37.00	.....	.....	37.00
Eagle Pass	17	.....	.....	601.26	.....	.....	601.26
Milwaukee	182	.....	.....	7,317.61	.....	.....	7,317.61
New Orleans	92	114.40	$111.90	1,188.36	$315.00	.....	1,729.66
New York	497	460.16	.....	5,898.01	5,564.70	$80.00	12,002.87
Philadelphia	18	.....	.....	749.27	.....	.....	749.27
Savannah	3	28.00	36.00	.....	.....	.....	64.00
St. Louis	159	.....	.....	6,350.45	.....	.....	6,350.45
San Francisco	286	2,635.08	1,268.65	3,114.21	4,857.30	.....	11,875.24
Total	1,280	3,437.64	1,416.55	25,633.33	10,737.00	80.00	41,304.52

RECAPITULATION OF DRAWBACK OF INTERNAL-REVENUE TAXES ALLOWED DURING THE FISCAL YEARS 1863 TO 1889, INCLUSIVE.

Period.	Number of claims.	Proprietary articles.	Tobacco.	Snuff.	Cigars and cigarettes.
Allowed, 1863 to 1876, inclusive	.....	.....	.....	.....	.....
Allowed, 1877	751	$48,236.85	$5,819.32	.....	.....
Allowed, 1878	562	33,820.54	2,537.98	.....	.....
Allowed, 1879	744	43,184.71	12,113.86	.....	$250.20
Allowed, 1880	872	35,153.86	22,314.02	.....	1,094.97
Allowed, 1881	749	28,483.87	8,596.60	$26.08	1,232.43
Allowed, 1882	909	33,695.22	5,069.36	.....	1,406.13
Allowed, 1883	1,130	33,000.89	5,604.60	.....	5,195.37
Allowed, 1884	1,090	16,460.34	6,053.81	82.00	5,673.96
Allowed, 1885	706	46.66	2,515.80	.....	901.75
Allowed, 1886	800	.....	3,582.13	1.60	661.25
Allowed, 1887	877	.....	5,270.54	.....	968.62
Allowed, 1888	1,222	.....	5,584.00	.....	703.25
Allowed, 1889	1,280	.....	3,437.64	.....	1,416.55

Period.	Fermented liquors.	Distilled spirits.	Stills.	Miscellaneous.	Total.
Allowed 1863 to 1876, inclusive	.....	.....	.....	.....	$6,673,845.00
Allowed, 1877	$760.12	.....	.....	a$277.11	55,092.40
Allowed, 1878	46.25	$718.90	.....	.....	37,123.67
Allowed, 1879	533.69	1,426.92	.....	.....	57,509.38
Allowed, 1880	2,205.42	.....	$80.00	b888.00	61,736.27
Allowed, 1881	1,128.38	1,161.90	220.00	.....	40,849.26
Allowed, 1882	3,913.18	1,166.50	60.00	.....	46,110.38
Allowed, 1883	6,034.16	4,608.00	60.00	c590.92	55,093.94
Allowed, 1884	14,996.30	8,352.00	480.00	.....	52,096.41
Allowed, 1885	16,192.71	3,705.30	.....	.....	23,362.22
Allowed, 1886	23,878.21	6,642.00	.....	.....	34,765.19
Allowed, 1887	21,238.94	5,755.50	140.00	.....	33,373.60
Allowed, 1888	26,166.54	28,411.30	160.00	.....	61,625.09
Allowed, 1889	25,633.33	10,737.00	80.00	.....	41,304.52
Total	.....	.....	.....	.....	7,273,289.33

a Manufactured cotton exported prior to 1868. b Machinery exported prior to 1868.
c Chairs exported prior to 1868.

OLEOMARGARINE.

The following statements, showing operations under the act of August 2, 1886, defining butter and imposing a tax upon and regulating the manufacture, sale, importation, and exportation of oleomargarine, comprise—

First. A summary of operations at oleomargarine manufactories during the fiscal year ended June 30, 1889; also a summary of operations during the past two fiscal years, and by months covering the period from November 1, 1886, to June 30, 1889; also a statement of the quantity of oleomargarine in the United States June 30, 1889.

Second. A statement of the receipts from all classes of taxes imposed by the oleomargarine law for the year ended June 30, 1889.

Third. A statement, by States and Territories and in the aggregate, of all persons who paid taxes as manufacturers of and dealers in oleomargarine; also in aggregate of all persons who paid oleomargarine special taxes for the year ended May 1, 1888.

Fourth. A statement, by districts, of the number of retail dealers in oleomargarine doing business in April, 1888, and April, 1889, respectively.

Fifth. A statement as to the location of oleomargarine manufactories in April, 1889, also of wholesale dealers in oleomargarine at that time.

Sixth. The report of the analytical chemist.

Seventh. The report of the microscopist.

Eighth. Reports of examinations by collectors with internal-revenue microscopes.

Ninth. A statement of the quantity of oleo oil exported.

It appears from the subjoined tables that the average monthly production of oleomargarine during the fiscal year was 2,972,002 pounds; that the average monthly production for the previous year was 2,860,460 pounds, and that the average monthly production during the eight months ended June 30, 1887, was 2,711,828 pounds. It also appears that the average monthly quantity withdrawn from factories on payment of the tax was as follows:

	Pounds.
During the eight months ended June 30, 1887	2,592,946
During the fiscal year ended June 30, 1888	2,707,430
During the fiscal year ended June 30, 1889	2,821,970

The quantity withdrawn monthly for export also appears to have been as follows:

	Pounds.
During the eight months ended June 30, 1887	90,566
During the fiscal year ended June 30, 1888	140,516
During the fiscal year ended June 30, 1889	145,746

These figures show an increase from year to year in the production both for consumption at home and abroad.

In the fiscal years 1887 and 1888 the largest producing month was March, and in the fiscal year 1889 the largest production was in December, the quantity produced in these months being as follows:

	Pounds.
In March, 1887	3,568,254
In March, 1888	3,940,727
In December, 1888	4,181,317

The months in which the production fell below 2,000,000 pounds were May, June, and July, 1887, and June, 1889, the product of July, 1887, being the smallest, viz, 1,208,638 pounds.

There was an increase in the number of persons engaged in the sale of oleomargarine during the fiscal year ended June 30, 1889, as well as an increase in the production of the article.

The number of persons in business during April, 1887, 1888, and 1889, was as follows:

	1887.	1888.	1889.
Manufacturers	32	29	23
Wholesale dealers	236	154	160
Retail dealers	3,929	3,279	3,906
	4,197	3,462	4,089

The microscopes with polarizing attachments referred to on page CXLV of the report of this office for the fiscal year ended June 30, 1888, were procured and distributed among collectors during the present year, and these officers have reported the result of examinations in 1,251 cases, as shown in one of the following statements. It is expected that a larger number of examinations will be made and a more complete test of the instrument secured under amended regulations now in the hands of the printer. One good effect of the use of the instrument observed is the diminution in the number of the samples of substances forwarded to this office, suspected of being oleomargarine, which upon a chemical analysis were discovered to be butter.

I take great pleasure in calling attention to the last two reports of my predecessor, Hon. Joseph S. Miller, for copies of European laws on the subject of oleomargarine. These copies were obtained through the courtesy of the Department of State in response to the inquiry of this Department under date of July 7, 1888. The only additional response received to date is that subjoined, dated June 11, 1889, which indicates that the set of laws relating to this subject otherwise than in connection with the subject of food adulteration is quite complete. (See copies of laws given in this report under the title "Adulteration of Food and Drugs.")

DEPARTMENT OF STATE,
Washington, June 11, 1889.*

SIR: I have the honor to say in further answer to the letter of your Department of July 7, 1888, that according to a dispatch (No. 30) from St. Petersburg, there are at present no laws or regulations in Russia on the subject of artificial butter.

I have the honor to be, sir, your obedient servant,

JAMES G. BLAINE.

The SECRETARY OF THE TREASURY.

The following table shows the quantity of oleomargarine, in pounds, at 2 cents tax, produced at manufactories during the fiscal year ended June 30, 1889, the quantity withdrawn therefrom during the year, and the stock of oleomargarine remaining in factories June 30, 1889.

SUMMARY OF OPERATIONS AT OLEOMARGARINE MANUFACTORIES DURING THE FISCAL YEAR ENDED JUNE 30, 1889.

Stock on hand July 1, 1888		315,900
Removed for export and remaining unaccounted for July 1, 1888		411,676
		727,576
Produced during the year		35,664,026
Total		36,391,602

* See page 217 *post* for copy of ordinance passed subsequently to this date.

Oleomargarine withdrawn from factories, tax-paid	33,863,642	
Oleomargarine lost or destroyed in manufactories	1,992	
Withdrawn from manufactories for export and accounted for	2,005,050	
		35,870,684
Removed for export not accounted for, June 30, 1889	155,521	
Remaining in manufactories June 30, 1889	365,397	
		520,918
Total		36,391,602

OPERATIONS IN OLEOMARGARINE DURING THE LAST TWO FISCAL YEARS.

The following statement by districts shows the quantity in pounds of oleomargarine produced at manufactories, the quantity withdrawn therefrom, tax-paid, and for export, and the quantity lost or destroyed at manufactories during the two fiscal years ended June 30, 1888, and June 30, 1889, respectively; also the stock remaining on hand at the close of each year.

Districts.	From July 1, 1887, to June 30, 1888.				
	Produced.	Tax-paid.	Exported.	Lost or destroyed.	Remaining in factory June 30, 1888.
Colorado	266,365	264,841			3,148
Connecticut	6,713,021	6,202,803	306,989	4,357	140,598
First Illinois	17,876,127	17,601,148	242,204	5,206	82,094
Sixth Indiana	3,935,316	3,928,544	4,521		42,787
Kansas	1,848,040	1,855,774			7,818
Maryland					
Third Massachusetts	657,712	655,330	16,591		7,138
Twenty-eighth New York	99,677	102,108			
Eleventh Ohio	142,364	139,914			2,450
Eighteenth Ohio	1,358,452	1,357,363			1,462
First Pennsylvania	1,428,453	380,340	1,025,893		28,405
	34,325,527	32,489,165	1,686,198	9,563	315,900

Districts.	From July 1, 1888, to June 30, 1889.				
	Produced.	Tax-paid.	Exported.	Lost or destroyed.	Remaining in factories June 30, 1889.
Colorado	146,016	141,926			7,238
Connecticut	6,658,469	6,551,723	166,415	992	70,937
First Illinois	18,523,172	17,951,204	567,545		86,517
Sixth Indiana	4,126,393	4,061,969			107,211
Kansas	2,298,685	2,287,903		1,000	17,600
Maryland	56,780	46,690	10,200		
Third Massachusetts	561,143	515,595	36,427		16,259
Twenty-eighth New York					
Eleventh Ohio	201,805	204,070			185
Eighteenth Ohio	1,794,775	1,793,083			8,154
First Pennsylvania	1,296,788	309,421	968,366		47,296
	35,664,026	33,863,584	1,748,953	1,992	365,397

STATEMENT SHOWING THE QUANTITY OF OLEOMARGARINE PRODUCED, WITHDRAWN TAX-PAID, FOR EXPORT, AND LOST OR DESTROYED IN MANUFACTORIES, MONTHLY, FROM NOVEMBER 1, 1886, to JUNE 30, 1889.

Month.	Quantity produced.	Withdrawn tax-paid.	Lost or destroyed.	Withdrawn for export.	On hand June 30, 1889.
	Pounds.	*Pounds.*	*Pounds.*	*Pounds.*	*Pounds.*
On hand November 1, 1886	181,090				
November	3,188,261	2,986,241	10,878	6,747	
December	3,073,263	2,956,827	290	67,189	
1887.					
January	2,804,096	2,720,235	3,056	144,535	
February	2,779,855	2,716,759	9,182	60,500	
March	3,568,254	3,512,138	12,472	96,499	
April	2,839,358	2,780,307	6,866	149,838	
May	1,885,027	1,769,954	2,210	136,523	
June	1,375,423	1,301,108	6,267	62,701	
July	1,208,638	1,170,136	1,191	33,240	
August	2,425,226	2,296,238	601	110,990	
September	2,703,256	2,568,007	262	68,917	
October	3,082,935	2,915,016	1,979	92,201	
November	3,003,715	2,862,321		148,899	
December	3,256,028	3,120,393		78,500	
1888.					
January	3,058,955	2,918,868		117,781	
February	3,057,149	3,003,515		126,168	
March	3,940,727	3,824,672	2,998	155,761	
April	3,273,453	3,062,396	1,587	251,994	
May	3,185,127	2,817,292		327,726	
June	2,130,318	1,930,311	995	174,021	
July	2,084,317	1,925,762	135	155,260	
August	2,301,769	2,209,782	727	153,285	
September	2,776,405	2,611,693		167,787	
October	3,462,123	3,368,418		80,785	
November	3,734,878	3,569,408		175,965	
December	4,181,317	4,025,336	10	109,285	
1889.					
January	3,607,753	3,353,350		137,123	
February	3,523,381	3,266,245	1,000	228,191	
March	3,047,875	3,077,831		70,424	
April	3,057,841	2,886,481		285,948	
May	2,310,945	2,114,678	70	126,223	
June	1,575,362	1,514,658		58,579	
On hand June 30, 1889					365,397
Total	91,684,180	87,096,376	62,782	4,159,625	365,397

STATEMENT SHOWING THE QUANTITY OF OLEOMARGARINE IN THE UNITED STATES JUNE 30, 1889.

Oleomargarine—	Packages.	Pounds.
In hands of manufacturers	14,986	365,397
In hands of wholesale dealers	14,986	412,697
In hands of retail dealers (estimated)	41,063	1,200,000
Total	71,035	1,978,094

RECEIPTS UNDER THE OLEOMARGARINE LAW DURING THE FISCAL YEAR ENDED JUNE 30, 1889.

Districts.	Collections on oleomargarine at 2 cents per pound.	Special taxes of—			Total.
		Manufacturers.	Retail dealers.	Wholesale dealers.	
Alabama			$1,710.00	$880.00	$2,590.00
Arkansas			722.00	3,920.00	4,642.00
First California			24.00		24.00
Colorado	$2,920.32	$600.00	116.00	200.00	3,836.32
Connecticut	130,200.70	2,900.00	16,044.00	4,480.00	153,624.70
Florida			596.00	640.00	1,236.00
Georgia			104.00		104.00
First Illinois	359,175.44	3,500.00	31,674.00	6,740.00	401,089.44
Fifth Illinois			1,176.00	1,040.00	2,216.00
Eighth Illinois			1,320.00		1,320.00
Thirteenth Illinois			598.00	240.00	838.00
Sixth Indiana	80,983.86	600.00	1,362.00	2,520.00	85,465.86
Seventh Indiana			340.00		340.00
Third Iowa			14.00		14.00
Fourth Iowa			244.00		244.00
Kansas	46,555.60	1,200.00	1,200.00		48,955.60
Second Kentucky			44.00		44.00
Fifth Kentucky			1,208.00	1,040.00	2,248.00
Sixth Kentucky			1,972.00	480.00	2,452.00
Seventh Kentucky			292.00		292.00
Louisiana			2,100.00	1,040.00	3,140.00
Maryland	933.80		462.00		1,395.80
Massachusetts	10,334.66	600.00	17,984.00	11,620.00	40,538.66
First Michigan			10,438.00	7,620.00	18,058.00
Fourth Michigan			2,334.00	2,920.00	5,254.00
First Missouri			3,518.00	1,600.00	5,118.00
Sixth Missouri			4,844.00	2,234.00	7,078.00
Montana			552.00	3,800.00	4,352.00
Nebraska			837.51	2,240.00	3,077.51
New Hampshire			1,384.00		1,384.00
First New Jersey			472.00	520.00	992.00
Fifth New Jersey			2,164.00	2,880.00	5,044.00
New Mexico			124.00		124.00
First New York			96.00	200.00	296.00
Third New York			372.00		372.00
Fourth North Carolina			16.00		16.00
Fifth North Carolina			4.00		4.00
First Ohio			5,196.00	2,920.00	8,116.00
Tenth Ohio			500.00	160.00	660.00
Eleventh Ohio	4,085.10	600.00	1,100.00	160.00	5,945.10
Eighteenth Ohio	35,895.54	600.00	4,884.00	1,960.00	43,339.54
Oregon			220.00	2,660.00	2,880.00
First Pennsylvania	6,217.38	1,800.00	840.00	120.00	8,977.38
Twelfth Pennsylvania			50.00		50.00
Twenty-third Pennsylvania			2,902.00	860.00	3,762.00
South Carolina			8.00		8.00
Second Tennessee			148.00		148.00
Fifth Tennessee			1,188.00	1,120.00	2,308.00
Third Texas			568.00	1,400.00	1,968.00
Fourth Texas			1,084.00	1,000.00	2,084.00
Second Virginia			252.00	540.00	792.00
West Virginia			276.00		276.00
First Wisconsin			1,824.00	920.00	2,744.00
Second Wisconsin			1,130.00	1,240.00	2,370.00
Total	677,302.40	12,400.00	130,631.51	73,914.00	894,247.91

STATEMENT BY STATES AND TERRITORIES, SHOWING NUMBER OF PERSONS PAYING SPECIAL TAXES AS MANUFACTURERS OF AND DEALERS IN OLEOMARGARINE.

States and Territories as constituted July 1, 1887, for the collection of internal revenue.	Manufacturers of oleomargarine.	Wholesale dealers in oleomargarine.	Retail dealers in oleomargarine.	Total.
Alabama		2	39	41
Arkansas		5	25	30
California *a*			5	5
Colorado *b*	1	1	3	5
Connecticut *c*	7	14	413	434
Florida		1	35	36
Georgia			7	7
Illinois	7	22	1,092	1,121
Indiana	1	4	85	90
Iowa			8	8
Kansas	2		46	48
Kentucky		5	109	114
Louisiana *d*		3	52	55
Maryland *e*			16	16
Massachusetts	1	29	460	490
Michigan		20	399	423
Minnesota				
Missouri		22	292	314
Montana *f*		6	15	21
Nebraska *g*		5	20	25
New Hampshire *h*			49	49
New Jersey		6	74	80
New Mexico *i*		1	10	11
New York		1	2	3
North Carolina			2	2
Ohio	2	12	381	395
Oregon *k*		6	10	16
Pennsylvania	3	6	141	150
South Carolina			1	1
Tennessee			21	21
Texas		9	66	75
Virginia		2	7	9
West Virginia			9	9
Wisconsin		8	88	96
Total for the special-tax year 1889	24	199	3,982	4,205
Total for the special-tax year 1888	30	166	*2,316	2,512

a Including the State of Nevada.
b Including the Territory of Wyoming.
c Including the State of Rhode Island.
d Including the State of Mississippi.
e Including the State of Delaware, District of Columbia, and counties of Accomack and Northampton in Virginia.
f Including the Territories of Idaho and Utah.
g Including Dakota.
h Including the States of Maine and Vermont.
i Including the Territory of Arizona.
k Including Alaska and the Territory of Washington.
* Found by dividing total receipts by rate of tax for full year.

OF RETAIL DEALERS IN OLEOMARGARINE DOING BUSINESS IN APRIL, 1888, AND APRIL, 1889.

State.	Dist.	1888.	1889.	State.	Dist.	1888.	1889.
.....	.....	18	39	New Jersey	1	7	17
.....	.....	31	23	Do.....	5	36	58
.....	1	0	1	New Mexico.....	.....	22	10
.....	4	0	0	New York.....	1	3	3
.....	.....	17	5	Do.....	2	0	0
it	.....	384	424	Do.....	3	0	2
.....	.....	8	35	Do.....	14	0	0
.....	.....	8	7	Do.....	21	0	0
.....	1	726	974	Do.....	28	8	0
.....	5	46	55	North Carolina.....	4	0	1
.....	8	52	49	Do.....	5	0	1
.....	13	13	13	Ohio.....	1	141	125
.....	6	40	64	Do.....	10	8	21
.....	7	13	15	Do.....	11	55	45
.....	3	0	0	Do.....	18	111	171
.....	4	7	9	Oregon	.....	8	10
.....	.....	66	36	Pennsylvania	1	22	25
.....	2	13	4	Do.....	9	4	0
.....	5	51	38	Do.....	12	0	4
.....	6	66	61	Do.....	23	129	122
.....	7	9	12	South Carolina	.....	0	1
.....	8	2	1	Tennessee.....	2	8	5
.....	.....	23	50	Do.....	5	10	2
.....	.....	23	12	Texas	3	5	28
etts.....	3	405	460	Do.....	4	16	38
.....	1	267	290	Virginia'.....	2	4	5
.....	4	61	97	Do	6	1	0
.....	.....	0	0	West Virginia.....	.....	12	9
.....	1	59	104	Wisconsin.....	1	32	45
.....	6	144	154	Do.....	2	27	40
.....	.....	15	16				
.....	.....	5	23	Total	.....	3,279	3,906
pshire.....	.....	38	47				

NT SHOWING THE LOCATION OF MANUFACTURERS OF AND WHOLESALE LERS IN OLEOMARGARINE DOING BUSINESS IN APRIL 1888 AND 1889.

ection districts.	Location.	1888.		1889.	
		Manufacturers.	Wholesale dealers.	Manufacturers.	Wholesale dealers.
.....v.	Birmingham.....	0	1	0	2
.....	Little Rock.....	0	1	0	1
.....	Fort Smith.....	0	1	0	1
.....	Denver.....	1	2	1	1
.....	Aspen.....	0	1	0	0
it	Providence (R. I.)	5	10	4	10
it	Pawtucket (R.I.).....	1	0	1	0
it	New Haven	1	2	1	1
.....	Jacksonville.....	0	1	0	1
ois.....	Chicago	9	18	7	17
ois.....	Peoria	0	2	0	3
Illinois.....	Cairo.....	0	1	0	1
ana.....	Hammond	1	0	1	0
iana.....	Indianapolis	0	5	0	4
wa.....	Council Bluffs	0	1	0	0
.....	Kansas City.....	2	0	2	0
tucky.....	Louisville	0	3	0	4
tucky.....	Covington	0	1	0	1
.....	New Orleans.....	0	3	0	3
.....	Baltimore.....	0	2	0	0
.....	Washington (D. C.).....	0	0	1	0
sachusetts.....	Cambridge.....	1	0	1	0
sachusetts.....	Boston.....	0	12	0	14
sachusetts.....	Fall River.....	0	3	0	2
sachusetts.....	Lowell.....	0	3	0	3
sachusetts.....	Worcester.....	0	2	0	2
sachusetts.....	Lawrence.....	0	1	0	2
sachusetts.....	Salem.....	0	1	0	2
sachusetts.....	Gloucester.....	0	1	0	0

STATEMENT SHOWING THE LOCATION OF MANUFACTURERS OF AND WHOLESALE DEALERS IN OLEOMARGARINE, ETC.—Continued.

Collection districts.	Location.	1888.		1889.	
		Manufacturers.	Wholesale dealers.	Manufacturers.	Wholesale dealers.
Third Massachusetts	Springfield	0	1	0	2
First Michigan	Detroit	0	4	0	4
First Michigan	Haughton	0	1	0	2
First Michigan	Bay City	0	3	0	3
First Michigan	Saginaw	0	2	0	1
First Michigan	East Saginaw	0	1	0	2
First Michigan	Hancock	0	1	0	1
First Michigan	Escanaba	0	2	0	0
First Michigan	Bessemer	0	2	0	0
First Michigan	Ironwood	0	1	0	1
First Michigan	Grayling	0	1	0	0
Fourth Michigan	Grand Rapids	0	4	0	6
Fourth Michigan	Muskegon	0	1	0	2
First Missouri	St. Louis	0	7	0	3
Sixth Missouri	Kansas City	0	7	0	8
Sixth Missouri	Willow Springs	0	1	0	0
Sixth Missouri	St. Joseph	0	1	0	1
Montana	Butte City	0	2	0	3
Montana	Missoula	0	0	0	1
Montana	Helena	0	1	0	0
Montana	Salt Lake (Utah)	0	1	0	0
Montana	Anaconda	0	0	0	1
Nebraska	Omaha	0	2	0	2
Nebraska	South Omaha	0	0	0	1
New Hampshire	Portland (Me.)	0	1	0	0
First New Jersey	Camden	0	0	0	1
Fifth New Jersey	Jersey City	0	2	0	3
New Mexico	Albuquerque	0	1	0	1
New Mexico	Las Vegas	0	1	0	0
Twenty-eighth New York	Buffalo	1	0	0	0
First Ohio	Cincinnati	0	3	0	4
Tenth Ohio	Toledo	0	0	0	1
Eleventh Ohio	Columbus	1	0	1	1
Eighteenth Ohio	Cleveland	3	2	1	2
Eighteenth Ohio	Youngstown	0	1	0	2
First Pennsylvania	Philadelphia	3	0	2	1
Twenty third Pennsylvania	Pittsburgh	0	3	0	3
Twenty-third Pennsylvania	Johnstown	0	0	0	1
Fifth Tennessee	Memphis	0	2	0	3
Third Texas	Waco	0	0	0	1
Third Texas	El Paso	0	2	0	2
Third Texas	Austin	0	0	0	1
Third Texas	San Antonio	0	0	0	1
Third Texas	Houston	0	0	0	1
Fourth Texas	Dallas	0	1	0	2
Fourth Texas	Fort Worth	0	2	0	2
First Wisconsin	Milwaukee	0	2	0	2
First Wisconsin	Green Bay	0	1	0	0
First Wisconsin	Oshkosh	0	1	0	1
Second Wisconsin	Chippewa Falls	0	1	0	0
Second Wisconsin	Warsaw	0	0	0	1
Second Wisconsin	Eu Claire	0	1	0	1
Second Wisconsin	Ashland	0	2	0	2
Second Wisconsin	Hayward	0	1	0	1
Total		29	154	23	160

REPORT OF THE CHEMIST.

OFFICE OF INTERNAL REVENUE,
Chicago, September 2, 1889.

SIR: I have the honor to submit the following as my report of the chemical examinations made of samples of supposed adulterated butter and oleomargarine sent to this laboratory during the fiscal year ending June 30, 1889:

No.	By whom submitted.	Specific gravity (99° C).	Vol. $\frac{N}{10}$ NaO H (Reichert's process).	Per cent. insoluble fatty acids.	Remarks.
			c. c.		
133	R. Stone, collector first district Illinois.	0.862	0.80	95.40	Oleomargarine, colored with annotto.
134	G. A. Wilson, collector fifth district Illinois.	0.865.5	10.50	90.00	Adulterated butter, with about 25 per cent. foreign fats, not colored.
135	....do....	0.867	13.00	87.70	Butter, not colored.
136	Capt. W. Sommerville, revenue agent.	0.867.8	12.20	88.00	Butter, colored with annotto.
137	....do....	0.866.5	12.80	87.90	Do.
138	....do....	0.867	12.70	88.20	Do.
139	....do....	0.867	12.00	88.30	Do.
140	....do....	0.868	12.60	88.20	Do.
141	....do....	0.867	12.20	78.80	Do.
142	....do....	0.866	12.00	88.10	Do.
143	....do....	0.867	12.50	87.90	Do.
144	....do....	0.866	11.40	88.84	Butter, colored with annotto, old and rancid.
145	G. A. Wilson, collector fifth district Illinois.	0.867	12.80	87.90	Butter, not colored.
146	....do....	0.865	11.20	88.90	Butter, old and rancid, not colored.
147	....do....	0.868	14.50	87.30	Butter, not colored.
148	....do....	0.862.3	10.50	89.93	Adulterated butter, 25 per cent. foreign fats.
149	....do....	0.867	13.20	87.60	Butter, not colored.
150	....do....	0.867	13.70	87.50	Do.
151	....do....	0.866	12.50	87.80	Do.
152	....do....	0.865–6	12.50	87.80	Do.
153	....do....	0.867–8	12.50	87.60	Do.
154	....do....	0.865	13.40	87.90	Butter not colored, rancid.
155	....do....	0.865	12.10	88.20	Do.
156	....do....	0.868	13.50	87.70	Do.
157	E. C. Wall, collector first district, Wisconsin.	0.866	13.00	88.50	Old reworked butter, colored with saffron and turmeric.
158	....do....	0.867	12.30	88.20	Butter not colored.
159	T. Cooper, collector eighth district, Illinois.	0.866	12.50	88.40	Do.

Numerous other examinations were made for the information of collectors and revenue agents, of which no record was kept.

Respectfully submitted.

LOUIS C. STARKEL,
Analytical Chemist Intenal Revenue Bureau.

Hon. JOHN W. MASON,
Commissioner Internal Revenue,
Washington, D. C.

REPORT OF THE MICROSCOPIST.

TREASURY DEPARTMENT,
OFFICE OF INTERNAL REVENUE,
Washington, July 15, 1889.

SIR: I have the honor to submit the following report of the work done in the laboratory since July 1, 1888:

During the past year 95 samples have been received and analyzed. Of this number 30 were substances submitted by collectors of internal revenue for decision under sections 14 and 15 of the act of August 2, 1886, 14 of which proved, on analysis, to be oleomargarine and the remainder butter. From three factories were received 5 samples of the ingredients they employed. Three samples of butter color, 5 samples of different vegetable oils, and 1 of lard oil were also analyzed. Thirty-eight samples of whisky and 13 miscellaneous samples were likewise examined.

No samples were received under the provisions of section 11 of the act of October 12, 1888.

The experiments on methylated alcohol were also carried on and the results obtained were published in last year's report. The preparation of the bibliography and report on adulterated foods occupied my time during the fall to the exclusion of laboratory work.

In January the remainder of the microscopes obtained for collectors' use throughout the country (see page CLXII, Rept. Com. Int. Rev., 1888), were received from the manufacturer, and after being tested were sent, with the necessary instructions, forms, books, etc., to all the collectors of internal revenue and several of the revenue agents.

Although the monthly reports show a steady increase in the quantity of oleomargarine produced and sold, the information derived through the use of these microscopes and otherwise is to the effect that the use of this article in fraud of the internal revenue laws is diminishing. On account of the high tax imposed by the law the small dealers are gradually giving up handling oleomargarine, and the manufacturers and wholesale dealers are thus brought in more direct contact with the consumers. From those States where the local authorities are enforcing the prohibitory features of their law, by fining and imprisoning those persons whose names appear on the collectors' books as having paid the special tax as dealers in oleomargarine, continues to come most of the samples submitted for analysis. Oleomargarine having now been under the law and regulations, before the American public for nearly three years, and sold on its own merits, has assumed its legitimate place as a cheap and wholesome food product.

BUTTER COLOR.

The adulteration of butter with "additional coloring matter" is legalized by the Act defining butter, etc., approved August 2, 1886, although such addition be "intended, fraudulently, to conceal its inferior quality," to use the language of the British "Sale of Food and Drugs Act, 1875," but the addition of certain specified animal oils and fats and of vegetable oils to butter is defined as making such mixtures oleomargarine.

On the wrapper of a sample of "butter color" purchased in this city it is stated that it is "prepared in oil, which is especially refined, so that it can not become rancid." "The color is as harmless as the natural color of butter. The material from which it is made is vegetable and as wholesome as wheat," and "we warrant it to add at least 5 cents per pound to the value of white butter, a return of $1 for every cent it costs." The directions state that one pint will color 2,800 pounds of winter butter, or about 0.036 per cent. of "color" is contained in the butter.

Although the proportion of the annotto used in one pound of butter is extremely small there is no great difficulty in separating it from the butter and recognizing it by certain well-established tests. The problem, however, is much more complicated when the amount of foreign fat thus added to the butter is sought for.

The chemistry of the animal and vegetable fats and oils has not been as careful studied as the inorganic salts and compounds, and the question of distinguishing very small amounts of foreign oils in mixtures is one that involves much time and research before accurate and reliable methods of separation and detection can be established.

The proportion of annotto in the different "butter colors" is less than 10 per cent judging from published analyses, and the remaining 90 per cent. is made up mostly of a vegetable or animal oil. Although the vegetable oil is used as a carrier of the color annotto, there are other menstruums in which it is soluble, as caustic alkalies, ether, alcohol, chloroform, etc., which are neither animal nor vegetable oils or fats. The vegetable or animal oils that are used in "butter colors," when added to the cream coalesce with the minute globules of the butter fat and thus become incorp

rated in the butter when the cream is churned. This combination of vegetable oils with cream is practically illustrated in the manufacture of the cheaper grades of oleomargarine, where cotton-seed, sesame, or peanut oil is added to a mixture of cream, oleo oil, and neutral lard, and churned until a homogeneous mixture is obtained.

Dr. James F. Babcock, inspector of milk and vinegar of the city of Boston, devotes several pages of his last report (thirtieth) to the question of "Colored butter and its imitations."

The objections to the coloring of butter are summarized as follows:

"1. It conceals defects, destroys one of the tests of good butter, and it makes butter from any source or of any season appear as much like Jersey butter or June butter as possible.

"2. Its use adds to the price paid by the consumer from three to five cents per pound, for which he receives no equivalent.

"3. Butter color as usually made is an actual adulterant. Its use violates every State law and the national law on oleomargarine. It consists largely of oil foreign to butter—generally cotton-seed oil, but sometimes linseed oil, lard oil, etc. The amount of foreign fats introduced into butter on the pretense that it is color, though small in individual instances, amounts in the aggregate to an enormous quantity, estimated at 500,000 pounds per annum." (Page 72, 30th Ann. Rept. Inspector of Milk and Vinegar, Boston, 1889.)

"The present annual product of butter in the United States is, according to good authorities, not less than 1,350,000,000 pounds. If only one-half of this butter is colored by the commonly sold butter-color, and if 1 pound only of color is required for 1,200 pounds of butter, as stated by color-makers, the weight of cotton-seed oil, lard oil, or other similar adulterant thus added to butter reaches the enormous figure of 562,500 pounds per annum—more than 280 tons. Still further, assuming that one-half of the total butter production of the country (675,000,000 pounds) is artificially colored, and that, as the color-makers claim, the addition of color increases the market price 5 cents per pound, it follows that the American people pay more than $30,000,000 per annum for the delusion of consuming an article which, by its color, they are led to believe is June butter." (Loc. cit., p. 77.)

Dr. Bennett F. Davenport, in his report on the analysis of foods to the State board of health of Massachusetts, 1888, says, pages 159, 160:

"The very general use of annotto or other coloring matter in butter or cheese is to be condemned as having but one fraudulent purpose, that of making them each to appear to be of a better or finer quality than they really are. In the case of butter it is to make the inferior winter or dry-feed butter to appear to be June or grass butter. In the case of cheese it is to make skim or poor milk quality cheese to appear to be as of whole or rich milk." A further objection to the use of annotto coloring is mentioned in Dr. Davenport's report on milk. (Loc. cit., p. 181.) "It is stated in most of the standard works upon *materia medica* which mention annotto that the coloring matter is obtained from the seeds of the tropical plant *Bixa orellana*, by allowing them to macerate and undergo a fermentation in water. The color thus separated from the seeds settles out from the water on standing and collects upon the bottom of the vessel. The water is drawn off, the color gathered up, dried somewhat, and formed into cakes. That prepared in French Guiana is considered the superior brand of the dye-stuff. There, in the warehouses, it is reported to be the general commercial custom to improve the color of the dye-stuff and prevent its drying by keeping the cake moistened with stale urine. The result of all this is that the commercial dye-stuff is a mass of fermentative products, swarming with germs of putrefaction and smelling rankly of its stale origin. Microscopic examination of the 'benefit' prepared and sold by the best-known maker in the business in this city (Boston) shows that it is not only alive with bacteria, but that it contains very numerous *fungi* spores, single and arranged in rows like those which are to be found in fermented diabetic urine."

"Some of the oleo manufacturers do not make any use of the very objectionable paste form of the dye-stuff, but prepare their coloring directly from the dried seeds themselves, by boiling them in cotton-seed or a similar oil. When the farmers and dairymen no longer use coloring to falsify the appearance of their own product, they can more becomingly demand that the oleomargarine manufacturer be no longer allowed to use it in his product. In the cause of simple justice neither of them should be allowed to use it at all." (*Loc. cit.*, p. 160.)

Does the addition of a "butter color," containing 5 per cent. of annotto and 95 per cent. of other vegetable ingredients, principally a vegetable oil, rape, cotton-seed, when mixed with butter in the proportion of less than 0.04 part in a hundred, constitute the mixture defined as "oleomargarine?" The language of the law does not specify how much or how little vegetable oil, when mixed with butter, shall constitute oleomargarine, and the fact that the largest proportion of the "color" is a vegetable oil, although its presence may not be a matter for quantitative analysis and reaction with our present reagents and methods, appears to place its use with butter under the definition of oleomargarine.

ANALYSES OF SUBSTANCES SUBMITTED FOR EXAMINATION BY COLLECTORS OF INTERNAL REVENUE.

Serial No.	Sample marked—	Place whence received.	Specific gravity at 40° C.	Saponification equivalent.	Vol. $\frac{N}{10}$ NaOH for 2.5 grams.	Microscopic examination.	Proved to be—
142	Butter	Jersey shore, Pa	.91054	245.8	12.758		Butter.
143	....do	Middletown, Conn	.91070	242.7	13.860		Do.
148	Oleomargarine	Philadelphia, Pa	.90200	286.9	0.000	Variegated field; melted fats	Oleomargarine.
149	Butterine	....do	.90372	287.2	0.098	....do	Do.
150	Oleomargarine	....do	.90374	288.2	0.188	....do	Do.
152	....do	....do	.90247	287.4	0.102	....do	Do.
154	....do	....do	.90239	287.2	0.176	....do	Do.
155	Butter	....do	.90868	253.1	12.014	....do	Butter melted.
156	Oleo	....do	.90497	287.7	0.216	....do	Oleomargarine.
157	....do	....do	.90510	287.5	0.175	....do	Do.
158	....do	....do	.90504	287.8	0.250	....do	Do.
160	Made from beef-fat oil	....do	.90254	284.5	0.207	....do	Do.
162	Supposed butterine	Hartford, Conn	.91050	250.0	11.337		Butter.
164	Butter	Philadelphia, Pa	.91064	246.8	13.877		Do.
165	....do	....do	.91104	244.2	13.142		Do.
166	....do	Burlington, Vt	.91012	249.8	13.442		Do.
178	Butter, No. 1	Owego, N. Y	.91166	244.1	14.411		Do.
179	Butter, No. 2	....do	.91130	245.2	15.241		Do.
181	Butter, No. 1	Helena, Mont	.91052	244.5	13.881		Do.
182	Butter, No. 2	....do	.91005	251.7	11.318		Do.
183	Supposed oleomargarine	Pittsburgh, Pa	.90567	284.2	0.882	Variegated field; melted fats	Oleomargarine.
185	Butter	New York, N. Y	.90318	285.7	0.219	....do	Do.
186	Butter, No. 1	New Haven, Conn	.91015	254.5	11.709		Butter.
187	Butter, No. 2	....do	.91180	245.4	13.542		Do.
188	Butter	Newport, R. I	.91134	247.1	14.035		Do.
189	Butter, No. 1	Boston, Mass	.90959	251.1	12.300		Do.
190	Butter, No. 2	....do	.90963	251.2	12.646		Do.
219	Oleomargarine	Baltimore, Md	.90420	281.2	0.686	Variegated field; melted fats	Oleomargarine.
220		Detroit, Mich	.90340	284.2	0.283	....do	Do.
221		....do	.90580	284.3	0.495	....do	Do.

NALYSES OF INGREDIENTS RECEIVED DIRECT FROM THE FACTORIES.

Factory.	Ingredients.	Specific gravity at 40° C.	Saponification equivalent.	Vol. $\frac{N}{10}$ NaOH for 2.5 grams.
P.	Oleo oil	.90210	288.0	0.000
Q.	....do	.90198	288.2	0.108
R.	....do	.90251	286.1	0.213
P.	Neutral lard	.90454	287.8	0.000
P.	Cotton-seed oil	.91113	288.0	0.000

ANALYSES OF VEGETABLE OILS.

Variety.	Specific gravity at 40° C.	Saponification equivalent.	Vol. $\frac{N}{10}$ NaOH for 2.5 grams.
Linseed, raw	.92811	294.5	0.00
Linseed, boiled	.92291	309.8	0.00
Olive oil, Tuscan	.90591	294.5	0.00
Rape-seed	.....	304.0	0.00
Peanut	.....	287.8	0.00
Lard-oil	.88771	365.4	0.00

NEED OF A NEW LABORATORY.

sh to repeat my former recommendation of the need of a new and enlarged laby, as the present one is so crowded with the necessary apparatus for proper cal and miscroscopical examinations of samples as to leave very little floor room. parison of the laboratories of the Inland Revenue Department of Great Britain, ndon, and that of the Municipal Laboratory of Paris, with the large force of sts therein employed, may not be uninteresting in this connection.

chemical division of the Inland Revenue Department, at Somerset House, Lons under the control of Dr. Bell, F. R. S., and has a force of forty chemists cony employed, in addition to a class of some eight students, who attend the lecdelivered at South Kensington, and are specially instructed in the routine work chemical analyses carried on in the Somerset House laboratory. There is being trained an expert chemical force thoroughly fitted for all the various s of work demanded by the Department.

chemical and physical examination of samples, carried on in this laboratory, e divided into nine different classes, viz:

mination of grain, etc.
mination of worts.
mination of fermented liquors.
mination of spirits.
mination of methyl and methylated alcohol.
mination of tobacco.
mination of railway supplies for the India Department.
mination of hydrometers, and saccharometers.
mination of adulterated foods and drugs on appeal from public analysts' cers.

examination of the railway supplies for the India Department keeps a large f the chemical force constantly employed in testing the supplies to determine er they come up to the standard called for by the contracts or not, and whether e of the same strength and quality of the sample originally submitted with l. These supplies embrace materials of all kinds, foods, paints, oils, brasses, teel, etc. (This is a feature that might, with profit, be followed by this Govnt.)

ufactured tobacco, when exported, can have the tax refunded, and for this e the addition of water during manufacture has to be determined and taken nsideration when allowing the withdrawal free of tax.

use of methylated alcohol is so extensive in England that several of the cheme exclusively employed on the analysis of the methyl used and the methylated l produced by the licensed manufacturers. The Inland Revenue officers, at the

time of my recent visit, were of the opinion that their law, rules, and regulations are so worded that there is little opportunity for fraud on the revenue, and with their seventy-five collection districts there is abundant supervision exercised. Nevertheless, the use of an immiscible naphtha is being urged on the authorities so as to reduce the opportunity of fraud to a minimum.

The different classes of work are carried out in a series of separate laboratories each fitted up for the special work in hand, and the chemists are assigned to them by the chief, Dr. Bell.

As "margarine" is not an object of special tax no supervision is exercised over its manufacture and sale by the Inland Revenue Department. The provisions of the act are carried out by the local city and county authorities.

The Municipal Laboratory of Paris, as its name implies, is taken up wholly with the examination of food and beverages sold in Paris, and such other articles as may be submitted by the police and municipal authorities. A chief, assistant chief, and twenty-five other chemists are employed, besides a force of inspectors. Qualitative analysis is made for the general public of samples submitted, in conformity to certain regulations, free of charge. A fee of from 5 to 20 francs is, however, demanded for quantitative work, depending upon the nature of the analysis. Analyses are also made for the prison, hospital, college, army, and suburban authorities. The great majority of the samples analyzed consists of waters, wines, spirits, liquors, cordials, beers, ciders, milk, butter, cheese, lard, oil, flour, cereals, coffee, chocolate, etc., and special investigations, such as the presence of salicylic acid in foods, the presence of lead in tins, siphons, and soldered vessels, the coloring of toys, candies, and sirups, the air of sewers, etc., are from time to time carried on.

Respectfully submitted.

EDGAR RICHARDS,
Microscopist.

Hon. JOHN W. MASON,
Commissioner of Internal Revenue.

REPORTS OF EXAMINATIONS MADE BY COLLECTORS AND DEPUTY COLLECTORS WITH INTERNAL REVENUE MICROSCOPES OF ARTICLES RESEMBLING BUTTER.

State.	District.	Butter.	Oleomargarine.	Total.
California	.....	12	1	13
Connecticut	.....	167	15	182
Illinois	1	135	.....	135
Do	5	179	12	191
Do	8	44	5	49
Kentucky	6	62	.....	62
Do	7	33	.....	33
Maryland	.....	26	5	31
Michigan	4	3	.....	3
Missouri	1	172	31	203
New Mexico	.....	93	.....	93
New York	3	71	.....	71
South Carolina	.....	83	.....	83
Virginia	2	103	.....	103
Total	.....	1,182	69	1,251

OLEO OIL EXPORTED.

It appears from the report of the Chief of the Bureau of Statistics of this Department that the quantity of oleo oil exported during the year was 28,102,534 pounds, 2,044,061 pounds less than the quantity exported during the previous year.

ADULTERATION OF FOOD AND DRUGS.

THE ACT TO PREVENT THE MANUFACTURE OR SALE OF ADULTERATED FOOD OR DRUGS IN THE DISTRICT OF COLUMBIA.

Owing probably to the fact that the appropriation for carrying into effect the provisions of the act of October 12, 1888, entitled "An act to prevent the manufacture or sale of adulterated food or drugs in the District of Columbia," did not become available until after the close of the fiscal year covered by this report, no samples were submitted to me for analysis as provided by that act. The report of the microscopist in charge of the laboratory connected with this office is herewith submitted. Attention is also called to the annexed copies of laws of foreign countries on the subject of food adulteration.

This office is of the opinion that the failure to forward samples of suspected food for analysis may be ascribed to the apathy of the general public and that of the health department of the District of Columbia. The failure to forward such samples since July 1, 1889, when the appropriation act took effect, seems to favor this view of the case.

The copies of European laws furnished herewith and with last year's report are deemed valuable in that they furnish hints for the preparation of regulations under the existing law in which this office is interested. They also furnish models for the amendments which are needed and generally are useful as guides in future state and federal legislation on this subject. It is evident that unity of action between State and Federal authorities in the matter must be secured before the best results can be accomplished. On the one hand opponents of the passage of federal laws on food adulteration have urged that such laws interfere with the exercise of the police powers of the States, and that under the Federal Constitution such powers were not surrendered to the United States; on the other hand, certain laws passed by States to prevent the sale of impure food therein have been found to be in conflict with the power conferred by the Constitution on Congress to regulate foreign commerce and commerce between the States; also in violation of the provision forbidding a State to make or enforce any law which shall abridge the privileges or immunities of citizens of the United States.

The most recent judicial decision in this matter which has come to my notice is that of Judge Blodgett, published in the Internal Revenue Record of October 14, 1889. As the opinion rendered in this case sets forth very clearly the views of Judge Blodgett and embodies the opinions of several judges of the Supreme Court, including that of Chief Justice Marshall, as to the rights and powers of the States and of the United States in this class of legislation, I have deemed it advisable to insert it in this report below.

United States circuit court, eastern district of Illinois.

GUSTAVUS F. SWIFT *v.* JOHN B. SUTPHIN.

THE RIGHT TO IMPORT AND SELL—REGULATION OF COMMERCE—CONSTITUTIONAL PROVISION.

1. Held, that the statute of Minnesota providing for the inspection before slaughter, of cattle, etc., is void under the provisions of Art. I, Sec. 8, of the Constitution of the United States, which clothes Congress with the power to regulate commerce with foreign nations and among the several States.—Ed. Chicago Legal News.

[Opinion filed September 13, 1889.]

BLODGETT, J.:

This is an action of assumpsit upon a contract entered into between the parties on the 10th day of May last, whereby it was provided that the parties should go into partnership, in the city of Duluth, Minn., for the purpose of selling there on commission fresh dressed meats, slaughtered and prepared for market by Swift & Co., at the Union Stock Yards in Chicago, Ill.

The contract further provided that the proposed partnership should continue for five years from June 1, 1889; that the capital of the firm should be $15,000, one-half to be contributed by each party; and further provided, that if either party should fail or refuse to enter into such partnership, or perform its conditions as stipulated, the party so failing or refusing should forfeit and pay to the other party the sum of $7,500 liquidated damages.

The declaration charges that the plaintiff has always been ready and willing to perform his part of the contract, and that the defendant refuses to enter upon said partnership, or in any manner comply with said agreement, wherefore the plaintiff claims damages as stipulated in the contract.

The defendant, by way of defense, interposed two pleas, both of which set up, in somewhat different phraseology, an act of the General Assembly of the State of Minnesota, approved April 16, 1889, prohibiting the sale of such meats as the partnership was formed to sell, unless the animals from which such meat should be taken had been within twenty-four hours before slaughter inspected and found healthy and in suitable condition to be slaughtered for human food by inspectors appointed under the provisions of said statute.

Plaintiff demurs to both these pleas, upon the ground that the statute invoked as a defense is in contravention of the Constitution of the United States, and therefore void.

The statute in question purports by its title to be "An act for the protection of the public health by providing for inspection before slaughter of cattle, sheep, and swine designed for slaughter for human food."

The demurrer to these pleas raises the question as to whether the statute in question is or is not void under the provisions of Art. I, Sec. 8, of the Constitution of the United States, which clothes Congress with power to regulate commerce with foreign nations and among the several States, and also under the provisions of Sec. 1 of Art. XIV, on the ground that it abridges the privileges and immunities of citizens of other States.

Dressed meats have been from time immemorial articles of local commerce. It may be said that every civilized community has its butchers engaged in the slaughtering of animals for human food, and the courts will take judicial notice that within the last few years, by means of new appliances for the preservation of such meats and the facilities for rapid transportation by means of railroads, a large and, it may be said, a new business has grown up in the slaughtering and transportation of the dressed meats for human food to distant points from the place of slaughter, so that this business has now become an important item of interstate commerce.

The press teems with accounts and statements of the magnitude of the business. The traveler journeying over our railroads meets at almost every point cars constructed and adapted expressly for such business. The records of the Patent Office show the invention and patenting of many cars and warehouses specifically designed for conducting such business, and at the late session of Congress a committee was appointed by the Senate to investigate during the present recess and report at the next session upon some of the phases and methods of said business, so that there can be no doubt, from common knowledge, that to-day dressed meats for human food are articles of interstate commerce.

The act in question purports by its title to be an act for the protection of the public health by providing for the inspection before slaughter of animals designed for slaughter for human food, and its validity is asserted on the ground that it is a police regulation coming within the sphere of the State government, but even a cursory

ts provisions shows that its practical effect and operation is to exclude all
ats from animals slaughtered outside of the State of Minnesota. The ani-
not only be inspected within twenty-four hours before they are slaughtered,
nust be inspected within the State—that is, by State officers, who would
ower to act except within the State. It will, therefore, be assumed that
e in effect excludes and prohibits the sale in the State of Minnesota of
ats intended for human food from animals slaughtered outside that State.
ıe State legislatures are clothed with large discretion in the exercise of
ə powers for the protection of the health, property, and persons of their
ere can be no doubt that this power must be exercised so as not to interfere
rs over which the Federal Government has exclusive jurisdiction, and no
v speciously a State statute may be worded, if in its operation it impinges
ederal Government, it is so far void.
r *v.* Kansas, 123 U. S., 623, it was said by the Supreme Court of the United
t does not at all follow that every statute enacted ostensibly for the pro-
hese ends is to be accepted as the legitimate exertion of the police powers
e. There are, of necessity, limits beyond which legislation can not right-
* * The courts are not bound by mere forms nor are they to be mis-
ə pretenses. They are at liberty, indeed, are under a solemn duty, to look
tance of things, whenever they enter upon the inquiry whether the legis-
transcended the limits of its authority. If, therefore, a statute purporting
en enacted to protect the public health, the public morals, or the public
no real or substantial relation to those objects, or is a palpable invasion
ɔcured by the fundamental law, it is the duty of the courts to so adjudge,
y give effect to the Constitution. * * * Undoubtedly the State, when
ɔy legislation for the protection of the public health, the public morals, or
safety, is subject to the paramount authority of the Constitution of the
tes, and may not violate rights secured or guaranteed by that instrument,
with the execution of the powers confided to the General Government."
ı *v.* Maryland, 12 Wheat., 439, Chief-Justice Marshall, speaking for the
: "There is no difference in effect between a power to prohibit the sale of
ınd a power to prohibit its introduction into the country. The one would
ary consequence of the other. * * * If this power reaches the interior
and may be there exercised, it must be capable of authorizing the sale of
les which it introduces. Commerce is intercourse; one of its most ordi-
lients is traffic. It is inconceivable that the power to authorize this traffic,
ı in the most comprehensive terms with the intent that its efficacy should
e, should cease at the point when its continuance is indispensable to its

ıt purpose should the power to allow importation be given unaccompanied
ɔwer to authorize a sale of the thing imported? Sale is the object of im-
ınd is an essential ingredient of that intercourse of which importation con-
art. It is as essential an ingredient, as indispensable to the existence of
hing, then, as importation itself.
t be considered as a component part of the power to regulate commerce.
as a right not only to authorize importation, but to authorize the importer

license cases, 5 Howard, 588, it was said by Mr. Justice McLean: "The
vernment is supreme within the scope of its delegated powers, and the State
ts are equally supreme in the exercise of those powers not delegated by
inhibited to them. From this it is clear that while these supreme func-
xercised by the Federal and State governments, within their respective
, they can never come in conflict. And when a conflict occurs the inquiry
sarily be, which is the paramount law? And that must depend upon the
of the power by which it was enacted. The Federal Government is su-
ıe exercise of powers delegated to it, but beyond this, its acts are unconsti-
d void. So the acts of the States are void when they do that which is in-
them, or exercise a power which they have exclusively delegated to the
vernment."
ailroad Company *v.* Husen, 95 U. S., 465, Mr. Justice Strong, speaking for the
: "We admit that the deposit in Congress of the power to regulate foreign
ınd among the States was not a surrender of that which may properly be
ɔd police power. What that power is it is difficult to define with sharp pre-
is generally said to extend to making regulations promotive of domestic
als, health, and safety. * * * But whatever may be the nature and
ıe police power of a State it can not be exercised over a subject confided
to Congress by the Federal Constitution. It can not invade the domain
onal Government. * * * Neither the unlimited powers of a State to
y of its large police powers, can be exercised to such an extent as to work
assumption of the powers properly conferred upon Congress by the Con-

stitution. * * * While we unhesitatingly admit that a State may pass sanitary laws and laws for the protection of life, liberty, health, or property within its borders; while it may prevent persons and animals suffering under contagious or infectious diseases, etc., or convicts, etc., from entering the State; while for the purposes of self-protection it may establish quarantine and reasonable inspection laws, it may not interfere with transportation into or through the State beyond what is absolutely necessary for its self-protection. It may not, under the cover of exerting its police powers, substantially prohibit or burden either foreign or interstate commerce." So, in Bowman *v.* Railway Company, 125, U. S., 465, a case which involved the constitutionality of the statute of Iowa, prohibiting common carriers from bringing intoxicating liquors into that State, Mr. Justice Matthews, in the opinion of the court, replying to the argument that the statute then in question was a proper exercise of the police power, says: "If, from its nature, it does not belong to commerce, or if its condition, from putrescence or other cause, is such when it is about to enter the State that it no longer belongs to commerce, or, in other words, is not a commercial article, then the State power may exclude its introduction. And as an incident to this power, a State may use means to ascertain the fact. And here is the limit between the sovereign power of the State and the Federal power. That is to say, that which does not belong to commerce is within the jurisdiction of the police power of the State, and that which does belong to commerce is within the jurisdiction of the United States. * * * The exclusive State power is made to rest, not on the fact of the state or condition of the article, nor that it is property usually passing by sale from hand to hand, but on the declaration found in the State laws and asserted as the State policy, that it shall be excluded from commerce. And by this means the sovereign jurisdiction in the State is attempted to be created in a case where it did not previously exist. * * * If this be the true construction of the constitutional provision, then the paramount power of Congress to regulate commerce is subject to material limitation, for it takes from Congress and leaves with the States the power to determine the commodities or articles of property which are the subjects of lawful commerce. * * * Congress may regulate, but the States determine what shall or shall not be regulated. Upon this theory the power to regulate commerce, instead of being paramount over the subject, would become subordinate to the State police power, for it is obvious that the power to determine the articles which may be the subjects of commerce, and thus to circumscribe its scope and operation, is in effect the controlling one. The police power would not only be a formidable rival, but in a struggle must necessarily triumph over the commercial power, as the power to regulate is dependent upon the power to fix and determine upon the subjects to be regulated. The same process of legislation and reasoning adopted by the State and its courts could bring within the police power any article of consumption that a State might wish to exclude, whether it belonged to that which was drank or to food and clothing, and with nearly equal claims to propriety as malt liquors, and the produce of fruits other than grapes stands on no higher grounds than the light wines of this and other countries, excluded, in effect, by the law as it now stands. And it would be only another step to regulate real or supposed extravagance in food and clothing. * * * It can not, without the consent of Congress, express or implied, regulate commerce between its people and those of the other States of the Union in order to effect its end, however desirable such a regulation might be."

It is urged in behalf of the defendant that while the power to regulate commerce is so far vested in Congress that the State law can not prohibit commercial commodities from being brought into a State, this does not prevent the State Legislature from prohibiting the sale after it is brought within the jurisdiction of the State. This position seems to me to be abundantly answered in the quotation already made from the opinion of the Supreme Court in Brown *v.* Maryland, that the power of Congress to regulate the introduction of articles of commerce necessarily implies the right to authorize the sale of commercial articles so introduced, and in the opinion in the Bowman case, heretofore referred to, it is said by Mr. Justice Matthews: "It is easier to think that the right of importation from abroad and of transportation from one State to another includes, by necessary implication, the right of the importer to sell in unbroken packages at the place where the transit terminates, for the purpose and motive of that branch of commerce which consists in transportation is that other and consequent act of commerce which consists in the sale and exchange of the commodities transported."

And Mr. Justice Field, in his concurring opinion in the same case, says: "So, in the present case, it is perhaps impossible to state any rule which would determine in all cases where the right to sell an imported article under the commercial power of the Federal Government ends and the power of the State to restrict further sale has commenced. Perhaps no safer rule can be adopted than the one laid down in Brown *v.* Maryland, that the commercial power continues until the articles imported have become mingled with and incorporated into the general property of the State and not afterward. And yet it is evident that the value of the importation will be mate-

tially affected if the article imported ceases to be under the protection of the commercial power upon its sale by the importer. There will be little inducement for one to purchase from the importer if immediately afterward he can himself be restrained from selling the article imported, and yet the power of the State must attach when the imported article has become mingled with the general property within its limits, or its entire independence in the regulation of its internal affairs must be abandoned. The difficulty and embarrassment which may follow must be met as each case arises."

The statute now in question meets at the border of the State an article of commerce intended for human food, and arbitrarily declares it unfit for such purpose and prohibits its sale. This seems to me a palpable invasion by the State of the domain of Congress. That the State authorities may provide for the inspection of such articles and prohibit their sale if found in fact unfit for use as food must be conceded, but even the power of inspection is undoubtedly so limited by the first clause of Article XIV, as that the citizen of another State owning such article is to be treated in the same manner as a citizen of the State into which the article is imported. Upon this point the following extract from the opinion in the Bowman case is pertinent:

"If the State of Iowa may prohibit the importation of intoxicating liquors from all other States, it may also include tobacco or any other article, the use or abuse of which it may deem deleterious. It may not choose even to be governed by considerations growing out of the health, comfort, or peace of the community.

"Its policy may be directed to other ends. It may choose to establish, directed to the promotion and benefit of its own agriculture, manufactures, or arts of any description, and prevent the introduction and sale within its limits of any or of all articles that it may select as coming into competition with those which it seeks to protect."

And the same principle is affirmed in the license cases (5 How., 504, Ward *v.* Maryland, 12 Wall., 418) and many other cases that might be cited.

It is further urged on the part of the defendant, in support of this legislation, that the inspection of the living animal from which the meat to be sold for human food is to be taken is necessary before slaughter, in order to accurately determine whether the animal is fit to be slaughtered for such purposes.

This reason is more specious than sound, and might be applied with the same force to any manufactured or partly manufactured article which is the subject of commerce. The wholesomeness of flour, cured meats, corn, meal, tobacco, canned fruits, fish, etc., could perhaps be more accurately determined if the raw material from which such goods were produced could be inspected before manufacture, but the admission of the doctrine that a State can interdict the introduction and sale of an article of commerce, unless an inspection is made by the proper officer of said State of the raw material from which such goods are produced, would put all commerce in the State within the control of its legislature. As is said by Mr. Justice Field in his concurring opinion in the Bowman case, "What is an article of commerce is determined by the usages of the commercial world, and does not depend upon the declarations of any State."

The authorities, then, seem to me to fully establish the proposition that no article of commerce can be excluded from introduction into and sale in a State by State inspection laws or prohibition laws, and the common commercial usage and course of trade, and not the legislature of the State, determine what are articles of commerce. Tested by these rules, I am of opinion that the statute in question is unconstitutional and void, and furnishes no answer to the plaintiff's case.

Since preparing the notes for this decision I have been furnished with a newspaper clipping of the opinion by Judges Ensign and Stearns of the eleventh judicial district of the State of Minnesota, in the case of Christian, which arose upon a writ of habeas corpus, Christian having been tried for a violation of this act and sentenced to imprisonment, in which I am pleased to see that these learned judges have in an able and exhaustive opinion arrived at the same conclusion as myself in regard to the validity of this statute. The demurrer to the pleas is sustained.

REPORT OF THE MICROSCOPIST.

ADULTERATION OF FOODS.

SIR: Since the approval of the Act "to prevent the manufacture or sale of adulterated food or drugs in the District of Columbia," October 12, 1888, to date* there has not been a single sample submitted for analysis, as provided for in section 11 of the Act. This result may be ascribed to the apathy of the general public, and that of the health department of the District. This office has brought the subject to the attention of the Commissioners of the District, the health department, and the local press by letters and by furnishing them with copies of the law, regulations, and blank forms of application, but has not succeeded in enlisting their active co-operation.

* November 1.

The law does not provide that the Commissioner of Internal Revenue shall enforce its provisions in procuring samples of food or drugs, that matter being delegated to "any purchaser," "any health officer, inspector of nuisances, or any food inspector," only requiring that the analysis shall be under his control "under such rules and regulations as may be prescribed by the Secretary of the Treasury." The officers specified in the Act are not under the control of the Commissioner of Internal Revenue nor of the Secretary of the Treasury.

The law is modeled on the "Sale of Food and Drugs Act, 1875," of Great Britain, sections 2, 3, 4, 5, 6, 7, 8, 9, 12, 17, 24, 25, and 27 (see Annual Report Commissioner Internal Revenue, 1888, p. CXCV), with certain necessary provisions of the English act omitted, especially those in regard to its mode of enforcement, the collection, identification, and payment for analysis of samples, etc.

In Great Britain an amendment act had to be passed in 1879 defining the meaning and effect of section 6 (sections 3, 4, and 5 had early been found to be of no practical value), as conflicting decisions had been given in England and Scotland. In fact, in the latter country the act had been inoperative since the decision by a majority of the judges of the High Court of Justiciary in Scotland that an official purchaser under section 13 of the act, buying samples for analysis and not for consumption, or at his own expense, could not be prejudiced by the purchase, and consequently that no offense would be committed under section 6. The court also held that the words "nature, substance, and quality," in section 6, could not be disjointed, and the article sold must be different in all three respects from the article demanded, and that as the statute was intended to strike only at foreign admixtures, the very nature of the substance must be altered, or the offense contemplated could not be committed. (Davidson *v.* McLeod, Cowper's Reports, Vol. III, p. 538.)

NEED OF A NATIONAL LAW.

That a national law to regulate the sale of adulterated articles of food is needed in this country, where the manufacture and sale of adulterated foods of all kinds is carried on more openly and on a larger scale than in foreign countries, goes without question, and it is a great pity that the law intended for this capital city should prove a dead letter from the outset, because of the lack of certain administrative features and clear definitions. It, therefore, seems desirable to have the law amended in these regards. With the experience gained in enforcing a proper food-adulteration law in the District of Columbia, the extension of its provisions to all territory over which the United States has exclusive jurisdiction would readily follow, and finally it could be so enlarged as to embrace all adulterated articles of food intended for consumption sold in any State or Territory other than where produced. With the co-operation of the different State and local authorities a very thorough supervision over such foods could be maintained. A national law would not apply to adulterated articles of food manufactured and sold in the State or Territory where produced, unless it should take the form of a revenue measure, imposing a tax on the manufacturers of and dealers in such commodities.

The different State laws on food adulteration are, with one or two exceptions, entirely inoperative. Being drawn up with the idea that an adulterated article of food is necessarily injurious to health, these laws fail to reach the great majority of cases where cheap and harmless substitutes are used.

Such laws would be more effective if in them the word "food" is defined as including every eatable, beverage, commodity, material, or ingredient for food whatsoever, intended for consumption; and an article of food shall be deemed to be "adulterated"—

First. If any substance has been added thereto which does not exist in the normal article or is only found there in an appreciably lower proportion;

Second. If any substance has been subtracted therefrom which is normally present in the article and which is not found in the abnormal article or only there found in an appreciably lower proportion;

Third. If any substance has been substituted wholly or in part for the article;

Fourth. If it be an imitation or sold under the name of another article; and

Fifth. If it consists wholly or in part, whether manufactured or not, of an animal or vegetable substance that is diseased, decomposed, putrid, or rotten: *Provided*, That the addition to foods of any substance that increases their value; or the subtraction from foods of any inferior constituent, without deteriorating the resulting article; or the substitution of a superior for an inferior article, where there is no intention to defraud or to deceive, shall not be considered adulterations within the meaning of the act.

When substances known to be injurious to health (as those specified in the fifth definition above, and the mineral and organic salts and compounds enumerated in (6) of the Regulations concerning analyses of foods and drugs, Series 7, No. 15, 1888, p. 16) are present in food, the manufacturer or dealer in whose possession or ownership such adulterated foods are found shall be liable to the confiscation and destruc-

tion by the proper officers of such adulterated articles without compensation for the goods, and want of knowledge in the possession of the manufacturer or dealer that the same was adulterated shall be no excuse. He shall also be liable to more or less heavy penalties, at the discretion of the court. If, on account of dealing in or consumption of articles spoiled in manufacture or transportation, or in those injurious to health, a death or even a severe sickness is caused by the same, the penalty shall be increased to imprisonment at hard labor for a term of years.

The adulterations of food, as specified in the first four definitions, being aimed at the pocket and not at the health of the consumer, the taxes, fines, or penalties, as the case may be, provided for their violation should be such as to make dealing in them, unless clearly and distinctly labeled and branded, unprofitable. By thus compelling all manufacturers and dealers to wrap, label, and brand in a conspicuous manner all articles of food intended for consumption adulterated within the meaning of the first four definitions, the purchaser could readily recognize that such articles were of an inferior quality, and therefore should not be as expensive as the pure article. For instance, a mixture of beef stearine and cotton-seed oil has been placed on the market to compete with lard, having been sold under the name of "refined lard." These ingredients are as wholesome as the best kettle-rendered leaf lard, but being less costly, the mixture should be sold at a cheaper rate. As was said last year, "Food adulteration is carried on by manufacturers in the interest of pecuniary profit and gain, and they take pains to keep themselves well posted on the subject of cheap and harmless substitutes." "The public is *cheated* but not *poisoned*." (Annual Report Commissioner Internal Revenue, 1888, p. CLXXXVI.)

However perfect the definitions or severe the penalties for violations of the law may be, still, unless the means for enforcing its provisions are furnished, no good would come of it. The establishing and maintaining the force necessary for the due supervision and control, under a national law, of such adulterated foods should be suitably provided for, and the rules and regulations for their guidance should be vested in some responsible bureau officer, with the approval of the Secretary of the Department.

This force should be divided into two classes: (1) The inspectors, who would be assigned to certain districts, and should visit all manufactories of food products, including slaughter-houses and dairies and the places of all dealers where articles of food intended for consumption are sold, displayed, or stored, procuring, by purchase or otherwise, samples for inspection or analysis. They should have the necessary police authority to detain, seize, or destroy adulterated articles of food wherever found, as now vested in most municipal sanitary police officers. (2) The analysts, under the control of a chief, would be required to make the necessary chemical and physical examinations of the samples of food collected by the inspectors, or submitted, under suitable regulations, by other parties. The duly-verified certificate of an analyst, stating that the examination of the sample submitted shows it to be adulterated within the meaning of the act, should be received as evidence of the fact in any proceedings taken against any person for violation of the law. The defendant, however, should have the right to require the attendance of the analyst for the purpose of cross-examination.

Standards of strength, quality, or purity of different foods should be fixed from time to time and prescribed by the Secretary of the Department for the guidance of the analysts.

Other suggestions made in last year's report on the adulteration of foods and drugs might likewise be embodied in such a law.

LIST OF BRANDS OF ADULTERATED FOOD PRODUCTS.

The following lists of brands of food products that have been found on analysis to be adulterated, have been compiled from the reports of the Massachusetts State Board of Health, those of the State Dairy Commissioner of New Jersey, and those of the Department of Inland Revenue of Canada, published within the last five years.

BAKING-POWDERS.

These may be said to be the makeshift of the lazy and ignorant bread-maker. They all administer a medicinal dose, having more or less effect on the human economy, depending on the nature of the ingredients used, from Rochelle salts, where cream of tartar and alkaline bicarbonates are employed, to a strong astringent, where alum is used. They are all sold at an immense profit, even if chemically pure salts were employed, which is seldom the case, the ordinary commercial product answering sufficiently well. No pound sample should cost more than 25 cents.

ALUM BAKING-POWDERS.

A. & P. (Atlantic and Pacific.)
Albany Favorite.
American Gilt Edge.
Aunt Sally.
Brooks & McGeorge.
Brunswick Yeast Powder.
Burnett's Perfect.
Can't be Beat.
Capitol.
Centennial.
Challenge.
Choice Crystal.
Cook's Acme.
Cook's Best.
Cook's Best Friend.
Cook's Choice.
Cook's Favorite.
Cook's Finest.
Coral.
Crystal.
Daisy.
Davis.
Davis O. K.
Dixon.
Dooley's.
Dry Yeast.
Eclipse.
Enterprise.
Eureka.
Featherweight.
Fleur de Lis.
Forest City.
Four Aces.
Gem.
George Washington.
Globe.
Golden Sheaf.
Grape.
Henkel.
Higgins.
Holyoke.
Hygienic.
International.
James' (London).
Kenton.
Lincoln.
London.
Mason's.
McDowell's G. & J.
Miles' Prize.
Ne Plus Ultra.
New Era.
Ocean Foam.
Ocean Wave.
Old Colony.
On Top.
One Spoon.
Orange.
Our Own.
Patapsco.
Perfection.
Pride of Ottawa.
Pride of Toronto.
Puritan.
Purity.
Silver Cream.
Silver King.
Silver Queen.
Silver Star.
Silver Thimble.
Snowdrift.
Springfield.
Somerville.
Sovereign.
Standard.
Star.
State.
Superior German.
Vienna.
Welcome.
White Star.
Windsor.

"PACKAGE" COFFEE.

(Chief adulterants found: chicory, peas, beans, rye, corn, wheat, coloring matter).

American Company's.
Bacon, Stickney & Co.
Blue Seal, Wm. Scull & Co.
Brazil Blended.
Brooks, Brower & Ware.
Chase's.
Eight O'clock Coffee.
Eureka.
Excelsior.
French Breakfast.
G. A. & P. T. Co.
"Java Coffee."
Medicated.
National, Davis, Silvers & Co.
Newhall's.
None Such.
Old Spanish Hacienda.
Plantation.
Spurr's Breakfast.
Sunrise, Weikel Spice Company.
U. P. T. Co.
Vienna Breakfast.

CREAM OF TARTAR.

(Chief adulterants: sulphate of lime, acid phosphate of lime, more than 6 per cent. of tartrate of lime, alum, corn-starch, and flour).

Aliyn, Blanchard & Co., Hartford, Conn.
Bennett & Sloan, New York.
Crescent Mills, Connecticut.
Hope Mills, Providence, R. I.
Madeira X 1848, New York.
Malaga, New York.
Quinnipiac Mills, Connecticut.
Springfield Coffee and Spice Company.
Tiger Mills, New York.
XXX First Quality.

CANNED VEGETABLES.

(The addition of sulphate of copper in small quantities to give a green color seems to be a common practice with these firms.)

Barton Fils, Paris, peas.
Alex. Bernard, Bordeaux, peas.
A. Billet, beans.
Charpentier, Usine de Montrouge, peas.
E. M. Dadelzen, Bordeaux, peas.
Dandicolle & Gaudin, Bordeaux, peas, string beans, sprouts.
Duprat, Clement & Maurel, peas.
Alexandre Eyquem, Bordeaux, peas.
J. Fiton Aine & Cie, Bordeaux, peas.
Fontaine Frères, peas.
Guillaumez, Nancy, peas.
Lanan Francois & Cie, Bordeaux, peas.
Marcelino, Paris, peas.
Alphonse Pinard, Bordeaux, peas.
Eugene du Raix, Bordeaux, peas.
Rödel & Fils Frères, peas.
F. Rondenet, Nantes, peas.
Soule & Price, Bordeaux, peas.
G. Talbot, Bordeaux, beans.
Victor Tertrais, Nantes, peas.
Gabriel Triat & Cie, Bordeaux, peas.

LARD.

(Chief adulterants found: water, beef-stearine, cotton-seed oil.)

Armour & Co., Chicago.
Armour Packing Company, Kansas City.
J. H. Bruggeman, Cincinnati.
Cassard & Son.
Chase & Decker, New York.
Cobb Bros.
T. O. Daniels, Chicago.
N. K. Fairbanks & Co., Chicago.
F. W. Garde & Co., Chicago.
Halstead & Co.
Hall & Cameron.
Hammond & Co., Detroit.
G. L. Lyons.
Rohe Bros.
Wilton, Chicago.
Chas. F. Tietjen, New York.

OLIVE OIL.

(Chief adulterants found: cotton-seed oil, other vegetable oils.)

Huile d'Olive d'Aix, Berger Frères, Bordeaux.
Rudolph Chevalier.
R. L. Dacosini, Nantes, Huile d'Olive Superfine Clarifiée.
Huile d'Olive Superfine Clarifiée, R. L. Dacosini, Nice.
Dacosini, Bordeaux.
Ducro & Cie, Aix.
B. Dufour & Cie, Huile d'Olive Superfine Clarifiée.
E. Ferrari.
Guillaume, Bordeaux.
Lazell, Dalley & Co.
Huile d'Olive Vierge E. Loubon, Nice.
Mohnoel.
Orient Frères, Bordeaux, Huile d'Olive Vierge.
Pure olive oil, prepared by J. L. Pynchon.
Huile d'Olive Vierge, A. Seguin, Nice.
L. Verona.
Huile d'Olive Vierge d'Aix, Bordeaux.
Superfine Huile d'Olive, Nice.
Huile de Salade, Providence, R. I.

GROUND SPICES.

(Chief adulterants found: flour, starches of various kinds, turmeric.)

CAYENNE PEPPER.

Casey & Bacon.
E. R. Durkee.
Globe Mills.
New England Coffee and Spice Mills.
I. W. Sprague, Providence, R. I.
Tropical Mills.
Union Spice Company, New York.

GINGER.

Casey & Bacon.
E. W. Ropes, New York.
G. W. Yerks, Albany.

MACE.

Bacon & Stickney, New York.
Bennett & Sloan, New York.
Knickerbocker Mills, New York.
F. H. Leggett, New York.
Springfield Coffee and Spice Company.
Taylor & Staley, Troy.
S. R. Van Duzer, New York.

MUSTARD.

J. B. Anthony, Troy.
Ardenter Mustard.
Austin & Rich, New York.
Bacon & Stickney.
Blackwell & Co., 40 Oxford street.
Boston Mills.
Colburn's Mustard.
Cole & Firth.
Colman's Mustard.
Crescent Mills, Connecticut.
Curlew & Sons.
Durham Mustard.
E. R. Durkee's Mustard.
Empire Mills.
English Mustard.
Golding & Co.
Hope Mills, Providence, R. I.
Imperial.
India Mills, New York.
Judson, Parsons & Haskell, Albany.
Knickerbocker Mills, New York.
London Mustard.
London Extra Strong.
Mather Bros., Albany.
Matthews, Underhill & Co., New York.
Quinnipiac Mills, Conn.
E. W. Ropes, New York.
Russian.
Springfield Coffee and Spice Company.
Spurr's Mustard.
Tiger Mills, New York.
Union Spice Company, New York.

BLACK PEPPER.

Allyn & Blanchard, Hartford
Casey & Bacon.
Colburn's.
Crescent Mills, Connecticut.
E. R. Durkee, New York.
Globe Mills.
Haskell & Adams.
Lester, Providence, R. I.
New Bedford Mills.
Windsor Mills, New York.
Quinnipiac Mills, Connecticut.
E. W. Ropes, New York.
J. E. Rounds & Co., Providence, R. I.
Sands', Hartford, Conn.
I. W. Sprague, Providence, R. I.
Springfield Coffee and Spice Company.
Union Spice Company, New York.

WHITE PEPPER.

Auger, Tuttle & Co., Connecticut.
E. Howard.
pringfield Coffee and Spice Company.
Union Spice Company, New York.
Wilson, Pratt & Co., New York.

The above lists do not represent the only brands of adulterated foods that are found on the market, but such as the Massachusetts, New Jersey, and Canadian analysts found on analysis to be adulterated within the meaning of their laws.

The copies of foreign laws, decrees, and regulations concerning the repression of adulterations practiced on articles of food are continued from last year's report, and comprise all such as I have been able to obtain, except local police measures.

Respectfully submitted.

EDGAR RICHARDS,
Microscopist.

Hon. JOHN W. MASON,
Commissioner of Internal Revenue.

FOREIGN LAWS, DECREES, AND REGULATIONS CONCERNING THE REPRESSION OF ADULTERATIONS PRACTICED ON ARTICLES OF FOOD AND OF DRINK, CONTINUED FROM PAGE CCIX, REPORT FOR 1888.

CANADA.

[From an official copy.]

CHAPTER 107.

An Act respecting the Adulteration of Food, Drugs, and Agricultural Fertilizers.

Her Majesty, by and with the advice and consent of the Senate and House of Commons of Canada, enacts as follows:

Short title.

1. This act may be cited as "*The Adulteration Act,*" 48-49 V., c. 67, s. 1.

Interpretation.

2. In this Act, unless the context otherwise requires—

(*a*) The expression "food" includes every article used for food or drink by man or by cattle;

(*b*) The expression "drug" includes all medicines for internal or external use for man or for cattle;

(*c*) The expression "agricultural fertilizer" means and includes every substance imported, manufactured, prepared or disposed of for fertilizing or manuring purposes, which is sold at more than ten dollars per ton and which contains phosphoric acid, or ammonia or its equivalent of nitrogen;

(*d*) The expression "officer" means any officer of Inland Revenue, or any person authorized under this Act or "*The Fertilizers Act*" to procure samples of articles of food, drugs or agricultural fertilizers and to submit them for analysis;

(*e*) Food shall be deemed to be "adulterated" within the meaning of this act—

(1) If any substance has been mixed with it, so as to reduce or lower or injuriously affect its quality or strength;

(2) If any inferior or cheaper substance has been substituted, wholly or in part, for the article;

(3) If any valuable constituent of the article has been wholly or in part abstracted;

(4) If it is an imitation of, or is sold under the name of, another article;

(5) If it consists wholly or in part of a diseased or decomposed, or putrid or rotten animal or vegetable substance, whether manufactured or not, or in the case of milk or butter, if it is the produce of a diseased animal, or an animal fed upon unwholesome food;

(6) If it contains any added poisonous ingredient, or any ingredient which may render such an article injurious to the health of a person consuming it;

(*f*) Every drug shall be deemed to be "adulterated" within the meaning of this act—

(1) If, when sold, or offered or exposed for sale, under or by a name recognized in the British or United States Pharmacopœia, it differs from the standard of strength, quality or purity laid down therein;

(2) If, when sold, or offered or exposed for sale, under or by a name not recognized in the British or United States Pharmacopœia, but which is found in some other generally recognized pharmacopœia or other standard work on *materia medica*, it differs from the standard of strength, quality or purity laid down in such work;

(3) If its strength or purity falls below the professed standard under which it is sold or offered or exposed for sale;

(*g*) *Provided*, That the foregoing definitions as to the adulteration of food and drugs shall not apply—

(1) If any matter or ingredient not injurious to health has been added to the food or drug because the same is required for the production or preparation thereof as an article of commerce, in a state fit for carriage or consumption, and not fraudulently to increase the bulk, weight or measure of the food or drug, or to conceal the inferior quality thereof, if such articles are distinctly labeled as a mixture, in conspicuous characters, forming an inseparable part of the general label, which shall also bear the name and address of the manufacturer;

(2) If the food or drug is a proprietary medicine, or is the subject of a patent in force, and is supplied in the state required by the specification of the patent;

(3) If the food or drug is unavoidably mixed with some extraneous matter in the process of collection or preparation;

(4) If any articles of food not injurious to the health of the person consuming the same are mixed together and sold or offered for sale as a compound, and if such articles are distinctly labeled as a mixture, in conspicuous characters, forming an inseparable part of the general label, which shall also bear the name and address of the manufacturer;

(*h*) Every agricultural fertilizer shall be deemed to be "adulterated" within the meaning of this Act, if, when sold, offered or exposed for sale, the chemical analysis thereof shows a deficiency of more than 1 per cent. of any of the chemical substances, the percentages whereof are required to be specified in the certificate, by "*The Fertilizers Act*" required to be affixed to each barrel, box, sack or package containing the same, or (if the agricultural fertilizer is in bulk) to be produced to the inspector; or if it contains less than the minimum percentage of such substances required by the said Act to be contained in such fertilizer. 48–49 V., c. 67, s. 2.

Analysis.

3. The Governor in Council may appoint one or more persons possessing competent medical, chemical and microscopical knowledge as analysts of food, drugs and agricultural fertilizers purchased, sold, or exposed or offered for sale within such territorial limits as are assigned to each of them respectively, and may also select from among the aforesaid analysts so appointed, or may appoint, in addition thereto, a chief analyst, who shall be attached to the staff of the Department of Inland Revenue at Ottawa.

2. No analyst shall be appointed until he has undergone an examination before a special examining board appointed by the Governor in Council, and until he has obtained from such board a certificate setting forth that he is duly qualified to perform the duties attached to the office of analyst. 48–49 V., c. 67, s. 3; 49 V., c. 41, s. 1.

4. The Governor in Council may cause such remuneration to be paid to such chief analyst and to such analysts as he deems proper, and such remuneration, whether by fees or salary, or partly in one way and partly in the other, may be paid to them out of any sums voted by Parliament for the purposes of this Act. 48–49 V., c. 67, s. 4.

5. The officers of Inland Revenue, the inspectors and deputy inspectors of weights and measures, and the inspectors and deputy inspectors acting under "*The General Inspection Act*," or any of them, shall, when required so to do by any regulation made in that behalf by the Minister of Inland Revenue, procure and submit samples of food, drugs or agricultural fertilizers suspected to be adulterated, to be analyzed by the analysts appointed under this Act. 48–49 V., c. 67, s. 5.

6. The council of any city, town, county or village may appoint one or more inspectors of food, drugs and agricultural fertilizers; and such inspectors shall, for the purposes of this Act, have all the powers by this Act vested in officers of Inland

Revenue; and any such inspector may require any public analyst to analyze any samples of foods, drugs or agricultural fertilizers collected by him, if such samples have been collected in accordance with the requirements of this Act:

2. The said analyst shall, upon tender of the fees fixed for the analysis of such class of articles by the Governor in Council, forthwith analyze the same, and give the inspector a certificate of such analysis:

3. Such inspector may prosecute any person manufacturing, selling, or offering or exposing for sale within the city, county, town or village for which he is appointed inspector, any article of food, drug or agricultural fertilizer which has been certified by any public analyst to have been adulterated within the meaning of this Act:

4. Notwithstanding any other provision of this Act in respect of the disposition of penalties, all penalties imposed and recovered at the suit of any such inspector shall be paid into the revenue of the city, county, town or village by the council of which such inspector was appointed, and may be distributed in such manner as the council of such city, county, town or village by by-law directs. 48-49 V., c. 67, s. 6.

7. Any officer may procure samples of food, drugs or agricultural fertilizers which have not been declared exempt from the provisions of this Act, from any person who has such articles in his possession for the purpose of sale, or who sells or exposes the same for sale; and he may procure such samples either by purchasing the same or by requiring the person in whose possession they are to show him and allow him to inspect all such articles in his possession, and the place or places in which such articles are stored, and to give him samples of such articles, on payment or tender of the value of such samples. 48-49 V., c. 67, s. 7.

8. If the person who has such articles in his possession, or his agent or servant, refuses or fails to admit the officer, or refuses or omits to show all or any of the said articles in his possession, or the place in which any such articles are stored, or to permit the officer to inspect the same, or to give any samples thereof, or to furnish the officer with such light or assistance as he requires, when required so to do in pursuance of this Act, he shall be liable to the same penalty as if he knowingly sold or exposed for sale adulterated articles knowing them to be adulterated. 48-49 V., c. 67, s. 8.

9. The officer purchasing any article with the intention of submitting the same to be analyzed, shall, after the purchase has been completed, forthwith notify the seller or his agent selling the article, of his intention to have the same analyzed by the public analyst, and shall, except in specific cases, respecting which provision is made by the Governor in Council, divide the article into three parts—to be then and there separated, and each part to be marked and sealed up or fastened up, as its nature permits—and shall deliver one of the parts to the seller or his agent, if required by him so to do:

2. He shall transmit another of such parts to the Minister of Inland Revenue for submission to the chief analyst in case of appeal, and shall submit the remaining part to the analyst for the district within which the samples were taken, unless otherwise directed by the Minister of Inland Revenue. 48-49 V., c. 67, s. 9.

10. The person from whom any sample is obtained under this Act may require the officer obtaining it to annex to the vessel or package containing the part of the sample which he is hereby required to transmit to the Minister of Inland Revenue the name and address of such person, and to secure, with a seal or seals belonging to him, the vessel or package containing such part of the sample, and the address annexed thereto, in such manner that the vessel or package can not be opened, or the name and address taken off, without breaking such seals; and the certificate of the chief analyst shall state the name and address of the person from whom the said sample was obtained, that the vessel or package was not open, and that the seals, securing to the vessel or package the name and address of such person, were not broken until such time as he opened the vessel or package for the purpose of making his analysis; and in such case no certificate shall be receivable in evidence, unless there is contained therein such statement as above, or a statement to the like effect. 48-49 V., c. 67, s. 10.

11. When the officer has, by either of the means aforesaid, procured samples of the articles to be analyzed, he shall cause the same to be analyzed by one of the analysts appointed under this Act, and if it appears to the analyst that the sample is adulterated within the meaning of this Act, he shall certify such fact, stating in such certificate, in the case of an article of food or a drug, whether such adulteration is of a nature injurious to the health of the person consuming the same; and the certificate so given shall be received as evidence in any proceedings taken against any person in pursuance of this Act, subject to the right of any person against whom proceedings are taken to require the attendance of the analyst, for the purpose of cross-examination. 48-49 V., c. 67, s. 11.

12. If the vendor of the article respecting which such certificate is given, deems himself aggrieved thereby, he may, within forty-eight hours of the receipt of the first notification of the intention of the officer or other purchaser to take proceedings

against him (whether such notification is given by the purchaser or by the ordinary process of law), notify the said officer or purchaser in writing that he intends to appeal from the decision of the analyst to the judgment of the chief analyst: and in such case the officer or purchaser shall transmit such notification to the chief analyst, and the chief analyst shall, with all convenient speed, analyze the part of the sample transmitted to the Minister of Inland Revenue for that purpose, and shall report thereon to the said Minister; and the decision of such chief analyst shall be final, and his certificate thereof shall have the same effect as the certificate of the analyst in the next preceding section mentioned. 48-49 V., c. 67, s. 12.

13. Every analyst appointed under this Act shall report quarterly to the Minister of Inland Revenue the number of articles of food, drugs and agricultural fertilizers analyzed by him under this Act during the preceding quarter, and shall specify the nature and kind of adulterations detected in such articles of food, drugs and agricultural fertilizers; and all such reports, or a synopsis of them, and the names of the vendors or persons from whom obtained, and of the manufacturers when known, shall be printed and laid before Parliament as an appendix to the annual report of said Minister. 48-49 V., c. 67, s. 13.

Adulteration.

14. No person shall manufacture, expose or offer for sale, or sell any food, drug or agricultural fertilizer which is adulterated within the meaning of this Act. 48-49 V., c. 67, s. 14.

15. If milk is sold, or offered or exposed for sale, after any valuable constituent of the article has been abstracted therefrom, or if water has been added thereto, or if it is the product of a diseased animal or of an animal fed upon unwholesome food, it shall be deemed to have been adulterated in a manner injurious to health, and such sale, offer or exposure for sale shall render the vendor liable to the penalty hereinafter provided in respect to the sale of adulterated food; except that skimmed milk may be sold as such if contained in cans bearing upon their exterior, within twelve inches of the tops of such vessels, the word "skimmed" in letters of not less than two inches in length, and served in measures also similarly marked; but any person supplying such skimmed milk, unless such quality of milk has been asked for by the purchaser, shall not be entitled to plead the provisions of this section as a defence to or in extenuation of any violation of this Act:

2. Nothing in this section shall be interpreted to permit or warrant the admixture of water with milk, or any other process than the removal of cream by skimming. 48-49 V., c. 67, s. 15.

16. Vinegar sold, or offered or exposed for sale, shall be deemed to be adulterated in a manner injurious to health if any mineral acid has been added thereto, or if it contains any soluble salt having copper or lead as a base thereof, whether such mineral acid or salt is added, either during the process of manufacture or subsequently. 48-49 V., c. 67, s. 16.

17. Alcoholic, fermented or other potable liquors sold, or offered or exposed for sale, shall be deemed to have been adulterated in a manner injurious to health if they are found to contain any of the articles mentioned in the schedule to this Act or any article hereafter added to such schedule by the Governor in Council. 48-49 V., c. 67, s. 17.

18. The Governor in Council may, from time to time, declare certain articles or preparations exempt in whole or in part, from the provisions of this Act, and may add to the schedule to this Act any article or ingredient, the addition of which is by him deemed necessary in the public interest; and every Order in Council in that behalf shall be published in the *Canada Gazette*, and shall take effect at the expiration of thirty days from the date of such publication. 48-49 V., c. 67, s. 18.

19. The Governor in Council shall, from time to time, cause to be prepared and published, lists of the articles, mixtures or compounds declared exempt from the provisions of this Act, in accordance with the next preceding section, and shall also, from time to time, fix the limits of variability permissible in any article of food or drug, or compound, the standard of which is not established by any such pharmacopœia or standard work, as is hereinbefore mentioned; and the Orders in Council fixing the same shall be published in the *Canada Gazette*, and shall take effect at the expiration of thirty days after the publication thereof. 48-49 V., c. 67, s. 19.

20. Whenever any article of food, any drug, or any agricultural fertilizer is reported by any analyst as being adulterated within the meaning of this Act, the Minister of Inland Revenue may, if he thinks fit, order such article, and all other articles of the same kind and quality which were in the same place at the time the article analyzed was obtained, to be seized by any officer of Customs or Inland Revenue, and detained by him until an analysis of samples of the whole is made by the chief analyst. 48-49 V., c. 67, s. 20.

21. If the chief analyst reports to the Minister of Inland Revenue that the whole

or any part of such articles are adulterated, the Minister may declare such articles, or so much thereof as the chief analyst reports as being adulterated, to be forfeited to the Crown; and such articles shall thereupon be disposed of as the Minister directs. 48-49 V., c. 67, s. 21.

Penalties.

22. Every person who willfully adulterates any article of food or any drug, or orders any other person so to do, shall—

(*a*) If such adulteration is, within the meaning of this Act, deemed to be injurious to health, for the first offense incur a penalty not exceeding $50 and not less than $10, and costs, and for each subsequent offense a penalty not exceeding $200 and not less than $50, and costs;

(*b*) If such adulteration is, within the meaning of this Act, deemed not to be injurious to health, incur a penalty not exceeding $30, and costs, and for each subsequent offense a penalty not exceeding $100 and not less than $50, and costs. 48-49 V., c 67, s. 22.

23. Every person who, by himself or his agent, sells, offers for sale, or exposes for sale, any article of food or any drug, which is adulterated within the meaning of this Act, shall—

(*a*) If such adulteration is, within the meaning of this Act, deemed to be injurious to health, for a first offense incur a penalty not exceeding $50, and costs, and for each subsequent offense a penalty not exceeding $200 and not less than $50, and costs:

(*b*) If such adulteration is, within the meaning of this Act, deemed not to be injurious to health, incur for each such offense, a penalty not exceeding $50 and not less than $5, and costs:

2. Provided, that if the person accused proves to the court before which the case is tried that he did not know of the article being adulterated, and shows that he could not, with reasonable diligence, have obtained that knowledge, he shall be subject only to the liability to forfeiture under the twenty-first section of this Act. 48-49 V., c. 67, s. 23.

24. Every compounder or dealer in, and every manufacturer of intoxicating liquors, who has in his possession or in any part of the premises occupied by him as such, any adulterated liquor, knowing it to be adulterated, or any deleterious ingredient specified in the schedule hereto, or added to said schedule by the Governor in Council, for the possession of which he is unable to account to the satisfaction of the court before which the case is tried, shall be deemed knowingly to have exposed for sale adulterated food, and shall incur for the first offense a penalty not exceeding $100, and for each subsequent offense a penalty not exceeding $400. 48-49 V., c. 67, s. 24.

25. Every person who knowingly attaches to any article of food, or any drug, any label which falsely describes the article sold, or offered or exposed for sale, shall incur a penalty not exceeding $100 and not less than $20, and costs. 48-49 V., c. 67, s. 25.

26. Every penalty imposed and recovered under this Act shall, except as herein otherwise provided, and except in the case of any suit, action or prosecution brought or instituted under the provisions of the next following section, be paid over to the Minister of Finance and Receiver-General, and shall form part of the Consolidated Revenue Fund. 48-49 V., c. 67, s. 26.

General Provisions.

27. Nothing herein contained shall be held to preclude any person from submitting any sample of food, drug or agricultural fertilizer for analysis to any public analyst, or from prosecuting the vendor thereof, if such article is found to be adulterated, but the burden of the proof of sale, and of the fact that the sample was not tampered with after purchase, shall be upon the person so submitting the same:

2. Any public analyst shall analyze such sample on payment of the fee prescribed in respect of such article or class of article by the Governor in Council. 48-49 V., c. 67, s. 27.

28. Any expenses incurred in analyzing any food, drug or agricultural fertilizer, in pursuance of this Act, shall, if the person from whom the sample is taken is convicted of having in his possession, selling, offering or exposing for sale, adulterated food, drugs or agricultural fertilizers, in violation of this Act, be deemed to be a portion of the costs of the proceedings against him, and shall be paid by him accordingly; and in all other cases such expenses shall be paid as part of the expenses of the officer, or by the person who procured the sample, as the case may be. 48-49 V., c. 67, s. 28.

29. The Governor in Council may, from time to time, make such regulations as to him seem necessary, for carrying the provisions of this Act into effect. 48-49 V., c. 67, s. 29.

30. The provisions of "*The Inland Revenue Act*," whether enacted with special ref-

nce to any particular business or trade, or with general reference to the collection he revenue, or the prevention, detection or punishment of fraud or neglect in re- ion thereto, shall extend, apply and be construed and shall have effect with ref- nce to this Act, as if they had been enacted with special reference to the matters d things herein provided for:

2. Every penalty imposed under this Act may be enforced and dealt with as if im- sed under the said Act, and every compounder, and the apparatus used by him, and e place in which his business is carried on, and the articles made or compounded by m, or used in compounding any such article, shall be "subject to excise" under the id Act. 48–49 V., c. 67, s. 30.

Schedule.

Coculus indicus, chloride of sodium (otherwise common salt), copperas, opium, ayenne pepper, picric acid, Indian hemp, strychnine, tobacco, darnel seed, extract f logwood, salts of zinc, copper or lead, alum, methyl alcohol and its derivatives, myl alcohol, and any extract or compound of any of the above ingredients.

ITALY.

[Translated from Revue Internationale des Falsifications, Vol. II.]

There does not exist in Italy any special regulations relative to the adulterations f commodities for food and to the employment in their manipulation of injurious sub- tances.

This duty is left to the Italian municipalities to include in their regulations on ublic hygiene all measures intended to secure the execution of these enactments, nd to whom likewise belongs the supervision of the sale of commodities and products or food.

LAW OF 1865.

ART. 17. The following trades and industries are placed under the supervision of he boards of health (conseils sanitaires): druggists, dealers in spirituous liquors, onfectioners, dealers in medicinal herbs, manufacturers and dealers in chemical prod- cts, manufacturers of mineral waters and mud baths, manufacturers of beer, aer- ted waters, and other artificial beverages.

ART. 16. In case of indications of injurious alterations of substances for food or edicine, or of preparations susceptible of carrying injury to health, the boards shall eport the facts to the higher authority, who shall proceed to the inspection of the spected merchandise, of the factories or stores in which the articles are found.

ART. —. The supervision of the syndics in matters of health extends, in public laces, first, to foods and beverages placed on sale, altered or spoiled, or in such con- itions as may be injurious.

REGULATIONS OF SEPTEMBER 6, 1874.

ART. 6. The syndics are to be assisted by a municipal health commission.

ART. 28. The boards of health of the districts will look after the good quality of oods.

ART. 52. The supervision of the wholesomeness of foods placed on sale belongs pecially to the syndics, who exercise it personally, or by means of the municipal ealth commissions.

ART. 53. Among the foods are included not only eatables but also beverages.

ART. 54. These shall be considered unwholesome: 1. Fruits spoiled or unripe; 2. oods spoiled, as putrid meats, altered grains, rotten vegetables, fish that have com- enced to putrefy, etc.; 3. Foods adulterated by means of dissimilar and dangerous ubstances; 4. The flesh of animals dying from disease; 5. Beverages adulterated by he mixture of noxious substances of whatsoever nature.

ART. 55. The use of such foods and beverages shall be severely prohibited, without ny exception, according to the method which the municipalities shall fix in their gulations on public hygiene.

TURIN.

REGULATION OF SEPTEMBER 18, 1874.—TITLE III.

ART. 14. The municipal agents will make it their duty also, by means of visits, to hich they may proceed at whatever time or whatever hour it may be, and will ex- cise supervision over the markets, and the places of deposit or sale. They may, ac-

according to the case, place under sequestration and even destroy substances recognized as spoiled and injurious, observing the necessary precautions not to violate private domicile.

ART. 17. In the manufacture of substances for food or for beverages in which any coloring matters are employed, all those are forbidden which may be injurious. In the manufacture of utensils or vessels intended for the preparation of foods and beverages, metallic alloys must not be employed in which lead figures more than one-tenth and antimony more than one-half of 1 per cent.

In bread-making, the use of brines, plaster, steatite, sulphate of copper, or of any similar substance whatsoever which alters the intrinsic quality, even if this substance is not injurious, is forbidden.

In the mills and manufactories, where they break and grind commodities for food, they must neither break nor grind any other substances.

In the places of trade or in the public streets, where are retailed any commodities for food and beverages, the utensils must be kept with extreme cleanliness; metallic vessels intended to contain or transport such articles should be tinned with a tin which does not contain more than 0.5 per cent. of lead.

Ice-houses are submitted to a special supervision, especially those which are intended for the preservation of meats.

ART. 19. It is forbidden to sell or keep in the public markets wine blended, in excessive or immoderate proportions, with plaster, with injurious substances, with preparations of copper, lead, or alum, with mineral acids, with an infusion of bitter almonds, cherry-laurel, vegetable lac after flowering, earthy salts, or of wine that has suffered the commencement of putrefaction (ropy wine);

Brandy adulterated with darnel, cherry-laurel, stramonium, alum, sulphuric acid, or other injurious substances;

Beer, in the manufacture of which there has been employed the seeds of sabadilla, of the veratrum, any picric acid, strychnine, colocynth, the macerated leaves of the menyanthes, any poppy heads, calcareous salts, or which has been adulterated by salts of copper or lead, proceeding from the vessels employed.

Text of the proposed law presented to Parliament by the Ministry.

1. It is falsification or sophistication if any one has added to wines any ingredient whatsoever not identical to those which the nature of the wine allows. Even if these substances are identical to those which are naturally in the wine, it shall be considered as falsified or sophisticated when their addition shall exceed in quantity within certain limits, the proportions which are found ordinarily in the wine.

2. Manufactured wines shall not be placed on the market unless accompanied by a notice which indicates explicitly and with the greatest clearness the nature of the merchandise. In default of this notice the wine shall be regarded as (having been declared) natural.

3. A royal decree, delivered on the motion of the Minister of Agriculture, Industry, and Commerce, and with a view of the execution of the present law, shall indicate what are the substances the use of which is prohibited in the manufacture of wines, and in what (limits of) quantities they may be tolerated.

4. The violations of Arts. 2 and 3 of the present law shall be punished by a fine of from 51 to 500 francs and the wine falsified or sophisticated shall be confiscated, without prejudice to the higher penalties provided by the Penal Code against those who have rendered themselves guilty of other crimes.

5. If a seller refuses to sell any wine to the authorities or to a private person who declares his wish to buy with a view of having an analysis made of it, or if he wishes to furnish but an insufficient quantity for this analysis, he may be punished with a fine of 100 francs or more.

PORTUGAL.

[Translated from Revue Internationale des Falsifications, Vol. II.]

LAW OF DECEMBER 3, 1886, ON THE ORGANIZATION OF PUBLIC HYGIENE.

ART. 17. It is the duty of the administrator, in his commune or his quarter, to have the supervision and to look after all that concerns the public health, in conformity with the laws, regulations and orders of the civil governor of the district, and especially * * *

11. To proceed in course of law against those who manufacture or sell any articles, the use of which may necessarily be injurious to health. * * * 16. To visit * * * the shops, the establishments where are sold any articles of food and beverages;

restaurants, markets, slaughter-houses, grain warehouses, public fountains and wells, proceeding against those who shall have transgressed the health regulations; also to inspect the articles of food * * * which the notices of the custom-house or the orders of the directors or Government shall have described. 17. To inspect, in conformity with the law of July 20, 1855, the commodities for food, the provisions for pure water, on vessels which transport colonists.

In the visits and police inspections the administrator shall always be accompanied by the health deputy or by another physician.

ART. 18. In each of the Continental communes of the Realm, and in the isles adjacent, there shall be one health deputy, instructed to give his advice to the administration of the commune in all questions of public health which may demand technical knowledge.

ART. 95. Whoever shall directly offend any agent of the sanitary police publicly in his presence and in the exercise of his functions or on the occasion of his functions, shall be punished with an imprisonment of from one month to one year.

The offense which consists entirely of injurious deeds shall be punished by banishment for a period which shall not exceed six months.—(Penal Code, Arts. 181 and 182.)

LISBON.

REGULATIONS OF THE HEALTH DEPARTMENT, AUGUST 22, 1881.

ART. 12. The articles of food which shall appear to be adulterated shall be analyzed in a special laboratory. These analyses shall be supervised by the director of the bureau of health, and carried out by an analyst, who shall be a chemist skilled in such work, and by a microscopist, who shall have proved his competence for such analyses.

ART. 13. This laboratory shall be accessible to the chief and deputy officers of health of the district of Lisbon and to the Professor of Hygiene of the Medico-Surgical School.

ART. 14. Every citizen of the city of Lisbon may demand that they analyze a suspected article of food, on condition that he indicates exactly the day and the place of sale where he shall have bought the article which he wishes to be analyzed.

ART. 15. A special regulation shall indicate the price of analyses made on the demand of private persons and the fine which shall be paid by those who sell commodities for food adulterated or damaged.

[The Municipal Health Laboratory of Lisbon has issued a set of instructions, under date of June 22, 1882, to be followed by private persons submitting samples for analysis. The quantity of substance, whether solid or liquid, necessary for analysis is stated in tables, giving also the charge for such analysis, whether quantitative or qualitative.

The care to be taken in procuring a fair average sample of the substance, to guard against extraneous matter and to have the vessel in which the sample is placed scrupulously clean, is especially mentioned. Glass and porcelain vessels and wooden or cardboard boxes must be used; paper bags are not allowed. No printed or colored paper should be used for wrapping samples. Bottles should be fastened with a new cork and sealed.

All samples submitted for chemical or microscopical analysis must be accompanied by a statement showing whether a qualitative or quantitative chemical analysis is demanded; the name, profession, and residence of the applicant; the name of the vendor and the locality of the sale; the name under which the seller delivered the article and the price at which it was sold. The price for the analysis must accompany the statement. A receipt is given for the sample and money, which receipt, on the completion of the analysis and on due notification of that fact to the applicant, is exchanged for the official certificate of the results of the analysis.

The samples when received are numbered, and the special statements are entered in a proper register. Samples are analyzed in the order in which they were received, and only in exceptional cases, where the perishable nature of the article or the urgency of the case demands prompt action, is it disregarded. The results of the analysis are kept in a register. The certificates are signed by the director and the analyst.]

SWEDEN.

[Translated from Revue Internationale des Falsifications, Vol. II.]

LAW OF SEPTEMBER 25, 1874, CONCERNING THE SANITARY SERVICE OF THE REALM.

SEC. 15. 1. Foods or beverages which, accompanied by putrefaction, defect in preparation, or from any other cause, may become dangerous to public health, shall not be sold in the cities. 2. At the time of epidemics or in any other circumstance, the committee of health shall prohibit, as long as the circumstances shall require it, the sale of green fruits or any other fruits or foods, it matters not what is their nature, which, according to the advice of the physicians, may be able to exert an injurious influence.

SEC. 23. If the committee, independently of the cases specified above, come to a decision, if they find it necessary, in a particular case, to establish any prohibitions and warnings in the interest of salubrity, they may, when the case is not provided for in the present law, nor in the general regulations or those especial to cities, in like manner to that which is specified in section 24, either immediately or after preliminary advertisement, fix the fines to obtain obedience to their decrees.

SEC. 24. When a scheme emanating from the initiative of a magistrate or of the committee of health is not approved by vote by the municipal council, the magistrates or the committee may defend the urgency of it before the representative of His Royal Majesty. If the scheme shall appear indispensable to the representative of His Royal Majesty, he may, if the scheme is not accepted by the communal council, issue a decree of the urgency of it, on condition always of submitting his proclamation to the approval of His Royal Majesty. The infractions of proclamations issued in the aforesaid manner shall be punished by a fine of from 2 to 100 crowns.

LAW OF 1876 ON TOXIC MATERIALS.

The sale is forbidden of:

ARTICLE 10. Children's toys painted in poisonous colors.

ART. 20. Those boxes of colors which are not supplied with a distinct label written in Swedish, indicating whether they contain any poisonous colors or not.

ART. 30. Those sweetmeats, ices, pastries, liqueurs, sirups and other articles of merchandise intended for consumption, painted or colored with poisonous substances. To place on sale any sweetmeats and other articles of merchandise intended for consumption, moulded or preserved, either in sheets of lead, or in paper colored, painted, printed or glazed with poisonous colors, or in sheets of tin containing more than 1 per cent. of lead, as well as when the aforesaid articles of merchandise are covered again with any of the said wrappers, without being immediately inclosed in a non-injurious paper, is also prohibited.

Chapter 2, § 15, 1, page 13: The commodities for food or beverages which, by deterioration, by bad preparation or by any other cause, are injurious to health, shall not be placed on sale in cities.

2. In case of epidemic or other valid cause, the College of Health may prohibit, as long as the cause exists, the sale in cities of green fruits, of certain species of fruits or other commodities for food which competent physicians may declare injurious to health.

Chapter 2, §15, 1, page 80: The prohibition of placing on sale commodities for food, beverages and fruits which are injurious to health, presupposes a surveillance which it is not always easy to obtain, as it demands varied knowledge and experience. This surveillance is, nevertheless, of so great importance that it should not be omitted, even when it can not possibly be complete in all its parts. It may be, nevertheless, helped by applying to competent persons. By the present regulation, any one can at least hinder the offering of similar commodities, when they are discovered, by returning them to the city at the expense of the vendor. When the vendor places on sale any food or beverages which he knows to be injurious, he is sentenced to a fine of from 2 to 100 crowns.

When similar commodities are equally injurious to those within as to those without the city, and that the inhabitants of the city may be able to purchase them, even when they have been warned thereof, it is better to render them harmless, even if this has to be done at the expense of the city.

The adulterations which deteriorate the nature of the merchandise, but for which they employ materials which are not injurious to health, such as to dilute milk with water, or whole milk with skimmed milk, or the mixing of chicory with coffee roasted or in powder, can not (according to Chapter 22, section 21 of the Penal Code) be charged with the offense by any other than the complainant. One shall not be able

in the meanwhile to say anything if the municipal authorities of the city have enacted on the subject of milk, as food, especially for young children and invalids, a special prohibition against and responsibility for the sale of mixed (deteriorated) milk; then it may be necessary to take measures to examine the milk.

The causes which render foods or beverages injurious to health are very diverse for different commodities.

Among the commodities for food which, from any other cause, may be injurious to health the following are especially to be noted:

The flesh of hogs suffering from trichinæ. If any one eats of bacon containing living trichinæ, these will multiply in the intestines, spreading afterwards into other parts of the body (the muscles), and producing painful sickness and often death. The trichinæ are destroyed on boiling or roasting the bacon, after it is first cut into slices or small pieces; they are not surely destroyed by pickling or by smoking. One ought, as much as possible, to have the bacon examined under the microscope by experts, but the seller who shall neglect to do so shall not be punished. American bacon often contains trichinæ.

The meat of animals suffering from contagious diseases, when they are killed, may be eaten without danger, if previously it is suitably cooked; but if the animal has suffered from glanders, this is uncertain, and persons who handle such meats, when they are raw, are exposed to catch such diseases.

The meat of animals which are known to have been afflicted with contagious diseases can not be placed on sale without the certificate of a veterinarian that it is harmless.

The meat of animals dying from disease should never be placed on sale.

Rye and often some other plants contain, in certain years, a mixture more or less great of ergots, which impart to the flour and bread a poisonous material which occasions the serious and often fatal illness called ergotism.

The milk of cows suffering from hoof-disease or from tuberculosis may be injurious when it is drank without having been cooked.

2. Green fruits are generally more difficult to digest than ripe ones. Among ripe fruits cucumbers and melons are the most difficult to digest.

Penal Laws.

Section 3. Those shall be punished, with from two to six years at hard labor, who shall have sold or otherwise delivered for the use of others any commodity for food which they knew to be falsified, if there has been employed for this falsification any substances injurious to the life or health of people. If these commodities have occasioned any serious hurt to an individual, the penalty at hard labor during six to ten years shall be imposed. If the death of any one is traced to them, the delinquent shall be sentenced to hard labor for life, or during ten years.

Those who, knowing that the commodities mentioned heretofore were falsified, shall have offered to an individual to sell them to him, shall be punished at hard labor during two years at most, if no delivery of them has taken place.

If the violation provided for by the present paragraph has been committed by a trader, or by another individual whose business consists in selling or preparing any eatables, the delinquent shall lose besides the right of carrying on this business.

Section 13. * * * It shall be the same with those who shall have sold or otherwise parted with, without remuneration, any bad articles, as if they were good; any mixed (deteriorated) articles, as if they were not mixed; or that which they know to have a blemish which they have not revealed; or who shall have sold, leased, or rented the same thing to two persons.

Letter A.

Extracts from the law of August 24, 1842, and that of June 3, 1874.

Chapter 21, Article 3, Letter C. Whosoever, with fraudulent intent, delivers any merchandise which he knows to be falsified shall be punished with imprisonment or with hard labor of the fifth degree.

Art. 5. If the products sold in the conditions prescribed by Article 3, Letter C, are foods, medicines, or other articles of consumption, and the transgressor was not ignorant that the materials employed in the manufacture or added afterwards are dangerous to life or health, the offender shall be liable to hard labor of the fourth or fifth degree. If the sale or preparation of these products constitutes his means of existence he shall be forbidden to continue this trade or this preparation.

If the violation results in serious damage caused to the health, or likewise in the loss of life, the offender shall be punished, in the first case, with hard labor of the second or third degree, in the second case with hard labor for life, or of the first or second degree.

ART. 1. Those who, with fraudulent intent, deceive by its name, quality, or profession, and occasion in this way any prejudice whatsoever shall be punished by imprisonment or by fine.

CHAP. 13, ART. 2. Whosoever, for the purpose of doing injury to the health, or making an attempt on the life of his fellow-creature, mixes poison with the merchandise of a current sale shall be punished in conformity with article 1.

ART. 3. Those who, by negligence or by accident, have caused a poisoning of this nature and who at once prevented the evil which they may have caused, do not immediately seek to make amends as much as possible, shall be punished with hard labor of the fifth degree or with imprisonment.

LETTER B.

COPY OF THE CIRCULAR OF THE DEPARTMENT OF JUSTICE TO THE PRÉFETS, OF OCTOBER 30, 1878.

The placing in circulation of foods, beverages and other articles of consumption, injurious by themselves, or mixed with any products injurious to public health, becomes from day to day more frequent. The Department requests you, consequently, M. le Préfet, to invite the Commissions of Hygiene of the cities of your jurisdiction to examine to what extent the sanitary measures taken to this time secure competent control of these products, and, in the case where the question should be determined negatively, to propose to the Communal Administration such additions and modifications as they should judge best to bring the sanitary regulations actually into force. It would be, perhaps, particularly desirable that the Commissions of Hygiene might be authorized to cause samples of suspected merchandise to be given up and, if necessary, to prohibit the placing of them on sale, which might then be given in view of the application of Article 26 of the law of May 16, 1860.

The Commissions may be able, in regard to these supplementary provisions, to be guided by the tenor of the following prescriptions, in force in the Capital, in carrying out all the modifications called for by local circumstances.

To prevent the placing on sale of injurious foods the Commission of Hygiene shall cause to be examined, at frequent intervals, the articles of merchandise sold in the markets and retail stores, as well as those stored in warehouses; it is authorized to cause samples of these articles of merchandise to be delivered.

Foods recognized to be injurious shall be destroyed, seized or rendered harmless in whatever manner it may be possible, at the expense of the offender.

In regard to meat and bacon the Commission has the right to require that they shall not be placed on sale until an examination has been made in the manner which it shall judge proper.

The Commission shall control likewise by prohibiting the sale, if there be need, of all articles the use of which may be prejudicial to public health, such as papers, toys, clothing, etc., in which there is introduced any toxic substances.

NORWAY.

[Translated from Revue Internationale des Falsifications, Vol. II.]

The penal dispositions applicable to Norway in case of falsification of foods or beverages are contained in the laws of August 20, 1842, and of June 3, 1874, Chapter 21, Article 3, Letter C, and Article 5, comprising Article 1 and Chapter 13, Article 2 and Article 3, copies of which will be found above.

To the police it belongs more especially to take all necessary measures, either to discover or to prevent the falsifications of this nature, to stop the sale of injurious foods or beverages, and to cause them to be destroyed if necessary. Without any action of the police the Commissions of Hygiene established in the different cities and rural communities who have to enforce the prescribed sanitary measures and whose decisions the police should cause to be executed, are themselves charged, in the terms of Article 3 of the law of May 16, 1860, to watch more especially that there may not be placed on sale in their respective provinces any species of injurious foods.

SANITARY REGULATION OF CHRISTIANIA, MARCH 14, 1874.

SEC. 18. The Committee (of Public Health) should, for the purpose of stopping the sale of unwholesome foods, make or direct inspections, either about the market, in the shops and small restaurants, or in the warehouses of the traders and manufacturers, and for this purpose it has a right to require that all the samples which are necessary shall be given up to it. If any unwholesome foods are discovered they should, according to the decree of the Committee, be destroyed, seized or in some manner rendered harmless, at the expense of those to whom they lawfully belong.

SEC. 20. The Committee should, as is prescribed by section 18, examine, and after the examination, forbid if it is necessary, the sale of any other merchandise the employment of which may be injurious to public health, such as those containing any poisons; for example, tapestries, children's toys, cloths, etc.

SWITZERLAND.

[Translated from Revue Internationale des Falsifications, Vol. II.]

Each Canton makes such regulations on these subjects as it pleases.

CANTON OF BASEL-CITY.

The public analyst shall, on the order of the Sanitary Judiciary Authorities, or by their instruction, analyze the substances which are pointed out to him, and make a report thereon. In the interest of the public he shall examine the commodities for food and other articles of commerce, which should be presented to him, in consideration of a suitable remuneration.

The public analyst, like the other sanitary officials, is appointed for a period of six years, by the Petty Council, on the proposal of the Sanitary College. At the expiration of this period he may be renominated.

CANTON OF ZURICH.

The duties of the sanitary physician are . . . to supervise the sale of beverages and foods, the good quality of the drinking water, and of vessels intended for alimentary uses.

CANTON OF BERN.

ORDINANCE CONCERNING INNS AND THE TRADE IN SPIRITS, 1879.

[Translated from Revue Internationale des Falsifications, Vol. II.]

[Title.]

SECTION I.—GENERAL PROVISIONS.

ART. 1. The spirituous beverages of all innkeepers or dealers, wholesale merchants also included, are submitted to the official control of the sanitary police. This control shall be exercised over beer, cider, wine, distilled beverages and liqueurs.

ART. 2. The articles of merchandise submitted to this control shall be examined:

(a) By one or two experts, who shall be nominated by the Department of the Interior for each district or for certain communes, and who may also be required to examine beverages in another district or commune.

(b) By a chemist to whom the Department of the Interior confides the charge of the scientific analyses.

ART. 3. It is the duty of the experts to examine on the spot at least once a year and without waiting for the order, the articles of merchandise of all innkeepers and dealers in their district; their visits should neither be announced nor fixed in advance; they should also make all inspections which shall be ordered by the Prefecture or by the Department of the Interior. Innkeepers and dealers are obliged to admit the experts into all places where they retail beverages, to conceal nothing from them, and to deliver gratuitously to them the samples which shall be judged necessary for the examination.

ART. 4. If the experts are able to prove that a beverage is falsified or unwholesome, or that any artificial wine is sold as natural wine, they should, after having summoned a member of the Communal Council, order the immediate sequestration of that beverage and lodge a complaint against the dealer, in conformity with Article 25 of the law of March 4, 1879. If, on the contrary, the experts are not certain that the beverage is falsified, altered or unwholesome, they will withdraw a sample

of it (for beer, wine, and cider, at least a half liter; for distilled beverages and liqueurs 200 cubic centimeters), which is to be placed under seals in the presence of the dealer and addressed to the Department of the Interior through the medium of the Prefecture.

ART. 5. The experts shall keep a register of the innkeepers and dealers in spirits in their district. For this purpose, the Prefect shall furnish them with the list each year, during the first fortnight of January.

ART. 6. Besides the reimbursement of their traveling expenses, the experts receive an indemnity of 2 francs for the examination of the articles of merchandise of an innkeeper or dealer at the time of their ordinary inspection; if it is a matter of extraordinary inspection, the Department of the Interior may grant a larger indemnity to the expert, which shall be determined in proportion to the distance from his domicile, but which, nevertheless, shall not exceed 5 francs. All these expenses shall be charged on the preferred credit of the inns.

ART. 7. The Department of the Interior is authorized, until the nomination of a Cantonal Chemist may be judged necessary, to provisionally appoint a chemist to analyze the samples of spirits which are sent in to him; it will choose him as far as possible from among those who are already public functionaries. Concerning each sample, the chemist will declare if the beverage is falsified, altered or unwholesome.

ART. 8. The Department of the Interior will then decide upon the employment or the destruction of the seized beverage, and it will take the necessary measures so that the dealer may be punished by virtue of Article 25 of the law.

The dealer is responsible for the quality of his beverages. But, if the fraud has not taken place at his house, and if he can demonstrate in a satisfactory manner that he was ignorant of the falsification, they shall content themselves with sequestering the beverage, and the dealer shall not be punished. (See, also, Article 25.) In this case, to facilitate the dealer in his legal action against the person who has sold him the falsified beverage, the Department of the Interior shall place at his disposal a copy, signed by it, of the conclusions of the chemist intrusted with the technical examination.

ART. 9. When a dealer in spirituous beverages is found guilty of falsification, the tribunal is able to, and in case of a renewal of the offense must, order the publication of the judgment.

ART. 10. The Department of the Interior is authorized to withdraw at the Cantonal frontier or in the Bureau of Ohmgeld, and to have examined, samples of alcoholic beverages addressed to innkeepers and to other dealers living in the Canton.

SECTION II.—SPECIAL PROVISIONS FOR THE DIFFERENT BEVERAGES.

A.—*Beer.*

ART. 11. Beer, recognized as such, is the beverage manufactured from hops, malt, and water.

ART. 12. It is forbidden, under penalty of condemnation—

(*a*) To replace by other substances the principle starch and aroma of hops;

(*b*) To color the beer artificially with fraudulent intent;

(*c*) To clarify this beverage by means of substances injurious to health, as for example the bisulphite of lime;

(*d*) To deal in beer which has undergone acetic fermentation or any other alteration, even when the acidity has been neutralized by the addition of salts (bicarbonate of soda, etc.). The authorities shall decide on the employment of the beverage thus altered.

ART. 13. Beer pumps must be established in a manner not to produce any alteration in this beverage by metallic or other substances. The air used for the pressure must proceed directly from the free atmosphere or from a well-ventilated locality and be of a perfect purity. The pipes must be of pure tin; they must also be able to be placed in communication with a steam-boiler or a water-main, and they should be cleaned every day.

ART. 14. The local police authorities are charged to regularly make sure of the good condition of the beer pumps, and they have the right, after having lodged a complaint, to prohibit the use of those which are in a bad condition.

B.—*Cider.*

ART. 15. Cider, recognized as such, is the fermented beverage produced from the non-falsified juice of pipped fruits.

C.—*Wine.*

ART. 16. Wine, recognized as such, is the fermented and unaltered juice of grapes. It is called natural wine.

ART. 17. The coloring matter of red wines must only proceed from the skin of the grapes. The addition of all other coloring substances, artificial or natural, is a fraud. The use of processes which consist in taking out the color from wines is, therefore, also prohibited.

ART. 18. The coloring of wines with substances injurious to health, such as fuchsine, constitutes at the same time a graver offense, that of causing injury to the public health.

ART. 19. The dealer in wines made by the Gall and by the Chaptal process renders himself guilty of fraud, if he permits the consumer to be ignorant of the nature of these beverages, and if he sells them for a natural wine.

ART. 20. The preparation of wine according to Pétiot's method and the sale of this product are characterized as frauds, when any one can establish with certainty that this wine was not declared as such when he inquired especially for petiotized wine.

ART. 21. The watering of wines, after the addition of a certain quantity of alcohol, must be regarded as similar to the manufacture of wine according to Pétiot's process.

ART. 22. Artificial wine, that is to say, alcoholic liquids which resemble wine, but which are not obtained by the fermentation of the unaltered juice of grapes, can not be sold under the denomination of wine, and their sale under this name must be considered and repressed as a fraud.

ART. 23. The clarification of wines must only be effected with perfectly inoffensive substances, as the whites of eggs, tannin, etc., and it is forbidden to make finings with alum and metallic salts.

Plastering must not introduce more than 2 grams of sulphate of potash per liter of wine. Nevertheless all persons who have bought or ordered natural wine have the right to refuse plastered wine, even if it contains less than 2 grams of sulphate of potash per liter.

ART. 24. Green tea or pure tannin are the only substances which may be permitted to be used to treat wines which are ropy or have become muddy.

ART. 25. The authorities will decide, according to circumstances, whether any one may make another use of dead wines or of those that have become sour, that is to say, whether any one may, for example, distil them or make use of them in the manufacture of vinegar.

On the contrary, all wines in which there shall be found any toxic metallic oxides (salts of lead, antimony, copper, etc.) shall be immediately confiscated and poured out.

ART. 26. Casks must not be sulphured except in a restricted manner and with sulphur free from arsenic. It is necessary from time to time to examine the sticks of sulphur which are used by inn-keepers and wine-merchants for this purpose.

D.—*Spirituous beverages obtained by distillation.*

ART. 27. For spirits made from potatoes or grains the provisions that apply are the Articles relative thereto of the ordinance of May 31, 1879, on the manufacture of spirits and alcohol.

ART. 28. Kirsch, spirits of prunes, pears, apples, juniper-berries, gentian, etc., must be free from any injurious foreign substances (for example, from copper in notable quantity, as in potato-spirits), and each of these beverages must contain the specified products which are furnished by the distillation of the raw materials from which it is derived. Kirsch must be examined technically with a view of ascertaining, as far as possible, whether it has really been manufactured from cherries or whether it is only an artificial mixture.

E.—*Liqueurs.*

ART. 29. Liqueurs and essences must be free from all materials or ingredients dangerous to health, and from all injurious coloring substances (arsenical fuchsine).

SECTION III.—PENALTIES AND FINAL PROVISIONS.

ART. 30. Violations of the provisions of the present ordinance shall be punished by application of Articles 34, 35, 36, and 37 of the law concerning inns and the trade in spirits.

ART. 31. The present ordinance shall take effect at once. It shall be published in the *Feuille Officielle* and inserted in the Bulletin of the Laws.

TITLE V.*

PENALTIES.

ART. 34. Those are liable to a fine of from 50 to 500 francs:

1. Who, without being in possession of an inn-keeper's license, exercise the rights that are thereto attached, or who exceed the limits of their rights. (Art. 1, 2, 8, and 11);

*Law concerning Inns, etc., May 4, 1879.

2. Who make any false declarations for the purpose of getting admitted to the benefit of the advantages mentioned in Art. 10, or who violate any obligations by them contracted;

3. Who sell spirits at retail, without being in possession of a license to sell, or without belonging to the class of dealers exempt from license by Art. 28;

4. Who abuse their permit of sale in order to exercise the rights of an inn-keeper (Art. 31, 1st paragraph), or who make false declarations relative to the distillation of the products of their soil.

The offender shall be compelled, in addition, in every case, to pay in full the total costs of the right of license.

ART. 35. Application shall also be made of the following penalties:

1. Violations of the provisions of Art. 9, 6th paragraph, 16, 18, 19, 20, 22, 23, 24, 26, 27, 31, 2d paragraph, and 32, figure 1, shall be punished by a fine of from 10 to 100 francs;

2. Violations of the provisions of Art. 25 and 32, figures 2, 3, 4, and of the provisions of the ordinance which the Executive Council shall promulgate on the inspection of the stocks of inn-keepers and dealers in spirits, shall be punished by a fine of from 50 to 500 francs, the injurious eatables and beverages shall be confiscated and destroyed, and there shall be cause to apply the provisions of Art. 233 of the Penal Code.

ART. 36. In case of a renewal of the offense, that is to say, if the individual condemned, by application of the present law, renders himself guilty of a new violation of the same law during the twelve months which follow his last final condemnation, that condemnation shall be considered as an aggravating circumstance, and the penalty imposed for the new violation may be increased to double the original fine.

If the violations of the provisions on the policing of inns (Title III) constitutes a second renewal of the offense within the space of a year, the court may, and if there exist any aggravating circumstances must, order the closing of the establishment for a term of three months at least, and declare the inn-keeper incapable of possessing an inn during the same space of time.

If the violation of the provisions on the trade in spirituous beverages (Title IV) constitutes a second renewal of the offense, the sentence may, and if there exist any aggravating circumstances must, prohibit the offender from selling spirits for a time more or less long, and decree, besides, that, under penalty of a fine of 500 francs, he is forbidden during the same space of time from selling any spirits in the locality where the infractions have been commited.

If an inn-keeper renders himself guilty of a crime or of a grave offense, he may, by sentence, be declared incapable of taking charge of an inn during a specified period or for all time, although he shall not have committed any infraction of the present law.

ART. 37. In every case where a penalty shall be imposed, the offenders shall be condemned to pay all costs, damages, and interest.

LAW CONCERNING THE TRADE IN ARTICLES FOR FOOD, FOR CONSUMPTION, AND FOR COMMON USE, AS WELL AS AMENDMENTS TO ART. 232 AND 233 OF THE PENAL CODE. (FEBRUARY 26, 1888.)

[Translated from an official copy.]

The Grand Conseil of the Canton of Bern, on the proposition of the Council of State, Decree:

ART. 1. The trade in articles for food and for consumption and such articles for common use, which are liable to be injurious to the public health, as toys, wall-papers, colors, eating, drinking, and cooking utensils, as well as petroleum (earth-oil), is subject to the surveillance of the competent authorities under the provisions of the present law.

ART. 2. A chemical laboratory will be maintained by the State as the chief place for the examination of the character of the objects designated in Article 1. The director of it will be the Cantonal Chemist. The Cantonal Chemist will be appointed by the Council of State on the proposition of the Department of the Interior, Division of Sanitary Affairs, for a term of four years. He will receive a salary of from 4,500 to 5,000 francs.

ART. 3. The police surveillance over the trade in the commodities designated in Article 1 is exercised by—

a. The local police authorities.

The functions and the powers of the local police authorities may, by vote of the Commune, be transferred to a Sanitary Commission or to a single official (inspector). As a member of a Sanitary Commission, any person who lives in any other Commune of the Canton is also eligible, as, for instance, physicians. It is also permissible for several communes to choose a common Sanitary Commission.

b. The Prefects.

c. The Department of the Interior, Division of Sanitary Affairs, and by its duly-appointed experts.

The supervision of the whole is vested in the Council of State.

ART. 4. The local police authorities designated in Article 3 and the duly-appointed experts of the Department of the Interior have, in the carrying out of the surveillance prescribed by the present law, the power to act as officials of judiciary police. (Code on the Procedure in Penal Cases, Art. 38, *et seq.*)

These inspecting officials and the police who accompany them are authorized to enter into premises in which the commodities of the kinds designated in Article 1 are exposed for sale or are stored intended to be sold, both during the usual business hours or while these premises are accessible to the public.

The inspecting officials are authorized to take, at their option, for the purpose of having them examined, samples of the commodities of the kinds designated in Article 1 which are found in the above-named premises, or which are exposed for sale, sold, or peddled about in public places, in the markets, public squares, or streets.

A receipt for the sample taken, with its valuation, shall be given to the owner, and he is entitled to the price of the sample in case a complaint does not follow, or the same is proved to be unfounded.

ART. 5. The local police authorities (Communal Council, Sanitary Commission, Inspector) will make from time to time an inspection of the quality of the wares of the dealers in articles for food, for consumption and for common use, of the kinds designated in Article 1. Innkeepers and other dealers in spirituous beverages must be submitted to such an inspection once each year at least.

A written report of the result of these inspections is annually to be transmitted by the local police authorities through the Prefect to the Department of the Interior.

The local police authorities are authorized to impose a fine of from 1 to 20 francs, provided the negligence is not too great, on any one who, through want of attention, brings to market imitated, adulterated, spoiled or injurious articles for food or consumption, as meat, butter, fruits, vegetables, etc.

The finding of the local police authorities will have the force of a legal sentence when the accused does not, within three days of the notification, enter a protest with the local police authorities. Upon such seasonable protest the finding becomes invalid and the ordinary penal process will take place.

ART. 6. The Prefect will assist the local police authorities and the experts appointed by the Department of the Interior in the carrying out of the inspections; he will place at the disposal of the same, in case of necessity, a police force. He can also order the undertaking of an inspection and the withdrawal of samples.

ART. 7. The Department of the Interior, Divison of Sanitary Affairs, may undertake, by its duly-appointed experts, from time to time, in single communes or districts, a general inspection of the articles for food and for consumption intended for sale; it can also order single investigations.

The Department of the Interior is authorized to take samples, for the purpose of having them examined, of spirituous beverages which arrive at railway stations and are addressed to any innkeeper or to a dealer in spirituous beverages living in the Canton of Bern.

ART. 8. If an inspecting official (Article 3) is in doubt of the quality of a ware of the kinds designated in Article 1, he will then inquire of the owner or consignee in regard to the origin of the same and concerning the probable cause of the suspicious condition. The given information and the duly-attested statement imparted by any person will be set forth by the inspecting official or the accompanying police officer in a written report.

From the suspected commodity the inspecting official will take at least two samples, and will seal the same with the official seal and with a label, on which the name of the owner, the entry of the time and the place of collection, and the signature of the official will be set forth.

The owner or consignee is also entitled on demand to take out one such sample.

The inspecting official will place the suspected commodity as a rule under sequestration. Sequestration shall be imposed when the commodity appears to be imitated, adulterated or spoiled, and especially when it is injurious to health. (Compare Articles 64 and 65 of the Code on the Procedure in Penal Cases.)

The Presidents of the Communal Councils and the Prefects are authorized, in imposing sequestration—especially of materials injurious to health—to destroy them when the nature of the materials do not permit of their preservation. In case the sequestration proves to be unwarranted, the right to sue for damages is reserved to the owner.

ART. 9. If an inspecting official believes the existence of a penal action to be probable, he will lodge a complaint against the same conformably to Article 45 of the Code on the Procedure in Penal Cases, and transmit therewith the written report of the reasons for suspicion (Article 8, paragraph 1), as well as the samples.

If the inspecting official thinks a further investigation of the subject to be necessary, he will forward the written report and the samples, with his account, to the Department of the Interior, which will order further proceedings.

If the suspicion of the object proves to be unfounded, the Department of the Interior will order its sequestration removed.

If, however, the existence of a penal action appears to be probable, the Department of the Interior will enter suit.

ART. 10. Whosoever refuses the entry into the premises or the withdrawal of samples, as prescribed by Article 4, or conceals the places for storage, shall be punished by a fine of from 10 to 50 francs. Article 76 of the Penal Code is also applicable, the case arising.

ART. 11. Whosoever exposes for sale commodities which, by application of the present law, were placed under sequestration, or whosoever changes the measure or the quality of the same, or makes away with such commodities, shall be punished by an imprisonment not exceeding 40 days or by a fine of from 20 to 200 francs.

ART. 12.—I

Article 232 of the Penal Code receives the following addition:

Whosoever, for the purpose of misleading in trade and commerce, designates the nature of an article for food or for consumption by false or misleading titles, by inscriptions on the top or side of the article, or in a public advertisement, or through the method of packing, or by any other way, shall be punished by a fine of from 5 to 500 francs.

II.

In place of Article 233 of the Penal Code the following provisions are imposed:

ART. 233. By imprisonment not exceeding 60 days, in addition to a fine of from 50 to 500 francs, shall be punished—

1. Whosoever, for the purpose of misleading in trade and commerce, imitates or adulterates any article for food or for consumption, or by agreement with the manufacturer sells such wares;

2. Whosoever knowingly sells any articles for food or for consumption which are spoiled, imitated or adulterated under concealment of the facts, or offers them for sale under a name intended to deceive.

If the act designated in No. 2 is done through negligence, a fine of from 10 to 300 francs shall be imposed, but when it is one of those designated in Article 5, paragraph 3, and the negligence is not too great, a fine of from 1 to 20 francs shall be imposed for the same.

ART. 233 *a*.

With an imprisonment not exceeding sixty days or by sentence to the house of correction not exceeding two years, and in either case by a fine of from 100 to 5,000 francs shall be punished—

1. Whosoever designedly shall manufacture or treat commodities which are intended for food or for consumption in such a way that their use may be prejudicial to human health; also, whosoever shall knowingly sell, offer for sale, or otherwise put upon the market commodities for food or for consumption whose use may be prejudicial to human health;

2. Whosoever designedly shall manufacture for housekeeping commodities or toys intended for domestic and industrial purposes, or for clothing, in such a manner that the intended or probable use of the same may be prejudicial to human health; also whosoever knowingly shall sell, offer for sale, or otherwise put upon the market such commodities.

If by such act a person has been unfitted for work for more than twenty days, sentence to the house of correction not exceeding five years shall be imposed; if a permanent injury has resulted, sentence to the penitentiary not exceeding eight years, and if the death of a person has been occasioned, sentence to the penitentiary for from two to ten years shall be imposed.

If one of the acts designated in this Article has been committed through negligence, imprisonment not exceeding sixty days or a fine not exceeding 500 francs shall be imposed; and when by the act an injury to the health of a person has been occasioned sentence to the house of correction not exceeding six months or a fine not exceeding 1,000 francs shall be imposed, but when the death of a person has been occasioned sentence to the house of correction not exceeding two years shall be imposed.

ART. 233*b*.

Whosoever, for the purpose of misleading in trade and commerce, imitates or adulterates wares shall be punished, provided the provisions of Articles 233 and 233*a* are not applicable, by an imprisonment not exceeding 60 days, or by a fine not exceeding

)0 francs, and if the act is committed through negligence by a fine of from 10 300 francs.

ART. 233*c*.

n the case designated in Article 233*a*, besides the penalty the confiscation of the nmodities shall be decreed, which have been produced, sold, placed on sale, or otherse put upon the market, without distinction whether they do or do not belong to s condemned; in the cases designated in Articles 233 and 233*b* confiscation may be de-ed.

If in the cases designated in Article 233*a* the prosecution or condemnation of any parular person is not practicable, the confiscation of the commodities must independtly be decreed on motion of the prosecuting attorney.

In case of doubt concerning the question whether a commodity is prejudicial or ngerous to health, the advice of the Sanitary College must be requested.

In the sentence, which shall be imposed conformably to Articles 233, 233*a*, and 233*b*, may be ordered that the condemnation is to be published in the "Amtsblatt,"* or in e or more journals, at the expense of the condemned. If the condemned has offended fore, publication must be ordered.

In the cases designated in Articles 233, 233*a*, and 233*b*, the attempt shall be punied.

If the act has been committed in the exercise of a business or occupation for the rrying on of which a license from the State is requisite, the condemned may be clared unfitted henceforth to exercise such business or occupation, or he may be spended for a period of one and not exceeding five years in the exercise of the me.

ART. 13. Dealers in articles for food or for consumption, who in addition keep artiial products (artificial wines, butter, surrogates, etc.), even when the same are ated to be solely for their own use, must make known the possession of such wares means of distinct placards in their shops, under penalty of a fine of from 5 to 100 ncs in case of omission.

ART. 14. The Council of State will enact for the execution of the present law such gulations as are necessary for the exercise of the surveillance over the trades in arles for food, for consumption or for common use which are designated in this law.

These regulations will embrace the following:

1. Certain methods of manufacture, treatment or packing of articles for food or for nsumption which are intended for sale;
2. The business of selling and offering for sale of articles for food and for consumpon of a certain quality or under a certain designation;
3. The method of procedure for the withdrawal of samples of spirituous beverages the railroad stations;
4. The slaughtering of animals and its method, also the sale of meat;
5. The employment of certain materials and colors in the manufacture of clothing, ys, wall-papers, eating, drinking, and cooking utensils, and such like;
6. The business of selling or offering for sale of petroleum of a certain quality.

Regulations of the communal authorities, which are enacted in execution of the esent law, are subject to the approval of the Council of State.

ART. 15. Whosoever contravenes the provisions of the regulations prescribed in rticle 14 shall be punished by a fine not exceeding 200 francs, or by imprisonment t exceeding three days, provided the penalties prescribed in the present law do not pply at the same time.

ART. 16. The Grand Council will determine yearly the necessary credit for the exnse of the prescribed inspections ordered by the Department of the Interior conrmably to Article 7.

ART. 17. The present law takes effect on its acceptance by popular vote. By it all actments inconsistent with it are repealed, especially Article 233 of the Penal Code, ction 5 of the law of October 31, 1869, on the manufacture of brandy and spirits, far as it relates to the manufacture of beverages prejudicial to health, and of the w of May 4, 1879, on inns, etc., the Articles 25, 32, figures 2 and 3, and Article 35, ure 2, as far as it has reference to the latter regulations.

BERN, *November* 30, 1887.

The Council of State of the Canton of Bern, after collecting the written reports on the pular vote of February 26, 1888, *testify herewith:*

The herein printed law has been accepted by 23,959 against 10,651 votes, and goes o effect forthwith.

BERN, *March* 9, 1888.

* Official journal.

REGULATION CONCERNING THE EMPLOYMENT OF COLORS INJURIOUS TO HEALTH IN THE MANUFACTURE OF ARTICLES FOR FOOD, FOR CONSUMPTION, AND FOR COMMON USE. (AUGUST 10, 1889.)

[Translated from an official copy.]

The Council of State of the Canton of Bern, in execution of Article 14, *figure* 5 *of the law concerning the trade in articles for food, etc., of February* 26, 1888, *on the proposition of the Department of the Interior, Decree:*

ART. 1. Coloring matters injurious to health, as salts of the metals: antimony, arsenic, barium, lead, cadmium, chromium, copper, mercury, uranium, zinc, tin, or bismuth; the coal-tar colors, gamboge, shall not be allowed to be employed in the manufacture of articles for food and for consumption intended for sale. The sale of such articles for food and for consumption is prohibited.

ART. 2. The packing and preservation of articles for food and for consumption, intended for sale, in wrappers and vessels, which are colored with colors injurious to health (Article 1), shall not be allowed to be employed, unless the coloring is done in such a manner that no coloring matter can be absorbed by the articles for food or for consumption in question.

ART. 3. For children's playthings (including picture-sheets, picture-books, and water-colors for children), as well as children's carriage-covers and cushions, those coloring matters are forbidden which contain arsenic, lead, cadmium, mercury, gamboge, or picric acid. Coloring matters produced otherwise from metallic salts, as well as chrome yellow and cinnabar, are only then permissible in such articles of sale when they are employed as oil colors or are covered with varnish.

The present regulation is not applicable to any color burnt into glazed or enameled wares.

ART. 4. Articles of clothing, as textile fabrics, woven goods, paper collars, leather linings, etc., also wall-papers, curtains, blinds, lamp shades, colored papers, and objects made from them must be absolutely free from arsenic and its compounds. For woven and textile fabrics also the employment of picric acid as coloring matter is forbidden.

ART. 5. Violations of the provisions of the present regulation, unless the penal provisions of the law of February 26, 1888, concerning the trade in articles for food, for consumption and for common use, are not at the same time applicable, shall be punished by a fine not exceeding 200 francs, or by imprisonment not exceeding three days.

ART. 6. This regulation will go into effect forthwith. It will be published in the "Amtsblatt" and be enrolled in the statutes.

BERN, THE 10TH OF AUGUST, 1889.

CANTON OF FRIBOURG.

[Translated from an official copy.]

LAW CONCERNING THE SANITARY POLICE.

The Grand Conseil of the Canton of Fribourg, Considering that the regulation of June 4, 1804, *concerning the sanitary police no longer answers to the needs of our times;*

That it contains, on the one hand, important deficiencies which it is urgent to complete, and on the other provisions which are no longer applicable;

That the regulation of June 5, 1846, *concerning pharmaceutists has not been published since a general revision of it in the meanwhile;*

Seeing the necessity to recast and reunite into one whole the different laws and regulations concerning the art of healing;

Considering especially that it is important to give to the sanitary administration the agents who are necessary to it, Decree:

TITLE I.—ORGANIZATION AND ADMINISTRATION.

CHAPTER I.—GENERAL PROVISIONS.

1. The sanitary administration embraces all that which concerns the health of man and that of animals, as well as the public salubrity.

2. The superior direction and inspection of the sanitary administration belongs to the Council of State.

The Council of State exercises this direction and this inspection conformably to the laws and regulations.

By virtue of Article 80 of the law of May 8, 1848, on the organization of the Council of State and of its Departments, the Police Department is specially charged with all that which treats of sanitary affairs, and for this purpose it has under its authority a Commission of Health, with the concurrence of which it acts in all circumstances of a major interest, or of a purely scientific scope,

3. The Council of State takes into consideration the resolutions and makes the regulations touching the sanitary administration, on the proposition of the Police Department.

4. All functionaries and agents of the sanitary police, the préfets, and the communal councils, as well as individuals who exercise the medical art, concur in the sanitary administration, each one in that which concerns him, conformably to the laws and regulations.

[The law sets forth the general and special attributes of the Police Department, of the Commission of Health, of the special agents of the sanitary police, in Chapters II, III, and IV. The six chapters of Title II are devoted to those "persons who exercise the medical art or any one of its branches." Title III relates to pharmacies, six chapters.]

TITLE IV.—PROVISIONS CONCERNING THE PUBLIC HEALTH AND SALUBRITY.

[Chapter I provides the measures to be taken in case of epidemic or contagious diseases; Chapter II, in regard to the succor of those asphyxiated or drowned; and Chapter III, concerning unwholesome establishments.]

CHAPTER IV.—OF THE SALE OF UNWHOLESOME ARTICLES OF FOOD.

A.—*Of slaughter-houses and the sale of unwholesome meats.*

182. The Council of State, after having heard the Police Department, prescribes all the police measures which are judged necessary to prevent the sale of unwholesome meats, especially that of calves.

For this purpose, it is authorized among other duties to determine the conditions, such as the age and the weight at which calves may be slaughtered in order to sell the flesh, the certificates and other entries, as well as the emoluments to which the measures prescribed may give rise.

183. The Council of State provides besides, if there is need, that the communal councils take the police measures which are within their jurisdiction, and the Police Department attentively sees to their observation and execution.

The district physicians and the Cantonal veterinarians are bound to lend their assistance to the communal authorities for the execution of these measures.

184. The communal authorities are besides obliged to have inspected the slaughter-houses and the sale-places of meats, and to have the greatest cleanliness observed therein, as well as to watch that it may be satisfied in regard to the prescriptions of Article 283, concerning the health certificates.

185. In addition, the public slaughter-houses and the sale of meat intended for consumption are submitted to the rigid supervision of the inspector of cattle and the veterinarian of the Canton, respectively, independently of that established by the local police.

186. No portion of any cattle, the meat of which is intended for market, shall be cut off before the special inspector of the commune or, in his absence, the inspector of cattle has examined it. The heart, lungs, liver, and other viscera shall not be removed before this examination.

In the absence of any specific regulation the proprietor of the animal slaughtered pays to the inspector 20 centimes per head for large and 5 centimes per head for small animals.

187. In the cases where meats of an inferior quality are not altogether unfit for use, the communal authorities, by themselves or by their employés, will reduce the price; they will cause to be destroyed those meats recognized as injurious or unwholesome.

188. The hawking of meats is forbidden. The transportation of meat bought by one commune in another shall not take place without the precautions required by the local regulations; in every case a health certificate issued by the inspector of the locality where the animal shall have been slaughtered must accompany the meat. The fee for this certificate is fixed at 20 centimes.

B.—*Of the sale of bread and flours.*

189. The sale of grains, flours, as well as the manufacture and sale of bread, are submitted, either in regard to the report of the quality, or in regard to weights and other measures requisite for this trade, to the following general provisions and to

those which shall be more specifically enacted by the Council of State or the local authorities in their jurisdiction.

190. Bread must be sold by weight; it is obligatory and without demand of the purchaser to weigh it for each sale.

It must be well baked, neither watery nor too hard, and made in a cleanly manner with good grain flours.

191. Grains which are largely mixed with mildew, ergot, and seeds of poisonous plants, such as tares, etc., must not be placed on sale nor be ground to flour without having been suitably cleaned.

The communal authorities will take the necessary measures to carry these provisions into effect. (Law concerning Communes and Parishes, Article 119.)

192. The police authorities are charged to confiscate unwholesome flours and bread and to bring to punishment the offenders.

C.—*Of the sale of unwholesome fruits and other articles of food.*

193. Fruits and other products of the earth before serving as nourishment to man must, in order to be entitled to be placed on sale, be ripe and of good quality.

In the contrary case the communal councils, under the surveillance of the superior police authorities, are charged to prevent the sale or to have carried out the destruction of any unwholesome fruits or other substances. (Article 119 of the law concerning the Communes.)

D.—Of the sale of wines, of beers, and other beverages which are unwholesome or falsified.

194. The sale of wines, of beer and other beverages is placed under the surveillance of the Police Department, who will see that the proper measures are taken to prevent the sale of beverages of bad quality or those falsified.

The communal councils will watch more particularly that the beverages in question, as well as milk, are not misrepresented. They will conform besides in this regard to the provisions of Article 120 of the Communal law.

[Chapters V and VI relate to burials and cemeteries. The seven chapters of Title V provide for the animal sanitary police.]

TITLE VI.—PENAL PROVISIONS.

[Chapters I, II, and III relate to violations of the provisions concerning the medical art, the mid-wives, and the pharmacies.]

CHAPTER IV.—VIOLATIONS OF THE PROVISIONS CONCERNING THE PUBLIC HEALTH AND SALUBRITY.

[364 and 365 relate to violations of the measures taken in the time of contagious diseases, epidemics, or epizootics, and of the regulations for the salubrity of habitations.]

366. Those who violate the provisions of Articles 182, 190, 191, and 194, which forbid the sale of unwholesome meats and other substances, are punished with a fine of from 4 to 60 francs, or with imprisonment of from two to thirty days.

In case of a repetition of the offense, the penalty may be raised to 120 francs fine and one month's imprisonment.

Yet, if the articles of merchandise mentioned in the first paragraph of this Article occasion the death of the person who has made use of them, or if they become for that person the cause of a serious illness or an infirmity, the penalty is solitary confinement of from three months to four years and a fine of from 200 to 1,000 francs, besides the indemnity and the interdiction, if there is need, of all business, for a time more or less long.

367. The violations of articles 186, 188, and 193 are punished with a fine of from 4 to 10 francs; in case of a repetition of the offense, the penalty is doubled, with an imprisonment of three days at most.

[The remaining Articles of this Chapter, 368–372, relate to violations of the provisions about burials and cemeteries. Chapter V considers the violations of the animal sanitary police provisions.]

CHAPTER VI.—GENERAL PROVISIONS.

385. Every violation of the laws and regulations on the sanitary police of human beings or of animals, which is not the object of a specified penal provision, is punished by an imprisonment which may not exceed fifteen days, or by a fine which may not exceed 60 francs, without prejudice to the provision of the first paragraph of Art. 355 of the present law.

386. The judge, in appointing the penalty, will take into consideration the damage proceeding from the violations of this law. He will condemn, besides, the offender, each time there is need, to the reparation of the damage.

387. Independently of the enacted penalties, the judge may always pronounce, if there is need, the confiscation or the destruction of the things which are made the object of the violation.

388. The fines imposed by virtue of the present law belong for two-thirds of the amount to the insurance fund for cattle and for the other third to the informer.

[Chapter VII sets forth the method of procedure to be followed in prosecutions for violations of the law.]

TITLE VII.—FINAL AND TRANSITORY PROVISIONS.

[393. Contains a list of the laws, regulations, and decrees abrogated by this law.]

394. The Council of State is charged with the publication and the execution of the present law, which shall enter into force at the time they shall determine. A deposit of a sufficient number of copies shall be placed at the Secretary's office of each Commune for the gratuitous disposal to the public specially concerned.

395. The Council of State will take all necessary regulatory provisions in order to put the present law into force. It will decide, also, all questions which may arise in carrying the law into execution, after having heard the Police Department.

Given at Fribourg, the 28th of May, 1850.

(By a decree of the Council of State this law went into effect July 1, 1851.)

CANTON OF GENEVA.

[Translated from official copies.]

REGULATION OF THE POLICE CONCERNING MARKETS AND PROVISIONS, MAY 1, 1877.

The Council of State, Considering Art. 385, §10, *and the general provisions of the Penal Code of October* 21, 1874; *Considering the law of October* 23, 1876, *on the penal sanction of the regulations and decrees in matters of police, made by the Council of State; Considering the advice of the Administrative Council of the City of Geneva; Decree:*

SECTION FIRST.—CONCERNING MARKETS.

§1. *General provisions.*

ART. 1. The sale of commodities for food, of eatables, of hay, of straw, of wood and other merchandise, can not take place in the markets, streets or on the public road, except in the places assigned by the municipal authority.

ART. 2. The dealers in fruits and other foods, who are stationed on the public road, shall have their scales suspended to an iron standard, fixed vertically to a shelf, or employ any other system of steady scales.

ART. 3. It is forbidden to expose for sale any foods, articles of merchandise and products damaged or unfit for consumption.

ART. 4. It is prohibited to kill game, to bleed and pluck poultry, as well as all kinds of birds, on the public road or in thoroughfares and alleys.

§ 2. Special provisions for the city of Geneva. (Arts. 5 to 11 relate to the location of rented stands, the time of holding markets, the hawking of fruits, etc., the immediate removal of all vegetable and fish debris from market passage-ways, etc.; local regulations for the city of Geneva.)

SECTION SECOND.—PROHIBITIONS CONCERNING THE PREPARATION AND THE SALE OF FOODS. COPPER UTENSILS.

ART. 12. It is enjoined on all merchants or retailers of eatables and foods to take in the preparation of these articles, the necessary precautions to avoid rendering them injurious to health.

ART. 13. The pork-butchers, eating-house keepers, restaurateurs, hotel keepers, pastry-cooks, confectioners, and merchants making use of copper utensils, must keep them well tinned, and properly maintain these articles, as well as any measures, weights and instruments which they may employ. They are especially forbidden to allow any viands to cool in copper vessels.

ART. 14. It is forbidden to sellers of vinegar to place in their casks any copper spigots.

ART. 15. It is forbidden to make use of any mineral colors (ultramarine excepted) to color bon-bons, sugar-plums, sweetmeats, marmalades, and liqueurs.

All colors derived from tar and designated under the different names of rose aniline, carmine, currant-red, bright orange-red, coffee, blue, yellow, aniline green, etc., are equally prohibited for the same purposes; the salts of lead, copper, chromium, which these aniline colors contain partly, and especially the salts of mercury and arsenic, which they frequently contain, render them very poisonous.

ART. 16. No one should employ, in order to color sweetmeats, gum-pastes and other articles heretofore designated, except cochineal, or other vegetable substances, with the exception of gamboge and the berries of poisonous fruits.

The employment of chloride of tin, or salts of tin, in order to fix these vegetable colors, is prohibited.

ART. 17. It is forbidden to directly inclose or to mold any sweetmeats in papers glazed white or colored with mineral substances (ultramarine excepted), or with aniline colors. All sweetmeats which retain moisture or which contain a liquid, must not be inclosed except in white paper without sizing. It is equally forbidden to place any sweetmeats in any box lined inside with white paper glazed or colored by mineral substances or aniline colors, and to cover them with pinkings made from the same paper.

ART. 18. All that which, at the time of the inspections which shall have been ordered by the Department of Justice and Police, shall be found injurious to health, may be, according to circumstances, seized, repaired at the expense of the proprietors, destroyed or rendered unsuitable.

SECTION THIRD.—CONCERNING COALITIONS RELATIVE TO THE SALE OF ARTICLES OF FOOD AND BEVERAGES.

ART. 19. All pacts, conventions, stipulations, coalitions, verbal or written, are prohibited, as contrary to public order, as well as all provisions of regulations, deliberations or statutes, by which the members, employés or grantees of a society of an association or of a class of individuals, should be bound to refuse to one or several specified persons the sale for cash of articles and commodities for food or beverages.

SECTION FOURTH.—PENAL CLAUSE.

ART. 20. The offenders of the present regulation are liable to petty penalties, without prejudice to the heavier penalties which may be incurred for the offense, and the damage-costs, if there is need.

REPEALING CLAUSE.

Chapter XVII of the general regulation of police of March 31, 1837 (Arts. 238 to 244); the regulations and decrees of May 13, 1848, October 24, 1865, January 14, 1870, and December 1, 1874, and generally all provisions of former regulations contrary to the present regulation, are repealed.

LAW ON THE SALE OF WINES, APRIL 7, 1883.

The Council of State of the Republic and Canton of Geneva make known that: the Grand Council, on the proposition of the Council of State, decrees as follows:

ART. 1. The qualification and the term *wine* are exclusively reserved to the products resulting from the fermentation of the juice of fresh grapes.

ART. 2. Wines which do not proceed directly from the vintage, that is to say, watered wines, wines fortified with alcohol, wines or piquettes made from dried grapes, wines of the second pressing, and generally all vinous beverages which are not the exclusive result of the fermentation of the juice of fresh grapes, shall be sold as such.

The nature of the merchandise shall be, in such cases, specified in the invoice.

ART. 3. Every manufacturer, seller and holder, is obliged to label, in a conspicuous and legible manner, the casks and receptacles used in the transportation and in the sale of wines or piquettes made from dried grapes, and of wines of the second pressing.

ART. 4. Every dealer in the beverages specified in Art. 2 should:

1. First of all make a declaration of his intentions to the Department of Justice and Police;

2. Affix in the places of sale and in a conspicuous position, the sign and the nature of the said beverages.

ART. 5. The seller who shall have refused to make the declaration prescribed by Art. 2, or infringed Art. 3 and 4 shall be punished by petty penalties.

ART. 6. Every seller who shall have knowingly deceived in regard to the nature or origin of the beverage sold, if the deception has been the cause of determining the sale, is liable to the penalties set forth in Art. 368 of the Penal Code, without prejudice to any damages or profits which may have been due to the buyer. The merchandise which shall have been made the object of the deception may be seized by the competent authority.

ART. 7. Falsified wines remain under the enforcement of Art. 370, 371 and 372 of the Penal Code and of the provisions of the Law of March 11, 1816.

TRANSITORY PROVISION.

The present Law shall take effect on the 1st of August, 1883.

Made and given at Geneva, the 7th of April, eighteen hundred and eighty-three, under the seal of the Republic and the signatures of the President and of the Secretary of the Grand Conseil.

The Council of State, Considering the Constitutional Law on *referendum facultatif*, of May 25, 1879, and the organic Law on the exercise of *referendum*, of June 25, 1879; Seeing that the text of the Law of April 7, 1883 on the sale of wines was published the 14th of April 1883, in the *Feuille d'Avis;*

Seeing that the delay of thirty days since the publication expired the 13th of May 1883 without any request for a popular vote having been formulated by the electors; Decree: The promulgation of the aforesaid Law to be executory in all the Canton from to-morrow.

GENEVA, *May* 15, 1883.

REGULATION ON BEER PUMPS.

The Council of State, Considering the investigation and report of M. le directeur of the Bureau of Health;

Considering the law of the 27th of October 1884 *on the organization and the competence of the Bureau of Public Health* (*Art.* 4 *and* 10);

Considering Art. 385, *Secs.* 2, 8, *and* 10, *of the Penal Code;*

On the proposition of the Department of Justice and Police; Decree:

ART. 1. The pressure apparatus used in retailing beer shall be submitted, during its manufacture and employment, to the control of the Bureau of Public Health.

ART. 2. The adductor and conductor pipes of the liquid must be of glass or of block tin, to the exclusion of all other alterable metallic composition. Rubber joints are tolerated; they must be frequently renewed.

ART. 3. The air reservoirs must be provided on the lower side with an opening, (man-hole, spigot), permitting an inspection and easy cleaning.

ART. 4. The air inlet of the reservoir must be established in a well-ventilated locality, and if possible, in spacious yards or on the public road.

ART. 5. All the parts of the apparatus should be maintained in a state of perfect cleanliness, their cleaning to take place as often as every eighth day.

ART. 6. The offenders against the provisions of the present regulation shall be liable to petty penalties.

CANTON OF NEUCHÂTEL.

[Translated from official copies.]

LAW ON THE SALE OF WINES AND THE CERTIFICATES OF ORIGIN. (MAY 21, 1885.)

The Grand Conseil of the Republic and Canton of Neuchâtel; on the proposition of the Council of State and the report of a Special Commission; Decree:

TITLE I.

ART. 1. It is forbidden to sell under the title of wine, all beverages which are not the product of the vine.

ART. 2. Consequently, all beverages which are not produced directly by the fermentation of the juice of fresh grapes, as wines increased by water or by alcohol, wines from dried grapes, wines of the second pressing, alcoholized piquettes, wines from residues obtained by the addition of sugared water to the vintage residues, as

well as all beverages in the manufacture of which grapes do not intervene or only intervene in part, must be sold as such and under their exact and true denomination.

The character of the beverage must always be mentioned in the invoice.

ART. 3. Those who sell or retail any beverages of this character, without designating them under their true denomination, are liable to a fine of from 20 to 200 francs, without prejudice to all damage-costs, if there is need.

ART. 4. If they are found repeating the offense or if they know the character of the beverage, they shall incur the maximum of the fine; the merchandise besides shall be confiscated and sold for the profit of the hospitals if it is known to be wholesome; if it is known to be unwholesome, its destruction must be ordered.

ART. 5. All inn-keepers and dealers in beverages shall be obliged to affix in their places and in a conspicuous position, the exact indication and the character of the beverages which they place on sale. They must besides furnish this notice to the municipal police authorities.

ART. 6. Every violator of the provisions of the present law shall incur the penalties provided in Articles 3 and 4, which precede; besides, in case of a renewal of the offense, if he is the proprietor of a public establishment, his establishment may be ordered to be closed.

TITLE II.

ART. 7. There shall be delivered, for the sale and the exportation of Neuchâtel wines, to proprietors and sellers who shall demand it, certificates intended to attest the origin of these wines.

ART. 8. These certificates, which shall certify to the exporter that the wines have been made in the Neuchâtel vineyard or in such a special part of this vineyard, and that they are pure and without any admixture, shall be delivered by the municipal authorities of the place of dispatch. The municipal authorities shall have the right of assuring themselves by all means of control, of the authenticity of the wines for which they are called on to deliver the certificates of origin.

ART. 9. The sellers and exporters may claim, besides the certificates, the application of the municipal lead stamp and seal on the vessels, barrels or cases used to transport the wines.

ART. 10. A decree of the Council of State shall determine the form of these certificates, the declarations which they must contain, their duration, as well as the fees to be collected by the municipal authorities.

ART. 11. Every person who shall be convicted of having made and signed a false declaration as to the character and origin of his wines, of having forged a certificate of origin or of having made use of a forged certificate shall be punished by the penalties set forth in Articles 122 and 126 of the Penal Code; the sentence may be published.

ART. 12. The Council of State is charged with publishing the present law in view of the exercise of the right of Referendum, and, if it become decretory, to make sure of its promulgation and execution.

Neuchâtel, the 21st of May 1885.

The aforesaid law, published in the number of the *Feuille Officielle* of May 23, 1885, not having given rise to any opposition, is promulgated to be executory from September 1st next.

NEUCHÂTEL, *the 17th of July*, 1885.

REGULATION ON THE DUTIES OF THE POLICE CONCERNING FOODS AND BEVERAGES AND THEIR FALSIFICATIONS. (AUG. 28, 1885).

The Council of State of the Republic and Canton of Neuchâtel; Considering Articles 8 *and* 13 *of the law on the sanitary police, of May* 7, 1875, *and* 9 *of said law on the attributes of the municipal authorities; On the proposition of the Department of the Interior; Decree:*

ART. 1. The sale of beverages and of articles of food is, in point of view of their healthfulness, placed under the surveillance of the police.

ART. 2. This surveillance is exercised in each municipality by the local Commission of Health and by the Municipal Council, under the control of the Department of the Interior.

ART. 3. This surveillance shall be exercised especially over bread and flours, confectionery, butchers' and pork-butchers' meat, butter and oil, fruits and vegetables, spices and colonial produce, milk, wine, beer, spirits and liqueurs, syrups and vinegars, and artificial aerated beverages.

ART. 4. The chemical or microscopical analyses judged necessary to make sure of the falsification or the unwholesomeness of beverages and commodities for food shall take place in the Cantonal Analytical Laboratory at Neuchâtel. They may also be confided to the expert chemists which the municipalities shall designate.

ART. 5. The municipal authorities, each time that they judge it to be necessary, but at least once per annum, will proceed unexpectedly to the inspection of the

shops of bakers, butchers, milk-dealers, pork-butchers, grocers, and, generally of all establishments intended for the retail sale of beverages and of articles of food, with a view of assuring themselves that these articles are neither falsified nor unwholesome. Periodic inspections at the stores of wholesale merchants will also be practiced.

The municipalities must make a report to the Department of the Interior on the result of each one of these inspections.

ART. 6. The Department of the Interior may order, on its own behalf, the inspection of the establishments mentioned in Article 5, each time it is adjudged to be necessary.

This inspection shall be made, either by the agents of the Cantonal police or by the special deputies.

ART. 7. A special inspection is ordered when the local authorities or the Department of the Interior receive a complaint or a denunciation against a dealer in beverages or articles of food.

ART. 8. The dealers in beverages or commodities for food shall be obliged to give up gratuitously to the agents or the deputies of police the samples judged necessary to permit of an examination.

ART. 9. If this examination can not take place on the spot and if it requires a chemical or microscopical analysis or any other operation of this nature, there shall be taken out two samples of the beverage or of the food to be examined, which shall be placed under seals in the presence of the dealer or of his representative; these latter may also thereto affix their seal. One of the samples is forwarded to the official chemist in order to be analyzed, and the other is kept in deposit by the authority who has ordered the technical examination.

ART. 10. When there is ground to believe that a food or a beverage is falsified or unwholesome, the local police authority shall provisionally order the sequestration of it.

ART. 11. The official chemist will transmit to the police authority with the briefest delay possible, the written report (*procès-verbal*) of his examination and his opinion on the question of determining whether the beverage or the food examined is falsified or unhealthy.

ART. 12. If the beverage or the food examined technically is not recognized as falsified or unhealthy, the expense of the technical examination remains to the charge of the municipality or of the State. The sequestration, if it has been imposed, shall be immediately revoked. If it is recognized as falsified and unhealthy, its destruction shall be ordered.

The dealer, if he has knowledge of the falsification or of the unwholesomeness, shall be punished by the penalties contained in Articles 97 and 228 of the Penal Code; if he is ignorant of them, he shall be liable to the penalties prescribed in Articles 21 of the law on the sanitary police and 261 of the Penal Code.

In either case, he is charged with the costs of the technical examination and of the criminal prosecution, and if he is the tenant of an establishment intended for the retail sale of beverages, the closing of his establishment may be imposed.

The result of the technical examination may be published by decision of the Council of State in the *Feuille officielle*.

ART. 13. Private persons who desire to have analysis made of any beverages or articles of food, may apply for this purpose to the Laboratory of the Chemist of the Academy.

A tariff, appointed by the Council of State, shall fix the fees to be collected for these analyses.

ART. 14. The present regulation replaces and abrogates that of November 25, 1879.

Neuchâtel, the 28th of August 1885.

[The tariff for fees for analysis is appended to these regulations].

CANTON OF VALAIS.

[Translated from an official copy.]

POLICE LAW OF NOVEMBER 21, 1882, CONCERNING THE SALE OF BEVERAGES AND ARTICLES OF FOOD.

The Grand Conseil of the Canton of Valais, Considering that it is important to place the public under protection from the dangers which the sale of falsified or unwholesome beverages and articles of food present; on the proposition of the Council of State, Orders:

ART. 1. The sale of beverages and of articles of food is, in point of view of healthfulness, placed under the surveillance of the police.

ART. 2. This surveillance is exercised in each commune by the Municipal Council or by a Commission to which it delegates its powers, under the control of the Department of the Interior.

ART. 3. This surveillance is exercised especially over spirituous beverages, wine and beer, as well as over bread, flours, butchers' meat, pork-butchers' meat, milk and its products, fruits, colonial produce and generally over all eatables and beverages susceptible of being altered or falsified.

ART. 4. There is constituted, for the execution of the present law, a Cantonal Commission of Experts, to the number of three, appointed by the Council of State, charged with the analysis of suspected beverages and foods.

The Professor of Chemistry of the Cantonal Lyceum is, by right, a member of this Commission.

ART. 5. The Municipal Councils or the local Commissions must, at least twice a year and unexpectedly, proceed to the inspection of all establishments carrying on the sale either at wholesale or retail of spirituous beverages, wines and beers, with the view of assuring themselves that these articles are neither falsified nor unhealthy.

They may, each time that they judge it to be necessary, proceed to the inspection of all shops or warehouses for articles of food.

The reports of these inspections are to be sent to the Department of the Interior, which will transmit them, if there is need, to the Cantonal Commission.

ART. 6. The Department of the Interior orders equally the inspection of the establishments mentioned in Article 3, each time that it deems necessary and principally when a complaint or a denunciation has been addressed to it.

This inspection is made either by the agents of the municipal police, or by the Cantonal Commission or one of its members.

ART. 7. The courts, authorities, societies and private individuals may at all times address themselves to the Cantonal Commission in order to request the verification of foods and spirituous beverages.

ART. 8. Each time that the Cantonal Commission verifies a case of falsification, it transmits to the Department of the Interior, the written report of its examination with advice.

ART. 9. When there is ground to believe that a food or a beverage is falsified or unwholesome, the local police must provisionally order its sequestration.

There are taken out, in this case, two samples of the suspected merchandise, of which one is transmitted to the Department of the Interior and the other remains deposited with the dealer. These samples are sealed in the presence of the dealer or of his representative, who may also affix his seal thereto.

ART. 10. Wholesale merchants, innkeepers and dealers are obliged to admit the experts into all localities containing any merchandise and to deliver up gratuitously the samples prescribed by the preceding Article.

ART. 11. If the beverages or the articles for food are recognized as falsified or unhealthy, the expense of the analysis is a charge to the offender.

ART. 12. The Council of State may previously take out at the Cantonal frontier and cause to be examined samples of spirits of wine, of spirituous beverages and other articles consigned to innkeepers and dealers or private individuals living in the Canton.

ART. 13. The Council of State decides upon the destruction or the withdrawal from trade of beverages and foods recognized as falsified or unwholesome.

ART. 14. The offender shall be punished by a fine of from 20 to 100 francs, to be imposed by the Council of State, without prejudice to the application of Article 153 *et seq.* of the Penal Code.

The license may, in addition, be taken away from him for a period of time to be determined by the Council of State.

The names of the falsifiers and of the dealers shall be published in the *Bulletin Officiel.*

ART. 15. The penalties provided by the preceding Article are applicable to the manufacturers and dealers who deceive the public by selling as natural any manufactured products, even when these products may not be injurious to health.

ART. 16. The Council of State is charged with the preparation of an executive regulation on the matter.

Given in Grand Conseil, at Sion, the 21st of November 1882.

The Council of State of the Canton of Valais decree: The law which precedes shall be published and posted in all the communes of the Canton, Sunday January 21st inst.

Given in Council of State, at Sion, the 13th of January 1883.

REGULATIONS OF MAY 16, 1883. CONCERNING THE SALE OF ARTICLES OF FOOD AND OF BEVERAGES.

[Translated from an official copy.]

The Council of State of the Canton of Valais, Wishing to complete the measures of police and of control concerning the sale of articles of food and of beverages; on the proposition of the Department of the Interior, Decree:

CHAPTER I.—GENERAL PROVISIONS.

ART. 1. The articles comprised in the law of November 21, 1882, and which form the object of the present regulation are those which serve as foods properly speaking or as beverages, as well as those which are employed in the preparation, production, manufacture or preservation of these foods.

ART. 2. Every material for food must be sold under its true name.

ART. 3. Every trader is responsible for the quality of his merchandise, whether he receives it from a foreign source or manufactures it himself.

ART. 4. Every trader wishing to sell an artificial product imitating a natural product (such as wine, brandy, artificial butters, etc.), must warn the public of it:

(*a*) For wines and alcoholic beverages, by a sign, placed at the entrance of the establishment and legible from without, bearing the name of the product, for example, "Artificial Wines";

(*b*) For other articles of merchandise, by a placard legible at a distance, placed above the product and bearing the name of the merchandise, accompanied by the prefix, "Artificial".

ART. 5. The sale and the use of all unwholesome or altered alimentary products are prohibited.

CHAPTER II.—SPECIAL PROVISIONS.

ART. 6. *Wines.*—(*a*) That is only recognized as natural wine which comes from the fermented juice of the grape, without any addition whatsoever.

Every wine increased by water, sugar, alcohol, a base, an acid, coloring matter, etc., etc., etc., is consequently, considered as altered and must not be designated as natural;

(*b*) The modifications brought about in wines, mentioned above, are tolerated, on condition that the materials added shall in no way be injurious to health and that they shall be indicated at the time of sale; in the contrary case, these modifications are considered as constituting an act of fraud;

(*c*) Wine manufactured from dried grapes is not considered as natural;

(*d*) Every wine which has not been made from the juice of grapes must be sold under the denomination of artificial wine;

(*e*) At the time of the sale at wholesale of a natural wine, the age and the place of production (that is to say the vineyard in which it was grown) must be indicated, in order to facilitate the control.

The sale of wine and of must exported from the Canton is submitted to the same formality.

All persons who shall import wine shall require the same formality on the part of the seller. These indications must be found on the bill of lading.

Dealers must equally be in a position to indicate to the local commissions the place of origin and the age of each butt of wine with which they are stocked.

ART. 7. *Beer.*—(*a*) Beer, recognized as such, is the fermented beverage manufactured from malt, water and hops;

(*b*) The replacement of these substances by others is considered as a *contravention* of, if the latter are inoffensive, and as an *offense* against the law in the case where they may carry injury to health;

(*c*) The establishment of beer-pumps is only authorized as long as the dealer conforms to the instructions hereafter given, and maintains them in a state of irreproachable cleanliness;

(*d*) The pumps must be established in a manner not to produce any alteration of this beverage, either by metallic substances or by fungi. In this regard the pipes must be as short as possible, and formed of pure tin. They shall be washed every day with boiling water, and every eighth day with a solution of soda. The air employed for the pressure must have traversed a bed of pounded and sifted charcoal of 20 centimeters thickness.

ART. 8. *Distilled beverages.*—(*a*) Distilled beverages, such as: Kirsch, brandy from grape-residue, from lees, from juniper berries, from gentian, etc., should only bear the name of *natural*, as long as they are produced by the fermentation and subsequent distillation of the fruit or material of which they bear the name, without any addition whatsoever;

(*b*) The sale of these beverages made artificially with alcohol or increased by alcohol and other substances, is tolerated, provided that the mixture contains nothing injurious to health.

ART. 9. *Liqueurs.*—Liqueurs, which are all artificial products, must be free from any unwholesome materials, such as toxic bitter substances, fuchsine, etc., etc.

ART. 10. *Vinegar.*—Vinegar must be composed only of acetic acid, and must contain no other acid, either mineral or organic.

ART. 11. *Milk.*—(*a*) The sale of milk coming from sick cows is prohibited;

(*b.*) Pure milk must indicate on the lactometer, at the temperature of 15° C., at least 29° and not go beyond 33°;

(c) After a rest of 24 hours, it must settle in the creamometer at least 10 per cent. of cream;

(d) On analysis it should contain at least 12 per cent. of total solids and 3 per cent. of butter-fat;

(e) Milk must not be increased by any materials intended to preserve it, such as borax, salicylic acid, etc.

ART. 12. *Butter.*—(a) Butter must not contain more than 20 per cent. of water, the average being 15 per cent.;

(b) Butter increased by a foreign fat must bear the name of artificial butter. The same denomination must be applied to a melted butter which shall not have been made with pure butter.

ART. 13. *Flours.*—(a) Wheat and rye flours must not contain more than 1.5 per cent. of mineral matters;

(b) The addition of any other flour of an inferior value constitutes a fraud, if the mixture is not mentioned;

(c) The sale of any flour containing ergotized rye is prohibited.

ART. 14. *Bread.*—(a) A well-baked bread contains on an average 25 per cent. of water, the proportion of this water must in no case exceed 30 per cent. for white bread and 35 per cent. for brown bread;

(b) The mineral matter, not including the salt, should not exceed 1 per cent. in white and brown breads and 1.5 per cent. in rye bread.

ART. 15. *Confectionery.*—Confectionery must be colored only with harmless materials, such as: Indigo, Prussian blue, ultramarine, cochineal, carmine, carmine lac, Brazil lac, orseil, saffron, Avignon berries, Persian berries, quercitron, curcuma, woad and India wood.

ART. 16. *Lard.*—Lard must not contain any water nor foreign fats.

ART. 17. *Spices and colonial produce.*—Spices and colonial produce in general must be sold in a pure and unmixed condition.

ART. 18. *Fruits.*—The sale of fruits, whose state of maturity is not that demanded on hygienic accounts, is prohibited.

ART. 19. *Tinning.*—The tinning of copper and iron utensils must be made with pure tin or with one containing not more than 1 per cent. of lead. Galvanizing with zinc is prohibited.

ART. 20. *Meat.*—(a) Conformably to Article 2 of the Decree of the Council of State of December 30, 1855, every animal, before being slaughtered in the public slaughter-houses, must be shown to the inspector of the shambles, who will make an inspection before the slaughter and a second after the cutting up. If the inspector judges the meat good and receivable, he shall deliver a permit of sale;

(b) Characteristics of sound meat:

Sound meat must be in its appearance of a bright and vermillion color. The simple touch must give a sensation of firmness, united with a light suppleness or elasticity. Any oozing of muscular juice must not be self-produced and it must cause an impression of coldness and humidity to be felt by the hand.

Meat is considered as altered, when in place of being firm, dry and resisting, it is discolored, pasty to the hand, light and spongy, or when if it is lightly compressed a viscous serosity oozes forth;

(c) The following must be considered as injurious:

1. All meat of animals dying from internal disease;
2. All meat of poisoned animals;
3. All meat of animals affected by contagious disease;
4. All meat of animals affected by a malady involving the decomposition of the blood;
5. All meat containing any parasites (cystic, trichinæ), capable of developing in the body of man;
6. All meat entering into putrefaction;

(d) The sale of all meat derived from a sick beast is prohibited, whether it may or may not be injurious to health;

(e) The sale of the meat of a calf which has not reached the age of sixteen days is also prohibited. In order to be able to establish the age of the animal, the proprietor must announce to the Communal Inspector the birth of the animal, notifying him in writing of the description of the coat and of any distinctive mark of the animal. After sixteen days only, he may present himself with his animal before the Inspector, who will verify the identity of the animal with the description given previously, and will deliver, if it is necessary, to the proprietor the certificate of age and health.

ART. 21. *Pork*—(a). The meats used in pork-butchers' shops must be submitted to the same inspection as that of ordinary butchers;

(b) Sausages must be composed only of meat and the necessary spices; they must not contain either flour or starch.

CHAPTER III.—PENAL PROVISIONS.

ART. 22. Those shall be punished by a fine of from 20 to 30 francs who sell a product under a name other than that which its nature requires, although the value of the product may be the same.

ART. 23. Those shall be punished by a fine of from 20 to 40 francs who sell as good, a food which they know to be altered or unwholesome.

ART. 24. Those shall be punished by a fine of from 40 to 80 francs who shall have rendered themselves guilty of a fraud,

ART. 25. Those shall be punished by a fine of 100 francs who shall have altered a food in a manner to render it injurious or dangerous to health.

ART. 26. The penalties provided for by the Penal Code are reserved.

CHAPTER IV.—CANTONAL COMMISSION OF CONTROL.

ART. 27. The Cantonal Commission of Control will meet at least twice a year, in February and August, in order to take cognizance of the reports of the local Commissions.

ART. 28. Besides these obligatory meetings, it will meet every time there is occasion to make a decision in matters of fraud or otherwise.

ART. 29. It will see that the local Commissions perform their duties.

ART. 30. It receives from the Department of the Interior the suspected samples and submits them to analysis.

ART. 31. For these analyses the President of the Commission keeps a register in which is mentioned:

(*a*) The sample transmitted by the Department with the serial number;
(*b*) The date of transmission;
(*c*) The request to which a reply must be given;
(*d*) The result of the analysis;
(*e*) The tax.

ART. 32. Every official or private person who desires an analysis, must forward the material to be analyzed to the Department of the Interior with a precise indication of what they require from the chemist.

ART. 33. The price of the analyses is fixed as follows:

	Francs.
Wine, beer, cider	5—20
Vinegar, liqueurs	3—15
Milk	5—10
Butter	5—20
Flour and bread	2—20
Oil	5—20
Coffee, tea	2—10
Sausages	2—20
Tinning	5

ART. 34. The Commission, a member of which performs the functions of a secretary, keeps a protocol of all its operations and decisions.

ART. 35. The emoluments of the members of the Commission for the meetings are fixed at 6 francs per sitting, and for the inspections at 10 francs per day, not including the traveling expenses.

ART. 36. The Council of State will place at the disposition of the Commission the register of all Cantonal dealers, as well as a table showing the quantities of alcohol and spirits consigned from abroad to different dealers.

CHAPTER V.—LOCAL COMMISSIONS.

ART. 37. The local Commission, composed at least of three members, is appointed by the Communal Council of each locality. The President and Secretary are taken from its midst and appointed by the same authorities.

This Commission is re-eligible every four years.

ART. 38. The members of this Commission shall be provided with a card of status, delivered by the same Council.

ART. 39. The Commission shall keep a protocol in which shall be mentioned all its operations.

ART. 40. The Commission must be deeply impressed with the idea that it is called upon to supervise all that has reference to the alimentation of man. They must in this regard control all articles of merchandise retailed as food or beverage, either on the score of health, or that of fraud.

ART. 41. The Commission is charged, according to Art. 5 of the law, with making two inspections per year, which shall take place, one in January, and the other

in July. It shall render the report thereon to the Department of the Interior within eight days after the inspection.

ART. 42. In case of doubt concerning the nature of the merchandise, it will withdraw from it the quantity designated below and will forward it to the Department of the Interior, in order to have it analyzed, indicating on it the name by which the trader sold the said merchandise.

ART. 43. If there is ground to believe that a food or a beverage may be unwholesome, the Commission shall comply with Art. 9 of the law on the subject of seals to be affixed to the sample.

ART. 44. Besides the two regular inspections, provided by the law, the Commission shall from time to time make inspections in the different establishments and shall take, even when there should not have been a complaint, a sample of the different articles of merchandise for analysis.

ART. 45. The members of the Commission shall meet once every three months, in order to communicate that which they may have learned concerning the unwholesomeness of foods and to concert concerning the measures to be taken and the inspections to be made.

ART. 46. In regard to the quantities of the different products to be taken out for analysis, it is impossible to give a rule applicable in every case; but it may be stated, generally, that for liquids, a half liter and, for solids, 200 grammes of the material suffices.

Thus decreed in Council of State, at Sion, the 16th of May 1883, in order to be published and posted in all of the communes of the Canton, Sunday July 1st, 1883.

CANTON OF VAUD.

[Translated from official copies.]

DECREE CONCERNING THE POLICE MEASURES TO BE TAKEN AGAINST THE SALE OF UNWHOLESOME OR FALSIFIED BEVERAGES AND FOODS.

The Council of State of the Canton of Vaud, Considering the advice of the Departments of Justice and Police and of the Interior;

Considering Art. 113 *and* 240 *of the law of February 1st* 1850 *on sanitary organization, provide:*

Art. 113. *The Council of State, after having heard the Council of Health, will prescribe all the police measures which are judged necessary to prevent any one from dealing in unwholesome meats, eatables and beverages.*

Art. 240. *Violations of the regulations prescribed by Art.* 113 *and* 114 *to prevent the sale of unwholesome meats, foods, eatables and beverages, are punished by a fine not to exceed* 60 *francs or by an imprisonment, if necessary, not to exceed* 15 *days, unless the case falls within Art.* 145, 146 *and* 150 *of the Penal Code.*

In case of a renewal of the offense, the maximum of the fine and of the imprisonment may be doubled.

Considering the decree of the Grand Conseil, dated May 10, 1881 *revising the aforesaid articles;*

Considering finally Art. 17, *figure* 2, *of the law of May* 18, 1876, *on the attributes and the competence of the communal authorities; Decree:*

ART. 1. The sale of beverages and of other alimentary substances is placed under the surveillance of the police.

ART. 2. This surveillance has for its object to prevent the sale of injurious beverages and foods, as well as of those articles which, excluding by their nature the idea of a manufacture, are not offered to the public in their natural state or which, in the manipulations to which they have been submitted, have been falsified by the addition of foreign substances.

ART. 3. The surveillance prescribed by the two preceding Articles is exercised, in each commune, by the Municipality, under the control of the Department of the Interior, (Bureau of Sanitary Police).

ART. 4. It is applicable especially to the following articles: Bread and flours, meat, pork, milk, coffee, chocolate, tea, sugar, fruits, wine, beer, other alcoholic beverages and aerated waters.

ART. 5. The Municipalities must make each time they judge it proper, and at least twice per annum, the inspection of bakers', butchers', dairy establishments, pork and spice warehouses, markets and public establishments intended for the retail sale of beverages, in order to assure themselves of the wholesomeness of the foods and beverages which are there retailed and of the absence of all falsifications of the character of those which are prescribed by Art. 2 above.

The result of these inspections will be reported to the Préfet of the district.

The preceding provisions do not derogate from the general and special provisions actually in force on the sale of foods and beverages.

ART. 6. The Department of the Interior may also order the inspection of the establishments mentioned in Art. 5 each time it deems it necessary.

This inspection will be performed, either by the agents of the municipal police, or by the special deputies.

Art. 7. A special inspection will be ordered when the local authorities or the Department of the Interior receives a complaint or a denunciation against a dealer in beverages or in alimentary substances.

ART. 8. The dealers in beverages or in foods are obliged to remit, gratuitously, to the official charged with police powers, the samples judged necessary to permit of examination.

ART. 9. The chemical or microscopical examination judged necessary in order to make sure of the unwholesomeness or of the falsification of the beverages and commodities for food, are undertaken at the Cantonal School of Pharmacy.

ART. 10. When there are reasons to believe that a commodity or a beverage is unwholesome or has been submitted to a falsification of the character of those mentioned in Article 2, the local police authorities must order its sequestration and cause it to be examined by an expert.

For this purpose, there is taken out two samples of the beverage or of the food to be examined, which are placed under seals in the presence of the dealer or of his representative, who may also affix his seal thereto. One of the samples is forwarded to the expert, and the other is preserved on deposit by the authority which orders the technical examination.

ART. 11. If a chemical or microscopical analysis, or any other operation of that character, is judged necessary, the sample intended for the technical examination is addressed to the School of Pharmacy, at Lausanne, in order there to be analyzed.

ART. 12. The expert mentioned in Art. 9, or the School of Pharmacy, will forward with the briefest delay possible, to the police authorities, the written report of his examination and his advice on the question of determining whether the beverage or the commodity examined is falsified or unhealthy.

ART. 13. If the beverage or commodity examined technically is not recognized as unhealthy or falsified in the sense heretofore stated, the sequestration is removed and the expense of the technical examination remains to the charge of the State.

If it is recognized as unhealthy or falsified, its destruction may be ordered by administrative method.

The dealer, if he has knowledge of its unwholesomeness or its falsification, is liable to the penalties imposed by Articles 145, 146, and 150 of the Penal Code, and if he was ignorant of them, he is punished for violation of the present decree, conformably to Article 240 of the law on sanitary organization.

In either case he is charged with the costs of the technical examination and of the criminal prosecution, and if he is the proprietor of an establishment intended for the retail sale of beverages, the license may be taken away from him by virtue of Art. 57 of the law of January 9, 1868.

The result of the technical examination is affixed to the public post of the commune and may, besides, by decision of the Council of State, be inserted in the *Feuille des avis officiels*.

ART. 14. Private individuals who desire to have any beverages or articles of food analyzed, may apply for this purpose to the Cantonal School of Pharmacy.

A tariff decreed by the Council of State will fix the fees to be collected for these analyses.

ART. 15. The present decree, which shall go into effect from the date of its promulgation, abrogates and replaces that of July 7, 1877.

Given under the seal of the Council of State, at Lausanne, the 19th of July 1881.

(The above decree is under advisement for revision.)

DECREE OF MAY 13, 1886, CONCERNING THE SALE OF ARTIFICIAL HONEY.

The Council of State of the Canton of Vaud, Considering the advice of the Department of the Interior,

Considering Article 68 *of the Law of May* 13, 1886 *on sanitary organization, Decree:*

ART. 1. It is forbidden to sell under the name of *honey* (with or without qualifying) all products other than *genuine bees honey*.

ART. 2. Every violation of the provisions of this Decree is punished conformably to Article 249 of the Law of March 13, 1886, on sanitary organization.

ART. 3. The present Decree shall be printed, published and posted, in order to be executory from and including the first of June 1886.

Given under the seal of the Council of State, at Lausanne, the 13th of May 1886.

DECREE OF MAY 2, 1887 CONCERNING BEER PUMPS.

The Council of State of the Canton of Vaud, Considering the advice of the Department of the Interior;

Considering Art. 68, 69, *and* 275 *of the law of March* 13, 1886, *on sanitary organization, Decree:*

ART. 1. Every person who wishes to establish a pressure apparatus for the retailing of beer must request the consent for it from the Municipality of the commune in which the apparatus will be established.

ART. 2. The Municipal authority will proceed to inquiry in regard to the kind of apparatus and the inconveniences which it may present on the score of public health. The result of the inquiry, to which the advice of the Municipality must be added, is addressed to the Préfet of the district, who will transmit it, with his observations, to the Department of the Interior, Service of Sanitary Police, which accords or refuses the consent.

ART. 3. Among the duties of the communal authorities will be annually to inspect the beer pumps. Such inspection may, at all times, be ordered by the Department of the Interior.

ART. 4. When the inspections allow of proving that the apparatus no longer fulfills the conditions desirable for salubrity or that it is not maintained in a state of sufficient cleanness, the consent granted is revoked by the Department of the Interior, and if there is delinquency on the part of the dealer in beer, all new consent shall be refused him.

ART. 5. All violations of the present decree will besides be punished conformably to the provisions of Art. 249 of the law of March 13, 1886 on sanitary organization.

ART. 6. The decree of May 8, 1886, concerning beer pumps is revoked.

ART. 7. The present decree shall be printed, published and posted in order to be executory from the date of its publication.

Given, under the seal of the Council of State, at Lausanne, the 2d of May 1887.

FRANCE.

[Translated from the Journal Officiel of July 14, 1889, containing the debate on the bill in the Chamber of Deputies.]

LAW TO INDICATE TO THE CONSUMER THE NATURE OF THE PRODUCT SOLD FOR CONSUMPTION UNDER THE NAME OF WINE AND TO PREVENT FRAUDS IN THE SALE OF THIS PRODUCT.

ART. 1. No one shall be able to dispatch, sell or place on sale under the name of wine a product other than that derived from the fermentation of fresh grapes.

ART. 2. The product of the fermentation of the marcs of fresh grapes with the addition of sugar and water; the mixture of this product with wine, in whatever proportions that this may be, shall only be able to be dispatched, sold or placed on sale under the name of "Vins de sucre."

ART. 3. The product of the fermentation of dried grapes with water shall only be able to be dispatched, sold or placed on sale under the name of "Vins de raisins secs;" this shall also apply to mixtures of this product, whatever may be its proportions, with wine.

ART. 4. The butts or receptacles containing any "vins de sucre" or "vins de raisins secs" must bear in large characters: Vins de sucre, Vins de raisins secs.

The books, invoices, way-bills, bills of lading must contain the like designations, according to the nature of the product delivered.

ART. 5. The transportation vouchers accompanying the shipment of wines, of "vins de sucre," of "vins de raisins secs," must be of special colors.

A ministerial order shall regulate the details of the application of this provision.

ART. 6. In case of a violation of the above Articles, the offenders shall be punished by a fine of from 25 to 500 francs and by an imprisonment of from ten days to three months.

Article 463 of the Penal Code shall be applicable.

In case of a renewal of the offense, the penalty of imprisonment shall always be imposed.

The courts may order, according to the gravity of the case, the publication in the journals and the posting, in the places which they shall indicate, of the sentence of condemnation at the cost of the condemned.

ART. 7. Every addition to wine, to "vin de sucre," to "vin de raisins secs," either at the time of fermentation, or afterwards, of the product of the fermentation or of

the distillation of figs, carob beans, mowrá flowers, bell flowers, rice, barley and any other sugar-containing materials, constitutes the falsification of food commodities prescribed by the Law of March 27, 1851.

The provisions of this law are applicable to those who falsify, detain, sell or place on sale the food commodity knowing that it is falsified.

The falsified food commodity shall be confiscated by application of Article 5 of the said law.

(This law was approved by the President August 14, 1889.)

FOREIGN LAWS AND REGULATIONS ON OLEOMARGARINE.

(Continued from page CLXXXIV, 1888 Report.)

RUSSIA.

[Translated from Revue Internationale des Falsifications, Vol. II.]

At its last session on the 16/28 of June last, 1889, preceding the Summer vacation, the Municipality of St. Petersburg published an ordinance concerning the trade in margarine, as follows:

1. The name "Margarine" designates all artificial products, whatever may be their quality, containing any fat not derived from milk.

2. It is forbidden to sell margarine under any other name.

3. The places, where margarine is sold, must be provided with signs, placed in such a manner that one can not but see them and containing the inscription in white characters on a red ground: "Sale of Margarine." Likewise the vessels, boxes or pots in which margarine is sold must bear the designation in red characters distinctly visible that they contain margarine. The same prescription applies to the papers, boxes or baskets in which the merchandise is dispatched.

4. It is absolutely forbidden to sell any margarine in the warehouses or shops where natural butter is sold.

NETHERLANDS.

[Translated from Revue Internationale des Falsifications, Vol. III.]

LAW OF JUNE 23, 1889, CONCERNING THE SUPPRESSION OF FRAUD IN THE TRADE OF BUTTER.

ART. 1. Within the meaning of this law butter is a fat, in which there are found no other substances than those derived from milk, with the exception of salt and of coloring matter. The butter substitute is a fat, not being of butter, but having the appearance of it and suited to replace it.

ART. 2. It is forbidden to sell a butter substitute, or to have it in a warehouse, shop or in any other public place whatever intended for sale, if the package or, in its absence, the product itself does not bear in distinct characters the designation of margarine. If the merchandise is not prepared with oleo-margarine, the product must be indicated as a substitute.

ART. 3. The functionaries designated by Art. 8 (No. 1 to 6) of the Penal Code, the marshalsea and all police functionaries are charged with seeking after the violations of the present law.

ART. 4. The shops or other public places intended for the trade, where are found butter or other products which may replace it, are accessible to the functionaries mentioned in the preceding Article, even if any one refuses them the entry. These functionaries must be admitted from 8 o'clock in the morning to 8 o'clock at night, Sunday excepted.

If the shop or other public place is only accessible by passing through a residence, the functionaries can not enter therein without the consent of the inhabitant. In this case an authorization in writing by the judge of the district or by the burgomaster is requisite for them; on the demand of the inhabitant, they must show him this document. If the entry is made under these circumstances, a written report must be drawn up within two days and a copy of it forwarded to those whose threshold has been crossed.

ART. 5. The functionaries mentioned in Article 3 have the power to withdraw samples of butter which any one offers for sale in the shops and other public places. They may also take samples of butter, if the purchaser has already taken possession of the merchandise outside of the shop, etc. This power does not exist, if the merchandise is not butter, but a substitute for this product and designated as such according to the provisions of Article 2.

On the demand of the proprietor of the butter, the functionary who takes a sample must refund its value.

ART. 6. The samples mentioned in the preceding Article are sealed by the functionaries; they forward them without delay, accompanied by a written statement to the competent functionary of the Public Ministry. The chemist submits them to an examination of which the remuneration is fixed in advance.

The interested party has the right to affix his proper seal on the samples taken as well as placing his signature on the paper, on which the seal of the functionary is found. This action must be mentioned in the written report.

ART. 7. Every violation of any one of the provisions contained in Article 2 of the present law, is punished with an imprisonment of two months at the most or by a fine of 200 florins at most; and in case of a renewal of the offense within the space of less than a year, the punishment may be raised to an imprisonment of four months at most or to a fine of 400 florins at most.

He shall not be punished who proves, in case of the violation of Article 2, first paragraph, that he had bought the merchandise in good faith as natural butter.

ART. 8. In case of condemnation, the judge may order the publication of the sentence, either entirely or by extracts at the expense of the condemned.

ART. 9. The actions to which the present law inflicts punishments are likewise contraventions.

I have the honor to be, very respectfully,

JOHN W. MASON,
Commissioner.

Hon. WM. WINDOM,
Secretary of the Treasury.

TABLES.

*A.

Pa

Statement showing the receipts from each specific source of internal revenue, and the amounts refunded in each collection district, State, and Territory of the United States for the fiscal year ended June 30, 1889 220–2

B.

Statements of the number and value of stamps for special taxes, manufactured tobacco, snuff, cigars, cigarettes, distilled spirits, fermented liquors, and oleomargarine issued to collectors of internal revenue; also the number and value of adhesive stamps issued from the office of the Commissioner, with the monthly receipts from the sale of adhesive stamps, for the fiscal year ended June 30, 1889 258–

C.

Comparative statement showing the percentages of receipts from the several general sources of revenue now taxable, including penalties, in each State and Territory of the United States to the aggregate receipts from the same sources, by fiscal years, from July 1, 1863, to June 30, 1889 268–

D.

Comparative statement showing the aggregate receipts of internal revenue in each collection district, State, and Territory of the United States, by fiscal years, from September 1, 1862, to June 30, 1889, with Appendix No. 1, showing differences between reported and true collections, and Appendix No. 2, showing by collection districts, States, and Territories the aggregate amount of internal revenue returned directly to the office of the Commissioner, by banks, insurance, railroad, canal, and turnpike companies, from September 1, 1862, to June 30 1867 282–

E.

Statement of the receipts from specific and general sources of revenue, by fiscal years, from September 1, 1862, to June 30, 1889 336–

F.

Table exhibiting the ratio of receipts from specific sources of internal revenue to the aggregate receipts of the same, by fiscal years, from July 1, 1863, to June 30, 1889 348–

G.

Statement of the returns of distilled spirits, fermented liquors, manufactured tobacco, snuff, cigars, and cigarettes, under the several acts of legislation, and by fiscal years, from September 1, 1862, to June 30, 1889; also statement showing the production of distilled spirits and fermented liquors in the several States and Territories, by fiscal years, from July 1, 1877, to June 30, 1889 356–

H.

Statement of the receipts from special taxes in the several States and Territories of the United States for the special-tax year ended April 30, 1889 370,

I.

Abstract of reports of district attorneys concerning suits and prosecutions under the internal-revenue laws during the fiscal year ended June 30, 1889 372–

K.

Abstract of seizures of property for violation of internal-revenue laws during the fiscal year ended June 30, 1889 3

* For receipts from Alabama, Arkansas, Colorado, Connecticut, Florida, Georgia, Kansas, Louisia Maryland, Minnesota, Montana, Nebraska, New Hampshire, New Mexico, Oregon, South Caroli and West Virginia, each of which consists of a single district, see pages 244 to 257

The District of Columbia and Delaware are now part of the collection district of Maryland; Ida and Utah, of the district of Montana; Maine and Vermont, of the district of New Hampshire; a the Territories of Alaska and Washington, of the district of Oregon. Wyoming is part of the d trict of Colorado; Rhode Island, of the district of Connecticut; Dakota, of the district of Nebrask Mississippi, of the district of Louisiana; Nevada, of the fourth district of California; and Arizona, the district of New Mexico. Hence the collections of the District of Columbia do not appear separat in Tables A, C, D, and H of the annual reports of this office since the fiscal year 1877, nor the coll tions of Arizona, Dakota, Idaho, Utah, Washington, and Wyoming since the fiscal year 1884, nor t collections of Delaware, Maine, Mississippi, Nevada, Rhode Island, and Vermont since the fiscal ye 1887, but are included in the collections of the districts of which they severally form a part.

A.—TABLE SHOWING THE RECEIPTS FROM EACH SPECIFIC SOURCE OF INTERNAL AND TERRITORY OF THE UNITED STATES FOR

	DISTRICTS.	DISTILLED SPIRITS.				
		Spirits distilled from apples, peaches, or grapes, per gallon, 90 cents.	Spirits distilled from materials other than apples, peaches, or grapes, per gallon, 90 cents.	Rectifiers of any quantity less than 500 barrels (special tax), $100.	Rectifiers of 500 barrels or more (special tax), $200.	Wine made in imitation of champagne, and liquors produced by being rectified, etc., in bottles, containing not more than 1 pint, per bottle or package, 10 cents.
	CALIFORNIA.					
1	First	$228,404.20	$200,609.10	$7,762.50	$5,000.00	
4	Fourth	78,875.97	264.60	666.66	800.00	
	Total	307,280.17	200,873.70	8,429.16	5,800.00	
	ILLINOIS.					
1	First	40,738.50	5,978,403.74	6,104.18	6,600.00	
5	Fifth		19,151,273.70	483.34	1,000.00	
8	Eighth	2,339.88	1,856,534.20	100.00		
13	Thirteenth	6,930.00	45,019.80	300.00		
	Total	50,008.33	27,031,231.44	6,987.52	7,600.00	
	INDIANA.					
6	Sixth	4,028.40	1,977,523.27	950.00		
7	Seventh	35,024.73	2,840,838.42	200.00	200.00	
	Total	39,053.13	4,818,361.69	1,150.00	200.00	
	IOWA.					
3	Third			200.00		
4	Fourth	534.60	689.40	200.00		
	Total	534.60	689.40	400.00		
	KENTUCKY.					
2	Second	46,958.61	1,238,274.97	266.67	500.00	
5	Fifth	43,521.30	7,411,556.75	2,950.00	2,600.00	
6	Sixth	1,273.50	3,149,310.70	200.00	600.00	
7	Seventh	6,084.68	1,963,502.18	100.00		
8	Eighth	13,866.71	1,084,200.44			
	Total	111,704.80	14,846,845.04	3,516.67	3,700.00	
	MICHIGAN.					
1	First			183.33	800.00	
4	Fourth			100.00		
	Total			283.33	800.00	
	MISSOURI.					
1	First	4,165.19	1,205,728.24	2,066.66	4,200.00	
6	Sixth	7,086.11	889,380.60	816.66	600.00	
	Total	11,251.30	2,095,108.84	2,883.32	4,800.00	
	NEW JERSEY.					
1	First	26,146.17		225.00		
5	Fifth	73,423.53	290,282.40	1,925.01	400.00	
	Total	99,569.70	290,282.40	2,150.01	400.00	

REVENUE AND THE AMOUNTS REFUNDED IN EACH COLLECTION DISTRICT, STATE THE FISCAL YEAR ENDED JUNE 30, 1889.

DISTILLED SPIRITS.								
Wine made in imitation of champagne, and liquors produced by being rectified, etc., in bottles containing more than 1 pint and not more than 1 quart, per bottle or package, 20 cents.	And at the same rate for any larger quantity of such merchandise, however put up or whatever may be the package.	Dealers, retail liquor (special tax), $25.	Dealers, wholesale liquor (special tax), $100.	Manufacturers of stills (special tax), $50.	Stills, or worms for distilling, manufactured, each, $20.	Stamps for distilled spirits intended for export, each, 10 cents.	Total collections on distilled spirits.	
.....	.....	$217,212.82	$35,774.99	$150.00	$440.00	$38.90	$695,392.51	1
.....	.....	97,555.27	4,000.00	.....	.....	113.50	182,276.00	4
.....	.....	314,768.09	39,774.99	150.00	440.00	152.40	877,668.51	
.....	.....	230,152.14	17,975.00	212.50	480.00	.....	6,280,666.06	1
.....	.....	19,162.00	3,166.68	.....	.....	428.80	19,175,514.52	2
.....	.....	39,290.06	3,050.01	45.85	80.00	.....	1,901,439.95	3
.....	.....	26,028.47	858.34	.....	.....	.....	79,136.61	13
.....	.....	314,632.67	25,050.03	258.35	560.00	428.80	27,436,757.14	
.....	.....	95,414.02	3,929.18	.....	.....	42.50	2,081,887.37	6
.....	.....	61,906.24	2,300.00	.....	.....	.....	2,940,469.39	7
.....	.....	157,320.26	6,229.18	.....	.....	42.50	5,022,356.76	
.....	.....	28,457.36	1,762.50	.....	.....	.....	30,419.86	3
.....	.....	40,443.77	1,208.33	.....	.....	.....	43,076.10	4
.....	.....	68,901.13	2,970.83	.....	.....	.....	73,495.96	
.....	.....	17,912.89	1,991.66	.....	.....	228.60	1,306,133.40	2
.....	.....	36,359.42	11,299.99	95.83	280.00	1,068.60	7,509,731.89	5
.....	.....	14,092.72	4,433.35	.....	.....	46.30	3,169,956.57	6
.....	.....	12,166.78	1,883.34	.....	.....	1,116.20	1,284,853.13	7
.....	.....	9,001.05	225.00	.....	.....	827.00	1,108,120.20	8
.....	.....	89,532.81	19,833.34	95.83	280.00	3,286.70	15,078,795.19	
.....	.....	113,601.28	3,708.33	.....	.....	.....	118,292.94	1
.....	.....	34,903.93	1,191.66	.....	.....	.....	36,195.59	4
.....	.....	148,505.21	4,899.99	.....	.....	.....	154,488.53	
.....	.....	86,312.35	10,920.83	62.50	180.00	14.50	1,313,650.27	1
.....	.....	63,917.56	7,141.70	.....	.....	37.90	968,980.53	6
.....	.....	150,229.91	18,062.53	62.50	180.00	52.40	2,282,630.80	
.....	.....	37,637.56	1,274.99	.....	.....	.....	65,283.72	1
.....	.....	130,763.40	6,408.33	91.67	200.00	.....	503,494.34	5
.....	.....	168,400.96	7,683.32	91.67	200.00	.....	568,778.06	

A.—Receipts from each Specific Source

	DISTRICTS.	DISTILLED SPIRITS.				
		Spirits distilled from apples, peaches, or grapes, per gallon, 20 cents.	Spirits distilled from materials other than apples, peaches, or grapes, per gallon, 60 cents.	Rectifiers of any quantity less than 500 barrels (special tax), $100.	Rectifiers of 500 barrels or more (special tax), $200.	Wine made in imitation of champagne, and liquors produced by being rectified, etc., in bottles, containing not more than 1 pint, per bottle or package, 10 cents.
	NEW YORK.					
1	First		$1,104,595.45	$875.00	$1,400.00	
2	Second	$138,901.50		9,141.67	8,150.00	
3	Third			2,366.67	2,000.00	
14	Fourteenth	50,207.99		1,758.34	400.00	
21	Twenty-first	1,942.20		1,692.30	400.00	
28	Twenty-eighth	17,801.10	544,717.80	2,066.66	2,200.00	
	Total	208,852.79	1,649,313.25	17,900.64	14,550.00	
	NORTH CAROLINA.					
4	Fourth	29,576.63	49,467.76	100.00		
5	Fifth	16,746.44	462,179.30	958.34	300.00	
	Total	46,323.07	511,647.06	1,058.34	300.00	
	OHIO.					
1	First	15,445.80	6,390,414.00	2,666.68	6,866.67	
10	Tenth	11,261.25	22,761.10	1,116.67	1,400.00	
11	Eleventh	8,100.50	382,392.00	300.00	200.00	
18	Eighteenth	1,449.73	38,409.30	312.50	1,266.67	
	Total	31,257.28	6,833,976.40	4,395.85	9,733.34	
	PENNSYLVANIA.					
1	First	8,882.71	368,868.29	8,225.03	11,000.00	
9	Ninth	21,698.10	174,474.70	1,158.34		
12	Twelfth	246.60	41,019.42	1,200.00	400.00	
23	Twenty-third	449.10	1,931,579.87	1,508.33	2,800.00	
	Total	31,282.51	2,515,942.28	12,091.70	14,200.00	
	TENNESSEE.					
2	Second	4,524.42	35,995.55	450.00	200.00	
5	Fifth	95,075.60	638,505.30	900.00	200.00	
	Total	99,600.02	674,500.85	1,350.00	400.00	
	TEXAS.					
3	Third	79.20	32.63	1,000.00	400.00	
4	Fourth	1,722.60	5,187.60	200.00		
	Total	1,801.80	5,220.23	1,200.00	400.00	
	VIRGINIA.					
2	Second	6,486.92		700.01	1,000.00	
6	Sixth	34,009.88	144,119.82	83.34	400.00	
	Total	40,496.80	144,119.82	783.35	1,400.00	
	WISCONSIN.					
1	First		468,550.46	2,258.34	3,800.00	
2	Second			200.00		
	Total		468,550.46	2,458.34	3,800.00	

OF INTERNAL REVENUE, ETC.—Continued.

DISTILLED SPIRITS.								
Wine made in imitation of champagne, and liquors produced by being rectified, etc., in bottles containing more than 1 pint and not more than 1 quart, per bottle or package, 20 cents.	And at the same rate for any larger quantity of such merchandise, however put up or whatever may be the package.	Dealers, retail liquor (special tax), $25.	Dealers, wholesale liquor (special tax), $100.	Manufacturers of stills (special tax), $50.	Stills, or worms for distilling, manufactured, each, $20.	Stamps for distilled spirits intended for export, each, 10 cents.	Total collections on distilled spirits.	
.....	.....	$148,028.13	$5,066.67	.....	.....	.....	$1,259,965.25	1
.....	.....	71,656.59	38,775.02	$12.50	$80.00	$92.00	266,809.28	2
.....	.....	154,279.96	13,400.02	91.67	.....	.....	172,138.32	3
.....	.....	201,178.99	3,758.34	.....	.....	.....	262,303.66	14
.....	.....	105,974.79	3,750.01	.....	.....	.....	113,759.30	21
.....	.....	154,518.79	3,158.33	.....	.....	.....	729,462.68	28
.....	.....	835,637.25	77,908.39	104.17	80.00	92.00	2,804,438.49	
.....	.....	23,157.33	791.67	16.67	40.00	.....	103,150.06	4
.....	.....	9,078.28	1,475.02	100.00	20.00	.....	490,857.38	5
.....	.....	32,235.61	2,266.69	116.67	60.00	.....	594,007.44	
.....	.....	94,314.63	16,499.97	116.66	560.00	23.20	6,526,907.61	1
.....	.....	68,806.47	3,687.51	.....	.....	.....	109,033.60	10
.....	.....	51,110.94	3,733.33	.....	.....	.....	440,836.77	11
.....	.....	96,844.79	7,108.34	.....	.....	.....	145,391.33	18
.....	.....	311,076.83	31,029.15	116.66	560.00	23.20	7,222,168.71	
.....	.....	94,227.66	19,600.06	4.16	20.00	.....	510,833.91	1
.....	.....	26,650.01	2,550.01	.....	.....	.....	226,531.16	9
.....	.....	72,098.71	2,820.85	.....	.....	.....	117,785.58	12
.....	.....	48,416.69	6,341.66	29.17	140.00	51.50	1,991,316.32	23
.....	.....	241,393.07	31,312.58	33.33	160.00	51.50	2,846,466.97	
.....	.....	8,946.90	500.00	.....	.....	.....	50,616.87	2
.....	.....	37,291.67	4,208.33	.....	.....	40.00	776,220.90	5
.....	.....	46,238.57	4,708.33	.....	.....	40.00	826,837.77	
.....	.....	44,400.59	3,766.67	.....	.....	.....	49,679.09	3
.....	.....	33,443.77	1,033.33	.....	.....	.....	41,587.30	4
.....	.....	77,844.36	4,800.00	.....	.....	.....	91,266.39	
.....	.....	36,075.58	3,100.01	.....	.....	.....	47,362.52	2
.....	.....	21,841.98	883.34	.....	.....	.....	201,338.36	6
.....	.....	57,917.56	3,983.35	.....	.....	.....	248,700.88	
.....	.....	101,473.96	8,079.17	16.67	60.00	.....	584,238.60	1
.....	.....	66,775.01	1,433.33	.....	.....	.....	68,408.34	2
.....	.....	168,248.97	9,512.50	16.67	60.00	.....	652,646.94	

A.—RECEIPTS FROM EACH SPECIFIC SOURCE

	DISTRICTS.	TOBACCO.					
		Cigars and cheroots of all descriptions, domestic or imported, per thousand, $3.	Cigarettes, domestic or imported, weighing not over 3 pounds per thousand, per thousand, 50 cents.	Cigarettes, domestic or imported, weighing over 3 pounds per thousand, $3.	Manufacturers of cigars (special tax), $6.	Snuff of all descriptions, domestic or imported, and snuff-flour, sold or removed for use, per pound, 8 cents.	Tobacco, chewing and smoking, fine-cut, cavendish, plug or twist, etc., twisted by hand, etc., fine-cut, shorts, and refuse scraps, clippings, cuttings, and dust, sold or removed for use, per pound, 8 cents.
	CALIFORNIA.						
1	First	$416,193.91	$1,896.91	.....	$2,355.50	$529.40	$27,78
4	Fourth	10,302.07	.....	.....	313.00	.....	13
	Total	426,495.98	1,896.91	.....	2,668.50	529.40	27,91
	ILLINOIS.						
1	First	453,954.23	133.63	.....	5,705.50	4,004.61	337,40
5	Fifth	33,078.66	.....	.....	413.50	1,793.10	86
8	Eighth	135,687.38	.....	.....	1,526.50	.....	144,65
13	Thirteenth	28,530.56	.....	.....	702.50	.....	1,07
	Total	651,250.83	133.63	.....	8,348.00	5,797.71	504,00
	INDIANA.						
6	Sixth	120,800.28	.....	.....	2,098.50	.....	4,56
7	Seventh	40,202.57	.....	.....	915.00	.....	4,63
	Total	161,002.85	.....	.....	3,013.50	.....	9,19
	IOWA.						
3	Third	26,162.19	.....	.....	513.00	.....	26,91
4	Fourth	113,612.55	.....	.....	1,364.50	59.20	4,59
	Total	139,774.74	.....	.....	1,877.50	59.20	31,50
	KENTUCKY.						
2	Second	3,844.89	.....	.....	65.50	.....	167,05
5	Fifth	60,026.85	.....	.....	624.50	.....	1,095,68
6	Sixth	20,569.20	.....	.....	518.50	.....	126,87
7	Seventh	13,771.95	.....	.....	167.00	.....	9,23
8	Eighth	706.05	.....	.....	14.50	.....	4,70
	Total	98,918.94	.....	.....	1,390.00	.....	1,403,55
	MICHIGAN.						
1	First	224,739.39	45.50	.....	2,830.00	144.78	925,27
4	Fourth	75,559.62	.....	.....	945.50	.....	1,80
	Total	300,299.01	45.50	.....	3,775.50	144.78	927,08
	MISSOURI.						
1	First	140,790.05	82.71	.....	2,989.50	3,686.30	3,525,33
6	Sixth	50,799.25	.....	.....	1,077.00	.....	94,60
	Total	191,589.30	82.71	.....	4,066.50	3,686.30	3,619,93
	NEW JERSEY.						
1	First	46,753.39	254.35	.....	1,398.00	.....	51
5	Fifth	142,277.03	3.00	.....	3,558.50	249,188.01	1,973,78
	Total	189,030.42	257.35	.....	4,956.50	249,188.01	1,974,29

AL REVENUE, ETC.—Continued.

	TOBACCO.										
in the hand, etc.), not exceeding 25,000 pounds (special tax), $6.	Retail dealers in leaf tobacco, annual sales not over $500 (special tax), $250.	Retail dealers in leaf tobacco, monthly sales in excess of rate of $500 per annum, for every $1 in excess of such rate, 30 cents.	Dealers in manufactured tobacco (special tax), $2.40.	Manufacturers of tobacco (special tax), $6.	Peddlers of tobacco, when traveling with more than two horses, mules, or other animals (special tax), $60.	Peddlers of tobacco, when traveling with two horses, mules, or other animals (special tax), $15.	Peddlers of tobacco, when traveling with one horse, mule, or other animal (special tax), $7.20.	Peddlers of tobacco, when traveling on foot or by public conveyance (special tax), $3.60.	Total collections on tobacco.	
.....	.....	.....	$30,312.80	$41.50	.....	$8.75	$67.80	$58.50	$479,528.04	1
.....	.....	.....	12,883.90	.....	.....	.....	.....	.....	23,630.97	4
.....	.....	.....	43,196.70	41.50	.....	8.75	67.80	58.50	503,159.01	
7.50	.....	.....	48,165.90	152.00	.....	123.75	307.80	39.00	870,378.06	1
.....	.....	.....	6,419.10	12.00	.....	.....	.....	.....	42,590.96	5
.....	.....	.....	20,222.00	24.00	.....	63.75	7.20	18.00	302,216.56	8
7.92	.....	.....	11,542.60	10.00	.....	.....	21.60	3.60	42,361.41	13
5.42	.....	.....	86,349.60	198.00	.....	187.50	336.60	60.60	1,257,546.99	
4.60	.....	.....	28,654.50	18.00	.....	61.88	68.40	23.10	156,489.64	6
6.67	.....	.....	16,092.80	95.50	.....	.....	31.80	6.90	62,642.59	7
1.27	.....	.....	44,747.30	113.50	.....	61.88	100.20	30.00	219,132.23	
.....	.....	.....	15,206.90	6.00	.....	36.25	.....	3.60	68,839.40	3
.....	.....	.....	22,148.97	6.00	.....	30.00	.....	7.20	141,859.78	4
.....	.....	.....	37,356.87	12.00	.....	66.25	.....	10.80	210,699.18	
7.27	.....	.....	6,951.60	181.00	.....	7.50	.....	.....	187,473.75	2
7.28	.....	.....	6,972.90	122.50	.....	30.00	.....	2.40	1,165,319.91	5
2.94	.....	.....	3,770.60	72.50	.....	.....	49.20	.....	153,860.74	6
3.75	.....	.....	5,985.20	30.50	.....	.....	.....	.....	30,285.21	7
5.82	.....	.....	3,635.70	38.00	.....	.....	.....	.....	9,282.78	8
7.06	.....	.....	26,416.00	444.50	.....	37.50	49.20	2.40	1,546,222.39	
.....	.....	.....	30,016.00	52.00	.....	281.25	108.60	15.00	1,183,680.41	1
.....	.....	.....	14,280.00	.....	.....	208.75	102.60	6.60	92,924.25	4
.....	.....	.....	44,296.00	52.00	.....	490.00	211.20	21.60	1,276,604.66	
0.41	.....	.....	23,877.35	188.00	.....	67.50	51.60	7.50	3,697,658.41	1
0.00	$62.50	.....	26,477.10	124.00	.....	56.25	40.20	8.70	173,587.86	6
0.41	62.50	.....	50,354.45	312.00	.....	123.75	91.80	16.20	3,871,246.27	
.....	.....	.....	14,102.20	.....	.....	160.00	108.20	4.80	63,296.80	1
.....	.....	.....	28,646.90	65.50	.....	507.50	171.00	11.70	2,398,307.22	5
.....	.....	.....	42,749.10	65.50	.....	667.50	279.20	16.50	2,461,606.02	

A.—Receipts from each Specific S

	DISTRICTS.	FERMENTED LIQUORS.					
		Fermented liquors, per barrel of not more than 31 gallons, $1.	Brewers, annual manufacture less than 500 barrels (special tax), $50.	Brewers, annual manufacture 500 barrels or more (special tax), $100.	Retail dealers in malt liquors (special tax), $20.	Wholesale dealers in malt liquors (special tax), $50.	Total collections on fermented liquors
	CALIFORNIA.						
1	First	$588,855.51	$1,445.84	$5,133.34	$3,281.66	$5,177.08	$603,69
4	Fourth	95,614.98	2,804.16	3,883.34	1,474.17	1,043.74	105,72
	Total	684,470.49	4,250.00	9,016.68	4,755.83	7,120.82	709,61
	ILLINOIS.						
1	First	1,555,919.10	633.33	6,925.00	6,478.35	5,862.50	1,575,81
5	Fifth	98,282.19	.....	900.00	860.92	1,781.27	101,84
8	Eighth	104,790.48	208.34	1,300.00	1,270.02	2,529.23	110,09
13	Thirteenth	101,822.56	41.67	1,291.67	4,697.51	981.25	108,83
	Total	1,860,814.33	883.34	10,416.67	13,326.80	11,154.25	1,896,59
	INDIANA.						
6	Sixth	279,164.50	200.00	2,800.00	3,268.38	4,197.93	289,13
7	Seventh	166,533.45	100.00	1,925.00	1,106.67	1,595.84	171,26
	Total	445,697.95	300.00	4,225.00	4,375.05	5,793.77	460,39
	IOWA.						
3	Third	42,977.35	150.00	700.00	1,833.36	1,570.84	47,23
4	Fourth	52,668.08	50.00	1,200.00	1,949.19	1,129.16	56,96
	Total	95,645.43	200.00	1,900.00	3,782.55	2,700.00	104,22
	KENTUCKY.						
2	Second	3,142.70	50.00	100.00	521.65	504.16	4,31
5	Fifth	185,458.80	91.67	2,266.67	814.99	258.33	188,86
6	Sixth	79,374.25	.....	416.67	550.01	295.83	80,63
7	Seventh	2,096.05	.....	100.00	401.66	575.00	3,17
8	Eighth	.....	.....	.....	56.67	241.67	29
	Total	270,071.80	141.67	2,883.34	2,344.98	1,874.99	277,31
	MICHIGAN.						
1	First	409,643.93	925.00	7,500.00	2,657.54	3,925.62	424,65
4	Fourth	70,565.66	322.91	1,500.00	928.39	1,687.51	75,00
	Total	480,209.59	1,247.91	9,000.00	3,585.93	5,612.53	499,65
	MISSOURI.						
1	First	1,423,558.50	550.00	4,658.39	1,609.98	3,030.98	1,433,44
6	Sixth	120,547.85	341.67	1,583.33	1,696.67	3,929.18	128,09
	Total	1,544,106.35	891.67	6,241.72	3,306.65	6,960.16	1,561,50
	NEW JERSEY.						
1	First	1,672.43	204.17	300.00	1,415.00	4,029.16	7,62
5	Fifth	1,260,988.15	562.51	3,458.33	4,024.20	5,825.03	1,274,25
	Total	1,262,660.58	766.68	3,758.33	5,439.20	9,854.19	1,281,87

OF INTERNAL REVENUE, ETC.—Continued.

TOBACCO.											
Dealers in leaf tobacco (special tax), $12.	Dealers in leaf tobacco purchased in the hand, etc., not exceeding 25,000 pounds (special tax), $5.	Retail dealers in leaf tobacco, annual sales not over $500 (special tax), $250.	Retail dealers in leaf tobacco, monthly sales in excess of rate of $500 per annum, for every $1 in excess of such rate, 30 cents.	Dealers in manufactured tobacco (special tax), $2.40.	Manufacturers of tobacco (special tax), $6.	Peddlers of tobacco, when traveling with more than two horses, mules, or other animals (special tax), $30.	Peddlers of tobacco, when traveling with two horses, mules, or other animals (special tax), $15.	Peddlers of tobacco, when traveling with one horse, mule, or other animal (special tax), $7.20.	Peddlers of tobacco, when traveling on foot or by public conveyance (special tax), $3.60.	Total collections on tobacco.	
$360.00	.....	.....	.....	$29,377.80	$53.50	$30.00	$180.00	$168.00	$23.40	$597,406.40	1
3,296.00	.....	.....	.....	11,645.28	234.50	.....	.....	55.20	6.00	766,097.76	2
1,736.00	.....	.....	.....	27,395.90	164.00	.....	28.75	77.40	151.50	2,402,444.84	3
214.50	$3.33	.....	.....	38,373.90	48.00	.....	510.00	382.20	42.60	385,250.93	14
502.50	17.92	.....	.....	26,354.44	52.50	.....	150.00	141.60	24.90	684,869.78	21
181.00	5.00	.....	.....	28,211.80	60.00	30.00	366.25	378.60	62.10	479,019.43	23
6,290.00	26.25	.....	.....	161,359.14	612.50	60.00	1,235.00	1,203.00	310.50	5,264,589.09	
2,694.00	54.59	.....	.....	14,876.90	390.25	.....	272.50	6.60	.....	1,028,193.25	4
630.50	63.37	.....	.....	6,504.40	676.50	74.00	708.75	21.00	3.60	836,980.38	5
2,724.50	117.96	.....	.....	21,381.30	1,056.75	74.00	981.25	27.00	3.60	1,865,173.63	
2,556.00	231.60	.....	.....	19,259.60	118.00	.....	141.25	213.60	59.40	1,624,444.36	1
123.00	3.75	.....	.....	18,305.50	24.00	.....	105.00	60.00	24.30	165,667.84	10
316.00	83.35	.....	.....	16,658.00	8.00	.....	140.00	21.00	10.80	209,890.63	11
856.00	241.46	.....	.....	27,138.80	60.00	.....	262.50	225.00	24.60	307,532.82	18
3,851.00	560.16	.....	.....	81,361.40	210.00	.....	648.75	519.60	119.10	2,307,535.65	
1,228.00	10.83	.....	.....	41,946.80	116.00	.....	63.75	586.80	100.20	1,106,671.70	1
2,188.50	267.07	.....	.....	16,705.00	47.00	.....	30.00	211.80	60.90	1,454,717.98	9
64.93	13.75	.....	.....	25,141.30	6.00	.....	163.75	164.40	25.20	162,199.19	12
156.00	.....	.....	.....	35,669.60	14.5	.....	218.75	130.20	31.50	698,463.84	23
3,632.43	291.65	.....	.....	119,462.70	183.50	.....	476.25	1,003.20	217.80	3,422,052.71	
74.00	34.60	.....	.....	7,501.60	76.50	.....	.....	.....	.....	76,125.04	2
2,869.25	577.93	.....	.....	14,644.63	215.00	.....	77.50	7.20	.....	106,168.06	5
2,943.25	602.53	.....	.....	22,146.23	291.50	.....	77.50	7.20	.....	182,293.10	
50.00	.....	.....	.....	18,507.30	6.00	.....	.....	.....	14.10	33,845.14	3
.....	.....	.....	.....	17,721.60	6.00	.....	.....	.....	.....	25,190.86	4
50.00	.....	.....	.....	36,228.90	12.00	.....	.....	.....	14.10	59,036.00	
1,825.67	129.82	.....	.....	10,495.10	331.00	.....	.....	9.00	.....	1,788,019.72	2
2,159.00	55.01	.....	.....	9,172.30	568.00	.....	26.25	13.50	.....	1,218,501.11	6
3,984.67	184.83	.....	.....	19,667.40	899.00	.....	26.25	22.50	.....	3,006,520.83	
135.00	14.99	.....	.....	19,305.14	33.00	.....	96.25	209.40	7.20	630,589.23	1
904.00	37.08	.....	.....	16,553.80	18.00	.....	97.50	9.00	.....	100,088.11	2
1,039.00	52.07	.....	.....	35,858.94	56.00	.....	193.75	218.40	7.20	730,677.34	

A.—Receipts from each Specific Source

	DISTRICTS.	FERMENTED LIQUORS.					
		Fermented liquors, per barrel of not more than 31 gallons, $1.	Brewers, annual manufacture less than 500 barrels (special tax), $50.	Brewers, annual manufacture 500 barrels or more (special tax), $100.	Retail dealers in malt liquors (special tax), $20.	Wholesale dealers in malt liquors (special tax), $50.	Total collections on fermented liquors.
	NEW YORK.						
1	First	$1,654,381.00	$700.00	$4,383.34	$4,904.15	$3,516.68	$1,667,885.17
2	Second	553,212.90	.....	1,175.00	1,568.33	1,133.33	557,089.56
3	Third	3,090,956.88	450.00	3,950.00	4,746.68	1,129.17	3,101,232.73
14	Fourteenth	997,819.48	545.83	5,575.00	9,825.60	12,200.00	1,025,965.91
21	Twenty-first	305,895.65	508.34	3,783.34	6,715.88	5,268.81	322,172.02
28	Twenty-eighth	879,495.88	529.17	5,241.66	3,838.33	5,066.68	894,171.22
	Total	7,481,761.29	2,733.34	24,108.34	31,598.97	28,314.67	7,568,516.61
	NORTH CAROLINA.						
4	Fourth	.....	.....	.....	306.66	545.83	852.49
5	Fifth	.....	.....	.....	191.69	204.16	395.85
	Total	.....	.....	.....	498.35	749.99	1,248.34
	OHIO.						
1	First	1,060,673.02	.....	4,116.68	926.67	1,941.68	1,067,658.05
10	Tenth	323,800.25	150.00	3,058.33	1,720.00	3,933.33	332,721.91
11	Eleventh	195,311.00	50.00	1,925.00	588.34	2,650.01	200,525.35
18	Eighteenth	365,234.69	366.67	3,966.67	3,823.34	2,186.66	375,578.03
	Total	1,945,079.86	566.67	13,066.68	7,058.35	10,711.68	1,976,483.34
	PENNSYLVANIA.						
1	First	1,389,383.95	1,750.00	11,591.67	3,120.00	4,066.66	1,409,912.28
9	Ninth	71,168.43	483.33	2,000.00	1,663.34	1,400.00	76,715.10
12	Twelfth	246,971.84	595.84	3,066.67	2,034.19	4,610.43	257,278.97
23	Twenty-third	482,134.63	1,395.83	5,116.67	1,100.84	2,014.58	491,762.55
	Total	2,189,658.85	4,225.00	21,775.01	8,518.37	12,091.67	2,236,268.90
	TENNESSEE.						
2	Second	11,411.28	.....	308.34	100.00	241.66	12,061.28
5	Fifth	32,654.81	.....	200.00	284.99	833.35	33,973.15
	Total	44,066.09	.....	508.34	384.99	1,075.01	46,034.43
	TEXAS.						
3	Third	42,765.70	229.17	200.00	8,605.75	5,639.57	57,440.19
4	Fourth	8,325.01	.....	100.00	3,130.00	3,145.85	14,700.86
	Total	51,090.71	229.17	300.00	11,735.75	8,785.42	72,141.05
	VIRGINIA.						
2	Second	.....	.....	.....	496.70	945.84	1,442.54
6	Sixth	43,151.25	50.00	100.00	320.00	600.00	44,221.25
	Total	43,151.25	50.00	100.00	816.70	1,545.84	45,663.79
	WISCONSIN.						
1	First	1,462,014.99	1,354.17	7,325.00	3,204.16	2,660.42	1,476,558.74
2	Second	219,238.88	962.50	5,891.67	1,656.66	1,766.67	229,516.38
	Total	1,681,253.87	2,316.67	13,216.67	4,860.82	4,427.09	1,706,075.12

OF INTERNAL REVENUE, ETC.—Continued.

OLEOMARGARINE.							
Oleomargarine, domestic, per pound, 2 cents.	Oleomargarine, imported from foreign countries, per pound, 15 cents.	Manufacturers of oleomargarine (special tax), $600.	Manufacturers of oleomargarine commencing business subsequent to the 30th day of June in any year (special tax), $300.	Retail dealers in oleomargarine (special tax), $48.	Wholesale dealers in oleomargarine (special tax), $480.	Total collections on oleomargarine.	
				$24.00		$24.00	1
							4
				24.00		24.00	
$359,175.44		$3,000.00	$500.00	31,674.00	$6,749.00	401,089.44	1
				1,176.00	1,040.00	2,216.00	5
				1,320.00		1,320.00	8
				598.00	240.00	838.00	13
359,175.44		3,000.00	500.00	34,768.00	8,029.00	405,463.44	
80,963.86		600.00		1,362.00	2,520.00	85,465.86	6
				340.00		340.00	7
80,963.86		600.00		1,702.00	2,520.00	85,805.86	
				14.00		14.00	3
				244.00		244.00	4
				258.00		258.00	
				44.00		44.00	2
				1,208.00	1,040.00	2,248.00	5
				1,972.00	480.00	2,452.00	6
				292.00		292.00	7
							8
				3,516.00	1,520.00	5,036.00	
				10,438.00	7,620.00	18,058.00	1
				2,334.00	2,920.00	5,254.00	4
				12,772.00	10,540.00	23,312.00	
				3,518.00	1,600.00	5,118.00	1
				4,844.00	2,234.00	7,078.00	6
				8,362.00	3,834.00	12,196.00	
				472.00	520.00	992.00	1
				2,164.00	2,880.00	5,044.00	5
				2,636.00	3,400.00	6,036.00	

A.—Receipts from each Specific Source

	DISTRICTS.	FERMENTED LIQUORS.					
		Fermented liquors, per barrel of not more than 31 gallons, $1.	Brewers, annual manufacture less than 500 barrels (special tax), $50.	Brewers, annual manufacture 500 barrels or more (special tax), $100.	Retail dealers in malt liquors (special tax), $20.	Wholesale dealers in malt liquors (special tax), $50.	Total collections on fermented liquors.
	NEW YORK.						
1	First	$1,654,381.00	$700.00	$4,383.34	$4,904.15	$3,516.68	$1,667,885.17
2	Second	553,212.90	.....	1,175.00	1,568.33	1,133.33	557,089.56
3	Third	3,090,956.88	450.00	3,950.00	4,740.68	1,129.17	3,101,232.73
14	Fourteenth	997,819.48	545.83	5,575.00	9,325.60	12,200.00	1,025,965.91
21	Twenty-first	305,895.65	508.34	3,783.34	6,715.88	5,268.81	322,172.02
28	Twenty-eighth	879,495.38	529.17	5,241.66	3,838.33	5,066.68	894,171.22
	Total	7,481,761.29	2,733.34	24,108.34	31,596.97	28,314.67	7,568,516.61
	NORTH CAROLINA.						
4	Fourth	.....	.....	.....	306.66	545.83	852.49
5	Fifth	.....	.....	.....	191.69	204.16	395.85
	Total	.....	.....	.....	498.35	749.99	1,248.34
	OHIO.						
1	First	1,060,673.02	.....	4,116.68	926.67	1,941.68	1,067,658.05
10	Tenth	323,860.25	150.00	3,058.33	1,720.00	3,933.33	332,721.91
11	Eleventh	195,311.00	50.00	1,925.00	588.34	2,650.01	200,525.25
18	Eighteenth	365,234.69	366.67	3,966.67	3,823.34	2,186.66	375,578.03
	Total	1,945,079.86	566.67	13,066.68	7,058.35	10,711.68	1,976,483.24
	PENNSYLVANIA.						
1	First	1,389,383.95	1,750.00	11,591.67	3,120.00	4,066.66	1,409,912.28
9	Ninth	71,168.43	483.33	2,000.00	1,663.34	1,400.00	76,715.10
12	Twelfth	246,971.84	595.84	3,066.67	2,034.19	4,610.43	257,878.97
23	Twenty-third	482,134.63	1,395.83	5,116.67	1,100.84	2,014.58	491,762.55
	Total	2,189,658.85	4,225.00	21,775.01	8,518.37	12,091.67	2,236,268.90
	TENNESSEE.						
2	Second	11,411.28	.....	308.34	100.00	241.66	12,061.28
5	Fifth	32,654.81	.....	200.00	284.99	833.35	33,973.15
	Total	44,066.09	.....	508.34	384.99	1,075.01	46,034.43
	TEXAS.						
3	Third	42,765.70	229.17	200.00	8,605.75	5,639.57	57,440.19
4	Fourth	8,325.01	.....	100.00	3,130.00	3,145.85	14,700.86
	Total	51,090.71	229.17	300.00	11,735.75	8,785.42	72,141.05
	VIRGINIA.						
2	Second	.....	.....	.....	496.70	945.84	1,442.54
6	Sixth	43,151.25	50.00	100.00	320.00	600.00	44,221.25
	Total	43,151.25	50.00	100.00	816.70	1,545.84	45,663.79
	WISCONSIN.						
1	First	1,462,014.99	1,354.17	7,325.00	3,204.16	2,660.42	1,476,558.74
2	Second	219,238.88	962.50	5,891.67	1,656.06	1,766.67	229,516.38
	Total	1,681,253.87	2,316.67	13,216.67	4,860.82	4,427.09	1,706,075.12

OF INTERNAL REVENUE, ETC.—Continued.

OLEOMARGARINE.							
Oleomargarine, domestic, per pound, 2 cents.	Oleomargarine, imported from foreign countries, per pound, 15 cents.	Manufacturers of oleomargarine (special tax), $600.	Manufacturers of oleomargarine commencing business subsequent to the 30th day of June in any year (special tax), $500.	Retail dealers in oleomargarine (special tax), $48.	Wholesale dealers in oleomargarine (special tax), $480.	Total collections on oleomargarine.	
				$96.00	$200.00	$296.00	1
							2
				372.00		372.00	3
							14
							21
							28
				468.00	200.00	668.00	
				16.00		16.00	4
				4.00		4.00	5
				20.00		20.00	
				5,196.00	2,920.00	8,116.00	1
				500.00	160.00	660.00	10
$4,085.10		$600.00		1,100.00	160.00	5,945.10	11
35,895.54		600.00		4,884.00	1,960.00	43,339.54	18
39,980.64		1,200.00		11,680.00	5,200.00	58,060.64	
6,217.38		1,800.00		840.00	120.00	8,977.38	1
							9
				50.00		50.00	12
				2,902.00	860.00	3,762.00	29
6,217.38		1,800.00		3,792.00	980.00	12,789.38	
				148.00		148.00	2
				1,188.00	1,120.00	2,308.00	5
				1,336.00	1,120.00	2,456.00	
				568.00	1,400.00	1,968.00	3
				1,084.00	1,000.00	2,084.00	4
				1,652.00	2,400.00	4,052.00	
				252.00	540.00	792.00	2
							6
				252.00	540.00	792.00	
				1,824.00	920.00	2,744.00	1
				1,130.00	1,240.00	2,370.00	2
				2,954.00	2,160.00	5,114.00	

A.—RECEIPTS FROM EACH SPECIFIC SOURCE

	DISTRICTS.	BANKS AND BANKERS.				Total collections not otherwise herein provided for.
		Circulation issued by any bank, etc., or person, per month, ¼ of 1 per cent.	Bank circulation exceeding 50 per cent. of capital, in addition, per month, ¼ of 1 per cent.	Banks, bankers, and other parties liable on amount of notes of any person, State bank, or State banking association, or of any town, city, or municipal corporation, paid out by them, 10 per cent.	Total collections on banks and bankers.	
	CALIFORNIA.					
1	First					
4	Fourth					$1,076.47
	Total					1,076.47
	ILLINOIS.					
1	First					
5	Fifth					.01
8	Eighth					2.72
13	Thirteenth					
	Total					2.73
	INDIANA.					
6	Sixth					
7	Seventh					
	Total					
	IOWA.					
3	Third					
4	Fourth					
	Total					
	KENTUCKY.					
2	Second					102.30
5	Fifth					.52
6	Sixth					
7	Seventh					
8	Eighth					5.94
	Total					108.76
	MICHIGAN.					
1	First			$1,829.75	$1,829.75	3.71
4	Fourth			284.70	284.70	
	Total			2,114.45	2,114.45	3.71
	MISSOURI.					
1	First					
6	Sixth					.02
	Total					.02
	NEW JERSEY.					
1	First					1.91
5	Fifth					
	Total					1.91

OF INTERNAL REVENUE, ETC.—Continued.

PENALTIES, ETC.							
Unassessed penalties.	Penalties upon unstamped instruments.	United States' share of penalties recovered by suits.	Penalties received on compromises.	Interest.	Costs.	Total of penalties, etc., collected.	
$238.39		$104.70	$4,320.10			$4,811.29	1
206.76		54.32	460.00			660.08	4
592.25		159.02	4,720.10			5,471.37	
17.96		1,760.80	4,225.00	$32.72	$597.64	6,634.12	1
9.66		40.00		8.58	41.75	99.39	5
2.34		3,126.50		.46		3,129.30	8
2.33		488.50			700.46	1,191.29	13
31.69		5,415.80	4,225.00	41.76	1,339.85	11,054.10	
11.28		263.80	50.00	30.85	140.67	496.60	6
2.62	$5.00	10.00	25.00	.50	10.00	53.12	7
13.90	5.00	273.80	75.00	31.35	150.67	549.72	
5.35		1,359.00	385.17	1.56	826.66	2,577.74	3
1,318.04						1,318.04	4
1,323.39		1,359.00	385.17	1.56	826.66	3,895.78	
107.46				53.28	39.65	200.39	2
635.74				29.34	26.15	691.23	5
			10.00			10.00	6
71.10				2.15	325.56	398.81	7
1,153.91		323.90	44.10	50.20	463.10	2,035.21	8
1,968.21		323.90	54.10	134.97	854.46	3,335.64	
70.05		2,685.62	140.00	44.86	2,584.32	5,524.85	1
		562.50	75.00	7.43	48.50	693.43	4
70.05		3,248.12	215.00	52.29	2,632.82	6,218.28	
1.60			125.00	17.41		143.41	1
.52			100.00	4.07	2,780.56	2,885.15	6
1.52			225.00	21.48	2,780.56	3,028.56	
4.97	5.00		110.00	.08	96.77	216.82	1
14.32			927.00	.84	158.63	1,100.79	5
19.29	5.00		1,037.00	.92	255.40	1,317.61	

A.—RECEIPTS FROM EACH S

	DISTRICTS.	BANKS AND BANKERS.				Total collections not otherwise herein provided for.
		Circulation issued by any bank, etc., of person, per month, ½ of 1 per cent.	Bank circulation exceeding 90 per cent. of capital, in addition, per month, ½ of 1 per cent.	Banks, bankers, and other parties liable on amount of notes of any person, State bank, or State banking association, or of any town, city, or municipal corporation, paid out by them, 10 per cent.	Total collections on banks and bankers.	
	NEW YORK.					
1	First					$3.
2	Second					
3	Third					
14	Fourteenth					
21	Twenty-first					
28	Twenty-eighth			$1,611.20	$1,611.20	41.40
	Total			1,611.20	1,611.20	45.03
	NORTH CAROLINA.					
4	Fourth					
5	Fifth					
	Total					
	OHIO.					
1	First					107.15
10	Tenth					
11	Eleventh					
18	Eighteenth					
	Total					107.15
	PENNSYLVANIA.					
1	First					8.00
9	Ninth					
12	Twelfth					18.
23	Twenty-third					
	Total					26.
	TENNESSEE.					
2	Second					
5	Fifth					2,04
	Total					2,04
	TEXAS.					
3	Third					
4	Fourth					
	Total					
	VIRGINIA.					
2	Second					
6	Sixth					
	Total					
	WISCONSIN.					
1	First					
2	Second					
	Total					

OF INTERNAL REVENUE, ETC.—Continued.

PENALTIES, ETC.							
Unassessed penalties.	Penalties upon unstamped instruments.	United States' share of penalties recovered by suits.	Penalties received on compromises.	Interest.	Costs.	Total of penalties, etc., collected.	
$326.29	.....	$104.70	$4,220.10	.....	.....	$4,811.29	1
266.76	.....	54.32	460.00	.....	.....	600.08	4
592.25	.....	159.02	4,720.10	.....	.....	5,471.37	
17.96	.....	1,760.80	4,225.00	$32.72	$597.64	6,634.12	1
2.06	.....	40.06	.....	8.58	41.75	99.39	5
2.24	.....	2,126.50	.....	.46	.....	3,129.30	8
2.33	.....	488.50	.....	.....	700.46	1,191.29	13
31.69	.....	5,415.80	4,225.00	41.76	1,339.85	11,054.10	
11.28	.....	263.80	50.00	30.85	140.67	496.60	6
2.62	$5.00	10.00	25.00	.50	10.00	53.12	7
13.90	5.00	273.80	75.00	31.35	150.67	549.72	
5.35	.....	1,359.00	385.17	1.56	826.66	2,577.74	3
1,318.04	.....	.....	.....	.....	.....	1,318.04	4
1,323.39	.....	1,359.00	385.17	1.56	826.66	3,895.78	
107.46	.....	.....	.....	53.28	39.65	200.39	2
635.74	.....	.....	.....	20.34	26.15	691.23	5
.....	.....	.....	10.00	.....	.....	10.00	6
71.10	.....	.....	.....	2.15	325.56	398.81	7
1,153.91	.....	323.90	44.10	50.20	463.10	2,035.21	8
1,968.21	.....	323.90	54.10	134.97	854.46	3,335.64	
70.05	.....	2,695.62	140.00	44.86	2,584.32	5,524.85	1
.....	.....	562.50	75.00	7.43	48.50	693.43	4
70.05	.....	3,248.12	215.00	52.29	2,632.82	6,218.28	
1.00	.....	.....	125.00	17.41	.....	143.41	1
.52	.....	.....	100.00	4.07	2,780.56	2,885.15	6
1.52	.....	.....	225.00	21.48	2,780.56	3,028.56	
4.97	5.00	.....	110.00	.08	96.77	216.82	1
14.32	.....	.....	927.00	.84	158.63	1,100.79	5
19.29	5.00	.....	1,037.00	.92	255.40	1,317.61	

A.—Recapitulation of Receipts from each General Source of Internal Revenue and the Amounts Refunded in each Collection District.

DISTRICTS.	DISTILLED SPIRITS.			TOBACCO.		
	Total.	Refunded.	Net total.	Total.	Refunded.	Net total.
CALIFORNIA.						
First	$695,392.51	$1,119.97	$694,272.54	$479,528.04	$53.94	$479,474.10
Fourth	182,276.00	346.80	181,929.20	23,630.97		23,630.97
Total	877,668.51	1,466.77	876,201.74	503,159.01	53.94	503,105.07
ILLINOIS.						
First	6,280,666.06		6,280,666.06	870,378.06	46.66	870,331.40
Fifth	19,175,514.52		19,175,514.52	42,590.96		42,590.96
Eighth	1,901,439.95	26.02	1,901,413.93	302,216.56		302,216.56
Thirteenth	79,136.61		79,136.61	42,361.41		42,361.41
Total	27,436,757.14	26.02	27,436,731.12	1,257,546.99	46.66	1,257,500.33
INDIANA.						
Sixth	2,081,887.37	141.30	2,081,746.07	156,489.64		156,489.64
Seventh	2,940,469.39		2,940,469.39	62,642.59		62,642.59
Total	5,022,356.76	141.30	5,022,215.46	219,132.23		219,132.23
IOWA.						
Third	30,419.86		30,419.86	68,839.40		68,839.40
Fourth	43,076.10		43,076.10	141,859.78		141,859.78
Total	73,495.96		73,495.96	210,699.18		210,699.18
KENTUCKY.						
Second	1,306,133.40	221.44	1,305,911.96	187,473.75		187,473.75
Fifth	7,509,731.89	1,011.95	7,508,719.94	1,165,319.91		1,165,319.91
Sixth	3,169,956.57		3,169,956.57	153,860.74		153,860.74
Seventh	1,984,853.13	189.00	1,984,664.13	30,285.21		30,285.21
Eighth	1,108,120.20	824.81	1,107,295.39	9,282.78		9,282.78
Total	15,078,795.19	2,247.20	15,076,547.99	1,546,222.39		1,546,222.39
MICHIGAN.						
First	118,292.94		118,292.94	1,183,680.41		1,183,680.41
Fourth	36,195.59		36,195.59	92,924.25		92,924.25
Total	154,488.53		154,488.53	1,276,604.66		1,276,604.66
MISSOURI.						
First	1,313,650.27		1,313,650.27	3,697,658.41		3,697,658.41
Sixth	968,980.53	124.52	968,856.01	173,587.86	a296.69	173,301.17
Total	2,282,630.80	124.52	2,282,506.28	3,871,246.27	296.69	3,870,959.58
NEW JERSEY.						
First	65,283.72		65,283.72	63,298.80		63,298.80
Fifth	503,494.34		503,494.34	2,398,307.22		2,398,307.22
Total	568,778.06		568,778.06	2,461,606.02		2,461,606.02
NEW YORK.						
First	1,259,965.25		1,259,965.25	597,406.40		597,406.40
Second	266,809.28		266,809.28	766,097.76	b248.15	765,849.61
Third	172,138.32		172,138.32	2,402,444.84		2,402,444.84
Fourteenth	262,803.06	414.00	261,389.06	385,250.93		385,250.93
Twenty-first	113,759.30	4.50	113,754.80	634,369.73		634,369.73
Twenty-eighth	729,462.68		729,462.68	479,019.43		479,019.43
Total	2,804,438.49	418.50	2,804,019.99	5,264,589.09	248.15	5,264,340.94

a Income. b Interest on bonds.

OF INTERNAL REVENUE, ETC.—Continued.

PENALTIES, ETC.							
Unassessed penalties.	Penalties upon unstamped instruments.	United States' share of penalties recovered by suits.	Penalties received on compromises.	Interest.	Costs.	Total of penalties, etc., collected.	
$115.95			$20.00	$0.70		$136.65	1
6.07			265.00		$28.80	299.87	2
32.55			1,159.10	.73		1,192.38	3
88.87		$214.58	5,545.10	3.42	10.20	5,862.29	14
24.33	$5.00	531.30	41.00	17.22		621.85	21
532.92		125.00	35.63			693.55	28
800.69	5.00	873.88	7,065.89	22.07	39.06	8,806.59	
99.41		99.00	41.00	119.38	1,660.90	2,019.69	4
283.86			789.60	1.56	3,606.15	4,681.17	5
383.27		99.00	830.60	120.94	5,267.05	6,700.86	
115.26			85.00			200.26	1
20.99		300.00	400.00	13.74	716.93	1,451.66	10
373.19				2.42		375.61	11
		25.00	247.30		72.29	344.59	18
509.44		325.00	732.30	16.16	789.22	2,372.12	
22.22	21.00		1,065.00	1.97	409.06	1,539.25	1
9.57			35.00	.35	67.13	112.05	9
38.01			49.50	19.99	97.18	204.68	12
8.26	41.00		1,050.00	10.09	227.16	1,336.51	23
78.06	62.00		2,219.50	32.40	800.53	3,192.49	
1,028.61						1,028.61	2
5,637.45						5,637.45	5
6,666.06						6,666.06	
99.82				7.66	354.99	462.47	3
691.09			439.32			1,130.41	4
790.91			439.32	7.66	354.99	1,592.88	
5.34			13.00	1.13		19.47	2
273.67		1,048.79	608.05			1,929.51	6
278.91		1,048.79	621.05	1.13		1,948.98	
9.88		100.00	500.00	2.01	557.98	1,169.82	1
.48			400.00		412.25	812.68	2
10.26		100.00	900.00	2.01	970.23	1,982.50	

A.—Recapitulation of Receipts from each General Source of Internal Revenue, etc.—Continued.

DISTRICTS.	FERMENTED LIQUORS.			OLEOMARGARINE.		
	Total.	Refunded.	Net total.	Total.	Refunded.	Net total.
CALIFORNIA.						
First	$603,893.43		$603,893.43	$24.00		$24.00
Fourth	105,720.39		105,720.39			
Total	709,613.82		709,613.82	24.00		24.00
ILLINOIS.						
First	1,575,818.28		1,575,818.28	401,089.44		401,089.44
Fifth	101,844.38		101,844.38	2,216.00		2,216.00
Eighth	110,098.07		110,098.07	1,320.00		1,320.00
Thirteenth	108,834.66		108,834.66	838.00		838.00
Total	1,896,595.39		1,896,595.39	405,463.44		405,463.44
INDIANA.						
Sixth	289,130.81		289,130.81	85,465.86		85,465.86
Seventh	171,260.96		171,260.96	340.00		340.00
Total	460,391.77		460,391.77	85,805.86		85,805.86
IOWA.						
Third	47,231.55		47,231.55	14.00		14.00
Fourth	56,996.43		56,996.43	244.00		244.00
Total	104,227.98		104,227.98	258.00		258.00
KENTUCKY.						
Second	4,318.51		4,318.51	44.00		44.00
Fifth	188,890.46		188,890.46	2,248.00		2,248.00
Sixth	80,636.76		80,636.76	2,452.00		2,452.00
Seventh	3,172.71		3,172.71	292.00		292.00
Eighth	298.34		298.34			
Total	277,316.78		277,316.78	5,036.00		5,036.00
MICHIGAN.						
First	424,651.49		424,651.49	18,058.00		18,058.00
Fourth	75,004.47		75,004.47	5,254.00		5,254.00
Total	499,655.96		499,655.96	23,312.00		23,312.00
MISSOURI.						
First	1,433,407.85		1,433,407.85	5,118.00		5,118.00
Sixth	128,098.70		128,098.70	7,078.00		7,078.00
Total	1,561,506.55		1,561,506.55	12,196.00		12,196.00
NEW JERSEY.						
First	7,620.76		7,620.76	992.00		992.00
Fifth	1,274,258.22		1,274,258.22	5,044.00		5,044.00
Total	1,281,878.98		1,281,878.98	6,036.00		6,036.00
NEW YORK.						
First	1,667,885.17		1,667,885.17	296.00		296.00
Second	557,089.56		557,089.56			
Third	3,101,232.73		3,101,232.73	372.00		372.00
Fourteenth	1,025,965.91		1,025,965.91			
Twenty-first	322,172.02		322,172.02			
Twenty-eighth	894,171.22		894,171.22			
Total	7,568,516.61		7,568,516.61	668.00		668.00

A.—Recapitulation of Receipts from each General Source of Internal Revenue, etc.—Continued.

DISTRICTS.	DISTILLED SPIRITS.			TOBACCO.		
	Total.	Refunded.	Net total.	Total.	Refunded.	Net total.
NORTH CAROLINA.						
Fourth	$103,150.06	.....	$103,150.06	$1,028,193.25	$34.78	$1,028,168.47
Fifth	490,857.38	$127.80	490,729.58	836,980.38	.....	836,980.38
Total	594,007.44	127.80	593,879.64	1,865,173.63	24.78	1,865,148.85
OHIO.						
First	6,526,907.61	.....	6,526,907.61	1,624,444.36	.....	1,624,444.36
Tenth	109,033.00	.....	109,033.00	165,667.84	27.84	165,640.00
Eleventh	440,836.77	.....	440,836.77	209,890.63	.....	209,890.63
Eighteenth	145,391.33	.....	145,391.33	307,532.82	72.00	307,460.82
Total	7,222,168.71	.....	7,222,168.71	2,307,535.65	99.84	2,307,435.81
PENNSYLVANIA.						
First	510,833.91	a76.85	510,757.06	1,106,671.70	411.35	1,106,260.35
Ninth	226,531.16	103.35	226,427.81	1,454,717.98	.....	1,454,717.98
Twelfth	117,785.58	.....	117,785.58	162,199.19	.....	162,199.19
Twenty-third	1,991,316.32	551.70	1,990,764.62	698,463.84	b3,413.68	695,050.16
Total	2,846,466.97	731.90	2,845,735.07	3,422,052.71	3,825.03	3,418,227.68
TENNESSEE.						
Second	50,616.87	....	50,616.87	76,125.04	14.14	76,110.90
Fifth	776,220.90	98.31	776,122.59	106,168.06	24.00	106,144.06
Total	826,837.77	98.31	826,739.46	182,293.10	38.14	182,254.96
TEXAS.						
Third	49,679.09	.....	49,679.09	33,845.14	.....	33,845.14
Fourth	41,587.80	29.70	41,557.69	25,190.86	.....	25,190.86
Total	91,266.89	29.70	91,236.69	59,036.00	.....	59,036.00
VIRGINIA.						
Second	47,362.52	.....	47,362.52	1,788,019.72	12.00	1,788,007.72
Sixth	201,338.36	307.24	201,031.12	1,218,501.11	.....	1,218,501.11
Total	248,700.88	307.24	248,393.64	3,006,520.83	12.00	3,006,508.83
WISCONSIN.						
First	584,238.60	.....	584,238.60	630,589.23	.....	630,589.23
Second	68,408.34	.....	68,408.34	100,088.11	.....	100,088.11
Total	652,646.94	.....	652,646.94	730,677.34	.....	730,677.34

a Court costs. b Interest on bonds.

A.—Recapitulation of Receipts from each General Source of Internal Revenue, etc.—Continued.

DISTRICTS.	BANKS AND BANKERS.			COLLECTIONS NOT OTHERWISE HEREIN PROVIDED FOR.		
	Total.	Refunded.	Net total.	Total.	Refunded.	Net total.
CALIFORNIA.						
First						
Fourth				$1,076.47	a$487.55	$588.92
Total				1,076.47	487.55	588.92
ILLINOIS.						
First						
Fifth				.01		.01
Eighth				2.72		2.72
Thirteenth						
Total				2.73		2.73
INDIANA.						
Sixth						
Seventh						
Total						
IOWA.						
Third						
Fourth						
Total						
KENTUCKY.						
Second				102.30		102.30
Fifth				.52		.52
Sixth						
Seventh						
Eighth				5.94		5.94
Total				108.76		108.76
MICHIGAN.						
First	$1,829.75	$34.80	$1,794.95	3.71		3.71
Fourth	284.70		284.70			
Total	2,114.45	34.80	2,079.65	3.71		3.71
MISSOURI.						
First						
Sixth				.02	a.02	
Total				.02	.02	
NEW JERSEY.						
First				1.91		1.91
Fifth						
Total				1.91		1.91
NEW YORK.						
First				3.63		3.63
Second						
Third						
Fourteenth						
Twenty-first						
Twenty-eighth	1,611.20		1,611.20	41.40		41.40
Total	1,611.20		1,611.20	45.03		45.03

a Income.

A.—Recapitulation of Receipts from each General Source of Internal Revenue, etc.—Continued.

Districts.	Fermented liquors.			Oleomargarine.		
	Total.	Refunded.	Net total.	Total.	Refunded.	Net total.
North Carolina.						
Fourth	$852.49		$852.49	$16.00		$16.00
Fifth	396.85		396.85	4.00		4.00
Total	1,248.34		1,248.34	20.00		20.00
Ohio.						
First	1,067,658.05		1,067,658.05	8,116.00		8,116.00
Tenth	332,721.91		332,721.91	660.00		660.00
Eleventh	200,525.25		200,525.25	5,945.10		5,945.10
Eighteenth	375,578.03		375,578.03	43,339.54		43,339.54
Total	1,976,483.24		1,976,483.24	58,060.64		58,060.64
Pennsylvania.						
First	1,469,912.28		1,469,912.28	8,977.38		8,977.38
Ninth	76,715.10		76,715.10			
Twelfth	257,878.97		257,878.97	50.00		50.00
Twenty-third	491,762.55		491,762.55	3,762.00		3,762.00
Total	2,236,268.90		2,236,268.90	12,789.38		12,789.38
Tennessee.						
Second	12,061.28		12,061.28	148.00		148.00
Fifth	33,973.15		33,973.15	2,308.00		2,308.00
Total	46,034.43		46,034.43	2,456.00		2,456.00
Texas.						
Third	57,440.19		57,440.19	1,968.00		1,968.00
Fourth	14,700.86		14,700.86	2,084.00		2,084.00
Total	72,141.05		72,141.05	4,052.00		4,052.00
Virginia.						
Second	1,442.54		1,442.54	792.00		792.00
Sixth	44,221.25		44,221.25			
Total	45,663.79		45,663.79	792.00		792.00
Wisconsin.						
First	1,476,558.74		1,476,558.74	2,744.00		2,744.00
Second	229,516.38		229,516.38	2,370.00		2,370.00
Total	1,706,075.12		1,706,075.12	5,114.00		5,114.00

A.—Recapitulation of Receipts from each General Source of Internal Revenue, etc.—Continued.

DISTRICTS.	PENALTIES, ETC.			AGGREGATE RECEIPTS.		
	Total.	Refunded.	Net total.	Total.	Refunded.	Net total.
CALIFORNIA.						
First	$4,811.29	$61.48	$4,749.81	$1,783,649.27	$1,235.39	$1,782,413.88
Fourth	660.08	13.70	646.38	313,363.91	848.05	312,515.86
Total	5,471.37	75.18	5,396.19	2,097,013.18	2,083.44	2,094,929.74
ILLINOIS.						
First	6,634.12	18.98	6,615.14	9,134,585.96	65.64	9,134,520.32
Fifth	99.39	.....	99.39	19,322,265.26	.....	19,322,265.26
Eighth	3,129.30	19.41	3,109.89	2,318,206.60	45.43	2,318,161.17
Thirteenth	1,191.29	.....	1,191.29	232,361.97	.....	232,361.97
Total	11,054.10	38.39	11,015.71	31,007,419.79	111.07	31,007,308.72
INDIANA.						
Sixth	496.60	.....	496.60	2,613,470.28	141.30	2,613,328.98
Seventh	53.12	.....	53.12	3,174,766.06	.....	3,174,766.06
Total	549.72	.....	549.72	5,788,236.34	141.30	5,788,095.04
IOWA.						
Third	2,577.74	8.50	2,569.24	148,082.55	8.50	149,074.05
Fourth	1,318.04	.....	1,318.04	243,494.35	.....	243,494.35
Total	3,895.78	8.50	3,887.28	392,576.90	8.50	392,568.40
KENTUCKY.						
Second	200.39	6.00	194.39	1,498,272.35	227.44	1,498,044.91
Fifth	691.23	.....	691.23	8,866,882.01	1,011.95	8,865,870.06
Sixth	10.00	.....	10.00	3,406,916.07	.....	3,406,916.07
Seventh	398.81	.....	398.81	2,019,001.86	189.00	2,018,812.86
Eighth	2,035.21	.....	2,035.21	1,119,742.47	824.81	1,118,917.66
Total	3,335.64	6.00	3,329.64	16,910,814.76	2,253.20	16,908,561.56
MICHIGAN.						
First	5,524.85	56.25	5,468.60	1,752,041.15	91.05	1,751,950.10
Fourth	693.43	.....	693.43	210,356.44	.....	210,356.44
Total	6,218.28	56.25	6,162.03	1,962,397.59	91.05	1,962,306.54
MISSOURI.						
First	143.41	4.57	138.84	6,449,977.94	4.57	6,449,973.37
Sixth	2,885.15	40.00	2,845.15	1,280,630.26	451.23	1,280,179.03
Total	3,028.56	44.57	2,983.99	7,730,608.20	455.80	7,730,152.40
NEW JERSEY.						
First	216.82	.....	216.82	137,414.01	.....	137,414.01
Fifth	1,100.79	.....	1,100.79	4,182,204.57	.....	4,182,204.57
Total	1,317.61	.....	1,317.61	4,319,618.58	.....	4,319,618.58
NEW YORK.						
First	136.65	.....	136.65	3,525,693.10	.....	3,525,693.10
Second	299.87	.....	299.87	1,590,296.47	248.15	1,590,048.32
Third	1,192.38	.....	1,192.38	5,677,380.27	.....	5,677,380.27
Fourteenth	5,862.29	.....	5,862.29	1,679,382.79	414.00	1,678,968.79
Twenty-first	621.85	85.39	536.46	1,070,923.90	89.89	1,070,833.01
Twenty-eighth	693.55	.....	693.55	2,104,999.48	.....	2,104,999.48
Total	8,806.59	85.39	8,721.20	15,648,675.01	752.04	15,647,922.97

A.—RECAPITULATION OF RECEIPTS FROM EACH GENERAL SOURCE OF INTERNAL REVENUE, ETC.—Continued.

DISTRICTS.	BANKS AND BANKERS.			COLLECTIONS NOT OTHERWISE HEREIN PROVIDED FOR.		
	Total.	Refunded.	Net total.	Total.	Refunded.	Net total.
NORTH CAROLINA.						
Fourth						
Fifth						
Total						
OHIO.						
First				$107.15		$107.15
Tenth						
Eleventh						
Eighteenth						
Total				107.15		107.15
PENNSYLVANIA.						
First				8.00	a8.00	
Ninth						
Twelfth				18.11		18.11
Twenty-third						
Total				26.11	8.00	18.11
TENNESSEE.						
Second				.01		.01
Fifth				2,048.40		2,048.40
Total				2,048.41		2,048.41
TEXAS.						
Third				29.20		29.20
Fourth						
Total				29.20		29.20
VIRGINIA.						
Second						
Sixth						
Total						
WISCONSIN.						
First				.02		.02
Second						
Total				.02		.02

a Court costs.

A.—Recapitulation of Receipts from each General Source of Internal Revenue, etc.—Continued.

DISTRICTS.	PENALTIES, ETC.			AGGREGATE RECEIPTS.		
	Total.	Refunded.	Net total.	Total.	Refunded.	Net total.
CALIFORNIA.						
First	$4,811.29	$61.48	$4,749.81	$1,783,649.27	$1,235.39	$1,782,413.88
Fourth	660.08	13.70	646.38	313,363.91	848.05	312,515.86
Total	5,471.37	75.18	5,396.19	2,097,013.18	2,083.44	2,094,929.74
ILLINOIS.						
First	6,634.12	18.98	6,615.14	9,134,585.96	65.64	9,134,520.32
Fifth	99.39	.....	99.39	19,322,265.26	.....	19,322,265.26
Eighth	3,129.30	19.41	3,109.89	2,318,206.60	45.43	2,318,161.17
Thirteenth	1,191.29	.....	1,191.29	282,361.97	.....	282,361.97
Total	11,054.10	38.39	11,015.71	31,007,419.79	111.07	31,007,308.72
INDIANA.						
Sixth	496.60	.....	496.60	2,613,470.28	141.30	2,613,328.98
Seventh	53.12	.....	53.12	3,174,766.06	.....	3,174,766.06
Total	549.72	.....	549.72	5,788,236.34	141.30	5,788,095.04
IOWA.						
Third	2,577.74	8.50	2,569.24	148,082.55	8.50	148,074.05
Fourth	1,318.04	.....	1,318.04	243,494.35	.....	243,494.35
Total	3,895.78	8.50	3,887.28	392,576.90	8.50	392,568.40
KENTUCKY.						
Second	200.39	6.00	194.39	1,498,272.35	227.44	1,498,044.91
Fifth	691.23	.....	691.23	8,866,882.01	1,011.95	8,865,870.06
Sixth	10.00	.....	10.00	3,406,916.07	.....	3,406,916.07
Seventh	398.81	.....	398.81	2,019,001.86	189.00	2,018,812.86
Eighth	2,035.21	.....	2,035.21	1,119,742.47	824.81	1,118,917.66
Total	3,335.64	6.00	3,329.64	16,910,814.76	2,253.20	16,908,561.56
MICHIGAN.						
First	5,524.85	56.25	5,468.60	1,752,041.15	91.05	1,751,950.10
Fourth	693.43	.....	693.43	210,356.44	.....	210,356.44
Total	6,218.28	56.25	6,162.03	1,962,397.59	91.05	1,962,306.54
MISSOURI.						
First	143.41	4.57	138.84	6,449,977.94	4.57	6,449,973.37
Sixth	2,885.15	40.00	2,845.15	1,280,630.26	451.23	1,280,179.03
Total	3,028.56	44.57	2,983.99	7,730,608.20	455.80	7,730,152.40
NEW JERSEY.						
First	216.82	.....	216.82	137,414.01	.....	137,414.01
Fifth	1,100.79	.....	1,100.79	4,182,204.57	.....	4,182,204.57
Total	1,317.61	.....	1,317.61	4,319,618.58	.....	4,319,618.58
NEW YORK.						
First	136.65	.....	136.65	3,525,693.10	.....	3,525,693.10
Second	299.87	.....	299.87	1,590,296.47	248.15	1,590,048.32
Third	1,192.38	.....	1,192.38	5,677,380.27	.....	5,677,380.27
Fourteenth	5,862.29	.....	5,862.29	1,679,382.79	414.00	1,678,968.79
Twenty-first	621.85	85.39	536.46	1,070,922.90	89.89	1,070,833.01
Twenty-eighth	693.55	.....	693.55	2,104,999.48	.....	2,104,999.48
Total	8,806.89	85.39	8,721.20	15,648,675.01	752.04	15,647,922.97

A.—RECAPITULATION OF RECEIPTS FROM EACH GENERAL SOURCE OF INTERNAL REVENUE, ETC.—Continued.

DISTRICTS.	PENALTIES, ETC.			AGGREGATE RECEIPTS.		
	Total.	Refunded.	Net total.	Total.	Refunded.	Net total.
NORTH CAROLINA.						
Fourth	$2,019.69	$9.55	$2,010.14	$1,134,231.49	$34.33	$1,134,197.16
Fifth	4,681.17		4,681.17	1,332,918.78	127.80	1,332,790.98
Total	6,700.86	9.55	6,691.31	2,467,150.27	162.13	2,466,988.14
OHIO.						
First	200.26	29.17	171.09	9,227,433.43	29.17	9,227,404.26
Tenth	1,451.66	18.75	1,432.91	609,534.41	46.59	609,487.82
Eleventh	375.61		375.61	857,573.36		857,573.36
Eighteenth	344.59		344.59	872,186.31	72.00	872,114.31
Total	2,372.12	47.92	2,324.20	11,566,727.51	147.76	11,566,579.75
PENNSYLVANIA.						
First	1,589.25	24.78	1,514.47	3,037,942.52	520.98	3,037,421.54
Ninth	112.05		112.05	1,758,076.29	103.35	1,757,972.94
Twelfth	204.68		204.68	538,136.53		538,136.53
Twenty-third	1,386.51		1,386.51	3,186,641.22	3,965.38	3,182,675.84
Total	3,192.49	24.78	3,167.71	8,520,796.56	4,589.71	8,516,206.85
TENNESSEE.						
Second	1,028.61	85.00	943.61	139,979.81	99.14	139,880.67
Fifth	5,637.45	37.70	5,599.75	926,355.96	160.01	926,195.95
Total	6,666.06	122.70	6,543.36	1,066,335.77	259.15	1,066,076.62
TEXAS.						
Third	462.47		462.47	143,424.09		143,424.09
Fourth	1,130.41		1,130.41	84,693.43	29.70	84,663.73
Total	1,592.88		1,592.88	228,117.52	29.70	228,087.82
VIRGINIA.						
Second	19.47		19.47	1,837,636.25	12.00	1,837,624.25
Sixth	1,929.51		1,929.51	1,465,990.23	307.24	1,465,682.99
Total	1,948.98		1,948.98	3,303,626.48	319.24	3,303,307.24
WISCONSIN.						
First	1,169.82		1,169.82	2,695,300.41		2,695,300.41
Second	812.68		812.68	401,195.51		401,195.51
Total	1,982.50		1,982.50	3,096,495.92		3,096,495.92

A.—RECEIPTS FROM EACH SPECIFIC SOURCE OF

	STATES AND TERRITORIES.	DISTILLED SPIRITS.			
		Spirits distilled from apples, peaches, or grapes, per gallon, 20 cents.	Spirits distilled from materials other than apples, peaches, or grapes, per gallon, 20 cents.	Rectifiers of any quantity less than 500 barrels (special tax), $100.	Rectifiers of 500 barrels or more (special tax), $200.
1	Alabama	$6,676.22	$1,076.40	$100.00	$200.00
2	Arkansas	8,020.80	50,058.22		
3	California	307,280.17	200,873.70	8,420.16	5,800.00
4	Colorado			700.00	
5	Connecticut	21,286.73	60,342.80	2,137.50	400.00
6	Florida				
7	Georgia	5,960.92	316,022.35	758.34	
8	Illinois	50,006.33	27,631,231.44	6,987.52	7,600.00
9	Indiana	39,053.13	4,818,361.60	1,150.00	200.00
10	Iowa	534.60	689.40	400.00	
11	Kansas	1,200.60		50.00	
12	Kentucky	111,704.80	14,846,845.04	3,516.67	3,700.00
13	Louisiana	1,371.51		1,841.66	1,400.00
14	Maryland	28,987.71	1,759,420.09	4,516.68	5,600.00
15	Massachusetts		956,681.21	4,161.67	3,800.00
16	Michigan			283.33	200.00
17	Minnesota		847,879.20	1,491.66	600.00
18	Missouri	11,251.30	2,095,108.84	2,883.32	4,800.00
19	Montana			650.00	
20	Nebraska		1,868,148.66	250.00	200.00
21	New Hampshire	90.90	20,861.10	33.34	
22	New Jersey	99,509.70	290,282.40	2,150.01	400.00
23	New Mexico	2,462.40		233.33	
24	New York	206,852.79	1,649,313.25	17,900.64	14,550.00
25	North Carolina	46,323.07	511,647.06	1,058.34	200.00
26	Ohio	31,267.28	6,839,976.40	4,396.85	9,733.34
27	Oregon	1,248.30	7,050.60	758.32	200.00
28	Pennsylvania	31,282.51	2,515,942.28	12,691.70	14,200.00
29	South Carolina	595.63	27,433.98	83.33	
30	Tennessee	99,600.02	674,500.85	1,350.00	400.00
31	Texas	1,801.80	5,220.23	1,200.00	400.00
32	Virginia	40,496.80	144,119.82	783.35	1,400.00
33	West Virginia	8,435.99	287,166.95	658.36	800.00
34	Wisconsin		468,550.46	2,458.34	3,200.00
	Total	1,165,371.91	68,281,803.93	85,582.43	81,033.34
	Collections for fiscal year ended June 30, 1888	799,296.19	63,609,641.18	93,616.68	74,700.02

INTERNAL REVENUE BY STATES AND TERRITORIES.

DISTILLED SPIRITS.						
Wine made in imitation of champagne, and liquors produced by being rectified, etc., in bottles containing not more than 1 pint, per bottle or package, 10 cents.	Wine made in imitation of champagne, and liquors produced by being rectified, etc., in bottles containing more than 1 pint and not more than 1 quart, per bottle or package, 20 cents.	And at the same rate for any larger quantity of such merchandise, however put up or whatever may be the package.	Dealers, retail liquor (special tax), $25.	Dealers, wholesale liquor (special tax), $100.	Manufacturers of stills (special tax), $50.	
			$22,117.27	$3,016.67		1
			20,517.18	2,258.34		2
			314,763.09	30,774.99	$150.00	3
			66,781.33	6,208.34		4
			112,518.36	8,225.03	16.67	5
			8,544.25	991.67		6
			42,914.34	4,766.66	37.50	7
			314,632.67	25,050.03	258.35	8
			157,329.26	6,229.18		9
			68,901.13	2,970.83		10
			30,433.73	350.00		11
			39,592.81	10,813.34	95.83	12
			140,817.04	14,001.66		13
			169,863.19	14,750.00	29.17	14
			96,821.33	18,116.66	87.51	15
			149,505.21	4,899.99		16
			71,158.34	5,454.18		17
			150,229.91	18,062.53	62.50	18
			58,992.80	5,691.67		19
			79,531.21	5,366.69		20
			57,773.42	908.33		21
			168,400.96	7,683.32	91.67	22
			36,260.48	3,049.99		23
			835,637.25	77,908.39	104.17	24
			32,235.61	2,266.69	116.67	25
			311,076.83	31,029.15	116.66	26
			58,399.92	5,479.19		27
			241,393.07	31,312.58	33.33	28
			21,466.43	1,433.33		29
			46,238.57	4,708.33		30
			77,844.36	4,800.00		31
			57,917.56	3,983.35		32
			18,992.25	791.67		33
			168,248.97	9,512.50	16.67	34
			4,296,780.04	391,975.28	1,216.70	
			4,331,048.99	392,129.06	1,142.77	

A.—RECEIPTS FROM EACH SPECIFIC SOURCE

	STATES AND TERRITORIES.	DISTILLED SPIRITS.			TOBACCO.
		Stills, or worms for distilling, manufactured, each, $20.	Stamps for distilled spirits intended for export, each, 10 cents.	Total collections on distilled spirits.	Cigars and cheroots of all descriptions, domestic or imported, per thousand, $3.
1	Alabama			$33,186.56	$12,694.04
2	Arkansas			81,854.05	8,081.28
3	California	$440.00	$152.40	877,668.51	426,495.96
4	Colorado			73,689.67	36,814.45
5	Connecticut	60.00		213,986.59	126,667.92
6	Florida			9,555.92	401,841.51
7	Georgia	220.00		370,702.11	6,716.85
8	Illinois	560.00	428.90	27,436,757.14	651,259.83
9	Indiana		42.50	5,022,356.76	161,062.85
10	Iowa			78,495.96	139,774.74
11	Kansas			32,124.33	51,645.96
12	Kentucky	280.00	3,286.70	15,078,795.19	96,918.94
13	Louisiana			159,521.87	122,769.64
14	Maryland	40.00	417.70	1,983,524.45	281,280.92
15	Massachusetts	260.00	478.00	1,074,406.38	395,499.33
16	Michigan			154,488.53	300,299.01
17	Minnesota		121.50	926,704.88	110,226.31
18	Missouri	180.00	52.40	2,282,630.80	191,598.30
19	Montana			65,334.47	8,012.03
20	Nebraska			1,973,496.56	63,328.58
21	New Hampshire			79,667.09	32,460.33
22	New Jersey	200.00		568,778.06	189,030.42
23	New Mexico			42,106.20	900.60
24	New York	80.00	92.00	2,804,438.49	3,427,719.84
25	North Carolina	60.00		594,067.44	8,697.50
26	Ohio	560.00	23.20	7,222,168.71	891,152.21
27	Oregon			73,136.34	21,094.95
28	Pennsylvania	160.00	51.50	2,846,466.97	2,949,094.81
29	South Carolina			51,006.10	2,444.80
30	Tennessee		40.00	826,837.77	17,971.75
31	Texas			91,266.39	29,926.85
32	Virginia			248,700.88	150,377.74
33	West Virginia		66.00	286,711.22	150,935.52
34	Wisconsin	60.60		652,646.94	225,459.00
	Total	3,160.00	5,252.70	74,312,206.33	11,662,156.92
	Collections for fiscal year ended June 30, 1888	2,410.00	2,188.50	69,306,168.41	11,534,179.95

OF INTERNAL REVENUE, ETC.—Continued.

TOBACCO.						
Cigarettes, domestic or imported, weighing not over 3 pounds per thousand, per thousand, 50 cents.	Cigarettes, domestic or imported, weighing over 3 pounds per thousand, per thousand, $6.	Manufacturers of cigars (special tax), $24.	Snuff of all descriptions, domestic or imported, and snuff flour, sold or removed for use, per pound, 8 cents.	Tobacco, chewing and smoking, fine-cut, cavendish, plug or twist, etc., twisted by hand, etc., fine-cut shorts, and refuse scraps, clippings, cuttings, and sweepings of tobacco, domestic or imported, per pound, 8 cents.	Dealers in leaf tobacco (special tax), $12.	
		$297.28		$728.37		1
		148.00		5,007.31		2
$1,896.91		2,668.50	$529.40	27,915.97	$279.00	3
1.00		765.50		1,094.54	31.00	4
		2,467.25	10.28	1,274.61	688.00	5
457.98		1,599.00		856.63	195.00	6
8.50		156.00		8,731.80		7
133.63		8,348.00	5,797.71	504,004.10	325.00	8
		3,013.50		9,198.56	713.17	9
		1,877.50	59.20	31,505.82	36.00	10
		1,250.00		4,512.23	10.00	11
		1,390.00		1,403,551.38	13,315.41	12
29,164.58		747.50	2,573.80	135,263.94	284.00	13
61,811.15		4,707.00	240,801.29	753,676.33	1,055.00	14
686.65		3,458.00	3,895.35	6,939.97	455.50	15
45.50		3,775.50	144.78	927,084.07	185.00	16
		1,496.00	64.08	7,557.23	69.00	17
82.71		4,066.50	3,686.30	3,619,937.35	853.00	18
		183.00		141.12		19
		1,341.00		2,542.38	24.00	20
1.25		735.00		458.96	28.00	21
257.35		4,956.50	249,188.01	1,974,297.94	106.00	22
		28.00		116.56		23
438,932.81	$87.60	30,404.25	19,152.38	1,186,195.82	6,290.00	24
269,105.00		180.50	2,800.00	1,557,024.27	2,724.50	25
4,171.50		8,970.50	1,536.53	1,314,434.90	3,851.00	26
.50		420.00		1,757.89	167.00	27
1,278.67		24,808.00	83,606.72	237,852.98	3,632.43	28
3.50		75.00		1,387.56		29
		237.00	6,333.66	131,682.38	2,943.25	30
44.89		389.25		1,390.01	50.00	31
267,659.05		1,011.00	32,619.38	2,521,069.01	3,984.67	32
		618.50		233,858.61	155.00	33
		3,697.00	236.74	463,859.24	1,039.00	34
1,075,743.08	87.60	120,195.53	645,089.57	17,076,899.94	43,968.98	
931,363.95		116,398.09	594,959.13	16,154,049.05	40,384.04	

A.—RECEIPTS FROM EACH SPECIFIC SOURCE

	STATES AND TERRITORIES.	TOBACCO.			
		Dealers in leaf tobacco (purchased in the hard, etc.), not exceeding 25,000 pounds (special tax), $6.	Retail dealers in leaf tobacco, annual sales not over $500 (special tax), $24.	Retail dealers in leaf tobacco, monthly sales in excess of rate of $500 per annum, for every $1 in excess of such rate, 50 cents.	Dealers in manufactured tobacco (special tax), $2.40.
1	Alabama	$1.67			$22,106.91
2	Arkansas		$104.17		18,822.45
3	California				43,194.70
4	Colorado				15,212.80
5	Connecticut	61.25			28,689.89
6	Florida	8.75	104.17		7,455.24
7	Georgia				28,809.24
8	Illinois	55.42			98,249.60
9	Indiana	151.27			44,747.20
10	Iowa				27,256.87
11	Kansas				23,822.45
12	Kentucky	2,097.06			28,416.09
13	Louisiana				34,644.59
14	Maryland	112.49			29,126.80
15	Massachusetts	10.00			29,963.49
16	Michigan				44,296.00
17	Minnesota				23,698.90
18	Missouri	70.41	62.50		50,354.45
19	Montana	2.92			10,481.19
20	Nebraska				20,128.21
21	New Hampshire				27,329.99
22	New Jersey				42,749.19
23	New Mexico				5,758.40
24	New York	26.25			161,359.14
25	North Carolina	117.96			21,281.30
26	Ohio	560.16			81,361.40
27	Oregon	5.00			15,897.70
28	Pennsylvania	291.65			119,462.70
29	South Carolina	1.25			15,823.10
30	Tennessee	602.53			22,146.23
31	Texas				34,228.90
32	Virginia	184.83			19,697.40
33	West Virginia	189.01			12,285.89
34	Wisconsin	52.07			35,858.94
	Total	4,601.95	270.84		1,289,615.93
	Collections for fiscal year ended June 30, 1888	4,343.04	218.75		1,268,294.89

OF INTERNAL REVENUE, ETC.—Continued.

TOBACCO.						
Manufacturers of tobacco (special tax), $6.	Peddlers of tobacco, when traveling with more than two horses, mules, or other animals (special tax), $20.	Peddlers of tobacco, when traveling with two horses, mules, or other animals (special tax), $10.	Peddlers of tobacco, when traveling with one horse, mule, or other animal (special tax), $7.20.	Peddlers of tobacco, when traveling on foot or by public conveyance (special tax), $3.60.	Total collections on tobacco.	
$11.50					$35,839.77	1
31.50				$4.80	22,199.51	2
41.50		$3.75	$67.80	58.50	503,159.01	3
					53,919.29	4
		31.25	59.70	14.70	157,225.85	5
					412,518.35	6
42.00		59.99	7.20		44,517.59	7
198.00		187.50	226.00	60.00	1,257,546.99	8
113.50		61.25	108.20	30.00	219,182.23	9
12.00		66.25		10.80	210,699.18	10
6.00		52.50	20.00	4.20	91,023.47	11
444.50		37.50	49.20	2.40	1,546,222.30	12
235.50		155.00	115.80	54.90	325,394.16	13
66.50			140.40	3.60	1,382,761.44	14
24.00		493.75	220.20	63.90	361,710.04	15
52.00		490.00	211.20	21.60	1,276,604.66	16
51.00		41.25	99.00	3.30	143,306.07	17
312.00		123.75	91.80	16.20	3,871,246.27	18
2.00				7.20	18,829.37	19
	$7.50	55.00		15.30	97,439.97	20
		182.50	153.00	24.30	61,373.24	21
65.50		667.50	271.20	16.50	2,461,606.02	22
10.00		7.50	1.80		6,818.86	23
612.50	60.00	1,235.00	1,203.00	319.50	5,264,589.09	24
1,056.75	74.00	981.25	27.00	3.60	1,865,173.63	25
210.00		648.75	519.60	119.10	2,307,535.65	26
				6.90	29,349.94	27
183.50		476.25	1,008.20	217.80	3,422,052.71	28
22.00		23.75			19,786.96	29
291.50		77.50	7.20		182,293.10	30
12.00				14.10	59,036.00	31
899.00		26.25	22.50		3,006,529.53	32
59.00					398,051.44	33
56.00		193.75	218.40	7.20	730,677.34	34
5,128.25	141.50	6,439.38	5,039.00	1,092.00	31,866,860.42	
5,125.00	196.00	6,880.53	5,106.30	1,022.70	30,662,431.52	

A.—RECEIPTS FROM EACH SPECIFIC SOURCE

	STATES AND TERRITORIES.	FERMENTED LIQUORS.					
		Fermented liquors, per barrel of not more than 31 gallons, $1.	Brewers, annual manufacture less than 500 barrels (special tax), $50.	Brewers, annual manufacture 500 barrels or more (special tax), $100.	Retail dealers in malt liquors (special tax), $20.	Wholesale dealers in malt liquors (special tax), $50.	Total collections on fermented liquors.
1	Alabama	$18,303.38	$54.17	$375.00	$900.00	$925.00	$20,557.55
2	Arkansas	.....	.....	.....	281.67	1,320.84	1,602.51
3	California	684,470.49	4,250.00	9,016.68	4,755.83	7,120.82	709,613.82
4	Colorado	155,541.99	475.01	1,808.33	1,764.17	3,081.25	162,670.75
5	Connecticut	245,789.65	150.00	2,033.34	2,950.04	6,691.68	257,614.71
6	Florida	.....	.....	.....	275.92	312.50	588.42
7	Georgia	14,069.26	50.00	341.67	1,178.32	1,614.58	17,253.83
8	Illinois	1,860,814.33	883.34	19,416.67	13,326.80	11,154.25	1,896,595.39
9	Indiana	445,697.95	300.00	4,225.00	4,375.05	5,793.77	460,391.77
10	Iowa	95,645.43	200.00	1,900.00	3,782.55	2,700.00	104,227.98
11	Kansas	7,668.25	50.00	100.00	2,088.83	1,225.82	11,132.90
12	Kentucky	270,071.80	141.67	2,883.34	2,344.98	1,874.99	277,316.78
13	Louisiana	134,168.97	.....	1,091.67	3,281.66	1,872.92	140,415.22
14	Maryland	609,066.89	1,012.50	3,591.67	2,593.33	2,704.16	618,968.55
15	Massachusetts	927,904.99	100.00	3,108.34	4,346.65	8,404.18	943,864.16
16	Michigan	480,209.59	1,247.91	9,000.00	3,585.93	5,612.53	499,655.96
17	Minnesota	290,517.87	1,329.17	8,491.67	2,188.32	4,704.17	307,231.20
18	Missouri	1,544,106.35	891.67	6,241.72	3,306.65	6,960.16	1,561,506.55
19	Montana	66,278.47	1,854.16	1,866.67	1,260.00	2,866.67	74,125.97
20	Nebraska	161,550.07	797.92	2,800.00	1,951.67	7,328.74	174,428.40
21	New Hampshire	313,523.22	.....	633.34	5,421.69	2,991.68	322,569.93
22	New Jersey	1,262,060.58	766.68	3,758.33	5,439.20	9,854.19	1,281,878.98
23	New Mexico	5,794.44	612.50	525.00	590.01	2,368.74	9,890.69
24	New York	7,481,761.29	2,733.34	24,108.34	31,598.97	28,314.67	7,568,516.61
25	North Carolina	.....	.....	.....	498.35	749.99	1,248.34
26	Ohio	1,945,079.86	566.67	13,066.68	7,058.35	10,711.68	1,976,483.24
27	Oregon	102,594.46	2,672.92	2,566.67	1,215.83	1,045.83	110,695.71
28	Pennsylvania	2,189,658.85	4,225.00	21,775.01	8,518.37	12,091.67	2,236,268.90
29	South Carolina	9,265.27	.....	133.33	195.01	420.82	10,014.43
30	Tennessee	44,066.09	.....	508.34	884.99	1,075.01	46,034.43
31	Texas	51,090.71	229.17	300.00	11,735.75	8,785.42	72,141.05
32	Virginia	43,151.25	50.00	100.00	816.70	1,545.84	45,663.79
33	West Virginia	94,688.32	50.00	600.00	919.97	333.33	96,591.62
34	Wisconsin	1,681,253.87	2,316.67	13,216.67	4,860.82	4,427.09	1,706,075.12
	Total	23,235,863.94	28,010.47	150,583.48	139,792.38	169,584.99	23,723,835.26
	Collections for fiscal year ended June 30, 1888	22,829,202.90	30,085.43	145,079.23	148,295.99	171,554.93	23,324,218.48

OF INTERNAL REVENUE, ETC.—Continued.

OLEOMARGARINE.							
Oleomargarine, domestic, per pound, 2 cents.	Oleomargarine, imported from foreign countries, per pound, 15 cents.	Manufacturers of oleomargarine (special tax), $600.	Manufacturers of oleomargarine commencing business subsequent to the 30th day of June in any year (special tax), $500.	Retail dealers in oleomargarine (special tax), $48.	Wholesale dealers in oleomargarine (special tax), $480.	Total collections on oleomargarine.	
				$1,710.00	$360.00	$2,590.00	1
				722.00	3,920.00	4,642.00	2
				24.00		24.00	3
$2,020.32		$600.00		116.00	200.00	3,836.32	4
130,200.70		2,400.00	$500.00	16,044.00	4,480.00	153,624.70	5
				590.00	640.00	1,230.00	6
				104.00		104.00	7
359,175.44		3,000.00	500.00	34,768.00	8,020.00	405,463.44	8
80,963.86		600.00		1,702.00	2,520.00	85,805.86	9
				258.00		258.00	10
46,555.60		1,200.00		1,200.00		48,955.60	11
				3,516.00	1,520.00	5,036.00	12
				2,100.00	1,040.00	3,140.00	13
933.80				402.00		1,335.80	14
10,334.06		600.00		17,984.00	11,620.00	40,538.06	15
				12,772.00	10,540.00	23,312.00	16
							17
				8,382.00	3,834.00	12,100.00	18
				552.00	3,860.00	4,852.00	19
				837.51	2,240.00	3,077.51	20
				1,384.00		1,384.00	21
				2,636.00	3,400.00	6,036.00	22
				124.00		124.00	23
				468.00	200.00	668.00	24
				20.00		20.00	25
39,980.64		1,200.00		11,080.00	5,200.00	58,060.64	26
				220.00	2,660.00	2,880.00	27
6,217.38		1,800.00		3,792.00	980.00	12,789.38	28
				8.00		8.00	29
				1,896.00	1,120.00	2,456.00	30
				1,652.00	2,400.00	4,052.00	31
				252.00	540.00	792.00	32
				276.00		276.00	33
				2,954.00	2,160.00	5,114.00	34
677,302.40		11,400.00	1,000.00	130,631.51	73,914.00	894,247.91	
653,356.10		13,150.00	4,000.00	122,258.54	70,376.24	864,139.88	

A.—RECEIPTS FROM EACH SPECIFIC SOURCE

	STATES AND TERRITORIES.	BANKS AND BANKERS.				Total collections not otherwise herein provided for.
		Circulation issued by any bank, etc., or person, per month, ¼ of 1 per cent.	Bank circulation exceeding 90 per cent. of capital, in addition, per month, ¼ of 1 per cent.	Banks, bankers, and other parties liable on amount of notes of any person, State bank, or State banking association, or of any town, city, or municipal corporation, paid out by them, 10 per cent.	Total collections on banks and bankers.	
1	Alabama					
2	Arkansas					
3	California					$1,676.47
4	Colorado					
5	Connecticut					
6	Florida					
7	Georgia					
8	Illinois					2.73
9	Indiana					
10	Iowa					
11	Kansas					
12	Kentucky					108.76
13	Louisiana					11.60
14	Maryland					2.67
15	Massachusetts			$236.80	$236.80	2,696.44
16	Michigan			2,114.45	2,114.45	3.71
17	Minnesota					
18	Missouri					.02
19	Montana					1.60
20	Nebraska					
21	New Hampshire			2,251.46	2,251.46	
22	New Jersey					1.91
23	New Mexico					3.00
24	New York			1,611.20	1,611.20	45.03
25	North Carolina					
26	Ohio					107.15
27	Oregon					
28	Pennsylvania					28.11
29	South Carolina					499.73
30	Tennessee					2,043.41
31	Texas					29.30
32	Virginia					
33	West Virginia					.67
34	Wisconsin					.02
	Total			6,213.91	6,213.91	6,963.96
	Collections for fiscal year ended June 30, 1883	$200.50		4,002.05	4,202.55	9,745.05

OF INTERNAL REVENUE, ETC.—Continued.

PENALTIES, ETC.							
Unassessed penalties.	Penalties upon unstamped instruments.	United States' share of penalties recovered by suits.	Penalties received on compromises.	Interest.	Costs.	Total of penalties, etc., collected.	
			$201.00		$387.48	$588.48	1
		$12.40	408.75			421.15	2
$592.25		159.02	4,720.10			5,471.37	3
							4
63.74		30.00	842.50	$85.58	1,541.21	2,563.63	5
4.06		200.00				204.06	6
805.06			2,475.71		253.84	3,534.61	7
31.60		5,415.80	4,225.00	41.76	1,330.85	11,054.10	8
13.90	$5.00	273.80	75.00	31.35	150.67	549.72	9
1,323.00		1,359.60	385.17	1.56	826.66	3,895.78	10
6.30				1.32	188.30	195.92	11
1,968.21		323.90	54.10	134.97	854.46	3,335.64	12
17.70		1,143.91	1,405.00	8.45	951.35	3,526.41	13
50.71		104.50	104.06	15.15		275.32	14
17.64		993.97		12.57	659.60	1,683.78	15
70.05		3,248.12	215.00	52.29	2,632.82	6,218.28	16
		209.89	160.00	65.21	119.50	554.09	17
1.52			225.00	21.48	2,780.56	3,028.56	18
							19
		111.65	70.00	.10		181.75	20
10.75		1,227.63	194.17		673.28	2,105.82	21
19.29	5.00		1,037.00	.92	255.40	1,317.61	22
.70		23.40	95.60	.82		119.92	23
300.69	5.00	873.88	7,065.89	22.07	39.03	8,806.59	24
383.27		99.00	830.60	120.94	5,267.05	6,700.86	25
509.44		325.00	732.30	16.16	789.22	2,372.12	26
			53.00		410.00	463.00	27
78.06	62.60		2,219.50	32.40	800.53	3,192.49	28
7.07		9.00	275.86	16.96	98.40	407.29	29
6,093.06						6,666.06	30
790.91			439.32	7.66	354.99	1,592.88	31
278.01		1,048.79	621.05	1.13		1,948.98	32
33.12						33.12	33
10.26		100.00	900.00	2.01	970.23	1,982.50	34
14,553.85	77.00	17,298.65	30,090.98	698.86	22,344.55	84,991.89	
29,658.24	257.73	33,533.18	76,064.03	1,672.06	23,307.35	155,547.61	

A.—RECAPITULATION OF RECEIPTS FROM EACH GENERAL SOURCE OF INTERNAL REVENUE AND THE AMOUNTS REFUNDED IN THE SEVERAL STATES AND TERRITORIES.

STATES AND TERRITORIES.	DISTILLED SPIRITS.			TOBACCO.		
	Total.	Refunded.	Net total.	Total.	Refunded.	Net total.
Alabama	$33,186.56	.....	$33,186.56	$35,839.77	.....	$35,839.77
Arkansas	81,854.05	a333.40	81,520.65	33,199.51	.....	33,199.51
California	877,668.51	1,466.77	876,201.74	503,159.01	$53.94	503,105.07
Colorado	73,689.67	.....	73,689.67	53,919.29	.....	53,919.29
Connecticut	213,986.59	.....	213,986.59	157,925.85	.....	157,925.85
Florida	9,535.92	.....	9,535.92	412,518.35	.....	412,518.35
Georgia	370,709.11	b3,462.30	367,246.81	44,517.59	.....	44,517.59
Illinois	27,436,757.14	26.02	27,436,731.12	1,257,546.99	46.66	1,257,500.33
Indiana	5,022,356.76	141.30	5,022,215.46	219,132.23	.....	219,132.23
Iowa	73,495.96	.....	73,495.96	210,699.18	.....	210,699.18
Kansas	32,124.33	.....	32,124.33	91,023.47	.....	91,023.47
Kentucky	15,078,795.19	2,247.20	15,076,547.99	1,546,222.39	.....	1,546,222.39
Louisiana	159,521.87	.....	159,521.87	325,394.16	.....	325,394.16
Maryland	1,983,524.45	6.30	1,983,518.15	1,382,761.44	.....	1,382,761.44
Massachusetts	1,074,406.38	.....	1,074,406.38	361,710.04	.....	361,710.04
Michigan	154,488.53	.....	154,488.53	1,276,604.66	.....	1,276,604.66
Minnesota	926,704.88	.....	926,704.88	143,306.07	.....	143,306.07
Missouri	2,282,630.80	124.52	2,282,506.28	3,871,246.27	c286.69	3,870,959.58
Montana	65,334.47	d7.99	65,326.48	18,829.37	.....	18,829.37
Nebraska	1,973,496.56	.....	1,973,496.56	97,4 9.97	30.00	97,469.97
New Hampshire	79,667.09	.....	79,667.09	61,373.24	.....	61,373.24
New Jersey	568,778.06	.....	568,778.06	2,461,606.02	.....	2,461,606.02
New Mexico	42,106.20	.....	42,106.20	6,818.86	.....	6,818.86
New York	2,804,438.49	418.50	2,804,019.99	5,264,589.09	c248.15	5,264,340.94
North Carolina	594,007.44	127.80	593,879.64	1,865,173.63	24.78	1,865,148.85
Ohio	7,222,168.71	.....	7,222,168.71	2,307,535.65	99.84	2,307,435.81
Oregon	73,136.34	.....	73,136.34	39,349.94	.....	39,349.94
Pennsylvania	2,846,466.97	f731.90	2,845,735.07	3,422,052.71	g3,825.03	3,418,227.68
South Carolina	51,006.10	89.10	50,917.00	19,786.96	.....	19,786.96
Tennessee	826,837.77	98.31	826,739.46	182,293.10	38.14	182,254.96
Texas	91,266.39	29.70	91,236.69	59,036.00	.....	59,036.00
Virginia	248,700.88	307.24	248,393.64	3,006,520.83	12.00	3,006,508.83
West Virginia	286,711.22	.....	286,711.22	398,051.44	.....	398,051.44
Wisconsin	652,046.94	.....	652,046.94	730,677.34	.....	730,677.34
Total	74,312,206.33	9,318.35	74,302,887.98	31,866,860.42	4,665.23	31,862,195.19
Collections for fiscal year ended June 30, 1888	69,306,166.41	18,735.11	69,287,431.30	30,662,431.53	26,355.80	30,636,075.73

a Court costs.
b Including $3,150 circulation.
c Income.
d Penalties.
e Interest on bonds.
f Including $76.85 court costs.
g Including $3,413.68 interest on bonds.

A.—RECAPITULATION OF RECEIPTS FROM EACH GENERAL SOURCE OF INTERNAL REVENUE, ETC.—Continued.

STATES AND TERRITORIES.	FERMENTED LIQUORS.			OLEOMARGARINE.		
	Total.	Refunded.	Net total.	Total.	Refunded.	Net total.
Alabama	$20,557.55		$20,557.55	$2,590.00		$2,590.00
Arkansas	1,602.51		1,602.51	4,642.00	$400.00	4,242.00
California	709,613.82		709,613.82	24.00		24.00
Colorado	162,670.75		162,670.75	3,836.32		3,836.32
Connecticut	257,614.71		257,614.71	153,624.70	24.00	153,600.70
Florida	588.42		588.42	1,236.00		1,236.00
Georgia	17,253.83		17,253.83	104.00		104.00
Illinois	1,896,595.39		1,896,595.39	405,463.44		405,463.44
Indiana	460,391.77		460,391.77	85,805.86		85,805.86
Iowa	104,227.98		104,227.98	258.00		258.00
Kansas	11,132.90		11,132.90	48,955.60		48,955.60
Kentucky	277,316.78		277,316.78	5,036.00		5,036.00
Louisiana	140,415.22		140,415.22	3,140.00		3,140.00
Maryland	618,968.55		618,968.55	1,395.80		1,395.80
Massachusetts	943,864.16		943,864.16	40,538.66		40,538.66
Michigan	499,655.96		499,655.96	23,312.00		23,312.00
Minnesota	307,231.20		307,231.20			
Missouri	1,561,506.55		1,561,506.55	12,196.00		12,196.00
Montana	74,125.97		74,125.97	4,352.00		4,352.00
Nebraska	174,428.40		174,428.40	3,077.51		3,077.51
New Hampshire	322,569.93		322,569.93	1,384.00		1,384.00
New Jersey	1,281,878.98		1,281,878.98	6,036.00		6,036.00
New Mexico	9,890.69		9,890.69	124.00		124.00
New York	7,568,516.61		7,568,516.61	668.00		668.00
North Carolina	1,248.34		1,248.34	20.00		20.00
Ohio	1,976,483.24		1,976,483.24	58,060.64		58,060.64
Oregon	110,695.71		110,695.71	2,880.00		2,880.00
Pennsylvania	2,236,268.90		2,236,268.90	12,789.38		12,789.38
South Carolina	10,014.43		10,014.43	8.00		8.00
Tennessee	46,034.43		46,034.43	2,456.00		2,456.00
Texas	72,141.05		72,141.05	4,052.00		4,052.00
Virginia	45,663.79		45,663.79	792.00		792.00
West Virginia	96,591.62		96,591.62	276.00		276.00
Wisconsin	1,706,075.12		1,706,075.12	5,114.00		5,114.00
Total	23,723,835.26		23,723,835.26	894,247.91	424.00	893,823.91
Collections for fiscal year ended June 30, 1883	23,324,218.48		23,324,218.48	864,139.88	9.12	864,130.76

B.—STATEMENT OF THE NUMBER AND VALUE OF STAMPS FOR FERMENTED LIQUORS REVENUE DURING THE FISCAL

Denominations.	Number issued in—					
	July.	Aug.	Sept.	Oct.	Nov.	Dec.
Hogshead, at $2	68,000	78,700	86,500	126,200	172,500	102,700
Barrel, at $1	260,500	173,100	289,000	132,000	289,000	137,500
One-half barrel, at 50 cents	1,744,500	1,453,000	1,259,000	870,500	956,000	788,000
One-third barrel, at 33⅓ cents	24,000	23,100	99,000	.....	81,000	21,000
One-quarter barrel, at 25 cents	5,362,000	4,322,000	3,946,000	3,443,000	2,915,000	3,317,000
One sixth barrel, at 16⅔ cents	291,000	223,800	171,000	69,300	246,000	171,000
One-eighth barrel, at 12½ cents	767,000	1,087,000	697,000	905,500	500,000	401,000
Total	8,517,000	7,360,700	6,547,500	5,546,500	5,160,700	4,938,800
Number of brewers' permits	20,000	.....	.....	4,000	20,000	2,000

B.—STATEMENT OF KIND, NUMBER, AND VALUE OF SPECIAL-TAX STAMPS ISSUED TO

Denominations.	Value of each stamp.	Number issued in—			
		July.	Aug.	Sept.	Oct.
Rectifiers of less than 500 barrels	$100.00	.....	.....	10	10
Rectifiers of 500 barrels or more	200.00	.....	.....	10	.....
Retail liquor dealers	25.00	900	100	300	600
Wholesale liquor dealers	100.00	20	.....	.....	10
Manufacturers of stills	50.00	.....	.....	.....	.....
Stills manufactured	20.00	.....	.....	10	.....
Worms manufactured	20.00	.....	.....	20	.....
Brewers, annual manufacture less than 500 barrels	50.00	10	.....	.....	.....
Brewers, of 500 barrels or more	100.00	.....	.....	.....	.....
Retail dealers in malt liquors	20.00	180	110	180	50
Wholesale dealers in malt liquors	50.00	50	70	30	40
Manufacturers of cigars	6.00	120	40	160	80
Dealers in leaf-tobacco of 25,000 pounds or less	5.00	.....	10	10	10
Dealers in leaf-tobacco	12.00	10	10	20	.....
Retail dealers in leaf-tobacco	250.00	.....	.....	.....	.....
Dealers in manufactured tobacco	2.40	2,400	3,700	4,900	4,700
Manufacturers of tobacco	6.00	10	.....	10	10
Peddlers of tobacco, first class	30.00	.....	.....	.....	.....
Peddlers of tobacco, second class	15.00	10	10	10	.....
Peddlers of tobacco, third class	7.20	.....	20	30	10
Peddlers of tobacco, fourth class	3.00	.....	.....	20	.....
Manufacturers of oleomargarine	600.00	.....	.....	.....	.....
Manufacturers of oleomargarine	550.00	.....	.....	.....	.....
Manufacturers of oleomargarine	500.00	.....	.....	10	.....
Retail dealers in oleomargarine	48.00	.....	.....	10	260
Wholesale dealers in oleomargarine	480.00	.....	.....	10	10
Aggregate number of stamps	.....	3,710	4,070	5,750	5,790
Aggregate value of stamps	.....	$37,910	$17,784	$39,988	$49,222

B.—STATEMENT OF NUMBER AND VALUE OF STAMPS FOR OLEOMARGARINE ISSUED TO

Denominations.	Number used in—				
	July.	Aug.	Sept.	Oct.	Nov.
10 pounds	20,000	32,000	26,000	54,400	29,400
20 pounds	10,200	14,000	6,000	15,400	8,000
30 pounds	21,000	4,000	33,000	11,800	17,000
40 pounds	600	3,000	24,000	27,000	9,600
50 pounds	4,600	6,000	27,000	33,800	14,600
60 pounds	10,000	.....	.....	1,000	2,000
70 pounds	.....	400	.....	600	200
80 pounds	.....	.....	.....	.....	.....
90 pounds	.....	.....	.....	.....	200
100 pounds	.....	200	.....	.....	.....
Total stamps for oleomargarine	66,400	59,600	116,000	144,000	81,000
Exportation stamps for oleomargarine	2,800	14,000	4,000	14,800	8,000
Aggregate of stamps	69,200	73,600	120,000	158,800	89,000
Aggregate value	$49,712	$34,488	$94,480	$107,480	$58,180

AND THE NUMBER OF BREWERS' PERMITS ISSUED TO COLLECTORS OF INTERNAL YEAR ENDED JUNE 30, 1889.

Number issued in—						Aggregate number of each denomination.	Aggregate value of each denomination.
Jan.	Feb.	Mar.	Apr.	May.	June.		
126,000	182,500	70,500	158,600	101,600	93,000	1,366,200	$2,732,400
116,700	239,800	130,500	346,100	311,200	172,500	2,598,500	2,598,500
357,500	1,018,300	744,500	1,359,000	1,600,000	1,458,000	14,108,800	7,054,150
21,000	12,600	18,000	76,500	30,000	24,000	436,200	145,400
2,578,500	2,658,000	2,182,000	4,085,000	5,412,400	4,795,500	45,016,000	11,254,000
225,000	38,400	153,900	223,200	303,000	176,460	2,293,200	382,200
466,000	679,000	584,600	988,400	1,010,500	814,000	8,900,000	1,112,500
4,290,700	4,834,600	3,884,000	7,236,200	8,768,300	7,533,400	74,718,400	25,279,150
6,800	26,000	800	6,800	.....	20,000	106,400	.....

COLLECTORS OF INTERNAL REVENUE DURING THE FISCAL YEAR ENDED JUNE 30, 1889.

Number issued in—								Aggregate number of each denomination.	Aggregate value of each denomination.
Nov.	Dec.	Jan.	Feb.	Mar.	Apr.	May.	June.		
.....	10	10	.....	930	430	30	30	1,460	$146,000
.....	.....	.....	.....	520	260	40	10	840	168,000
1,700	500	1,000	1,400	141,300	50,600	2,300	1,100	201,800	5,045,000
.....	10	60	70	3,060	1,540	120	60	4,950	495,000
.....	.....	30	10	100	30	10	10	190	9,500
.....	.....	80	10	110	30	10	10	210	4,200
.....	.....	20	10	90	30	10	20	200	4,000
.....	.....	.....	20	790	340	10	20	1,200	60,000
.....	10	10	10	1,470	460	70	50	2,080	208,000
160	40	110	50	6,030	1,870	170	150	9,100	182,000
20	20	60	30	3,070	760	130	80	4,360	218,000
190	110	150	200	15,110	6,050	240	180	22,630	135,780
.....	50	20	110	850	730	.....	30	1,820	9,100
.....	.....	10	170	2,420	2,020	40	140	4,840	58,080
.....	10	.....	.....	.....	10	10	.....	30	7,500
5,900	6,500	6,800	7,900	426,200	129,700	8,700	4,000	611,400	1,467,360
.....	10	.....	20	730	530	90	90	1,500	9,000
.....	.....	.....	.....	110	70	10	.....	190	5,700
.....	20	.....	.....	590	300	10	30	980	14,700
10	.....	10	10	810	260	30	20	1,210	8,712
.....	.....	10	10	470	220	30	30	790	2,844
.....	.....	.....	.....	80	30	.....	.....	110	66,000
.....	.....	.....	.....	.....	.....	.....	.....	.....	.....
10	.....	.....	.....	.....	.....	.....	.....	20	10,000
380	580	220	70	2,720	660	40	20	4,960	238,080
10	.....	20	.....	360	100	.....	.....	510	244,800
8,380	7,870	8,570	10,100	607,920	197,030	12,100	6,090	877,380	.....
$90,112	$64,510	$78,408	$73,738	$6,027,344	$2,143,194	$127,334	$67,812	.....	8,817,356

COLLECTORS OF INTERNAL REVENUE DURING THE FISCAL YEAR ENDED JUNE 30, 1889.

Number issued in—							Aggregate number of each denomination.	Aggregate value of each denomination.
Dec.	Jan.	Feb.	Mar.	Apr.	May.	June.		
50,000	23,000	45,000	12,200	46,000	20,200	4,000	362,200	$137,636
24,000	16,800	6,000	2,200	3,000	13,000	.....	118,600	68,788
27,000	9,000	11,000	2,200	12,000	21,200	7,000	176,200	137,436
25,400	2,000	26,000	1,200	5,400	5,600	2,600	132,400	129,752
29,000	24,200	12,400	20,200	8,600	29,800	8,000	213,200	251,576
23,400	4,000	24,000	1,200	1,200	2,000	.....	68,800	94,944
400	.....	.....	.....	2,000	.....	.....	3,600	5,688
.....	.....	.....	.....	.....	200	.....	200	356
.....	.....	.....	.....	.....	.....	.....	200	396
.....	.....	.....	.....	200	.....	.....	400	872
179,200	79,000	124,400	39,200	78,400	92,000	16,600	1,075,800	.....
4,000	12,000	8,000	8,800	9,200	20,000	.....	105,600	.....
183,200	91,000	132,400	48,000	87,600	112,000	16,600	1,181,400	.....
$146,616	$61,540	$102,392	$34,296	$49,272	$75,520	$13,068	.....	827,444

B.—STATEMENT OF THE NUMBER AND VALUE OF STAMPS FOR DISTILLED SPIRITS JUNE 30,

Denominations.	Number issued in—				
	July.	Aug.	Sept.	Oct.	Nov.
TAX-PAID STAMPS.					
10 gallons	1,500	3,750	300	750	4,500
20 gallons	21,150	30,900	13,350	58,200	50,400
30 gallons	10,950	19,950	2,850	17,700	13,800
40 gallons	44,100	53,400	42,150	96,900	38,700
50 gallons	150	750	150	1,950	1,050
60 gallons	150	1,650	150	1,800	750
70 gallons	300	1,500		1,650	
80 gallons	40,800	30,750	25,050	22,500	29,250
90 gallons		150	900	1,800	
100 gallons					
110 gallons					
120 gallons					
130 gallons					
Total tax-paid stamps	119,100	142,800	84,900	203,250	138,450
OTHER THAN TAX-PAID STAMPS.					
Stamps for rectified spirits.					
5 gallons	10,800	4,400	11,600	6,200	11,200
10 gallons	17,000	5,200	8,400	18,400	18,200
20 gallons	14,600	4,600	9,400	25,200	11,200
30 gallons	15,000	2,800	20,800	14,200	30,800
40 gallons	51,600	94,400	52,000	56,800	139,600
50 gallons	400	2,000	2,800	17,000	1,200
60 gallons				1,400	
70 gallons	1,000			1,800	2,400
80 gallons	400	200	11,000	2,600	3,400
90 gallons	200		1,000	200	600
100 gallons					
110 gallons					
120 gallons					200
130 gallons					200
Total stamps for rectified spirits	111,000	113,600	117,000	143,800	219,600
Wholesale liquor dealers' stamps.					
5 gallons	5,700	11,400	12,000	6,000	9,300
10 gallons	10,200	24,600	34,200	13,500	22,800
20 gallons	4,200	4,500	15,000	8,100	18,600
30 gallons		300	4,500	300	
40 gallons	6,900	14,400	15,900	10,500	33,900
50 gallons		600	300	300	6,900
60 gallons					
70 gallons		300			
80 gallons			1,500		
90 gallons					
100 gallons					
110 gallons					1,500
120 gallons					
130 gallons		300			
Total wholesale liquor dealers' stamps	27,000	56,400	83,400	88,700	93,000
Stamps for imported spirits.					
5 gallons					
10 gallons			300		300
20 gallons	300				
30 gallons					300
40 gallons					
50 gallons					
60 gallons					
70 gallons					
80 gallons					
90 gallons					
100 gallons					

AND THE NUMBER OF BREWERS' PERMITS ISSUED TO COLLECTORS OF INTERNAL YEAR ENDED JUNE 30, 1889.

Number issued in—						Aggregate number of each denomination.	Aggregate value of each denomination.
Jan.	Feb.	Mar.	Apr.	May.	June.		
126,000	182,500	70,500	158,600	101,600	93,000	1,266,200	$2,732,400
116,700	239,800	130,500	346,100	311,200	172,500	2,598,500	2,598,500
857,500	1,018,300	744,500	1,359,000	1,600,000	1,458,000	14,108,300	7,054,150
21,000	12,600	18,000	76,500	30,000	24,000	436,200	145,400
2,578,500	2,658,000	2,182,000	4,085,000	5,412,400	4,795,500	45,016,000	11,254,000
225,000	38,400	153,900	223,200	303,000	176,400	2,293,200	382,200
466,000	679,000	584,600	988,400	1,010,500	814,000	8,900,000	1,112,500
4,390,700	4,834,600	3,884,000	7,236,200	8,768,300	7,533,400	74,718,400	25,279,150
6,800	26,000	800	6,800	.....	20,000	106,400	.....

COLLECTORS OF INTERNAL REVENUE DURING THE FISCAL YEAR ENDED JUNE 30, 1889.

Number issued in—								Aggregate number of each denomination.	Aggregate value of each denomination.
Nov.	Dec.	Jan.	Feb.	Mar.	Apr.	May.	June.		
.....	10	10	.....	930	430	30	30	1,460	$146,000
.....	.....	.....	.....	520	260	40	10	840	168,000
1,700	500	1,000	1,400	141,300	50,600	2,300	1,100	201,800	5,045,000
.....	10	60	70	3,060	1,540	120	60	4,950	495,000
.....	.....	30	10	100	30	10	10	190	9,500
.....	.....	30	10	110	30	10	10	210	4,200
.....	.....	20	10	90	30	10	20	200	4,000
.....	.....	.....	20	790	340	10	30	1,200	60,000
.....	10	10	10	1,470	460	70	50	2,080	208,000
160	40	110	50	6,030	1,870	170	150	9,100	182,000
20	20	60	30	3,070	760	130	80	4,360	218,000
190	110	130	200	15,110	6,050	240	180	22,630	135,780
.....	50	20	110	850	730	.....	30	1,820	9,100
.....	.....	10	170	2,420	2,020	40	140	4,840	58,080
.....	10	.....	.....	.....	10	10	.....	30	7,500
5,900	6,500	6,800	7,900	426,200	129,700	8,700	4,000	611,400	1,467,360
.....	10	.....	20	730	530	90	90	1,500	9,000
.....	.....	.....	.....	110	70	10	.....	190	5,700
.....	20	.....	.....	590	300	10	30	980	14,700
10	.....	10	10	810	260	30	20	1,210	8,712
.....	.....	10	10	470	220	30	30	790	2,844
.....	.....	.....	.....	80	30	.....	.....	110	66,000
.....	.....	.....	.....	.....	.....	.....	.....	.....	.....
10	.....	.....	.....	.....	.....	.....	.....	20	10,000
380	580	220	70	2,720	660	40	20	4,960	238,080
10	.....	20	.....	360	100	.....	.....	510	244,800
8,380	7,870	8,570	10,100	607,920	197,030	12,100	6,090	877,380	.....
$90,112	$64,510	$78,408	$73,738	$6,027,344	$2,143,194	$127,334	$67,812	.....	8,817,356

COLLECTORS OF INTERNAL REVENUE DURING THE FISCAL YEAR ENDED JUNE 30, 1889.

Number issued in—							Aggregate number of each denomination.	Aggregate value of each denomination.
Dec.	Jan.	Feb.	Mar.	Apr.	May.	June.		
50,000	23,000	45,000	12,200	46,000	20,200	4,000	362,200	$137,636
24,000	16,800	6,000	2,200	3,000	13,000	.....	118,600	68,788
27,000	9,000	11,000	2,200	12,000	21,200	7,000	176,200	137,436
25,400	2,000	26,000	1,200	5,400	5,600	2,600	132,400	129,752
29,000	24,200	12,400	20,200	8,600	29,800	8,000	213,200	251,576
22,400	4,000	24,000	1,200	1,200	2,000	.....	68,800	94,944
400	.....	.....	.....	2,000	.....	.....	3,600	5,688
.....	.....	.....	.....	.....	200	.....	200	356
.....	.....	.....	.....	.....	.....	.....	200	396
.....	.....	.....	.....	200	.....	.....	400	872
179,200	79,000	124,400	39,200	78,400	92,000	16,600	1,075,800	.....
4,000	12,000	8,000	8,800	9,200	20,000	.....	105,600	.....
183,200	91,000	132,400	48,000	87,600	112,000	16,600	1,181,400	.....
$146,616	$61,540	$102,392	$34,296	$49,272	$75,520	$13,068	.....	837,444

B.—STATEMENT OF THE NUMBER AND VALUE OF STAMPS FOR DISTILLED SPIRITS JUNE 30,

Denominations.	Number issued in—				
	July.	Aug.	Sept.	Oct.	Nov.
TAX-PAID STAMPS.					
10 gallons	1,500	3,750	300	750	4,500
20 gallons	21,150	30,900	13,350	58,200	50,400
30 gallons	10,950	19,950	2,850	17,700	13,800
40 gallons	44,100	53,400	42,150	96,900	38,700
50 gallons	150	750	150	1,950	1,050
60 gallons	150	1,650	150	1,800	750
70 gallons	300	1,500		1,650	
80 gallons	40,800	30,750	25,050	22,500	29,250
90 gallons		150	900	1,800	
100 gallons					
110 gallons					
120 gallons					
130 gallons					
Total tax-paid stamps	119,100	142,800	84,900	203,250	138,450
OTHER THAN TAX-PAID STAMPS.					
Stamps for rectified spirits.					
5 gallons	10,800	4,400	11,600	6,200	11,200
10 gallons	17,000	5,200	8,400	18,400	18,200
20 gallons	14,600	4,600	9,400	25,200	11,200
30 gallons	15,000	2,800	20,800	14,200	30,800
40 gallons	51,600	94,400	52,000	56,800	132,600
50 gallons	400	2,000	2,800	17,000	1,200
60 gallons				1,400	
70 gallons	1,000			1,800	2,400
80 gallons	400	200	11,000	2,600	3,400
90 gallons	200		1,000	200	600
100 gallons					
110 gallons					
120 gallons					200
130 gallons					200
Total stamps for rectified spirits	111,000	113,600	117,000	143,800	212,000
Wholesale liquor dealers' stamps.					
5 gallons	5,700	11,400	12,000	6,000	9,300
10 gallons	10,200	24,600	34,200	13,500	22,800
20 gallons	4,200	4,500	15,000	8,100	18,600
30 gallons		300	4,500	300	
40 gallons	6,900	14,400	15,900	10,500	33,900
50 gallons		600	300	300	6,900
60 gallons					
70 gallons		300			
80 gallons			1,500		
90 gallons					
100 gallons					
110 gallons					1,500
120 gallons					
130 gallons		300			
Total wholesale liquor dealers' stamps	27,000	56,400	83,400	38,700	93,000
Stamps for imported spirits.					
5 gallons					
10 gallons			300		300
20 gallons	300				
30 gallons					300
40 gallons					
50 gallons					
60 gallons					
70 gallons					
80 gallons					
90 gallons					
100 gallons					

ISSUED TO COLLECTORS OF INTERNAL REVENUE DURING THE FISCAL YEAR ENDED 1889.

Number issued in—							Aggregate number of each denomination.	Aggregate value of each denomination.
Dec.	Jan.	Feb.	Mar.	Apr.	May.	June.		
5,100	1,050	1,650	3,600	1,650	1,050	750	25,650	$438,615
57,000	19,350	36,600	13,500	35,250	15,900	42,000	393,600	10,272,960
16,350	7,050	28,650	18,450	14,250	45,000	17,700	212,700	7,455,770
64,050	76,350	63,000	47,250	46,800	86,700	31,350	690,750	30,462,075
1,350	.....	1,050	1,800	2,100	750	300	11,400	605,340
750	1,200	150	1,800	.....	1,800	.....	10,200	633,420
.....	.....	.....	300	.....	1,650	150	5,550	394,605
27,750	47,100	22,500	18,150	33,000	32,100	14,400	443,350	27,502,335
1,950	150	2,400	150	.....	150	150	7,800	694,980
.....	.....	.....	.....	.....	.....	.....	.....	.....
.....	.....	.....	.....	.....	.....	.....	.....	.....
.....	.....	.....	.....	.....	.....	150	150	17,415
.....	150	.....	.....	.....	.....	.....	150	18,765
174,300	152,400	156,000	105,000	133,050	185,100	106,950	1,701,300	78,506,280
13,200	12,000	2,600	2,400	6,400	16,200	15,400	112,400	.....
8,800	8,400	19,200	13,400	17,200	12,800	8,400	155,400	.....
18,800	17,600	15,400	2,200	8,200	18,000	11,200	156,400	.....
13,200	8,400	12,000	9,000	32,800	16,600	18,800	194,400	.....
48,000	117,000	50,400	61,000	62,800	84,400	35,600	853,600	.....
3,000	5,200	2,200	2,200	10,000	600	5,200	51,800	.....
200	.....	.....	.....	600	.....	.....	2,200	.....
400	.....	2,000	.....	800	.....	.....	8,400	.....
1,400	13,000	4,600	4,000	3,600	400	11,200	55,800	.....
1,200	200	4,000	.....	200	200	200	8,000	.....
.....	200	.....	200	.....	200	.....	600	.....
.....	.....	1,000	.....	200	200	.....	1,400	.....
.....	.....	1,000	.....	.....	200	.....	1,400	.....
200	.....	.....	.....	200	600	.....	1,200	.....
108,400	182,000	114,400	94,400	143,000	150,400	106,000	1,603,000	.....
3,900	10,200	5,700	12,900	3,900	5,100	9,300	95,400	.....
14,700	16,800	17,100	18,000	18,900	8,700	28,400	222,900	.....
5,400	15,000	8,400	9,000	7,200	1,200	6,000	102,600	.....
.....	300	1,500	900	900	.....	300	9,000	.....
15,900	17,400	10,800	18,900	37,500	12,000	5,100	199,200	.....
1,500	8,100	6,600	3,000	.....	3,600	.....	30,900	.....
.....	300	.....	.....	.....	.....	.....	300	.....
.....	.....	.....	.....	.....	.....	.....	300	.....
.....	.....	.....	.....	.....	.....	.....	1,500	.....
.....	.....	.....	.....	.....	.....	.....	.....	.....
.....	.....	.....	.....	.....	.....	.....	.....	.....
.....	.....	.....	.....	.....	.....	.....	1,500	.....
.....	.....	.....	.....	.....	.....	.....	.....	.....
.....	300	.....	.....	.....	.....	.....	600	.....
41,400	68,400	50,100	62,700	68,400	30,600	44,100	664,200	.....
.....	900	.....	.....	300	.....	600	1,800	.....
.....	300	.....	.....	.....	300	900	2,100	.....
.....	300	.....	.....	.....	300	900	1,800	.....
.....	300	.....	.....	.....	300	.....	900	.....
.....	.....	.....	.....	.....	300	.....	300	.....
.....	.....	.....	.....	.....	300	.....	300	.....
.....	.....	.....	.....	.....	.....	.....	.....	.....
.....	.....	.....	.....	.....	.....	.....	.....	.....
.....	.....	.....	.....	.....	.....	.....	.....	.....
.....	.....	.....	.....	.....	.....	.....	.....	.....
.....	.....	.....	.....	.....	.....	.....	.....	.....

B.—STATEMENT OF THE NUMBER AND VALUE OF

Denominations.	Number issued in—				
	July.	Aug.	Sept.	Oct.	Nov.
Stamps for imported spirits—Continued.					
110 gallons					
120 gallons					
130 gallons					
Total stamps for imported spirits	300		200		600
Warehouse	92, 400	18, 800	66, 800	127, 200	242, 000
Special warehouse	15, 300	4, 500			4, 200
Rewarehousing		7, 500			
Exportation	2, 400				800
Total other than tax-paid stamps	248, 400	200, 800	267, 500	309, 700	568, 200
Grand aggregate of stamps	367, 500	343, 600	352, 400	512, 950	696, 650
Aggregate value of tax-paid stamps	$6, 213, 510	$6, 651, 180	$4, 416, 390	$8, 721, 675	$6, 023, 695
Aggregate value of other than tax-paid stamps	$240				$80
Grand aggregate value	$6, 213, 750	$6, 651, 180	$4, 416, 390	$8, 721, 675	$6, 023, 775

STAMPS FOR DISTILLED SPIRITS, ETC.—Continued.

Number issued in—							Aggregate number of each denomination.	Aggregate value of each denomination.
Dec.	Jan.	Feb.	Mar.	Apr.	May.	June.		
.....	.....	.....	.....	.....	.....	.....	.....	.....
.....	.....	.....	.....	.....	.....	.....	.....	.....
.....	.....	.....	.....	.....	.....	.....	.....	.....
.....	1,800	.....	.....	300	1,500	2,400	7,200	.....
810,800	203,600	197,600	90,800	265,600	215,600	58,400	1,889,600	.....
4,200	2,400	2,700	.....	4,200	.....	300	38,400	.....
300	.....	3,600	.....	300	300	.....	12,000	.....
4,000	6,400	11,600	10,800	16,000	8,000	4,000	58,000	$5,800
469,100	464,600	380,000	258,700	491,800	406,400	215,200	4,272,400	.....
642,400	617,000	536,600	363,700	624,850	591,500	322,150	5,973,700	.....
$7,488,180	$8,016,840	$6,848,550	$4,841,100	$6,267,105	$8,689,410	$4,323,645	.....	$78,506,280
$400	$640	$1,160	$1,080	$1,000	$800	$400	.....	$5,800
$7,488,580	$8,017,480	$6,849,710	$4,842,180	$6,268,105	$8,690,210	$4,324,045	.....	$78,512,080

B.—STATEMENT SHOWING THE NUMBER AND VALUE OF STAMPS FOR TOBACCO, DURING THE FISCAL YEAR

Denominations.	Number issued in—					
	July.	August.	September.	October.	November.	December.
Tobacco (8 cents per pound).						
1 ounce	1,060,000	400,000	1,100,000	1,500,000	520,000	1,376,000
2 ounces	13,897,000	12,866,000	15,681,000	17,972,000	13,170,000	18,219,000
3 ounces	1,050,000	810,000	941,000	980,000	1,342,000	1,318,000
4 ounces	8,768,500	6,534,000	8,657,000	9,431,000	9,309,000	8,214,000
8 ounces	1,619,460	1,023,015	1,526,610	1,249,515	1,877,010	1,062,560
16 ounces	529,500	416,220	387,495	538,155	583,500	346,290
¼ pound	36,000	46,200	33,000	42,000	25,800	24,000
1 pound	12,600	32,400	42,600	7,200	36,000	9,600
2 pounds	14,100	19,500	27,600	16,200	22,800	15,600
3 pounds	20,700	32,400	52,800	19,200	32,600	36,000
4 pounds	12,900	18,000	66,000	73,200	5,400	.....
5 pounds	77,100	26,412	93,000	25,500	61,200	20,400
10 pounds	256,400	297,600	305,600	352,400	368,000	160,400
20 pounds	282,800	86,000	188,800	234,000	185,600	88,000
30 pounds	94,000	47,200	88,000	64,000	5,200	58,000
40 pounds	42,000	47,600	25,200	24,400	23,600	36,400
50 pounds	.....	10,400	8,000	.....	4,800	4,400
60 pounds	.....	2,000	.....	1,600	1,200	800
Total	27,773,060	22,714,947	29,223,705	32,524,370	27,576,710	30,975,960
Foil-wrappers (8 cents per pound).						
1 ounce	2,239,200	2,409,920	2,262,080	2,628,800	2,413,600	2,212,080
2 ounces	8,640	4,320	7,200	19,520	8,000	2,880
4 ounces	.....	.....	.....	.....	.....	.....
8 ounces	.....	.....	.....	.....	.....	.....
Total	2,247,840	2,414,240	2,269,280	2,648,320	2,421,600	2,214,960
Snuff (8 cents per pound).						
½ ounce	960	19,600	.....	588,960	392,000	.....
1 ounce	695,212	2,627,968	2,421,580	2,442,160	2,030,560	1,646,792
2 ounces	440,640	885,600	676,080	771,120	670,140	833,760
3 ounces	60,000	20,000	50,000	.....	20,000	.....
4 ounces	100,400	66,000	95,000	200,000	70,000	136,000
6 ounces	540,000	360,000	640,000	552,000	480,000	680,000
8 ounces	3,600	13,200	30,400	1,800	25,200	5,600
16 ounces	39,000	35,000	63,000	74,600	36,000	53,500
¼ pound	6,600	1,200	9,600	2,880	6,600	3,600
1 pound	6,060	17,280	10,920	10,200	4,200	13,980
2 pounds	3,360	13,800	3,960	10,680	3,000	6,996
3 pounds	3,360	6,240	13,560	1,440	2,400	11,160
4 pounds	.....	1,200	.....	.....	.....	.....
5 pounds	9,780	14,292	12,000	18,120	7,200	12,996
10 pounds	2,000	1,600	2,800	2,800	2,000	1,600
20 pounds	1,200	1,200	3,600	1,200	800	1,200
Total	1,912,192	4,084,180	4,032,500	4,677,980	3,750,100	3,413,124
Exportation.						
Tobacco	4,000	17,200	6,400	800	3,200	17,600
Cigars	400	400	800	.....	.....	.....
Total	4,400	17,600	7,200	800	3,200	17,600
Cigars ($3 per thousand).						
25's	277,000	293,500	334,000	297,000	422,000	696,000
50's	5,202,000	4,263,000	4,934,000	5,172,000	4,812,000	4,668,000
100's	597,000	750,500	806,500	774,000	799,000	548,000
200's	34,500	11,000	13,000	14,000	30,000	6,500
250's	59,000	106,200	25,500	56,300	70,700	27,000
500's	.....	100	6,000	.....	10,100	5,105
Total	6,169,500	5,424,300	6,119,000	6,313,300	6,143,800	5,970,605
Cigarettes (50 cents per thousand).						
10's	15,360,000	15,040,000	18,960,000	15,216,800	17,736,800	10,801,200
20's	1,640,000	1,280,000	1,520,000	2,280,000	1,120,000	1,520,560
50's	14,040	.....	12,000	1,200	8,040	7,680
100's	33,000	10,000	20,000	20,000	23,000	12,000
Total	17,047,040	16,330,000	20,512,000	17,518,000	18,887,840	12,341,440

SNUFF, CIGARS, AND CIGARETTES ISSUED TO COLLECTORS OF INTERNAL REVENUE ENDED JUNE 30, 1889.

Number issued in—						Aggregate number of stamps issued.	Aggregate value of stamps issued.
January.	February.	March.	April.	May.	June.		
960,000	642,000	622,000	520,000	1,244,000	880,000	10,818,000	$54,090.00
15,226,000	14,040,200	13,490,000	17,921,000	17,375,000	18,964,000	188,812,200	1,888,122.00
907,000	320,000	816,000	831,000	280,000	1,220,000	10,845,000	164,675.00
8,042,000	8,687,000	7,001,600	10,927,000	6,971,000	10,185,000	102,727,100	2,054,542.00
1,556,715	1,427,910	1,167,000	1,622,250	1,262,520	1,403,100	16,798,605	671,944.20
596,700	490,215	553,305	550,005	454,005	521,100	5,906,400	477,312.00
27,000	67,404	31,404	63,600	30,408	36,912	464,328	18,573.12
36,300	57,800	19,200	28,200	31,200	6,000	293,100	23,448.00
2,400	2,000	15,600	2,700	5,400	504	145,404	28,264.64
39,600	25,200	38,400	54,300	22,800	50,400	425,400	102,096.00
72,600	21,600	15,600	73,800	19,200	78,000	459,300	146,976.00
43,500	59,400	25,500	90,000	55,200	24,504	601,776	240,710.40
291,200	314,800	331,600	368,000	249,600	331,600	3,627,200	5,518,344.00
210,400	242,800	195,200	180,400	160,400	218,800	2,273,200	5,273,824.00
28,800	63,600	70,000	37,600	38,400	68,800	663,600	2,070,432.00
14,400	50,400	38,400	18,800	26,400	39,200	388,880	1,524,096.00
6,000	4,000	16,000	.....	400	400	54,400	256,768.00
2,000	400	.....	400	1,600	2,800	12,800	70,656.00
28,056,615	26,506,729	24,476,809	33,289,055	28,227,533	34,031,120	345,376,613	20,572,873.36
2,538,800	1,840,400	2,446,040	2,570,400	2,526,400	2,333,600	28,421,320	142,106.60
7,200	4,320	.....	4,320	5,320	4,320	76,040	760.40
.....	.....	.....	.....	.....	.....	.....	.....
.....	.....	.....	.....	.....	.....	.....	.....
2,546,000	1,844,720	2,446,040	2,574,720	2,531,720	2,337,920	28,497,360	142,867.00
980	.....	980	.....	980	.....	1,004,500	2,511.25
2,375,128	3,190,488	1,819,360	2,460,192	2,258,508	1,226,000	25,193,448	125,967.24
560,088	1,130,652	302,460	686,880	717,768	423,360	8,098,488	80,984.88
.....	20,000	20,000	20,000	.....	120,000	330,000	4,950.00
90,000	240,000	120,000	104,000	80,600	140,000	1,442,000	28,840.00
440,000	710,500	540,000	560,000	620,600	820,000	6,943,100	208,293.00
2,200	27,200	5,200	5,200	1,200	4,000	124,800	4,992.00
37,000	60,000	37,000	54,000	54,000	55,500	598,600	47,888.00
9,600	3,000	10,200	2,400	7,800	5,100	68,580	2,743.20
12,144	7,800	10,800	14,880	6,600	5,100	119,964	9,597.12
7,344	9,000	17,400	3,840	3,660	11,100	94,140	15,062.40
2,784	9,000	11,160	1,200	3,360	11,100	76,704	18,408.96
.....	.....	600	.....	360	.....	2,160	691.20
12,180	12,600	18,060	7,920	15,600	17,460	164,208	65,683.20
2,800	1,600	1,600	1,200	2,800	1,600	24,400	19,520.00
3,200	1,600	3,200	1,200	1,600	800	20,800	33,280.00
3,555,448	5,423,440	2,918,460	3,982,912	3,775,436	2,840,120	44,305,892	669,412.45
1,200	400	13,200	1,600	9,600	9,200	84,400	.....
1,600	.....	800	1,600	400	.....	6,000	.....
2,800	400	14,000	3,200	10,000	9,200	90,400	.....
295,000	334,500	205,000	465,000	291,500	251,000	4,161,500	312,112.50
3,840,000	4,293,000	2,821,000	5,375,000	3,981,000	4,006,000	53,387,000	8,008,050.00
682,000	713,000	413,000	746,000	762,000	526,000	8,117,000	2,435,100.00
4,250	100	12,000	2,000	3,100	8,250	138,700	83,220.00
46,600	49,100	25,000	53,350	37,400	54,000	610,150	457,612.50
1,500	500	1,000	5,700	1,000	11,000	42,005	63,007.50
4,869,350	5,390,200	3,477,000	6,647,050	5,076,000	4,856,250	66,456,355	11,359,102.50
22,489,200	8,866,800	9,000,800	17,705,600	15,622,560	14,594,000	179,393,760	896,968.80
1,205,200	1,136,000	400,000	1,800,000	800,400	1,360,000	16,062,160	160,621.60
4,080	19,224	.....	13,200	1,800	4,608	85,872	2,146.80
8,000	2,000	14,000	34,000	18,500	7,000	201,500	10,075.00
23,706,480	10,024,024	9,414,800	19,552,800	14,443,260	15,965,608	195,743,292	1,069,812.20

B.—STATEMENT SHOWING THE NUMBER AND VALUE OF INTERNAL REVENUE DOCUMENTARY STAMPS ORDERED MONTHLY FROM THE OFFICE OF THE COMMISSIONER OF INTERNAL REVENUE DURING THE FISCAL YEAR ENDED JUNE 30, 1889.

Denominations.	Number ordered in—							Aggregate number of each denomination.	Aggregate value of each denomination.
	July.	September.	January.	March.	April.	May.	June.		
50 cents	1			1	5	1	1	9	$4.50
$2		1						1	2.00
$3			1					1	3.00
$5			1					1	5.00
Aggregate number	1	1	2	1	5	1	1	12	
Aggregate value	$0.50	$2.00	$8.00	$0.50	$2.50	$0.50	$0.50		$14.50

B.—STATEMENT SHOWING THE MONTHLY RECEIPTS FROM THE SALE OF DOCUMENTARY STAMPS FOR THE FISCAL YEAR ENDED JUNE 30, 1889.

Months.	Receipts.
July	$0.50
September	2.00
January	8.00
March	.50
April	2.50
May	.50
June	.50
Total	14.50

C.—COMPARATIVE TABLE SHOWING THE PERCENTAGES OF RECEIPTS FROM THE TIES, IN EACH STATE AND TERRITORY OF THE UNITED STATES, TO THE AGGREGATE 30, 1889.

[NOTE.—The percentages of receipts from the several general sources of revenue now exempt from continued

	STATES AND TERRITORIES.	SPIRITS.							
		Fiscal year ended June 30—							
		1864.	1865.	1866.	1867.	1868.	1869.	1870.	1871.
1	Alabama	.....	.....	.2098	.7495	.9487	.2661	.1870	.1571
2	Arizona (a)	.....	.....	.....	.0049	.0228	.0073	.0090	.0145
3	Arkansas	.....	.....	.0477	.1020	.2254	.0886	.1274	.1189
4	California (b)	.9530	2.3012	1.9756	6.0727	10.0058	2.5944	2.0606	2.4027
5	Colorado (c)	.0218	.0582	.0355	.0881	.1930	.0276	.0242	.0278
6	Connecticut (d)	.4493	1.1256	.7621	.8995	1.3819	.4935	.5213	.5272
7	Dakota (e)	.....	.....	.....	.0017	.0231	.0090	.0053	.0065
8	Delaware (f)	.0181	.2160	.0487	.0559	.1215	.0510	.0359	.0611
9	District of Columbia (g)	.1313	.2605	.1101	.1146	.2629	.0608	.0697	.0792
10	Florida	.....	.....	.0002	.0343	.0875	.0290	.0321	.0393
11	Georgia	.....	.....	.3988	.6705	.7666	.2826	.2168	.2669
12	Idaho (h)	.....	.....	.0395	.0368	.0658	.0477	.0322	.0492
13	Illinois	24.3036	16.1260	15.4707	12.1809	6.4373	14.9676	21.4777	23.0475
14	Indiana	7.0616	9.5156	4.0909	3.9073	2.6597	4.8364	6.2199	8.2922
15	Iowa	.9742	4.0936	4.1886	2.5919	1.4359	1.1009	.5872	.8273
16	Kansas (i)	.0282	.1414	.0943	.1225	.2509	.0809	.1297	.1430
17	Kentucky	4.1005	4.7749	3.4764	3.7950	6.0930	11.4289	12.5367	8.8140
18	Louisiana (k)	.5244	.3257	.6921	1.8219	1.5643	.9163	.9158	.9604
19	Maine (l)	.2595	.6327	.0844	.0509	.0617	.0427	.1631	.1589
20	Maryland (m)	2.0020	1.6348	3.8156	3.5802	3.2271	3.6410	2.7215	1.9798
21	Massachusetts	2.9745	3.5384	2.5499	2.3179	2.8065	2.9130	2.8417	2.9164
22	Michigan	.5723	.8632	.4634	.6284	.8183	.4439	.4295	.7618
23	Minnesota	.0499	.2658	.2502	.2854	.3053	.1745	.1377	.1350
24	Mississippi (n)	.....	.....	.0210	.0348	.1749	.1012	.1124	.1189
25	Missouri	1.6127	1.4971	3.3894	4.0227	5.1805	3.6541	3.3773	3.3373
26	Montana (o)	.....	.0333	.0442	.0537	.2274	.0486	.0375	.0770
27	Nebraska (p)	.0194	.0462	.0458	.0523	.1595	.0910	.0535	.2605
28	Nevada (q)	.0223	.0000	.0376	.0402	.1163	.0605	.0486	.0454
29	New Hampshire (r)	.0568	.1112	.0903	.0890	.1735	.0644	.0622	.0859
30	New Jersey	1.5647	2.4490	1.2497	1.8364	1.2053	.4914	.7988	.8338
31	New Mexico (s)	.0186	.0407	.0515	.0683	.1367	.0385	.0336	.0354
32	New York	21.0493	18.4821	18.5678	18.6342	17.9049	14.8749	9.4561	8.8213
33	North Carolina	.....	.....	.2289	.0945	1.5004	.2763	.3248	.7366
34	Ohio	21.9722	16.9561	23.0217	18.0487	13.9454	20.5888	21.6965	21.4950
35	Oregon (t)	.0561	.0615	.0655	.0709	.2093	.0509	.0608	.0517
36	Pennsylvania	7.8571	11.3719	9.8227	9.7088	11.1815	10.1407	7.4058	6.3885
37	Rhode Island (u)	.0483	.2149	.3306	.2848	.4412	.0709	.1357	.0838
38	South Carolina	.....	.....	.0760	.1668	.3446	.1035	.1059	.1129
39	Tennessee	.0563	.6088	1.1518	1.0582	2.0027	1.1763	1.0949	.9907
40	Texas	.....	.....	.1544	.2701	.4607	.1685	.1530	.2241
41	Utah (v)	.0137	.0056	.0416	.0613	.0575	.0276	.0162	.0275
42	Vermont (w)	.0308	.0648	.0533	.0439	.0774	.0314	.0247	.0429
43	Virginia	.0426	.0988	.5086	1.8810	1.9788	1.5049	1.3746	1.2885
44	Washington (x)	.0086	.0529	.0167	.0669	.1701	.0586	.0449	.0382
45	West Virginia	.0462	.2321	.1793	.3418	.6309	.3270	.5417	.3227
46	Wisconsin	1.0996	1.7394	2.0231	1.7369	1.3495	1.4184	1.5417	1.5729
47	Wyoming (y)	.....	.....	.....	.....	.....	.0019	.0168	.0099
	Total	100.0000	100.0000	100.0000	100.0000	100.0000	100.0000	100.0000	100.0000

[For notes to references on this page see page 41.]

SEVERAL GENERAL SOURCES OF INTERNAL REVENUE NOW TAXABLE, INCLUDING PENAL- RECEIPTS FROM THE SAME SOURCES, BY FISCAL YEARS, FROM JULY 1, 1863, TO JUNE

tax are not given in Table C in reports since 1880, except those of banks and bankers. They are to 1883.]

SPIRITS.											
Fiscal year ended June 30—											
1872.	1873.	1874.	1875.	1876.	1877.	1878.	1879.	1880.	1881.	1882.	
.1477	.1505	.1429	.1116	.0980	.1096	.1367	.1273	.1104	.1035	.0738	1
.0204	.0166	.0122	.0121	.0123	.0170	.0250	.0277	.0270	.0337	.0393	2
.1128	.1100	.0743	.0666	.0821	.0998	.1675	.1445	.1287	.1203	.0757	3
2.0915	2.1665	2.7844	3.0791	2.0027	1.8635	.9497	1.0547	1.0768	2.9089	3.2404	4
.0295	.0613	.0561	.0320	.0464	.0508	.0597	.0863	.1051	.1195	.1330	5
.7118	.7563	.5618	.5545	.4743	.5618	.5361	.4594	.2727	.3778	.2749	6
.0073	.0082	.0139	.0100	.0098	.0226	.0329	.0339	.0312	.0322	.0373	7
.0251	.0769	.0291	.0309	.0551	.0432	.0505	.0505	.0608	.0388	.0615	8
.0776	.0724	.0679	.0634	.0612	.0043	.....	.....	.....	.....	.....	9
.0390	.0481	.0333	.0308	.0229	.0230	.0283	.0245	.0191	.0189	.0166	10
.3217	.2783	.3078	.2908	.2709	.2258	.4091	.3526	.3131	.3481	.3409	11
.0354	.0291	.0307	.0287	.0235	.0232	.0315	.0327	.0279	.0294	.0326	12
25.1264	26.3492	25.1029	27.0947	35.1278	31.7051	31.8768	30.5348	32.0162	32.8074	34.2737	13
9.4309	9.7798	8.6110	7.5954	8.7781	9.4964	10.1711	10.0538	9.0472	9.7603	8.0641	14
.9809	.9539	.6791	.6043	.8007	.2701	.6314	.4664	.3753	.3690	1.5235	15
.1123	.1372	.0973	.0700	.0608	.0617	.0758	.0818	.1434	.0895	.0910	16
7.6181	7.0252	10.3248	13.4511	9.6207	12.8341	9.6517	10.3830	11.2456	10.1413	11.9181	17
1.3060	1.4082	1.1812	.4294	.1841	.2055	.5909	.270	.2347	.2092	.3333	18
.1572	.1557	.0752	.0394	.0269	.0173	.0302	.0409	.0296	.0774	.0361	19
2.7317	2.0814	2.1749	2.5126	1.6853	1.9112	1.4542	1.4108	1.3485	1.0885	1.2773	20
4.5278	3.2143	3.3924	2.9624	2.6745	2.3704	2.0989	2.2348	2.1195	1.9603	1.8302	21
.5954	.7554	.5402	.5165	.4316	.3085	.2589	.2261	.1903	.1901	.1852	22
.1258	.1327	.1234	.1153	.1118	.0959	.1151	.1173	.1368	.1099	.1241	23
.1165	.1331	.1155	.0899	.0772	.0721	.0854	.0738	.0701	.0703	.0585	24
3.5495	3.6976	3.9069	3.4068	.6063	3.0860	4.5296	4.0825	3.5176	3.3457	3.5949	25
.0271	.0278	.0370	.0261	.0218	.0218	.0310	.0329	.0297	.0354	.0513	26
.3049	.3661	.4457	.4246	.7647	.9231	1.2196	1.4902	1.3057	1.2549	1.3813	27
.0546	.0565	.0577	.0546	.0570	.0471	.0561	.0508	.0440	.0363	.0302	28
.1093	.1520	.1522	.1677	.1316	.1161	.1292	.1078	.1028	.0920	.0843	29
.8943	1.4841	.5930	.8735	.3999	.7670	.6680	.6570	.4699	.7282	.7822	30
.0284	.0306	.0244	.0312	.0282	.0224	.0260	.0276	.0401	.0538	.0582	31
9.0375	7.7907	6.5929	6.2212	5.6222	5.1041	6.0754	6.2028	4.9211	4.8453	3.6129	32
.2160	.5543	.4054	.3869	.3797	.4941	.5194	.5415	.8008	.9191	.7476	33
20.4975	20.8976	21.7276	19.1211	21.0766	18.8163	20.0853	21.4000	21.8012	21.3817	19.0571	34
.0470	.0480	.0441	.0399	.0344	.0384	.0467	.0492	.0442	.0453	.0454	35
4.6317	4.2686	4.1073	3.6425	2.7252	3.4286	3.1383	2.9012	3.0336	3.0851	3.3347	36
.1625	.1446	.1252	.0559	.0599	.0704	.0775	.0721	.0639	.0596	.0519	37
.1417	.1591	.0948	.1059	.0872	.0913	.1261	.1126	.1070	.0950	.0742	38
.9021	.9100	1.0018	1.2901	.7806	1.2045	1.2689	1.3545	1.3421	1.4240	1.1106	39
.2817	.3147	.2700	.2145	.1838	.1675	.2105	.2045	.1402	.1324	.1147	40
.0171	.0338	.0460	.0263	.0205	.0180	.0443	.0214	.0183	.0107	.0173	41
.0402	.0366	.0302	.0245	.0208	.0204	.0233	.0250	.0221	.0190	.0176	42
.7790	1.2200	1.0027	.9746	.4807	.6675	.6001	.5091	.5634	.4557	.4789	43
.0188	.0119	.0162	.0137	.0129	.0120	.0138	.0139	.0123	.0145	.0170	44
.2050	.2541	.4620	.4445	.3107	.3135	.0789	.0842	.0954	.1650	.1907	45
1.5928	1.6282	2.3114	2.6302	2.8413	2.1639	1.5527	1.7619	1.3988	1.3200	1.0686	46
.0065	.0119	.0132	.0122	.0153	.0131	.0148	.0116	.0108	.0104	.0113	47
100.0000	100.0000	100.0000	100.0000	100.0000	100.0000	100.0000	100.0000	100.0000	100.0000	100.0000	

C.—COMPARATIVE TABLE SHOWING THE

	STATES AND TERRITORIES.	SPIRITS. Fiscal year ended June 30—						
		1883.	1884.	1885.	1886.	1887.	1888.	1889.
1	Alabama	.0731	.0755	.0672	.0629	.0456	.0388	.040
2	Arizona	.0350	.0026					
3	Arkansas	.0783	.0738	.0874	.0906	.0906	.1045	.11
4	California	2.9916	2.8932	2.8167	1.5117	1.4286	1.4627	1.1
5	Colorado	.0992	.0898	.0950	.0913	.1119	.1102	.0
6	Connecticut	.2089	.2295	.2634	.3149	.2935	.3241	.2
7	Dakota	.0483	.0039					
8	Delaware	.0277	.0343	.0660	.0347	.0473		
9	District of Columbia							
10	Florida	.0145	.0105	.0141	.0155	.0154	.0184	.0
11	Georgia	.3788	.4164	.3828	.3573	.3947	.4580	.4
12	Idaho	.0350	.0019					
13	Illinois	29.8029	27.3028	30.4340	30.7068	32.8357	38.4340	36.
14	Indiana	6.5587	6.6239	5.1903	6.2607	5.4489	4.8989	6.
15	Iowa	4.5050	2.9739	2.7219	3.0954	2.3574	.2040	.
16	Kansas	.0929	.0841	.0998	.1375	.0872	.0508	.
17	Kentucky	17.8193	22.2241	19.7218	20.3207	16.1354	17.8102	20.
18	Louisiana	.1973	.1930	.2081	.2071	.1892	.2234	.
19	Maine	.0362	.0344	.0356	.0384	.0276		
20	Maryland	2.0844	2.4752	2.1535	1.5402	2.0766	2.1177	2.
21	Massachusetts	1.7856	1.5798	1.5892	1.3836	1.6105	1.7314	1.
22	Michigan	.1906	.2083	.2323	.2440	.2581	.2161	.
23	Minnesota	.1346	.1400	.1565	.1616	.1533	.1123	.
24	Mississippi	.0424	.0414	.0434	.0371	.0320		
25	Missouri	4.0068	4.0219	3.9816	4.3696	4.8819	4.0563	
26	Montana	.0501	.0938	.0780	.0739	.0808	.0882	
27	Nebraska	1.8875	1.7747	2.0604	2.1235	3.2539	3.6342	
28	Nevada	.0275	.0017	.0376	.0350	.0375		
29	New Hampshire	.0883	.0850	.0903	.0729	.0871	.1077	
30	New Jersey	.7359	.6079	.9837	.6983	1.1913	.8416	
31	New Mexico	.0549	.0686	.0760	.0693	.0692	.0619	
32	New York	3.3728	3.4255	3.8456	3.6898	3.9435	3.7706	
33	North Carolina	.7340	.7514	.8357	.7010	.7373	.7861	
34	Ohio	15.0115	13.1851	13.3825	13.5257	14.3611	11.5085	
35	Oregon	.0516	.0793	.0791	.0705	.0881	.0978	
36	Pennsylvania	3.7386	4.3209	4.1452	4.2533	3.9235	3.7114	
37	Rhode Island	.0513	.0492	.0565	.0536	.0526		
38	South Carolina	.0907	.0821	.0917	.0908	.0934	.0982	
39	Tennessee	1.3532	1.4657	1.3710	1.2722	1.2684	1.1552	
40	Texas	.1400	.1371	.1357	.1348	.1344	.1233	
41	Utah	.0179	.0009					
42	Vermont	.0152	.0165	.0177	.0190	.0178		
43	Virginia	.3501	.4211	.4548	.4511	.4267	.3656	
44	Washington	.0217	.0023					
45	West Virginia	.2703	.4047	.4127	.3451	.3260	.271	
46	Wisconsin	.9973	1.1959	1.4151	1.3786	1.3860	1.01	
47	Wyoming	.0096	.0004					
	Total	100.0000	100.0000	100.0000	100.0000	100.0000	100.	

PERCENTAGES OF RECEIPTS, ETC.—Continued.

TOBACCO.											
Fiscal year ended June 30—											
1864.	1865.	1866.	1867.	1868.	1869.	1870.	1871.	1872.	1873.	1874.	
.....	.....	.0128	.2225	.3472	.1104	.0675	.0602	.2275	.1894	.0618	1
.....	.....	....	.0005	.0001	.0019	.0019	.0027	.0041	.0070	.0092	2
.....	.....	.0002	.0081	.0038	.0320	.0500	.0613	.0700	.0751	.0800	3
.5109	1.0594	4.0884	4.6071	4.6263	3.8890	3.1393	3.1928	2.9850	2.0050	1.7099	4
.0002	.0001	.0001	.0316	.0420	.0109	.0188	.0097	.0144	.0255	.0326	5
.5096	.6836	.7895	.7108	.5939	.6900	.5682	.4771	.4653	.4771	.4624	6
.....	.....	.....	.....	.0007	.0029	.0019	.0024	.0025	.0043	.0064	7
.8173	.6711	1.3358	1.0713	.9828	.4652	.7911	.8303	.9549	1.0436	.9866	8
.0449	.0703	.0628	.0538	.0542	.0896	.0719	.0774	.0873	.0955	.0973	9
.....	.....	.....	.0008	.0022	.0361	.1477	.1781	.2151	.3601	.3498	10
.....	.....	.0146	.3031	1.1343	.6428	.8709	.6953	.6342	.7124	.5210	11
.....	.....	.0006	.0001	.....	.0084	.0182	.0050	.0040	.0058	.0046	12
3.7028	3.5441	5.2410	5.8924	5.7042	6.2387	6.2180	6.8321	5.9107	5.7066	6.6506	13
1.6057	1.3212	1.1753	.7781	.9173	1.2257	.8505	.8889	.9434	.9162	.9355	14
.2142	.5899	.2801	.3628	.4998	.9719	.7806	.7128	.8273	.8767	1.0835	15
.0089	.0157	.0365	.0583	.0386	.0771	.0781	.0996	.1147	.1163	.1427	16
18.3743	8.8958	7.7879	7.0627	5.8296	4.6136	4.0269	4.4321	4.4296	4.3641	4.7347	17
.2321	.7060	.8775	1.9817	1.4123	1.9054	3.2019	2.5712	1.8661	1.8145	.9396	18
.1916	.1247	.0970	.3594	.4370	.1430	.0960	.0901	.0686	.1291	.1378	19
5.2294	5.0498	3.9395	4.7472	4.1902	4.2645	4.9643	4.5098	4.5953	3.2560	2.9826	20
1.9470	1.7721	2.1918	2.8002	2.5457	2.2924	1.7308	1.6635	1.6478	1.5632	1.5892	21
4.0904	4.4778	4.3478	4.2057	4.4359	4.5090	4.4012	4.1962	4.7161	4.0878	3.7278	22
.0087	.0162	.0406	.0404	.0305	.1029	.1216	.0860	.0880	.1114	.1801	23
.....	.....	.....	.0001	.....	.0224	.0523	.0563	.0514	.0783	.0720	24
15.9464	11.7129	10.8390	8.8943	8.5094	6.9828	5.9777	6.2747	5.8741	4.9526	5.2722	25
.....	.....	.....	.0001	.....	.0072	.0354	.0122	.0005	.0069	.0091	26
.....	.0031	.0033	.0029	.0103	.0326	.0441	.0408	.0451	.0631	.0716	27
.0035	.0036	.0043	.0019	.0002	.0191	.0259	.0104	.0132	.0141	.0151	28
.0705	.0871	.0888	.0702	.0620	.0827	.0629	.0688	.0682	.1163	.1020	29
1.3427	2.1344	2.0771	1.9178	1.8497	1.9151	1.6248	1.6606	1.8519	2.0995	2.2807	30
.....	.....	.....	.....	.0067	.0122	.0111	.0101	.0085	.0118	.0117	31
25.2422	29.6279	31.0267	30.3183	30.1435	27.8634	25.2702	25.6257	26.4263	23.9857	23.4429	32
.....	.....	.0162	.1275	1.4088	1.4308	3.1384	2.5658	2.7820	3.1870	3.6554	33
9.7261	12.1760	10.5294	9.7310	9.9034	9.3570	7.5297	7.5762	8.0232	7.9826	9.1245	34
.0087	.0116	.0060	.0894	.1859	.1813	.0898	.0513	.1343	.0838	.0211	35
7.8318	12.9570	9.8709	9.7364	8.7326	10.1603	8.1595	8.3409	8.3614	7.6403	7.4360	36
.2683	.3101	.2481	.2698	.1862	.2132	.1026	.1688	.1817	.1883	.1838	37
.....	.....	.0235	.0183	.0710	.0916	.0788	.0696	.0829	.1105	.1123	38
.0551	.1889	.0519	.2406	.5613	.3089	.2625	.2737	.3549	.2737	.3520	39
.....	.....	.0090	.0245	.1084	.0719	.1006	.1061	.1457	.1650	.1996	40
.....	.....	.0021	.....	.0146	.0107	.0136	.0049	.0054	.0120	.0183	41
.0257	.0359	.0220	.0236	.0143	.0457	.0367	.0393	.0539	.0700	.0790	42
.0731	.1100	1.4513	1.5098	2.2688	6.5124	12.9765	12.9959	11.7974	19.0978	17.1568	43
.0003	.0012	.0010	.0014	.0011	.0043	.0066	.0046	.0089	.0058	.0080	44
.6265	.4708	.4507	.3936	.5438	.6433	.0365	.0977	.8178	.7857	.7824	45
1.0811	1.1327	.9553	1.3109	1.5898	1.6980	1.4682	1.5787	2.0012	1.7253	2.2435	46
.....	.....	.....	.....	.....	.0007	.0057	.0028	.0022	.0037	.0043	47
100.0000	100.0000	100.0000	100.0000	100.0000	100.0000	100.0000	100.0000	100.0000	100.0000	100.0000	

C.—COMPARATIVE TABLE SHOWING THE

	STATES AND TERRITORIES.	TOBACCO.								
		Fiscal year ended June 30—								
		1875.	1876.	1877.	1878.	1879.	1880.	1881.	1882.	1883.
1	Alabama	.0769	.0799	.0699	.0790	.0794	.0919	.0963	.0910	.0882
2	Arizona	.0080	.0099	.0105	.0129	.0166	.0174	.0159	.0137	.0092
3	Arkansas	.0970	.0469	.0499	.0665	.0860	.1074	.1043	.1094	.0722
4	California	1.8644	2.0808	1.8596	1.9119	1.8630	1.9324	2.0873	2.3062	2.3483
5	Colorado	.0310	.0324	.0390	.0443	.0539	.0739	.0794	.0783	.0594
6	Connecticut	.4466	.4289	.3848	.3900	.3814	.4434	.4321	.4352	.4378
7	Dakota	.0050	.0057	.0101	.0140	.0182	.0279	.0293	.0338	.0368
8	Delaware	.8833	.9362	1.0442	1.0944	.8348	.6407	.6129	.6032	.6013
9	District of Columbia	.0903	.0887	.0174						
10	Florida	.4458	.3992	.3649	.4174	.4630	.4920	.5562	.5494	.5412
11	Georgia	.4512	.3846	.2333	.1546	.1720	.1908	.1771	.1520	.1209
12	Idaho	.0046	.0038	.0030	.0035	.0049	.0052	.0066	.0065	.0067
13	Illinois	7.0311	7.4279	6.8598	7.0583	6.6178	6.4142	6.1881	6.0525	6.0139
14	Indiana	.9648	.8937	.7419	.7733	.7451	.8524	.8448	.8295	.7480
15	Iowa	1.1965	1.1615	1.0113	.9087	.7887	.7675	.7273	.7429	.7195
16	Kansas	.1298	.1308	.1345	.1625	.1957	.2575	.2617	.2651	.2540
17	Kentucky	4.6285	5.0386	4.6543	4.3553	4.7119	4.3415	3.7012	3.8638	4.2646
18	Louisiana	.7532	.8397	1.0413	.9314	.9254	1.0838	1.2332	1.2274	1.1911
19	Maine	.1218	.1114	.1093	.1156	.1178	.1338	.1197	.1081	.0895
20	Maryland	3.1480	3.4035	3.1888	3.2137	3.0420	3.1404	3.2656	3.2248	3.4265
21	Massachusetts	1.4804	1.5970	1.6826	1.7308	1.5558	1.5682	1.3755	1.3996	1.3031
22	Michigan	3.7099	3.7848	3.2736	2.9793	3.0269	2.8795	2.9683	3.0531	3.0899
23	Minnesota	.1432	.1537	.1506	.1918	.2152	.2787	.2988	.3366	.3586
24	Mississippi	.0605	.0524	.0519	.0563	.0565	.0719	.0664	.0599	.0373
25	Missouri	5.4065	4.7689	4.6540	4.8758	5.2847	6.1550	7.4068	7.8024	8.1616
26	Montana	.0072	.0060	.0059	.0076	.0078	.0096	.0110	.0154	.0153
27	Nebraska	.0820	.0892	.0895	.1041	.1262	.1516	.1317	.1289	.1268
28	Nevada	.0143	.0159	.0137	.0147	.0156	.0159	.0129	.0106	.0067
29	New Hampshire	.1035	.0767	.0772	.0762	.0701	.0815	.0791	.0655	.0629
30	New Jersey	3.5414	7.3686	9.6475	10.4912	9.3454	8.3892	8.6824	8.6639	9.5196
31	New Mexico	.0099	.0085	.0073	.0067	.0079	.0133	.0186	.0194	.0153
32	New York	20.4801	17.6930	17.3993	18.6653	18.7889	19.9762	20.0071	20.5446	21.0308
33	North Carolina	3.7349	3.5810	3.6060	3.8282	5.2261	4.7325	4.2969	4.9088	4.3943
34	Ohio	9.3436	8.9790	8.7464	8.6714	8.5771	8.3132	8.1342	7.0311	6.6504
35	Oregon	.0102	.0208	.0224	.0270	.0319	.0379	.0350	.0347	.0321
36	Pennsylvania	6.8674	6.8850	6.5463	7.0033	7.3831	8.5482	8.7535	8.9584	9.0294
37	Rhode Island	.1639	.1476	.1399	.1578	.1524	.1577	.1499	.1354	.1257
38	South Carolina	.1169	.0994	.0941	.1010	.0865	.0899	.1006	.0909	.0666
39	Tennessee	.3716	.2770	.3985	.3743	.3602	.3331	.3201	.3551	.3182
40	Texas	.1645	.1679	.1818	.1926	.2036	.2155	.2046	.1875	.1557
41	Utah	.0150	.0149	.0139	.0150	.0160	.0155	.0142	.0140	.0111
42	Vermont	.0676	.0574	.0515	.0582	.0546	.0592	.0598	.0577	.0573
43	Virginia	18.8712	17.4672	18.1625	15.3284	15.2284	13.8056	13.2108	12.2370	11.2586
44	Washington	.0061	.0064	.0074	.0079	.0083	.0103	.0129	.0118	.0098
45	West Virginia	.6089	.5048	.5594	.5822	.5635	.6434	.6438	.6161	.6343
46	Wisconsin	2.2284	2.6663	2.5846	2.7411	2.4853	2.4228	2.4516	2.4706	2.6114
47	Wyoming	.0041	.0055	.0045	.0045	.0044	.0045	.0046	.0047	.0032
	Total	100.0000	100.0000	100.0000	100.0000	100.0000	100.0000	100.0000	100.0000	100.0000

PERCENTAGES OF RECEIPTS, ETC.—Continued.

TOBACCO.						FERMENTED LIQUORS.					
Fiscal year ended June 30—						Fiscal year ended June 30—					
1884.	1885.	1886.	1887.	1888.	1889.	1864.	1865.	1866.	1867.	1868.	
.0922	.0859	.1059	.1081	.1153	.1124	.....	.....	.0097	.0130	.0152	1
.0010	.....	.....	.....	.....	.....	.....	.....	.....	.0027	.0106	2
.1055	.0966	.1073	.1006	.0997	.1010	.....	.....	.0108	.0038	.0099	3
2.3519	2.1184	1.8399	1.7786	1.7576	1.5789	2.4532	2.2458	1.8147	2.6254	2.9949	4
.0910	.1086	.1240	.1015	.1733	.1692	.0478	.0478	.0369	.0497	.0616	5
.4352	.4108	.4194	.4113	.5296	.4956	.5145	.6590	.5167	.6770	.6441	6
.0057	.....	.....	.....	.....	.....	.....	.....	.....	.0003	.0129	7
.6371	.6823	.7144	.6748	.....	.....	.0303	.0358	.0258	.0417	.0758	8
.....	.....	.....	.....	.....	.....	.4833	.5207	.4049	.8495	.3212	9
.6516	.7889	.8095	1.0353	1.1068	1.2945	.....	.....	.....	.....	.....	10
.1630	.1476	.1535	.1981	.1656	.1397	.....	.....	.0409	.0483	.0327	11
.0005	.....	.....	.....	.....	.....	.....	.....	.0453	.0450	.0557	12
5.4142	4.9481	4.8066	4.4084	4.1589	3.9463	7.0485	7.4385	8.2349	8.4291	8.7149	13
.7230	.6793	.6343	.6515	.6729	.6876	2.1337	2.8502	2.5099	2.3226	2.5299	14
.7685	.7870	.7254	.6803	.6948	.6612	.9363	1.1672	1.4000	1.7042	1.9204	15
.2858	.3090	.3134	.3407	.3285	.2856	.1795	.2480	.2395	.3134	.3476	16
4.7911	4.8561	5.1872	5.0113	4.9817	4.8521	1.3519	1.7420	1.7786	1.5272	1.4174	17
1.1036	1.1643	1.0609	.9937	1.0572	1.0211	1.1315	.6698	.6268	.4863	.7234	18
.1051	.1041	.1011	.0935	.....	.....	.0715	.0556	.0896	.0900	.0520	19
3.2874	3.4044	3.4007	3.3218	4.3141	4.3392	2.9060	2.6478	2.2459	2.2010	2.4255	20
1.3805	1.3977	1.4437	1.3266	1.2299	1.1351	4.2957	4.0001	7.3731	4.5593	4.6912	21
3.3224	3.7508	3.8497	3.7969	3.5685	4.0061	1.7011	2.5029	2.1438	2.3440	2.3903	22
.4093	.4299	.4406	.4235	.4138	.4497	.3588	.4217	.5722	.7893	.8386	23
.0555	.0546	.0559	.0541	.....	.....	.....	.....	.0005	.0079	.0075	24
8.8198	9.5023	10.4226	10.9535	11.7842	12.1482	5.0724	5.9512	5.2305	4.5699	4.3061	25
.0428	.0273	.0285	.0208	.0486	.0591	.....	.0222	.0440	.0443	.0640	26
.2093	.2337	.2563	.2817	.2950	.3058	.0578	.0692	.0673	.0926	.1591	27
.0005	.0197	.0198	.0194	.....	.....	.2241	.1754	.0830	.1170	.1606	28
.0745	.0672	.0650	.0608	.2018	.1926	.9787	.9617	.8405	1.2067	1.0268	29
7.9921	7.9305	8.8008	8.8327	7.3238	7.7247	5.8708	5.8872	5.8727	6.465	6.4367	30
.0240	.0280	.0209	.0188	.0193	.0214	.0101	.0130	.0076	.0132	.0110	31
19.9776	19.4629	18.7459	17.6281	17.3143	16.5206	34.5749	31.1096	30.2904	30.7275	29.6859	32
4.5035	4.2211	4.4850	4.8320	5.3167	5.8530	.....	.....	.0011	.0008	.0031	33
6.7177	7.8329	6.7929	8.3760	7.6810	7.2412	9.5626	9.7297	10.1165	9.0690	10.0553	34
.0615	.0568	.0579	.0610	.0838	.1235	.0821	.0601	.1036	.1022	.1353	35
9.9986	10.0636	10.3343	10.7450	11.0228	10.7386	13.7961	14.3874	13.0480	14.2698	12.6797	36
.1391	.1342	.1451	.1302	.....	.....	.2802	.2350	.2124	.1978	.1870	37
.0761	.0729	.0758	.0736	.0690	.0621	.....	.....	.0001	.0136	.0213	38
.3891	.3864	.3998	.4267	.5077	.5720	.1099	.6529	.4261	.2411	.2235	39
.1985	.1898	.1826	.1351	.1805	.1853	.....	.....	.1186	.1693	.1000	40
.0010	.....	.....	.....	.....	.....	.0075	.0148	.0119	.0208	.0197	41
.0629	.0607	.0582	.0541	.....	.....	.0493	.0562	.0439	.0524	.0599	42
11.0480	10.2655	9.4344	8.6327	9.6164	9.4346	.1087	.0934	.0871	.1188	.1585	43
.0015	.....	.....	.....	.....	.....	.0349	.0521	.0311	.0458	.0392	44
.7157	.7564	.7271	.7673	.9095	1.2191	.0600	.5111	.4818	.4132	.2880	45
2.7049	2.8078	2.6537	2.3209	2.2574	2.2929	2.9263	2.7639	2.7613	3.4682	3.7745	46
.0002	.....	.....	.....	.....	.....	.....	.....	.....	.....	.....	47
100.0000	100.0000	100.0000	100.0000	100.0000	100.0000	100.0000	100.0000	100.0000	100.0000	100.0000	

C —COMPARATIVE TABLE SHOWING THE

	STATES AND TERRITORIES.	FERMENTED LIQUORS.							
		Fiscal year ended June 30—							
		1869.	1870.	1871.	1872.	1873.	1874.	1875.	1876.
1	Alabama	.0119	.0151	.0118	.0156	.0124	.0133	.0082	.0126
2	Arizona	.0006	.0100	.0058	.0150	.0126	.0096	.0102	.0116
3	Arkansas	.0040	.0042	.0013	.0015	.0068	.0034	.0036	.0059
4	California	2.9072	3.2009	2.7638	2.4613	2.4330	2.8739	3.5066	3.7074
5	Colorado	.0500	.0784	.1137	.1325	.1867	.2445	.2862	.2849
6	Connecticut	.6599	.7229	.7248	.7201	.6186	.6389	.6356	.7164
7	Dakota	.0182	.0063	.0156	.0140	.0163	.0233	.0264	.0360
8	Delaware	.0868	.0630	.0503	.0510	.0739	.0720	.0650	.0705
9	District of Columbia	.2614	.2115	.1897	.1938	.2257	.2973	.2550	.2975
10	Florida	.....	.....	.0019	.0015	.0040	.0021	.0012	.0031
11	Georgia	.0819	.0814	.0884	.0697	.0820	.0717	.0737	.0708
12	Idaho	.0466	.0328	.0297	.0199	.0180	.0146	.0153	.0149
13	Illinois	7.8326	7.1245	6.5445	6.2241	5.8131	6.1604	6.0784	6.0188
14	Indiana	2.2955	2.1476	2.1328	2.0549	2.0303	2.0236	2.1148	2.0396
15	Iowa	2.0362	1.8071	1.5994	1.5033	1.7016	1.9959	2.2002	2.1418
16	Kansas	.3390	.3489	.3681	.3320	.3262	.3449	.3032	.2831
17	Kentucky	1.1452	1.1156	1.2062	1.2714	1.2762	1.3456	1.3164	1.1847
18	Louisiana	.6482	.7905	.7492	.6009	.5393	.4738	.3353	.3025
19	Maine	.1022	.0670	.1230	.0908	.1009	.1540	.1507	.1313
20	Maryland	2.2171	2.1249	2.1691	2.1579	2.2404	2.2688	2.1762	2.0970
21	Massachusetts	4.8757	5.0223	7.1543	7.0265	6.8523	5.8764	5.4839	5.3135
22	Michigan	2.4601	2.2326	2.0736	2.1519	2.4040	2.3030	2.2919	2.3788
23	Minnesota	.8366	1.0433	.9375	.9388	1.0207	1.0796	1.0829	1.1055
24	Mississippi	.0022	.0075	.0112	.0115	.0190	.0150	.0103	.0075
25	Missouri	4.0149	4.1088	4.4968	4.5744	4.4362	4.4913	4.4409	4.4570
26	Montana	.0525	.0819	.0719	.0443	.0457	.0593	.0605	.0550
27	Nebraska	.2155	.2546	.2150	.2204	.2435	.2805	.2756	.2971
28	Nevada	.1448	.1573	.1590	.1606	.1711	.1538	.1678	.1848
29	New Hampshire	1.3159	1.2261	1.0223	1.2455	1.3387	1.2208	1.5561	1.4724
30	New Jersey	6.8817	6.9512	7.0039	6.9438	6.4960	6.0906	5.5173	5.5875
31	New Mexico	.0236	.0214	.0141	.0128	.0156	.0140	.0207	.0166
32	New York	31.7290	32.1130	31.6556	31.9670	32.0427	32.1255	32.5258	32.6437
33	North Carolina	.0023	.0035	.0011	.0006	.0034	.0032	.0073	.0058
34	Ohio	9.4274	9.4019	9.1980	9.0471	9.3461	9.4603	9.4948	9.4000
35	Oregon	.1283	.1382	.1076	.1003	.0959	.0987	.1057	.1189
36	Pennsylvania	12.7926	12.9541	12.8512	12.6137	12.4029	12.0378	11.0199	11.1618
37	Rhode Island	.1611	.2071	.1833	.2193	.2221	.2864	.2647	.3143
38	South Carolina	.0166	.0251	.0215	.0243	.0285	.0292	.0267	.0200
39	Tennessee	.1436	.1544	.1036	.0861	.0907	.0640	.0395	.0275
40	Texas	.1243	.1396	.1458	.2234	.2158	.2233	.2436	.2699
41	Utah	.0401	.0282	.0241	.0432	.0921	.1029	.1012	.1031
42	Vermont	.0449	.0348	.0258	.0411	.0387	.0354	.0314	.0250
43	Virginia	.1614	.1400	.1116	.1366	.1336	.1278	.1777	.1923
44	Washington	.0388	.0433	.0546	.0652	.0643	.0692	.0758	.0918
45	West Virginia	.2625	.2459	.2369	.2685	.2732	.2703	.3092	.2864
46	Wisconsin	3.3487	3.2898	3.2177	3.7945	4.1051	4.7143	5.0463	4.9211
47	Wyoming	.0044	.0218	.0129	.0174	.0241	.0268	.0393	.0423
	Total	100.0000	100.0000	100.0000	100.0000	100.0000	100.0000	100.0000	100.0000

PERCENTAGES OF RECEIPTS, ETC.—Continued.

FERMENTED LIQUORS.											
Fiscal year ended June 30—											
1877.	1878.	1879.	1880.	1881.	1882.	1883.	1884.	1885.	1886.	1887.	
.0074	.0042	.0041	.0052	.0054	.0049	.0059	.0056	.0151	.0410	.0665	1
.0128	.0201	.0224	.0215	.0433	.0367	.0282	.0024	....	....	....	2
.0046	.0033	.0055	.0050	.0047	.0038	.0068	.0045	.0050	.0050	.0052	3
3.9125	3.6880	3.5064	2.9106	2.9554	2.6171	2.6488	2.6433	2.6705	2.5726	2.5891	4
.2401	.2509	.3367	.4545	.5260	.5409	.5557	.5688	.5535	.5263	.5621	5
.7121	.6023	.5585	.5698	.5630	.6668	.7291	.7402	.6891	.6448	.6780	6
.0445	.0634	.0616	.0596	.0742	.1192	.1718	.0286	....	....	....	7
.0803	.0811	.0706	.0784	.0873	.0870	.0913	.0992	.1067	.1074	.1286	8
.0914	....	....	....	....	....	....	....	....	....	....	9
.0024	.0044	.0026	.0046	.0112	.0135	.0083	.0036	.0040	.0033	.0026	10
.0914	.0724	.0970	.0992	.0604	.0383	.0741	.0753	.0637	.0598	.0180	11
.0142	.0185	.0182	.0234	.0199	.0286	.0300	.0052	....	....	....	12
5.7155	5.7520	5.7638	5.0784	6.1795	6.1762	6.0840	6.0844	6.2735	6.5466	7.2902	13
1.8237	1.8233	1.8021	1.9653	2.0134	1.9733	1.8831	1.8562	1.8904	1.8811	1.9025	14
1.8588	1.9422	1.8075	1.8505	1.8588	1.7562	1.5631	1.3986	.9404	.9946	.8595	15
.2768	.2862	.2821	.2739	.1915	.16.9	.1587	.1525	.1142	.1072	.0834	16
1.1279	1.2395	1.3541	1.3501	1.3474	1.3097	1.2335	1.2706	1.3005	1.2778	1.2485	17
.4161	.4114	.4381	.4271	.3738	.3316	.3167	.4503	.4792	.5665	.5361	18
.0847	.0214	.0231	.0141	.0185	.0195	.0167	.0129	.0095	.0117	.0083	19
2.3106	2.3003	2.1412	2.0034	2.0569	2.0559	2.0546	2.1332	2.2232	2.2764	2.4108	20
5.3784	5.2354	5.2006	5.0621	5.1504	4.9219	4.8442	4.5236	4.6026	4.6577	4.3336	21
2.2163	2.1277	2.1867	2.2331	2.1463	2.0004	1.9720	2.1525	2.0786	2.1531	2.1212	22
1.0797	1.1691	1.1395	1.1945	1.3200	1.3072	1.4299	1.5322	1.4916	1.5217	1.4791	23
.0091	.0102	.0130	.0133	.0139	.0151	.0193	.0214	.0200	.0222	.0173	24
4.9598	5.2093	5.4034	5.5469	5.7565	5.9580	5.8319	5.9455	5.8903	5.7313	6.0636	25
.0507	.0624	.0678	.0723	.0810	.0941	.1020	.2322	.1658	.1619	.1573	26
.2837	.3216	.3131	.3439	.3396	.3341	.3338	.5293	.6093	.6815	.7456	27
.1565	.1483	.1536	.1305	.1106	.0811	.0672	.0132	.1300	.1626	.1086	28
1.2907	1.2046	1.2068	1.3829	1.4249	1.4903	1.5200	1.6875	1.6579	1.5770	1.5674	29
5.3696	5.0014	4.8289	4.7884	4.6457	4.7568	4.7707	4.7369	4.9372	5.0622	5.2131	30
.0143	.0112	.0081	.0076	.0096	.0173	.0225	.0504	.0516	.0557	.0415	31
34.3457	34.3082	34.9503	33.9701	33.4033	32.8533	32.9821	32.6246	33.1998	33.1246	32.2632	32
.0054	.0049	.0049	.0064	.0063	.0084	.0114	.0102	.0093	.0088	.0073	33
8.9016	9.4138	9.2083	9.2075	9.0769	9.1982	9.0975	8.9679	8.7161	8.5060	8.6046	34
.1323	.1582	.1726	.1861	.2010	.1707	.1696	.2811	.2790	.2995	.3299	35
10.7606	10.0664	9.8708	10.1324	9.8783	10.3213	10.4161	10.5267	10.3758	10.2664	10.3008	36
.3433	.3707	.3933	.4183	.4141	.4222	.3937	.3082	.2906	.2710	.3081	37
.0144	.0130	.0073	.0257	.0635	.0612	.0549	.0520	.0519	.0747	.0706	38
.0246	.1224	.0803	.0787	.0757	.0634	.0381	.0425	.0588	.1174	.1449	39
.2396	.1936	.1419	.1164	.0954	.0954	.0979	.1181	.1933	.2483	.2633	40
.1034	.0966	.1248	.1106	.1268	.1134	.1306	.0200	....	....	....	41
.0171	.0248	.0210	.0157	.0131	.0106	.0095	.0081	.0084	.0071	.0056	42
.1756	.1526	.1475	.1408	.1456	.1569	.1552	.1543	.1658	.1805	.1689	43
.0953	.0981	.0925	.0825	.1091	.1011	.1252	.0263	....	....	....	44
.2502	.2424	.2285	.2584	.2621	.2857	.2975	.3405	.3492	.3595	.4196	45
4.9084	4.8876	5.5039	6.3339	6.6007	7.1537	7.3835	7.5546	7.3196	7.1222	7.1193	46
.0549	.0486	.0460	.0444	.0491	.0361	.0333	.0048	....	....	....	47
100.0000	100.0000	100.0000	100.0000	100.0000	100.0000	100.0000	100.0000	100.0000	100.0000	100.0000	

C.—COMPARATIVE TABLE SHOWING THE

	STATES AND TERRITORIES.	FERMENTED LIQUORS.		OLEOMARGARINE.			PENALTIES, ETC., COLLECTED.		
		Fiscal year ended June 30—		Fiscal year ended June 30—			Fiscal year ended June 30—		
		1888.	1889.	1887.*	1888.	1889.	1884.	1885.	1886.
1	Alabama	.0669	.0807	.1847	.0701	.2896			.0449
2	Arizona								
3	Arkansas	.0036	.0068	.7181	.2245	.5101			.0382
4	California	2.7121	2.9911			.0027	3.9251	7.4982	9.9154
5	Colorado	.6146	.6857	2.0103	.8270	.4290	.3059	.0072	.1381
6	Connecticut	1.0870	1.0859	1.8125	17.6754	17.1792	.4248	.1587	.0998
7	Dakota								
8	Delaware			.0897			.0836	.0183	.0382
9	District of Columbia						.4621	.9943	.7229
10	Florida	.0016	.0025	.0594	.0371	.1382			
11	Georgia	.0318	.0727	.0956	.0764	.0116			.2089
12	Idaho								.0054
13	Illinois	7.7298	7.9945	36.7508	46.3817	45.3413	3.4123	8.3394	13.4068
14	Indiana	1.0430	1.9406	7.9317	9.6151	9.5953	1.5256	1.3213	1.0296
15	Iowa	.6881	.4398	.0365	.0435	.0288	.9368	.4897	.9646
16	Kansas	.0723	.0469	4.4992	4.7030	5.4745	.4797	.1122	.1153
17	Kentucky	1.2256	1.1689	1.0490	.7200	.5632	1.8385	1.9967	2.3233
18	Louisiana	.5183	.5919	.3013	.1991	.3511	3.0558	3.7546	.2758
19	Maine			.0674			.4187	.3479	.1706
20	Maryland	2.5586	2.6091	.2320	.1183	.1501	2.0091	9.7559	1.5851
21	Massachusetts	4.1156	3.9786	7.4158	4.8980	4.5333	10.0760	9.7172	11.3454
22	Michigan	2.1564	2.1061	2.9298	2.6878	2.6069	.8711	1.0736	.6496
23	Minnesota	1.2951	1.2950	.1175			.1368	.2485	.0542
24	Mississippi			.0149					
25	Missouri	6.2673	6.5820	1.0464	1.7018	1.3638	6.8003	5.4134	2.7233
26	Montana	.2870	.3125	.6205	.2828	.4867			.0087
27	Nebraska	.7192	.7352	.4052	.1016	.3441	.0135	.0041	.0573
28	Nevada			.1376			.1831	.5908	.3428
29	New Hampshire	1.3927	1.3597	.1849	.2877	.1548	.7016	.4052	.1318
30	New Jersey	5.3135	5.4033	.8646	.2386	.6750	1.2796	1.8691	1.8610
31	New Mexico	.0393	.0417	.4222	.1192	.0139	.0062	.0207	.0216
32	New York	32.0051	31.9026	6.9817	.2381	.0747	38.8768	28.1369	26.9055
33	North Carolina	.0068	.0053	.0061		.0022			.0279
34	Ohio	8.8427	8.3312	4.1033	5.4496	6.4927	4.3867	5.8484	8.4662
35	Oregon	.3590	.4666		.1338	.3221	.0040	.0183	.0179
36	Pennsylvania	10.0457	9.4263	4.8789	1.9387	1.4302	13.8350	9.0784	8.7662
37	Rhode Island			11.6411			.5548	.4240	.2517
38	South Carolina	.0526	.0422			.0009			.0477
39	Tennessee	.1615	.1940	.7050	.3263	.2746		1.0657	6.3317
40	Texas	.2844	.3041	.6155	.3467	.4521			.0479
41	Utah							.0435	.0733
42	Vermont						.4273	.0801	.0580
43	Virginia	.2034	.1925	.1007	.0285	.0886	.0275	.1187	.0917
44	Washington						.0072	.1096	.0205
45	West Virginia	.4185	.4071	.0431	.0106	.0309	.4075	.1029	.1117
46	Wisconsin	6.7814	7.1914	.9180	.5124	.5718	1.5650	.8362	.9857
47	Wyoming								
	Total	100.0000	100.0000	100.0000	100.0000	100.0000	100.0000	100.0000	100.0000

*Last eight months of fiscal year 1887.

PERCENTAGES OF RECEIPTS, ETC.—Continued.

PENALTIES, ETC., COLLECTED.											
Fiscal year ended June 30—											
1867.	1868.	1869.	1870.	1871.	1872.	1873.	1874.	1875.	1876.	1877.	
.3231	.1552	.1159	.1381	.3384	1.8211	.2894	.6922	1.5176	.6076	.4282	1
.0246	.0001	.0008	.0112	.0045	.1761	.0443	.0138	.0037	.....	.0274	2
.0413	.1764	.1210	.2109	.3178	.4743	.3759	.6732	.1888	.2719	.6704	3
5.4828	2.1767	1.5316	1.2008	2.0431	.9976	.4737	2.0223	1.6473	1.3088	.3105	4
.1246	.0886	.0590	.0581	.2022	.0192	.0198	.0878	.2574	.3519	.0247	5
.6659	.2633	.2197	.7289	.1689	.6715	.1511	.4443	.8009	.0909	.1410	6
.....	.0075	.0042	.1092	.0205	.0182	.0122	.0225	.0034	.0011	.0090	7
.0160	.0149	.0100	.0803	.7252	.3476	.3124	.0444	.2234	.2484	.2018	8
.0716	.0759	.4382	.1723	.2941	.1726	.3348	.0764	.4740	.1177	.0257	9
.0186	.0700	.0208	.1326	.0924	.0732	.2117	.0767	.1830	.1775	.....	10
.7968	.2943	.3338	.5362	.3655	.6591	6.7434	.9676	2.0498	1.1207	.5708	11
.0188	.1590	.1351	.....	.0324	.0133	.0049	.0742	.....	...	.0075	12
7.1979	9.8136	6.5668	14.6783	3.2970	6.1872	4.5964	7.5070	6.3385	6.0357	23.0553	13
.9073	.5715	7.5391	.7612	1.7649	3.5250	.6523	1.5381	2.1107	.9964	3.9568	14
.6427	.6368	1.8921	.6447	.5381	.1743	.5066	1.3220	6.7150	3.8915	2.0271	15
.0760	.0641	.1489	.1555	.2672	.1261	.1901	.3528	.4287	.2835	.0234	16
3.7210	2.8131	3.9784	8.4805	5.3081	4.0655	4.4066	2.8866	3.0759	5.0826	1.1014	17
1.0924	.9977	.4165	1.0822	.7480	1.1182	.0638	2.7496	1.4345	.2342	.2408	18
.1638	.5269	.1434	.1426	.1502	.1149	.5683	.1596	.4924	.1651	.0418	19
.6091	1.0387	1.5976	2.4456	4.8213	1.4924	4.4954	1.3832	3.0738	.9432	.3450	20
8.9277	7.3360	4.0222	9.5454	4.7908	2.9877	2.5443	1.5852	1.7226	1.6520	2.8686	21
2.9789	3.6980	2.5131	2.4328	1.7339	.2534	.1836	.1521	.2034	.4058	1.5419	22
.2298	.1116	.2081	.3315	.1026	.1688	.1117	.4044	.2729	.3687	.7245	23
.00 0	.0277	.1426	.0592	.2779	1.6942	.9792	.5816	2.2790	1.6167	.5632	24
3.0183	5.7907	7.1265	3.8024	3.1486	2.8573	2.9358	1.5241	3.2878	10.8133	12.0153	25
.0134	.0010	.....	.0241	.0359	.0362	.0174	.3798	.3467	.0419	.0641	26
.0087	.0434	.0775	.1054	.0309	.0154	.0837	.4312	2.1713	.4060	.3731	27
.1084	.0570	.3133	.1121	.3667	.7462	.0251	.1113	.0263	.....	.....	28
.2057	.1703	2.7179	.3309	.9613	.1098	.1024	.4221	.1027	.0028	.0023	29
6.6623	3.5173	1.4542	5.4901	1.2035	1.1702	1.6932	1.1312	.5115	.4979	.6116	30
.0149	.0350	.0536	.0390	.0719	.0495	.1030	.2847	.0643	.2736	.0661	31
31.9165	35.6102	25.6207	21.1786	19.1560	26.4656	29.6692	8.8062	8.2055	8.1144	8.4482	32
.2104	.0926	3.3159	2.0290	2.2081	1.5113	4.9177	5.0401	4.3559	1.8019	.2967	33
5.5342	5.2151	6.9537	6.8686	17.9682	16.0392	8.1989	18.1694	10.8873	1.9180	1.4601	34
.0360	.0186	.0309	.5850	.0786	.....	.0051	.0275	.1234	.1464	.1475	35
13.4652	13.9711	14.7069	8.3931	14.7344	9.2800	6.4878	21.6067	13.4512	11.1419	21.8879	36
.6517	.5946	.8476	.4141	.3405	.4927	.1004	.0734	.3706	.1011	.2754	37
.3168	.3714	.4188	.7941	1.0030	.9986	.9476	.8658	2.9204	.6144	.2221	38
1.2217	.5572	1.0909	1.2041	3.4309	1.4317	2.5081	4.0299	6.5024	4.6406	2.6312	39
.1318	.0697	.5379	.3396	1.0876	.4141	.4034	4.3725	3.3807	1.6391	1.5366	40
.0195	.0363	.0901	.0159	.0151	.....	.1766	.1428	.0185	.1656	.1006	41
.0780	.0693	.0367	.1393	.8441	.0466	.3207	.0669	.0106	.0515	.0081	42
.8273	1.2722	.9803	3.4928	3.8749	7.8748	11.1956	11.2342	3.3474	3.7772	.3982	43
.0232	.0082	.0539	.0393	.0133	.0080	.0265	.0268	.1758	.0298	.0238	44
.0847	.1533	.1052	.0602	.0628	.7578	.4805	.0416	.1018	.2606	.1785	45
1.2930	1.2594	1.2486	.3858	.8964	2.3435	.6753	.3156	4.1412	27.5833	10.2845	46
.....	.....	.....	.0091	.0003	.....	.0541	.0778	.....	.0019	.....	47
100.0000	100.0000	100.0000	100.0000	100.0000	100.0000	100.0000	100.0000	100.0000	100.0000	100.0000	

C.—COMPARATIVE TABLE SHOWING THE

	STATES AND TERRITORIES.	PENALTIES, ETC., COLLECTED. Fiscal year ended June 30—							
		1878.	1879.	1880.	1881.	1882.	1883.	1884.	1885.
1	Alabama	1.2220	.6981	3.8446	1.1899	2.1497	.6862	.7780	1.1173
2	Arizona	.0216	.0137	.0003	.2575	.2206	.0484	.....	.....
3	Arkansas	.2126	.2920	1.3447	.9583	.5599	.8150	.4537	.6999
4	California	.6165	2.1445	2.0896	2.5737	3.6248	1.1012	23.7821	1.2899
5	Colorado	.6659	.0482	.4952	.5839	.9610	.2555	.1296	.6746
6	Connecticut	.6097	.4695	2.8172	.7810	1.0248	.2214	.6811	.2824
7	Dakota	.0048	.0559	.3450	.3793	.2692	.1224	.....	.....
8	Delaware	.2265	.4085	.0423	.6983	.1352	.1049	.0003	.....
9	District of Columbia	.....	.....	.....	.....	.....	.....	.....	.....
10	Florida	.0460	.0332	.0973	.1413	.1184	.1227	.0091	.1344
11	Georgia	.8767	7.4423	1.4557	2.1494	2.8087	1.7428	1.1547	2.4858
12	Idaho	.0705	.1161	.0902	.1050	.1300	.1247	.0246	.....
13	Illinois	5.0782	7.2420	5.3457	12.0301	5.7339	5.5626	3.6298	35.2027
14	Indiana	1.2202	.4335	2.0532	5.1638	17.5059	1.2134	.0779	1.4600
15	Iowa	2.2006	4.3396	2.8718	6.1097	2.5679	2.6175	5.5687	2.3438
16	Kansas	.0532	.2441	.1582	.3410	.5265	.2046	.1335	.0808
17	Kentucky	2.9514	4.4085	2.6276	1.6239	2.4342	2.9365	4.5020	4.0015
18	Louisiana	4.5585	.4381	5.6725	1.8897	5.3995	2.3941	8.4577	1.1320
19	Maine	.6180	.9720	.5462	.7575	.8758	.2796	.1404	.2941
20	Maryland	.6466	.3013	8.3789	.5840	.5145	15.7296	.0525	.1788
21	Massachusetts	3.7419	5.3181	2.7583	2.2569	10.6085	10.0312	1.3038	2.8667
22	Michigan	1.0951	6.2612	1.9111	1.8151	2.9291	1.6151	1.3738	.8720
23	Minnesota	.6010	.5927	.4400	.7127	.8739	.5738	.8781	.7046
24	Mississippi	2.6753	4.2598	.5790	3.3424	.2464	.1545	.1035	.2553
25	Missouri	33.4358	2.6388	2.3987	3.3152	2.4135	7.1951	.7327	2.2630
26	Montana	.....	.2238	.....	.....	.....	.....	.0346	.2021
27	Nebraska	.6399	.1582	.4394	.3831	1.2065	.3108	.2280	1.1066
28	Nevada	.0014	.....	.0652	.0675	.0340	.....	.....	.....
29	New Hampshire	.0638	.0465	.0451	.0445	.1844	.....	.0509	.2623
30	New Jersey	.4144	.6256	1.4511	1.8677	1.6218	16.2989	.3183	1.3268
31	New Mexico	.3453	.0047	.0028	.....	.0222	.1844	.3530	.0804
32	New York	6.5487	11.1295	22.1070	12.5998	9.2477	12.0491	5.5376	13.5430
33	North Carolina	3.4236	3.5246	3.2129	4.2771	4.2737	1.9037	2.4386	2.8173
34	Ohio	6.8313	4.5298	6.9486	6.8490	2.9576	2.4919	2.4892	2.2963
35	Oregon	.1207	.3918	.1136	.3611	.0081	.2207	.1539	.2021
36	Pennsylvania	8.1663	8.4155	3.9484	13.1768	4.5388	1.5056	18.0749	5.3334
37	Rhode Island	.6405	.1531	.2398	.3211	.3977	.2162	.2011	.3560
38	South Carolina	.5600	.4920	.7020	1.1965	.6009	1.8637	.5268	1.7377
39	Tennessee	1.5645	4.1511	3.4483	5.0552	5.0414	3.9059	2.9067	6.8237
40	Texas	4.1684	2.3553	1.4334	1.7499	1.2430	1.0397	10.8434	2.1636
41	Utah	.5495	.0301	3.0027	.0456	.0375	.2237	.....	.....
42	Vermont	.1268	.0814	.4235	.3042	.3757	.1835	.1194	.1596
43	Virginia	.6614	.7032	.7661	1.0644	1.7025	.6050	.5210	3.0462
44	Washington	.1422	.1792	.0260	.0004	.1100	.0719	.0052	.....
45	West Virginia	.2327	.4818	1.2124	.5626	1.3245	.3367	.3260	.5082
46	Wisconsin	1.3475	17.5458	2.0478	.3139	.3661	.7358	.9038	.6751
47	Wyoming	.0025	.0055	.0006	.....	.....	.....	.....	.....
	Total	100.0000	100.0000	100.0000	100.0000	100.0000	100.0000	100.0000	100.0000

PERCENTAGES OF RECEIPTS, ETC.—Continued.

PENALTIES, ETC., COLLECTED.				AGGREGATE RECEIPTS.							
Fiscal year ended June 30—				Fiscal year ended June 30—							
1886.	1887.	1888.	1889.	1864.	1865.	1866.	1867.	1868.	1869.	1870.	
.....	.0256	.7717	.6923	.....	.....	1.4253	1.6601	2.4419	.3302	.3555	1
.....	.....	.....	.....	.....	.....	.....	.0011	.0079	.0079	.0093	2
.6720	.0166	.4844	.4955	.....	.....	.0884	.7062	.4818	.1014	.2204	3
13.5022	18.0398	9.0875	6.4375	1.5306	2.0009	1.7000	2.7233	3.7388	3.1669	2.7467	4
.1317	.0178	.0015	.....	.0376	.0672	.0519	.0611	.0680	.0427	.0441	5
.2450	1.1885	3.7856	3.0156	2.9879	3.3362	3.3238	3.0561	2.5108	1.6364	1.5305	6
.....	.....	.....	.....	.....	.....	.....	.0008	.0058	.0070	.0052	7
.....	.0708	.....	.....	.3570	.4160	.3496	.3168	.3357	.2972	.2698	8
.....	.....	.....	.....	.3341	.3798	.2645	.2838	.2769	.3119	.3070	9
.0003	.0190	.....	.2401	.....	.....	.0339	.2249	.2298	.0501	.0635	10
1.4829	4.3615	2.9068	4.1588	.....	.....	1.4861	1.8085	3.5074	.7064	.6829	11
.....	.....	.....	.....	.....	.....	.0274	.0328	.0544	.0546	.0390	12
3.3937	4.1665	9.5828	13.0061	9.0370	4.8316	5.3107	4.8818	4.3164	9.1334	10.9599	13
.1729	.6522	.7857	.6468	3.1026	2.4459	1.8685	1.6616	1.3365	2.7056	3.0109	14
5.4126	2.6256	2.3041	4.5837	.5773	.8802	.9365	.8359	.6746	1.0895	.8224	15
.3204	.1546	.2405	.2305	.0597	.1002	.1239	.1481	.1449	.1711	.2048	16
3.9756	1.5109	12.4496	3.0247	3.6029	2.4641	2.0426	2.1824	2.3619	5.2768	5.9009	17
.7289	.0409	1.3632	4.1491	2.0767	.8098	2.1377	2.5095	2.1833	1.3299	1.7704	18
.3745	.7178	.....	.....	1.1815	1.3286	.9736	.9376	.9096	.4084	.4817	19
.5769	.0774	.6956	.3239	2.7489	2.7511	2.6760	2.4835	2.4427	3.1795	3.2457	20
8.0557	3.2695	.4111	1.9811	11.1144	12.8101	12.0681	11.3201	10.1287	6.4830	6.3763	21
2.7507	1.1691	1.6507	7.3163	1.0966	1.3203	1.2006	1.2542	1.5736	1.8476	1.7421	22
.2386	.2337	1.9574	.6526	.0801	.1303	.1317	.1822	.2102	.2540	.2792	23
.7435	.6138	.....	.....	.....	.....	.2695	1.8471	2.1408	.1357	.1700	24
2.3849	4.4545	5.7757	3.5634	3.0198	2.7803	2.5833	2.6173	2.8035	3.7026	3.5834	25
.....	.....	.2741	.....	.....	.0183	.0391	.0312	.0618	.0450	.0618	26
.3093	.0549	.2881	.2138	.0245	.0291	.0348	.0435	.0729	.1128	.1841	27
.2369	.4075	.....	.....	.0728	.1461	.0978	.1169	.1763	.1605	.1122	28
.....	.2793	1.3869	2.4777	.9808	1.2910	1.2004	1.1616	1.1078	.4534	.3774	29
8.7631	1.5944	1.2238	1.5503	2.8453	3.8502	3.5153	3.1800	3.2196	2.0515	2.4322	30
.2152	.0988	.0384	.1411	.0100	.0249	.0246	.0259	.0328	.0305	.0280	31
24.7687	33.7618	17.2045	10.3617	24.8485	27.2475	24.8068	23.7079	22.4788	24.9716	21.7006	32
3.7346	4.0440	5.5174	7.8841	.....	.....	.1429	.6645	1.1282	.5247	.8348	33
3.4323	2.1716	3.2775	2.7910	11.1612	8.1289	8.8754	8.0212	6.9752	11.2681	11.6786	34
.1184	1.6186	.3922	.5448	.0950	.0808	.0964	.1416	.1999	.1202	.1965	35
2.1785	2.5181	3.5038	3.7562	12.8092	15.3605	13.7762	11.1156	10.4244	10.8163	9.9956	36
.6405	.2589	.....	.....	1.8123	2.1880	2.1115	2.0353	1.6277	.8994	.7653	37
.5874	.3571	1.5167	.4792	.....	.....	.3403	.7323	1.5034	.2474	.2459	38
3.5150	3.9608	5.7903	7.8432	.5503	.8144	1.1664	1.3499	2.1209	.8780	.8778	39
2.0023	1.3331	.9894	1.8742	.....	.....	.5427	1.2945	1.0282	.3378	.2333	40
.....	.....	.....	.....	.0126	.0212	.0214	.0259	.0280	.0475	.0276	41
.8966	.4032	.....	.....	.4228	.4554	.4147	.3975	.3551	.2228	.2103	42
1.3189	2.2682	2.1006	2.2931	.1256	.1123	.4054	.7926	1.0175	1.9186	3.2802	43
.....	.....	.....	.....	.0204	.0389	.0166	.0318	.0400	.0345	.0497	44
.8110	.1610	.4005	.0390	.3213	.3225	.3520	.3807	.4520	.3937	.4518	45
.4023	.6166	1.8421	2.3326	.9427	.9364	.9457	1.0128	1.0336	1.3697	1.4103	46
.....	.....	.....	.....	.....	.....	.....	.....	.....	.0036	.0154	47
100.0000	100.0000	100.0000	100.0000	100.0000	100.0000	100.0000	100.0000	100.0000	100.0000	100.0000	

D.—Comparative Table showing the Aggregate Receipts of Internal States, by fiscal years, from

	DISTRICTS.	FISCAL YEAR ENDED JUNE 30—					
		1863.	1864.	1865.	1866.	1867.	1868.
	ALABAMA.						
1	First (1)				$2,917,189.13	$1,842,963.82	$1,364,609.54
	First (2)						
	Second (1)				1,118,080.44	1,831,443.70	2,377,812.39
2	Second (2)						
	Second (3)						
3	Third (1)				97,041.48	444,722.71	537,183.88
	Total				4,132,311.05	4,119,130.23	4,279,605.81
	ARKANSAS.						
1	First (5)				256,147.11	783,336.76	540,690.88
2	Second (5)					886,001.17	231,940.75
3	Third (*a*) (5)					82,819.25	71,758.36
	Third (6)						
	Total				256,147.11	1,752,157.18	844,389.99
	CALIFORNIA.						
	First (7)	$348,828.56	$1,136,116.28	$2,733,873.74	3,473,692.91	5,199,567.48	5,160,081.82
1	First (8)						
	First (9)						
2	Second (7)	43,405.01	114,000.13	242,346.37	343,746.05	445,079.95	498,423.17
3	Third (10)	58,378.00	94,534.84	148,981.22	178,980.98	187,631.49	132,039.78
	Fourth (11)	141,738.31	263,564.87	676,910.05	696,990.19	707,217.12	542,634.82
4	Fourth (12)						
	Fourth (13)						
5	Fifth (11)	39,481.95	68,172.25	141,941.10	235,487.80	217,632.65	219,346.85
	Total	631,831.83	1,676,388.37	3,944,052.48	4,928,898.53	6,757,131.69	6,552,526.45
	CONNECTICUT.						
	First (18)	572,438.90	1,152,890.36	2,299,479.81	2,864,903.51	2,548,344.02	1,456,323.76
1	First (19)						
	First (20)						
2	Second (21)	399,342.34	898,966.11	1,863,831.34	2,791,672.05	2,126,724.98	1,263,959.37
	Second (22)						
3	Third (18)	324,349.24	668,228.12	1,279,600.90	1,733,587.49	1,367,288.31	787,104.36
4	Fourth (21)	256,484.37	552,430.36	1,133,152.16	2,246,524.85	1,540,613.26	893,010.88
5	Fifth (23)						
	Total	1,552,614.85	3,272,515.95	6,576,064.21	9,636,687.90	7,582,970.57	4,400,398.37
	GEORGIA.						
1	First (29)				411,057.63	507,262.24	750,690.50
	Second (30)				2,251,265.98	2,136,073.50	2,739,432.31
2	Second (31)						
	Second (32)						
	Second (33)						
	Third (29)				1,249,422.93	1,262,036.09	1,674,719.52
3	Third (34)						
	Third (32)						
4	Fourth (30)				396,830.46	582,069.07	982,122.36
	Total				4,308,577.00	4,487,440.90	6,146,964.69
	ILLINOIS.						
1	First (35)	865,254.98	3,739,478.21	3,953,665.95	7,095,203.40	5,467,986.87	3,998,315.33
	First (36)						
	Second (5)	72,702.98	378,046.63	374,308.89	588,209.86	337,461.39	300,455.66
2	Second (37)						
	Second (38)						
3	Third (39)	78,742.48	252,210.57	344,604.83	547,715.19	442,942.38	220,659.50
	Fourth (40)	207,290.33	977,177.16	658,005.33	1,147,629.71	1,626,967.73	648,280.05
4	Fourth (41)						
	Fourth (42)						
5	Fifth (35)	166,620.42	2,689,125.64	1,466,519.10	1,202,275.08	639,194.31	319,839.15
	Fifth (44)						
6	Sixth (5)	62,907.40	129,811.72	284,327.58	455,161.88	409,331.63	250,042.44
7	Seventh (45)	102,825.99	177,984.05	215,175.26	1,426,229.60	1,051,360.62	283,085.74
	Eighth (45)	98,608.04	641,296.98	746,362.28	1,094,005.80	895,860.38	410,594.57
8	Eighth (46)						
	Eighth (44)						

[The notes to the references in this table

REVENUE IN EACH COLLECTION DISTRICT, STATE, AND TERRITORY OF THE UNITED SEPTEMBER 1, 1862, TO JUNE 30, 1889.

FISCAL YEAR ENDED JUNE 30—								
1869.	1870.	1871.	1872.	1873.	1874.	1875.	1876.	
$257,988.05	$233,676.68	$132,204.53	$130,333.60	$81,836.63	$51,749.47	$53,690.08	$44,718.07	1
166,091.07	296,734.19	121,128.60	78,755.20	40,369.94	59,450.27	41,992.84	46,978.18	2
48,237.13	65,289.30	110,425.24	29,071.34	30,286.78	24,592.87	20,006.45	17,644.72	3
472,316.25	595,700.17	363,758.37	238,160.14	152,493.35	135,792.61	115,689.37	109,340.97	
22,951.51	205,469.37	47,400.88	40,849.27	23,252.19	18,478.01	15,038.86	3,192.94	1
93,333.73	131,520.65	56,547.31	34,786.02	37,482.57	26,402.93	21,160.69	4,250.66	2
28,699.83	32,294.08	26,576.28	18,665.93	28,126.26	23,996.00	39,177.89	12,060.60	3
							48,696.88	
144,985.07	369,284.10	130,524.47	94,301.22	88,861.02	68,876.94	75,377.44	68,201.08	
3,364,162.38	3,151,998.32	2,226,231.40						
		598,678.41	2,490,717.82	1,734,547.63				1
				256,055.20	2,262,713.81	2,726,075.19	2,815,656.29	
353,364.23	359,043.24	232,053.85				326.13		2
166,578.86	200,629.61	146,822.59	196,042.27	113,445.41				3
481,363.71	568,890.25	304,952.44	285,832.25	174,218.97	146,880.33	161,294.80	45,718.40	4
							206,570.34	
164,078.26	321,877.89	98,182.89	80,925.05	89,643.86	72,247.36	100,337.14	27,094.87	5
4,529,547.44	4,602,439.31	3,606,921.58	3,053,517.39	2,367,911.07	2,481,841.50	2,988,033.26	3,095,039.90	
936,528.89	1,020,409.28	648,671.05	544,049.21	247,170.66		.02		
				251,588.03	367,211.55	388,542.59	378,063.41	1
612,503.22	760,691.38	376,938.54	345,751.21	194,806.04	49,989.54	27.00		
					142,098.09	239,128.35	279,451.10	2
313,154.48	299,599.94	154,831.98	144,726.52	51,390.01		*20.00		3
478,319.36	483,776.54	246,429.34	170,087.70	129,030.25	21,079.93			4
								5
2,340,505.95	2,564,477.14	1,426,870.91	1,204,614.64	873,984.99	580,379.11	627,717.96	658,114.51	
240,190.72	260,456.61	138,077.19	112,845.86	90,492.97	55,588.98	55,111.65	47,202.52	1
255,731.22	330,115.95	155,277.11	99,355.47	57,361.33	66,910.66	63,643.12	56,727.60	2
255,782.51	227,960.08	154,782.68	125,561.46	117,647.87	85,548.87	88,362.85	80,509.41	3
258,577.12	325,708.74	288,807.04	245,397.39	212,457.73	176,574.04	181,109.22	178,286.91	4
1,010,281.57	1,144,241.38	736,944.02	583,160.18	477,959.90	384,622.55	388,226.84	362,726.44	
6,771,168.61	8,395,131.87	7,269,582.79	6,155,659.12	6,798,288.11	6,606,125.82	7,839,298.64	8,971,565.08	1
351,458.21	398,012.17	245,842.68	147,511.81	60,209.18	56,279.56	57,799.81	24,595.97	
							193,544.97	2
355,364.66	576,926.96	757,663.64	751,763.04	550,937.78	319,475.35	617,937.87	1,299,832.96	3
1,185,292.87	1,602,059.85	1,233,013.65	1,723,054.91	1,203,453.25	984,958.64	1,097,690.25	792,141.53	
							472,885.50	4
1,591,351.02	3,663,260.07	2,553,970.87	4,108,333.42	4,766,975.11	4,716,712.55	4,851,139.18	8,003,048.41	5
396,465.53	541,399.74	380,103.35	559,911.41	354,950.98	355,864.69	366,387.65	99,654.16	6
624,180.36	746,513.53	789,495.36	230,067.95	170,921.89	70,228.53	79,010.14	86,617.82	7
788,314.06	1,215,798.16	814,509.77	1,150,031.23	1,866,513.65	1,619,096.60	1,840,931.27	2,933,064.45	8

will be found on pages 320, 321, 322, and 323.]

D.—COMPARATIVE TABLE SHOWING THE AGGREGATE RECEIPTS OF

	DISTRICTS.	FISCAL YEAR ENDED JUNE 30—					
		1877.	1878.	1879.	1880.	1881.	1882.
	ALABAMA.						
1	First (1)	$18,116.16					
	First (2)	28,116.30	$67,967.87	$50,084.72	$63,256.41	$55,430.37	$73,504.25
	Second (1)	18,676.52					
2	Second (2)	32,712.12	70,001.70	72,149.66	72,633.97	75,221.02	67,028.67
	Second (3)						
3	Third (1)	10,388.90					
	Total	108,010.00	137,969.57	122,234.38	135,890.38	130,651.39	140,532.92
	ARKANSAS.						
1	First (5)						
2	Second (5)						
3	Third (a) (5)						
	Third (6)	85,850.09	115,735.77	115,219.57	126,089.12	132,086.94	109,039.36
	Total	85,850.09	115,735.77	115,219.57	126,089.12	132,086.94	109,039.36
	CALIFORNIA.						
	First (7)						
1	First (8)						
	First (9)	2,434,703.01	1,844,481.07	1,911,385.48	2,437,650.82	3,277,931.88	3,814,692.86
2	Second (7)						
3	Third (10)						
	Fourth (11)						
4	Fourth (12)	314,890.73	302,308.30	306,113.21	345,983.82	335,458.98	312,484.65
	Fourth (13)						
5	Fifth (11)						
	Total	2,749,593.74	2,146,789.46	2,217,498.69	2,783,634.64	3,613,390.86	4,127,177.51
	CONNECTICUT.						
	First (18)						
1	First (19)	336,998.04	299,882.69	251,313.21	212,856.33	283,883.46	263,811.83
	First (20)						
	Second (21)						
2	Second (22)	324,422.22	280,452.90	271,945.46	248,323.80	295,806.56	301,989.45
3	Third (18)						
4	Fourth (21)						
5	Fifth (23)						
	Total	661,420.26	580,335.59	523,258.67	461,180.13	579,690.02	565,801.28
	GEORGIA.						
1	First (29)	4,286.41					
	Second (30)	7,047.24					
2	Second (31)	112,593.46	88,532.05				
	Second (32)		197,050.89	214,714.35	223,543.92	206,405.74	264,054.22
	Second (33)						
	Third (29)	24,002.05					
3	Third (34)	84,078.87	19,018.02				
	Third (32)		78,018.94	108,056.25	98,530.26	97,727.74	95,306.66
4	Fourth (30)	46,871.27					
	Total	278,879.30	383,519.90	322,770.60	322,074.18	304,133.48	359,360.88
	ILLINOIS.						
1	First (35)	8,448,186.99	8,185,225.67	8,270,947.97	8,936,614.85	9,905,157.69	10,466,026.54
	First (36)						
	Second (5)						
2	Second (37)	217,090.03	220,756.51	236,270.45	233,160.93	247,243.89	261,351.75
	Second (38)						
3	Third (39)	1,038,352.74	857,227.95	809,835.58	705,363.28	566,405.64	676,981.44
	Fourth (40)						
4	Fourth (41)	463,270.98					
	Fourth (42)	925,335.51	1,105,926.97	967,731.85	983,112.88	1,203,221.51	1,247,764.75
5	Fifth (35)	7,598,502.78	6,594,669.22	6,930,169.57	10,324,576.75	11,425,131.77	13,267,988.65
	Fifth (44)						
6	Sixth (5)						
7	Seventh (45)	79,937.18	52,428.08	50,273.78	57,203.42	67,884.77	75,595.53
	Eighth (45)	2,639,666.76	2,029,688.18	1,490,264.30	815,000.92	1,407,236.90	1,429,153.26
8	Eighth (46)						
	Eighth (44)						

INTERNAL REVENUE IN EACH COLLECTION DISTRICT, ETC.—Continued.

FISCAL YEAR ENDED JUNE 30—							Total.	
1883.	1884.	1885.	1886.	1887.	1888.	1889.		
							$7,129,075.76	1
$50,941.26	$1,481.70						390,782.88	
							6,197,513.34	2
57,732.59	3,462.37						450,942.10	
	80,454.26	$73,315.34	$81,038.08	$78,542.76	$79,617.65	$92,762.36	485,730.45	
							1,434,890.80	3
108,673.85	85,398.33	73,315.34	81,038.08	78,542.76	79,617.65	92,762.36	16,088,935.33	
							1,956,807.78	1
							1,523,426.48	2
							304,174.48	
97,715.53	91,009.87	87,292.48	94,893.08	97,630.38	106,541.78	120,719.22	1,428,520.07	3
97,715.53	91,009.87	87,292.48	94,893.08	97,630.38	106,541.78	120,719.22	5,272,928.81	
							26,794,552.90	
							4,823,943.86	1
3,675,820.34	3,098,043.62	2,342,080.55	1,783,232.13	1,790,636.94	1,892,647.78	1,783,649.27	40,147,456.24	
							2,631,788.73	2
							1,624,068.05	3
							5,198,206.51	
326,552.80	57,123.91	252,137.75	307,552.71	290,584.63			3,357,761.92	4
	229,598.42	18,941.83			306,767.33	313,363.91	868,671.49	
							1,876,449.92	5
4,002,373.14	3,384,765.95	2,613,160.13	2,090,784.84	2,081,221.57	2,199,415.11	2,097,013.18	87,322,899.62	
							14,291,215.47	
229,524.34	30,429.36						3,285,704.84	1
	357,848.25	412,626.19	461,971.84	481,405.47			1,713,851.75	
							11,685,203.12	
286,466.50	40,093.32						2,710,177.75	2
							7,123,876.35	3
							8,150,939.00	4
					804,708.30	785,714.88	1,590,423.18	5
506,990.84	428,370.93	412,626.19	461,971.84	481,405.47	804,708.30	785,714.88	50,551,891.46	
							2,673,263.28	1
							8,218,941.49	
							151,125.51	
307,770.27	24,192.09						1,498,631.48	2
	352,285.69	316,441.40	304,384.29	336,705.86	380,673.22	436,119.14	2,126,609.60	
							5,346,336.32	
							103,096.89	3
87,890.76	3,264.06						568,794.67	
							3,874,811.35	4
395,661.03	379,741.84	316,441.40	304,384.29	336,705.86	380,673.22	436,119.14	24,561,610.59	
9,119,191.79	8,447,053.80	8,001,784.74	7,248,194.73	8,851,922.56			179,807,032.11	1
					9,463,818.28	9,134,585.96	18,598,404.24	
							3,392,894.20	
254,223.33	16,966.35						1,880,628.21	2
	212,616.78	222,400.84	225,279.14	241,450.64			901,747.40	
101,092.49	2,929.11						11,874,965.44	3
							15,086,995.26	
							936,156.48	4
772,861.95	428 070.12	301,319.27	335 071.91	357,801.42			8,628,818 14	
13,963,625.50	13,036,354.77	13,298,687.18	13,913,381.95	13,657,928.09			164,749,380.56	5
					18,388,340.56	19,322,265.26	37,710,605.82	
							4,646,320.16	6
54,731.27	4,525.49						6,496,276.36	7
1,116,936.93	126,645.85						27,229,670.64	
	791,811.50	903,888.47	1,632,815.41	1,136,906.31			4,465,431.69	8
					1,693,203.64	2,318,206.60	4,011,410.24	

D.—COMPARATIVE TABLE SHOWING THE AGGREGATE RECEIPTS OF

	DISTRICTS.	FISCAL YEAR ENDED JUNE 30—					
		1863.	1864.	1865.	1866.	1867.	1868.
	ILLINOIS—continued.						
9	Ninth (40)	$71,823.27	$151,294.63	$319,054.18	$348,771.65	$199,545.01	$139,490.50
10	Tenth (5)	42,897.99	118,772.67	304,361.99	384,388.97	297,129.06	286,259.63
	Tenth (47)						
11	Eleventh (48)	15,771.22	27,150.42	79,465.20	130,859.48	118,434.94	81,578.77
12	Twelfth (5)	139,231.56	513,443.39	574,536.62	709,117.75	439,990.90	435,286.82
13	Thirteenth (48)	87,915.80	102,178.80	203,334.37	267,895.44	186,760.62	131,018.95
	Thirteenth (49)						
	Thirteenth (43)						
	Total	2,012,592.46	9,897,970.87	9,523,721.58	15,397,463.81	12,112,985.84	7,564,886.51
	INDIANA.						
1	First (50)	124,500.72	239,191.09	424,812.51	738,232.54	740,105.68	416,297.17
	First (51)						
2	Second (5)	89,204.67	215,986.33	403,138.74	578,168.32	419,139.82	278,833.70
	Second (52)						
3	Third (5)	13,949.37	150,442.91	826,796.47	767,813.74	643,891.08	157,867.36
4	Fourth (50)	285,560.78	1,321,298.05	835,475.90	772,233.75	384,210.86	128,732.05
	Fourth (51)						
5	Fifth (53)	86,078.75	299,060.13	320,319.28	340,403.66	221,274.95	152,617.58
6	Sixth (5)	125,633.06	349,682.13	617,557.40	664,874.09	579,837.36	418,343.98
	Sixth (54)						
	Sixth (51)						
	Sixth (55)						
	Sixth (56)						
7	Seventh (50)	87,111.51	218,496.70	497,368.24	367,348.12	231,803.13	200,522.44
	Seventh (51)						
	Seventh (57)						
8	Eighth (5)	69,944.35	370,473.29	329,557.36	481,475.39	386,580.57	161,201.88
9	Ninth (5)	48,706.12	100,733.85	221,351.84	276,277.05	226,199.06	209,908.30
10	Tenth (5)	19,303.44	87,332.34	224,338.47	265,524.55	197,520.80	148,342.89
	Tenth (58)						
11	Eleventh (53)	24,911.44	45,523.15	120,527.27	164,925.20	92,290.77	69,760.03
	Eleventh (59)						
	Eleventh (60)						
	Total	924,904.21	3,398,219.97	4,821,243.48	5,417,336.50	4,122,863.08	2,342,327.38
	IOWA.						
1	First (50)	79,003.05	154,187.62	447,809.06	597,437.55	753,355.08	376,213.73
2	Second (50)	75,232.31	251,194.41	459,401.29	355,918.04	292,429.67	235,486.55
	Second (61)						
	Second (62)						
3	Third (64)	57,466.44	107,993.86	530,825.29	1,374,031.25	641,136.32	267,158.45
	Third (65)						
4	Fourth (50)	35,327.34	53,622.04	157,762.44	192,131.31	200,301.56	116,252.56
	Fourth (61)						
	Fourth (62)						
	Fourth (63)						
5	Fifth (24)	27,090.74	44,188.79	107,011.26	134,614.23	119,738.84	106,298.06
6	Sixth (64)	11,842.83	21,150.02	43,948.91	61,198.13	67,090.88	80,820.88
	Total	285,962.71	632,336.74	1,746,758.25	2,715,330.51	2,074,052.35	1,182,230.22
	KENTUCKY.						
1	First (66)	31,485.72	263,672.00	517,012.01	603,985.75	315,598.59	176,929.35
2	Second (66)	188.53	119,548.47	320,464.31	428,025.14	159,566.39	146,433.25
	Second (67)						
	Second (68)						
3	Third (30)	820,238.76	2,005,153.90	2,085,846.32	2,701,831.91	233,933.64	143,277.89
4	Fourth (69)	530,858.88	1,557,718.62	1,355,471.16	1,296,595.65	258,962.83	194,777.28
5	Fifth (69)			457,907.30	623,845.92	2,679,251.37	1,987,316.93
	Fifth (70)						
6	Sixth			120,432.84	267,838.11	1,065,258.59	762,357.23
7	Seventh (71)					441,826.13	502,022.03
	Seventh (72)						
8	Eighth (71)					106,989.57	82,849.60
	Eighth (72)						
9	Ninth (71)					153,746.91	143,450.48
	Total	1,382,771.89	3,946,092.99	4,857,133.94	5,922,122.48	5,415,134.02	4,139,414.09

INTERNAL REVENUE IN EACH COLLECTION DISTRICT, ETC.—Continued.

FISCAL YEAR ENDED JUNE 30—								
1869.	1870.	1871.	1872.	1873.	1874.	1875.	1876.	
$150,257.03	$153,147.88	$81,075.73	$333,644.14	$135,419.32	$52,823.42	$100,632.86	$204,471.44	9
217,165.07	183,049.44	94,548.03	68,210.58	53,687.14	58,232.78	66,072.60	29,826.04	10
							275,810.60	
75,230.06	79,971.95	52,514.75	27,270.46	29,236.40	22,689.83	27,089.36	10,179.99	11
444,976.26	715,549.64	776,101.74	493,622.99	457,274.96	520,512.42	641,301.71	268,426.33	12
112,633.13	93,545.40	71,186.66	50,586.24	45,301.57	36,720.70	49,355.37	15,487.72	13
							49,541.21	
13,063,256.87	18,364,366.66	15,119,609.02	15,799,667.30	16,493,169.34	15,419,720.89	17,634,626.71	23,730,694.18	
513,043.15	670,576.32	735,565.72	981,513.76	952,792.93	749,459.36	509,331.26	117,684.93	1
212,543.36	223,055.20	119,087.95	89,818.36	96,651.70	54,695.22	78,072.36	25,691.46	2
							384,392.17	
410,879.30	518,649.87	481,392.29	473,920.80	582,858.35	449,485.62	312,041.07	284,759.19	3
1,089,573.69	1,681,620.03	1,819,257.45	1,977,628.65	2,407,099.98	1,975,722.39	2,141,953.30	2,319,325.91	4
127,588.44	436,695.61	158,877.09	51,470.02	36,512.28	31,802.85	46,026.25	11,458.97	5
621,189.46	586,127.36	879,533.70	563,778.36	467,826.35	308,251.06	547,374.79	497,895.71	6
							288,340.45	
341,791.45	336,242.18	412,688.37	501,381.86	562,012.78	690,664.25	766,262.79	1,398,006.94	7
221,981.83	254,817.46	419,849.40	477,419.52	352,993.97	394,907.54	54,917.04	22,446.06	8
151,188.86	176,813.95	137,824.09	173,689.61	122,828.20	79,309.23	86,759.51	37,320.59	9
119,742.07	104,383.53	92,585.43	78,263.55	66,820.97	63,742.10	72,978.37	25,834.64	10
							93,282.86	
60,235.69	56,048.31	42,307.41	73,008.23	29,654.30	25,475.97	38,072.31	10,143.83	11
							62,602.56	
3,869,757.30	5,045,023.82	4,798,468.90	5,441,892.72	5,678,052.51	4,823,495.59	4,653,789.05	5,579,126.27	
498,636.55	337,231.81	200,465.70	184,678.53	175,697.96	192,667.68	266,638.09	221,838.27	1
368,210.97	361,125.05	277,331.47	302,932.49	262,438.55	210,581.45	162,248.89	181,898.45	2
396,258.10	312,279.30	347,988.45	441,965.31	412,006.68	345,026.91	381,647.92	320,755.86	3
112,695.11	149,102.75	78,495.94	49,992.93	53,106.82	57,928.94	77,772.93	314,554.51	4
117,237.09	116,532.71	92,135.44	48,416.03	55,485.34	68,977.70	93,033.17	106,692.94	5
65,228.03	101,709.66	85,424.24	39,805.33	54,261.94	58,078.48	58,876.69	66,877.90	6
1,558,264.95	1,377,981.34	1,081,841.24	1,067,790.62	1,012,997.29	933,261.16	1,040,217.69	1,212,617.93	
121,052.98	187,208.02	196,301.89	194,026.87	191,598.40	166,652.24			1
118,026.31	256,903.29	440,726.88	332,812.01	253,464.40	355,139.00	*446.32		2
					33,479.18	743,494.82	672,654.42	
79,167.99	115,900.12	137,004.91	32,446.29	118,641.50	23,717.25	112,302.58	41,513.11	3
332,888.09	784,431.77	454,742.04	350,249.05	329,211.58	579,440.38	878,862.40	213,879.68	4
2,548,700.52	2,555,685.48	2,065,384.67	1,966,874.47	1,832,197.50	2,064,996.70	2,329,957.55	917,396.73	5
							1,865,987.51	
2,197,684.56	2,734,708.27	1,757,711.10	1,845,855.24	1,615,782.40	2,003,126.21	2,792,109.45	2,452,194.79	6
1,723,877.05	2,765,326.14	1,199,741.76	971,644.09	872,323.96	1,422,130.54	1,702,515.41	1,193,003.84	7
97,949.66	238,812.63	126,457.50	49,132.29	141,330.52	164,104.70	256,887.64	222,960.04	8
327,922.57	248,648.01	130,069.79	104,428.13	102,078.21	137,493.22	209,011.71	126,002.63	9
7,547,269.73	9,887,623.73	6,514,140.54	5,847,468.44	5,456,628.47	6,950,279.42	9,025,587.88	7,705,592.75	

D.—COMPARATIVE TABLE SHOWING THE AGGREGATE RECEIPTS OF

	DISTRICTS.	FISCAL YEAR ENDED JUNE 30—					
		1877.	1878.	1879.	1880.	1881.	1882.
	ILLINOIS—continued.						
9	Ninth (40)						
10	Tenth (5)						
	Tenth (47)	$109,789.86					
11	Eleventh (48)						
12	Twelfth (5)						
13	Thirteenth (48)						
	Thirteenth (49)	13,876.56					
	Thirteenth (43)	385,593.75	$622,868.74	$715,148.25	$980,581.46	$962,409.34	$827,555.45
	Total	21,870,203.14	19,668,791.32	19,470,641.75	23,035,614.49	25,784,681.51	28,252,417.37
	INDIANA.						
1	First (50)	19,432.64					
	First (51)	161,149.78	158,055.67	196,034.51	271,781.89	261,752.57	253,745.94
2	Second (5)						
	Second (52)	94,506.21					
3	Third (5)						
4	Fourth (50)	559,641.24					
	Fourth (51)	2,787,271.76	2,731,073.57	3,281,981.87	3,283,992.01	3,399,731.14	3,459,301.35
5	Fifth (53)						
6	Sixth (5)						
	Sixth (54)	80,043.20					
	Sixth (51)	443,098.80	633,874.96	604,972.84	877,627.86	1,094,927.90	1,164,648.03
	Sixth (55)						
	Sixth (56)						
7	Seventh (50)	457,670.40					
	Seventh (51)	1,212,459.54	1,914,333.86	1,550,090.42	1,531,283.31	2,253,760.27	1,306,664.77
	Seventh (57)						
8	Eighth (5)						
9	Ninth (5)						
10	Tenth (5)						
	Tenth (58)	143,456.08	143,586.19	142,373.92	162,978.56	174,925.19	196,885.66
11	Eleventh (53)						
	Eleventh (59)	78,490.62	79,913.31	75,650.27	85,972.86	96,156.41	104,111.19
	Eleventh (60)						
	Total	6,037,220.27	5,710,837.56	5,851,103.83	6,213,636.49	7,281,253.48	6,485,356.94
	IOWA.						
1	First (50)	52,855.44					
2	Second (50)	35,063.99					
	Second (61)	142,870.78	182,075.17	276,592.17	303,114.74	255,330.50	421,380.22
	Second (62)						
3	Third (64)	61,161.81					
	Third (65)	218,558.21	326,682.60	298,663.81	267,818.99	281,317.63	321,618.32
4	Fourth (50)	21,347.06					
	Fourth (61)	178,419.89	192,427.33	172,116.54	165,050.34	168,046.93	184,738.87
	Fourth (62)						
	Fourth (63)						
5	Fifth (24)	87,757.19	257,666.03	92,072.87	118,875.71	219,081.92	916,167.32
6	Sixth (64)	12,365.41					
	Total	810,399.78	958,851.13	839,445.39	854,859.78	923,776.98	1,843,904.74
	KENTUCKY.						
1	First (66)						
2	Second (66)						
	Second (67)	127,306.07					
	Second (68)	695,708.75	571,490.43	543,443.85	620,133.04	672,159.61	955,021.75
3	Third (30)	16,315.10					
4	Fourth (69)						
5	Fifth (69)						
	Fifth (70)	4,033,377.71	2,723,643.07	3,069,691.06	3,563,114.63	3,489,672.12	4,467,721.54
6	Sixth	2,956,245.92	2,495,496.23	2,885,094.31	3,298,244.82	3,185,221.03	3,435,658.55
7	Seventh (71)	1,396,272.96	823,474.52	894,735.23	1,018,072.33	1,009,848.31	1,281,464.30
	Seventh (72)						
8	Eighth (71)	190,709.55	158,125.16	161,193.08	236,842.19	216,681.51	221,709.36
	Eighth (72)						
9	Ninth (71)	118,488.89	108,384.74	118,788.46	149,637.89	145,579.63	169,660.64
	Total	9,534,424.95	6,880,614.15	7,672,945.94	8,885,544.90	8,719,162.21	10,531,236.14

INTERNAL REVENUE IN EACH COLLECTION DISTRICT, ETC.—Continued.

FISCAL YEAR ENDED JUNE 30—							Total.	
1883.	1884.	1885.	1886.	1887.	1888.	1889.		
							$2,441,451.06	9
							2,204,601.99	10
							385,600.46	
							777,422.83	11
							7 129,373.09	12
							1,453,340.77	
$504,862.13	$453,491.03	$347,784.11	$497,509.46	$579,695.32	$585,632.83	$232,361.97	63,417.77	13
							7,735,493.84	
25,977,525.39	23,520,484.80	23,075,864.61	23,852,252.60	24,825,704.84	30,130,995.31	31,007,419.79	512,607,328.46	
							7,932,533.73	1
207,502.62	13,578.25						1,523,601.23	
							2,884,087.19	2
							478,838.38	
							6,074,727.42	3
							19,649,384.03	4
2,765,256.46	224,104.38						21,932,712.54	
							2,320,246.56	5
							6,727,904.81	
							368,383.65	
726,345.15	15,207.41						5,610,702.95	6
	3,321,825.79	2,732,133.60	3,053,973.17	2,830,308.54			11,938,240.10	
					2,705,871.02	2,613,470.28	5,318,841.30	
							7,069,371.16	
1,636,108.50	128,716.15						11,533,416.91	7
	1,688,658.56	1,110,761.89	1,632,776.04	1,166,933.45	1,433,788.30	3,174,766.06	10,207,684.30	
							3,998,065.66	8
							2,048,010.26	9
							1,566,613.15	10
166,635.40	10,932.05						1,235,055.97	
							852,893.00	
90,871.57	3,942.63						677,711.42	11
	211,547.00	188,970.51	186,482.27	261,796.69			848,796.47	
5,592,719.85	5,618,512.22	4,031,866.00	4,873,230.48	4,259,038.68	4,139,159.32	5,788,236.34	132,798,672.24	
							4,538,716.12	1
							3,831,492.68	
292,378.77	22,324.35						1,896,060.71	2
	2,293,490.17	1,958,811.60	2,271,460.59	1,674,482.43			8,198,244.79	
							5,997,702.01	
299,913.67	220,578.23	182,526.32	192,005.13	188,287.73	165,581.44	149,082.55	3,112,634.63	3
							1,670,394.23	
147,513.93	13,229.74						1,221,543.57	4
	79,605.60	80,721.23	83,875.22	88,354.73			332,556.78	
					353,329.73	243,494.35	596,824.08	
3,322,913.70	128,188.44						6,380,175.52	5
							828,679.33	6
4,062,720.07	2,757,416.53	2,222,059.15	2,547,340.94	1,951,124.89	518,911.17	392,576.90	38,605,030.45	
							2,965,523.82	1
							2,937,744.30	
							1,576,934.49	2
1,535,657.15	2,086,085.51	1,720,789.87	1,774,514.97	1,035,474.68	1,122,919.06	1,498,272.35	14,831,071.02	
							8,607,291.27	3
							9,118,089.41	4
							22,029,515.14	5
7,550,781.73	8,626,352.66	7,076,453.08	6,946,473.84	5,251,319.79	6,683,997.22	8,866,882.01	74,215,467.97	
3,835,345 17	4,263,344.24	3,361,765.25	3,648,163.06	4,141,341.13	3,714,734.95	3,406,916.07	64,242,629.52	6
1,973,863.32	243,598.68						21,435,740.65	7
	2,452,179.32	1,931,691.40	2,435,332.58	1,295,634.19	1,675,739.41	2,019,001.86	11,809,578.76	
301,889.19	31,036.11						3,005,160.25	8
	867,595.66	751,775.84	942,456.14	693,759.84	985,296.48	1,119,742.47	5,360,626.43	
189,541.07	12,979.98						2,695,912.96	9
15,387,077.63	18,583,172.16	14,842,475.44	15,746,940.59	12,417,529.63	14,182,687.12	16,910,814.76	244,891,885.99	

D.—Comparative Table showing the Aggregate Receipts of

	DISTRICTS.	FISCAL YEAR ENDED JUNE 30—					
		1863.	1864.	1865.	1866.	1867.	1868.
	LOUISIANA.						
1	First (73)	$154,341.17	$2,274,542.70	$1,714,502.46	$5,501,783.24	$3,710,106.61	$2,914,854.79
	First (74)						
2	Second (73)				320,862.47	1,347,918.14	519,885.35
3	Third (73)				375,167.66	1,168,763.11	400,675.53
4	Fourth (75)						
	Total	154,341.17	2,274,542.70	1,714,502.46	6,197,813.37	6,226,787.86	3,826,415.67
	MAINE.						
1	First (50)	209,883.54	645,390.31	1,238,522.99	1,296,933.12	1,027,197.87	771,817.36
	First (76)						
	First (77)						
2	Second (5)	113,740.81	281,232.03	656,611.01	665,673.32	565,197.37	404,072.50
	Second (78)						
3	Third (5)	81,442.21	160,427.05	312,375.96	397,031.01	333,297.95	211,603.38
4	Fourth (5)	69,498.84	127,900.96	207,092.35	263,848.13	234,152.39	130,884.56
	Fourth (79)						
5	Fifth (5)	40,070.98	79,143.62	204,220.92	199,377.12	166,534.42	75,702.54
	Total	514,636.38	1,294,093.97	2,618,823.23	2,822,862.70	2,326,380.00	1,594,080.34
	MARYLAND.						
1	First (80)	31,673.59	95,182.00	237,198.63	256,709.96	142,652.99	131,607.36
	First (81)						
2	Second (80)	176,159.31	488,999.26	826,825.84	1,158,287.22	1,165,710.96	633,842.67
	Third (5)	666,866.19	1,851,504.94	3,399,810.64	5,325,005.41	4,117,138.87	2,892,485.05
3	Third (82)						
	Third (51)						
	Third (83)						
4	Fourth (39)	86,238.93	267,926.77	465,278.97	451,191.66	274,670.09	276,277.68
5	Fifth (5)	468.36	307,209.96	493,649.85	567,477.92	462,004.94	346,840.49
6	Sixth (84)						
	Total	961,406.38	3,010,822.93	5,422,763.93	7,758,672.17	6,162,177.85	4,281,053.25
	MASSACHUSETTS.						
1	First (85)	297,827.74	668,462.66	1,447,742.30	1,960,261.56	1,439,959.37	998,442.91
	First (86)						
2	Second (85)	447,521.04	959,368.89	2,057,293.45	2,915,192.46	2,254,214.03	1,061,594.45
	Third (85)	974,879.28	2,587,324.35	5,967,667.70	7,589,362.73	6,048,528.63	5,095,511.86
	Third (86)						
3	Third (87)						
	Third (88)						
	Third (89)						
4	Fourth (85)	380,037.92	1,749,546.84	2,450,919.19	3,514,723.00	3,725,690.52	1,794,195.42
5	Fifth (85)	413,436.44	979,427.79	2,013,362.00	2,874,531.83	2,071,305.91	1,071,755.77
	Fifth (90)						
6	Sixth (85)	510,654.08	1,572,956.90	2,835,503.07	4,133,613.64	3,112,729.69	1,673,565.93
7	Seventh (85)	386,048.91	920,510.86	2,474,913.68	3,712,178.52	2,615,400.46	1,982,463.55
8	Eighth (85)	591,260.45	1,224,750.33	2,560,618.25	3,750,122.15	2,948,323.17	1,530,423.28
	Eighth (91)						
9	Ninth (85)	275,060.99	617,477.62	1,387,530.37	1,790,412.86	1,606,266.54	928,092.58
10	Tenth (85)	553,774.01	893,305.98	2,054,812.29	2,688,809.58	2,235,659.28	1,615,176.92
	Tenth (91)						
	Tenth (92)						
	Total	4,830,500.86	12,173,222.22	25,250,362.30	34,969,208.33	28,088,077.60	17,751,222.67
	MICHIGAN.						
1	First (1)	150,676.74	690,363.40	1,550,541.09	2,013,559.92	1,896,527.30	1,655,815.30
	First (93)						
	First (72)						
2	Second (94)	59,896.50	197,127.73	214,384.00	319,716.64	229,166.53	291,698.32
3	Third (94)	44,529.48	110,381.59	270,864.89	331,823.59	324,850.24	255,157.47
	Third (95)						
4	Fourth (71)	31,513.00	64,856.59	136,597.63	216,088.29	190,662.18	197,188.80
	Fourth (72)						
5	Fifth (1)	4,902.38	47,111.11	178,613.46	190,880.23	153,545.05	112,936.58
6	Sixth (71)	52,900.87	91,246.29	251,476.72	408,763.27	317,319.15	245,619.86
	Total	344,418.97	1,201,086.71	2,602,437.79	3,480,831.94	3,112,070.47	2,757,816.33

INTERNAL REVENUE IN EACH COLLECTION DISTRICT, ETC.—Continued.

FISCAL YEAR ENDED JUNE 30—								
1869.	1870.	1871.	1872.	1873.	1874.	1875.	1876.	
$1,735,638.89	$2,750,068.50	$1,733,746.44	$1,523,702.01	$1,261,368.61	$886,594.25	$552,211.65	$473,355.28	1
69,643.38	154,823.83	100,834.42	53,906.51	42,947.66	50,094.06	34,216.96	36,167.75	2
96,833.61	76,631.69	78,174.39	50,173.71	35,291.03	45,776.37	19,835.77	20,264.65	3
								4
1,902,115.88	2,981,524.02	1,912,755.25	1,627,782.26	1,339,607.30	982,464.68	606,264.38	529,787.68	
285,065.81	409,050.60	210,176.20	168,552.86	124,363.19	65,908.59	45,352.77	41,530.76	1
119,172.78	101,384.15	55,976.57	39,083.87	27,868.53	20,841.71	20,138.33	8,034.34	2
							8,373.29	
120,236.40	123,470.67	56,699.25	33,379.52	19,108.03	12,367.78	16,434.89	4,649.38	3
82,484.77	96,978.97	56,232.22	36,663.80	25,864.49	14,044.04	12,528.38	4,768.03	4
							10,777.34	
62,046.64	76,339.97	33,012.24	24,443.00	17,492.02	15,427.33	13,018.78	4,522.83	5
669,006.40	807,224.36	412,096.48	302,123.05	214,696.26	128,089.45	107,473.15	90,655.97	
104,097.28	98,943.73	98,254.57	28,304.67					1
			351,979.16	740,755.74	748,169.57	909,543.05	580,189.57	
528,468.01	578,837.11	287,454.02	212,558.95			*464.56		2
3,426,205.02	4,029,144.17	2,717,607.00	2,528,555.19	1,570,819.21	1,398,788.98	1,582,313.14	872,570.74	
							988,529.32	3
188,147.38	252,606.16	168,686.44	97,535.70	92,965.49	76,327.83	103,195.61	98,125.93	4
306,675.07	478,941.74	431,852.77	572,335.94	249,261.39	127,820.95	165,280.21	38,163.56	5
								6
4,547,592.76	5,438,472.91	3,703,854.80	3,791,269.61	2,653,801.83	2,351,107.33	2,760,736.57	2,577,579.12	
365,706.18	410,702.61	490,712.74	161,728.89	132,328.98	35,028 30	17,481.16		1
						35,253.72	56,848.41	
467,953.34	458,919.22	127,148.39	224,242.17	51,984.18	22,332.88	10,223.08		2
3,198,190.73	4,140,390.39	2,517,123.63	2,320,688.88	1,488,143.26	1,104,074.57	801,983.62		
						373,711.15	1,293,276.40	3
1,966,398.99	2,031,140.45	1,264,757.41	1,477,469.33	552,823.85	355,482.77	230,746.14		4
593,707.97	652,729.13	466,531.27	395,971.62	319,630.49	312,272.40	213,657.22		5
						240,591.86	1,026,867.98	
848,248.03	930,027.99	614,680.84	727,880 21	631,677.91	545,558.62	378,302.03		6
601,037.63	593,228.42	283,906.10	250,964.19	89,167.25	45,392.80	20,034.84		7
509,020.06	471,928.58	222,285.70	220,308.61	55,300.99	54,258.51	25,518.98		8
						31,508.05	56,561.11	
295,955.39	312,124.48	160,769.56	120,217.12	62,882.94	33,052.86	11,621.63		9
426,217.09	663,998.92	623,159.04	429,589.65	377,065.10	284,849.00	219,953.41		
						97,427.40	318,661.97	10
9,272,435.41	10,684,090.19	6,801,074.68	6,329,060.67	3,761,004.95	2,792,302.71	2,708,014.29	2,752,215.87	
1,588,146.49	2,015,966.88	1,975,597.95	1,913,632.97	1,673,968.46	1,215,696.78	1,380,972.88	1,476,157.49	1
195,060.36	174,377.31	126,252.53	53,966.19	57,741.26	52,055.65	55,764.37	68,625.86	2
227,276.62	218,703.28	121,679.83	114,092.60	103,442.62	241,830.96	221,931.11	246,199.01	3
180,738.11	166,505.69	116,810.48	114,785.34	94,569.34	90,644.87	97,651.76	108,977.90	4
105,254.53	96,746.57	71,956.70	44,792.13	48,489.90	41,586.53	35,844.11	37,857.13	5
346,038.01	246,686.97	227,372.79	158,703.12	227,569.14	146,265.33	139,120.57	128,346.39	6
2,642,514.12	2,918,987.30	2,639,670.28	2,399,972.35	2,205,720.72	1,788,080.12	1,931,284.80	2,066,163.80	

D.—COMPARATIVE TABLE SHOWING THE AGGREGATE RECEIPTS OF

	DISTRICTS.	FISCAL YEAR ENDED JUNE 30—					
		1877.	1878.	1879.	1880.	1881.	1882.
	LOUISIANA.						
1	First (73)	$495, 938. 37					
1	First (74)	74, 978. 98	$850, 641. 46	$588, 595. 99	$712, 049. 65	$760, 618. 92	$918, 899. 19
2	Second (73)	40, 368. 07					
3	Third (73)	15, 154. 83					
4	Fourth (75)						
	Total	626, 440. 25	850, 641. 46	588, 595. 99	712, 049. 65	760, 618. 92	918, 899. 19
	MAINE.						
1	First (50)	8, 388. 43					
1	First (76)	44, 939. 25					
1	First (77)		70, 695. 78	75, 531. 22	76, 767. 87	82, 457. 05	85, 259. 83
2	Second (5)						
2	Second (78)	6, 083. 66					
3	Third (5)						
4	Fourth (5)						
4	Fourth (79)	20, 209. 55					
5	Fifth (5)						
	Total	79, 620. 89	70, 695. 78	75, 531. 22	76, 767. 87	82, 457. 05	85, 259. 83
	MARYLAND.						
1	First (80)						
1	First (81)	137, 573. 22					
2	Second (80)						
3	Third (5)						
3	Third (82)	468, 750 58					
3	Third (51)	1, 902, 760. 48	2, 210, 127. 20	2, 163, 034. 34	2, 263, 283. 80	2, 334, 864. 22	2, 662, 009. 47
3	Third (83)						
4	Fourth (39)	106, 161. 82	110, 667. 95	103, 637. 81	130, 673. 21	148, 590. 19	160, 228. 81
5	Fifth (5)						
6	Sixth (84)						
	Total	2, 705, 246. 10	2, 320, 795. 24	2, 266, 672. 15	2, 393, 957. 01	2, 483, 463. 41	2, 822, 238. 28
	MASSACHUSETTS.						
1	First (85)						
1	First (86)	5, 274. 81					
2	Second (85)						
3	Third (85)						
3	Third (86)	273, 685. 17					
3	Third (87)	1, 079, 507. 42	1, 249, 066. 42	1, 190, 589. 30	1, 398, 983. 60	1, 454, 636. 28	1, 601, 844. 13
3	Third (88)						
3	Third (89)						
4	Fourth (85)						
5	Fifth (85)						
5	Fifth (90)	977, 563. 80	863, 940. 71	903, 183. 77	850, 147. 57	857, 447. 12	933, 919. 13
6	Sixth (85)						
7	Seventh (85)						
8	Eighth (85)						
8	Eighth (91)	15, 980. 91					
9	Ninth (85)						
10	Tenth (85)						
10	Tenth (91)	142, 108. 55					
10	Tenth (92)	174, 605. 90	311, 356. 64	341, 895. 50	386, 521. 93	387, 597. 80	401, 595. 81
	Total	2, 668, 726. 56	2, 424, 363. 77	2, 435, 668. 66	2, 635, 653. 10	2, 699, 681. 20	2, 937, 359. 07
	MICHIGAN.						
1	First (1)	855, 985. 19					
1	First (93)	455, 909. 53	1, 181, 405. 38	1, 219, 698. 67	1, 099, 764. 17	1, 223, 504. 44	1, 362, 945. 87
1	First (72)						
2	Second (94)	12, 854. 92					
3	Third (94)	62, 143. 20					
3	Third (95)	203, 571. 46	195, 383. 22	190, 913. 58	226, 719. 39	249, 175. 12	273, 718. 46
4	Fourth (71)	95, 223. 32	98, 822. 73	111, 128. 68	131, 709. 28	137, 251. 82	164, 576. 96
4	Fourth (72)						
5	Fifth (1)	19, 376. 38					
6	Sixth (71)	116, 818. 00	127, 192. 01	132, 302. 41	153, 505. 15	177, 343. 89	201, 949. 76
	Total	1, 821, 882. 00	1, 602, 803. 34	1, 654, 043. 34	1, 611, 757. 99	1, 787, 275. 27	2, 003, 191. 05

INTERNAL REVENUE IN EACH COLLECTION DISTRICT, ETC.—Continued.

FISCAL YEAR ENDED JUNE 30—							Total.	
1883.	1884.	1885.	1886.	1887.	1888.	1889.		
							$27,682,754.97	1
$738,666.46	$560,184.89	$538,814.89	$552,115.30	$543,748.98			6,839,314.71	1
							2,762,668.63	2
							2,382,742.35	3
					$603,915.11	$632,009.26	1,235,924.37	4
738,666.46	560,184.89	538,814.89	552,115.30	543,748.98	603,915.11	632,009.26	40,903,405.03	
							6,549,034.40	
							44,939.25	1
72,893.32	56,599.19	53,950.16	57,800.79	50,286.45			682,241.66	
							3,078,527.32	
							22,456.95	2
							1,882,523.48	3
							1,362,941.93	
							30,986.89	4
							1,011,352.41	5
72,893.32	56,599.19	53,950.16	57,800.79	50,286.45			14,665,004.29	
							1,224,024.78	
							3,468,210.31	1
							6,057,607.91	2
							36,372,814.55	
							1,457,270.90	
3,289,962.73	212,697.56						17,128,739.89	3
	2,924,105.72	2,774,384.20	2,462,092.46	2,875,597.06			11,036,179.44	
139,190.01	9,687.87						3,807,961.31	4
							4,547,983.15	5
					3,389,877.19	3,986,928.18	7,376,305.37	6
3,429,152.74	3,146,491.15	2,774,384.20	2,462,092.46	2,875,597.06	3,389,877.19	3,986,928.18	92,477,706.61	
							8,435,385.40	
							97,376.94	1
							11,057,987.58	2
							43,872,869.63	
							1,940,672.72	
1,508,116.79	118,393.43						9,601,137.46	3
	1,918,679.78	1,970,723.02	1,958,576.15	2,113,980.22			7,961,959.17	
					2,580,071.78	2,424,536.26	5,004,608.04	
							21,553,031.83	4
							12,378,319.84	5
861,060.58	65,722.22						7,580,444.74	
							18,516,298.94	6
							14,005,247.21	7
							14,164,119.06	8
							104,050.07	
							7,601,464.94	9
							13,066,460.27	
384,484.60	293,794.62	316,730.94	334,102.68	357,150.78			558,197.92	10
							3,869,837.20	
2,753,661.97	2,396,590.05	2,287,453.96	2,292,678.83	2,471,131.00	2,580,071.78	2,424,536.26	201,190,368.96	
							22,053,608.84	
1,251,409.52	86,524.53						7,881,162.11	1
	1,120,987.45	1,350,464.20	1,479,883.10	1,590,882.20	1,566,807.79	1,752,041.15	8,867,065.89	
							2,108,088 21	2
							2,894,907.09	
244,970.27	14,860.90						1,599,312.40	3
169,912.55	15,186.00						2,731,401.32	
	165,007.95	171,690.96	192,111.35	211,025.17	207,511.22	210,356.44	1,157,793.09	4
							1,189,892.79	5
216,159.35	16,724.14						4,129,323.19	6
1,882,451.69	1,419,380.97	1,528,155.16	1,671,994.45	1,801,907.37	1,774,319.01	1,962,397.59	54,612,614.93	

D.—COMPARATIVE TABLE SHOWING THE AGGREGATE RECEIPTS OF

	DISTRICTS.	FISCAL YEAR ENDED JUNE 30—					
		1863.	1864.	1865.	1866.	1867.	1868.
	MINNESOTA.						
1	First (71)	$21,997.94	$33,703.85	$88,438.56	$119,585.30	$154,379.48	$112,102.89
2	Second (71)	37,563.33	53,996.67	168,286.22	262,325.77	297,724.94	256,287.83
	Second (96)						
	Total	59,561.27	87,700.52	256,724.78	381,911.07	452,104.42	368,390.72
	MISSISSIPPI.						
1	First (97)				116,626.84	853,240.75	576,107.12
	First (98)						
	First (99)						
2	Second (97)				538,677.28	2,046,222.42	2,008,250.08
	Second (98)						
3	Third (97)				125,956.93	1,683,719.60	1,167,515.28
	Total				781,261.03	4,583,182.77	3,751,872.48
	MISSOURI.						
1	First (39)	912,216.50	2,511,846.87	4,290,395.05	6,068,292.52	4,784,413.32	3,499,997.95
	First (100)						
	First (101)						
2	Second (39)	29,641.69	124,699.55	254,140.32	208,668.85	125,381.13	133,880.95
3	Third (94)	242,467.71	670,904.15	751,782.14	400,233.81	549,769.98	387,776.46
4	Fourth (94)			183,985.19	286,812.53	454,954.67	363,761.91
	Fourth (102)						
5	Fifth (a) (71)				130,630.74	128,799.18	151,791.27
6	Sixth (71)				395,269.78	450,777.25	376,152.48
	Sixth (103)						
	Total	1,184,325.90	3,307,450.57	5,480,303.60	7,489,908.23	6,494,095.53	4,913,361.02
	NEW HAMPSHIRE.						
1	First (109)	155,918.09	364,036.54	718,286.70	1,094,540.83	938,976.93	598,859.67
	First (110)						
2	Second (109)	223,007.17	517,618.60	1,431,834.58	1,878,220.14	1,543,956.71	1,137,396.02
3	Third (109)	104,766.83	192,612.14	394,660.44	507,587.77	399,213.56	205,237.76
4	Fourth (111)						
	Total	483,692.09	1,074,267.28	2,544,781.72	3,480,348.74	2,882,147.20	1,941,493.45
	NEW JERSEY.						
1	First (112)	94,555.94	242,785.19	626,288.54	773,408.30	549,897.25	341,048.46
	First (113)						
2	Second (112)	131,345.07	302,729.91	822,915.63	829,607.56	797,139.52	492,758.92
3	Third (35)	171,637.12	701,759.31	990,509.31	1,294,315.61	1,331,421.95	886,081.19
4	Fourth (5)	148,107.66	358,626.48	947,866.36	1,510,457.54	990,119.41	632,253.16
5	Fifth (5)	681,798.31	1,510,457.27	4,201,730.48	5,784,177.81	4,221,684.48	3,343,063.49
	Fifth (114)						
	Fifth (115)						
	Total	1,227,444.10	3,116,358.16	7,589,310.32	10,191,966.82	7,890,262.61	5,695,200.22
	NEW YORK.						
1	First (117)	129,577.34	651,552.47	1,271,852.46	1,567,312.79	1,273,134.43	891,482.82
	First (118)						
2	Second (117)	484,930.42	1,346,914.61	2,115,298.86	3,084,574.53	2,659,707.08	2,695,527.53
	Second (119)						
	Second (120)						
3	Third (117)	474,705.87	2,006,217.25	3,124,929.82	4,613,454.39	3,305,285.56	2,622,661.23
	Third (121)						
	Third (120)						
4	Fourth (117)	1,160,692.99	3,085,128.13	6,279,699.60	9,169,375.47	5,918,297.34	4,063,773.63
	Fourth (122)						
5	Fifth (117)	326,100.10	693,651.96	1,575,625.20	2,057,071.97	1,656,880.83	1,072,463.42
6	Sixth (117)	466,422.41	1,550,725.43	3,180,605.90	4,795,244.74	4,183,863.23	2,587,363.03
7	Seventh (117)	315,515.43	518,454.92	1,279,297.67	1,834,889.63	1,535,954.23	1,181,146.07
8	Eighth (123)	548,538.14	2,203,436.34	5,113,031.14	7,886,484.09	7,149,716.75	4,074,416.26
9	Ninth (123)	249,385.95	580,449.70	1,486,443.31	1,942,777.49	1,971,424.75	1,737,724.94
10	Tenth (5)	163,663.16	584,042.04	1,348,416.66	1,717,845.97	1,454,924.88	931,625.38
11	Eleventh (5)	146,162.89	323,686.22	777,300.56	953,283.17	813,694.30	302,717.79
	Eleventh (124)						

INTERNAL REVENUE IN EACH COLLECTION DISTRICT, ETC.—Continued.

FISCAL YEAR ENDED JUNE 30—								
1869.	1870.	1871.	1872.	1873.	1874.	1875.	1876.	
$122,816.27	$145,641.44	$89,866.41	$69,923.80	$69,351.50	$75,429.17	$76,910.11	$87,444.24	1
240,521.53	322,237.71	162,716.57	179,055.63	162,053.44	151,926.38	151,452.34	161,331.94	2
363,337.80	467,879.15	252,582.98	248,979.43	231,404.94	227,355.55	228,362.45	248,776.18	
57,321.70	96,216.68	56,804.33	16,499.01	32,102.34	17,166.47	6,167.24		1
						33,311.42	47,162.34	
88,730.44	120,384.40	129,938.54	64,306.84	49,865.07	62,397.50	23,920.64	468.48	2
						23,292.07	37,455.16	
48,077.33	68,191.41	51,514.56	52,869.59	46,111.90	28,055.14	10,276.56	79.46	3
194,129.47	284,792.49	238,257.43	133,675.44	128,079.31	107,619.11	96,967.92	85,165.44	
3,931,156.29	4,590,339.97	3,780,558.95	3,683,479.33	3,323,795.53	3,501,668.88	3,739,490.09	2,216,996.19	1
77,907.21	128,123.38	84,811.99	81,712.88	100,750.96	78,687.84	73,852.18	64,169.71	2
312,892.22	278,351.07	272,094.91	159,735.59	110,562.51	98,481.66	124,791.39	124,014.63	3
280,512.50	234,587.28	247,031.66	224,419.81	208,442.06	188,489.30	227,470.81	260,027.09	4
183,289.28	155,322.05	206,565.75	146,388.22	112,209.33	110,103.57	129,075.94	114,348.36	5
510,047.03	617,564.36	504,012.63	322,482.68	394,559.76	342,054.80	300,194.90	202,355.53	6
5,295,804.53	6,004,278.11	5,095,075.89	4,618,218.51	4,259,320.15	4,325,486.05	4,594,875.31	2,981,941.51	
232,480.47	223,750.85	160,358.80	175,337.75	200,387.70	171,892.66	210,880.80	93,697.18	1
							148,223.80	
316,744.99	304,053.63	185,420.95	99,181.75	104,918.85	58,272.87	68,076.07	13,382.79	2
102,122.56	104,602.90	51,147.22	29,716.46	20,148.81	18,513.66	20,432.08	4,957.51	3
								4
651,348.02	632,407.38	396,926.97	304,235.96	325,455.36	248,679.19	209,389.55	260,261.28	
344,489.36	201,207.12	136,787.10	114,590.67	139,553.31	117,992.48	118,544.77	43,661.55	1
							106,961.24	
411,037.05	460,752.72	401,652.91	191,543.24	273,948.36	118,159 04	201,307.14	62,766.01	2
581,925.49	750,817.28	443,773.44	561,833.84	526,359.72	279,787.19	346,775.19	274,168.15	3
536,019.90	509,700.62	302,565.46	292,529.05	341,587.24	195,426.46	223,940.17	99,777.06	4
1,918,889.81	2,152,882.11	1,173,821.35	1,330,937.01	1,285,993.74	1,014,201.56	1,472,902.14	1,369,462.69	5
							1,823,152.58	
3,792,361.61	4,075,359.85	2,458,600.26	2,491,433.81	2,567,442.37	1,725,626.73	2,363,469.41	3,779,949.88	
681,369.99	576,877.68	489,528.51				*.01		1
		1,644,655.56	4,493,363.05	4,029,458.55	3,738,344.34	3,722,678.15	3,210,107.73	
2,378,656.50	2,700,283.28	1,601,283.15						2
		1,135,829.91	3,084,597.69	2,433,782.46	1,921,752.54	1,707,741.34	1,155,451.65	
1,908,556.50	2,160,008.07	695,974.34						3
		580,661.84	2,084,547.32	1,961,195.36	1,798,897.10	2,034,570.54	2,266,062.61	
3,287,224.06	3,598,119.65	1,891,215.64				*10.50		4
					402,928.47	1,292,629.36	1,412,911.87	
803,044.26	950,705.04	614,866.54						5
1,814,038.69	1,832,584.74	1,073,427.36				*436.91		6
1,290,258.54	1,362,408.71	806,528.25				*.03		7
4,336,059.06	3,462,624.00	3,648,437.70	2,207,632.27	802,156.96	178,522.76	*.03		8
1,678,841.75	1,759,617.19	1,618,556.21	1,353,618.79	1,007,992.39	631,157.86	*.03		9
686,192.25	857,935.16	771,611.35	458,995.05	529,219.27	287,156.52	273,118.98	143,338.28	10
303,140.27	238,071.62	205,725.54	136,768.02	156,637.68	76,293.88	131,660.17	48,514.36	11
							80,590.03	

D.—COMPARATIVE TABLE SHOWING THE AGGREGATE RECEIPTS OF

	DISTRICTS.	FISCAL YEAR ENDED JUNE 30—					
		1877.	1878.	1879.	1880.	1881.	1882.
	MINNESOTA.						
1	First (71)	$84,777.07	$99,569.03	$93,850.49	$107,389.53	$116,126.82	$125,071.40
2	Second (71)	154,684.63	175,433.72	211,858.27	257,300.11	329,013.51	403,420.54
	Second (96)						
	Total	239,461.70	275,002.75	305,708.76	364,689.64	445,140.33	528,491.94
	MISSISSIPPI.						
	First (97)						
1	First (98)	45,362.55					
	First (99)		86,824.03	87,271.68	91,233.50	96,122.19	94,098.90
	Second (97)						
2	Second (98)	32,700.75					
3	Third (97)						
	Total	78,063.30	86,824.03	87,271.68	91,233.50	96,122.19	94,098.90
	MISSOURI.						
	First (39)	3,746,597.46	4,338,756.96	4,374,813.80	4,680,266.14	5,543,333.70	6,186,922.72
1	First (100)						
	First (101)						
2	Second (39)	53,693.41	55,056.05	57,035.72	61,635.57	66,451.05	65,405.90
3	Third (94)	31,273.37					
	Fourth (94)	49,545.44					
4	Fourth (102)	244,184.17	314,274.08	280,062.47	332,996.58	388,170.56	501,833.39
5	Fifth (a) (71)	115,516.86	113,138.12	105,566.04	118,826.24	145,571.72	153,736.48
6	Sixth (71)	209,257.02	250,008.21	209,328.45	255,929.55	326,822.36	634,589.47
	Sixth (103)						
	Total	4,450,067.73	5,071,233.42	5,026,806.48	5,449,654.08	6,470,349.89	7,542,487.94
	NEW HAMPSHIRE.						
1	First (109)						
	First (110)	234,998.99	228,188.11	222,898.88	278,139.08	309,720.94	349,942.04
2	Second 109)						
3	Third (109)						
4	Fourth (111)						
	Total	234,998.99	228,188.11	222,898.88	278,139.08	309,720.94	349,942.04
	NEW JERSEY.						
1	First (112)						
	First (113)	275,913.95	223,590.29	224,171.23	214,500.00	288,810.32	305,040.48
2	Second (112)						
3	Third (35)	330,142.80	358,587.75	320,093.82	266,338.62	326,683.57	459,988.40
4	Fourth (5)						
	Fifth (5)						
5	Fifth (114)	4,381,904.15	4,513,147.15	4,125,950.09	3,726,969.19	4,258,182.42	4,686,604.72
	Fifth (115)						
	Total	4,987,960.90	5,095,325.19	4,670,215.14	4,207,807.81	4,873,676.31	5,451,633.60
	NEW YORK.						
1	First (117)						
	First (118)	3,355,097.12	3,692,507.68	3,513,417.90	3,264,352.96	2,959,673.22	2,984,084.80
	Second (117)						
2	Second (119)	1,262,394.10					
	Second (120)		2,781,903.32	2,915,918.49	3,199,990.87	3,377,659.78	4,206,252.54
	Third (117)						
3	Third (121)	2,216,546.34					
	Third (120)		3,895,193.88	4,282,837.07	5,064,296.32	5,757,541.95	6,762,211.18
	Fourth (117)						
4	Fourth (122)	1,567,463.73					
5	Fifth (117)						
6	Sixth (117)						
7	Seventh (117)						
8	Eighth (123)						
9	Ninth (123)						
10	Tenth (5)						
11	Eleventh (5)						
	Eleventh (124)	184,372.14	133,502.11	178,254.82	132,036.24	208,236.50	180,625.31

INTERNAL REVENUE IN EACH COLLECTION DISTRICT, ETC.—Continued.

FISCAL YEAR ENDED JUNE 30—							Total.	
1883.	1884.	1885.	1886.	1887.	1888.	1889.		
$117,842.58	$8,803.22						$2,021,021.10	1
417,619.38	38,493.69						4,505,304.15	
	446,685.14	$492,704.97	$534,532.31	$554,088.98	$510,492.15	$1,377,796.84	3,916,300.39	2
535,461.96	493,982.05	492,704.97	534,532.31	554,088.98	510,492.15	1,377,796.84	10,532,625.64	
							1,828,252.48	
							125,836.31	1
60,479.64	50,449.53	47,951.13	47,062.35	42,608.16			704,101.11	
							5,133,161.67	2
							93,447.98	
							3,282,367.75	3
60,479.64	50,449.53	47,951.13	47,062.35	42,608.16			11,167,167.30	
6,200,677.64	362,213.97						86,268,230.73	
	4,033,213.56	5,011,585.72	5,636,492.57	6,227,290.00			21,508,581.85	1
					6,583,171.14	6,449,977.94	13,033,149.08	
60,286.65	2,897.67						1,988,920.66	2
							4,524,131.60	3
							3,210,040.25	
388,953.87	266,823.99	303,281.89	351,560.87	329,884.70			3,702,026.57	4
131,482.26	7,883.10						2,466,244.49	5
899,010.98	109,528.08						7,309,935.32	6
	1,091,246.14	961,298.24	1,072,598.55	1,301,614.57	1,326,912.43	1,280,630.26	7,034,300.19	
7,680,411.40	6,473,806.51	6,276,165.85	7,060,651.99	7,858,789.27	7,910,083.57	7,730,608.20	151,045,560.74	
							5,339,404.97	
352,998.08	390,136.72	383,478.83	378,787.72	377,562.37			3,655,075.56	1
							7,882,085.72	2
							2,155,719.70	3
					466,994.36	469,351.54	936,345.90	4
352,998.08	390,136.72	383,478.83	378,787.72	377,562.37	466,994.36	469,351.54	19,968,631.85	
							3,844,810.04	
275,723.41	131,132.39	221,046.66	191,739.69	208,162.23	148,082.84	137,414.01	2,952,288.74	1
							5,497,658.68	2
486,631.30	487,717.62	479,703.13	349,697.47	647,110.60			13,653,859.87	3
							7,088,976.57	4
							31,462,062.25	
4,662,103.07	2,858,372.71	2,960,608.96	3,410,238.59	3,740,888.73			45,148,122.36	5
					3,924,163.64	4,182,204.57	8,106,368.21	
5,424,457.78	3,477,222.72	3,661,358.75	3,951,675.75	4,596,161.50	4,072,246.48	4,319,618.58	117,754,146.72	
							7,532,688.50	
2,802,941.66	2,685,803.96	2,840,456.10	3,046,409.05	3,208,195.07	3,384,638.73	3,525,693.10	62,071,877.73	1
							19,067,176.26	
							12,701,549.69	2
3,624,441.53	1,576,683.43	1,502,773.28	1,532,049.70	1,539,034.98	1,569,587.68	1,590,296.47	28,816,592.07	
							20,911,793.03	
							12,942,481.11	3
6,735,929.67	4,955,927.46	5,057,715.43	5,366,748.85	5,572,258.80	5,601,823.00	5,677,380.27	64,729,863.88	
							38,453,537.01	
							4,675,933.43	4
							9,780,409.32	5
							21,484,712.43	6
							10,124,453.48	7
							41,611,055.50	8
							16,017,989.93	9
							10,208,105.95	10
							4,613,746.47	
169,700.96	10,573.85						1,277,881.96	11

D.—COMPARATIVE TABLE SHOWING THE AGGREGATE RECEIPTS OF

	DISTRICTS.	FISCAL YEAR ENDED JUNE 30—					
		1863.	1864.	1865.	1866.	1867.	1868.
	NEW YORK—continued.						
12	Twelfth (5)	$214,111.87	$434,449.14	$893,370.77	$1,240,445.27	$1,121,742.96	$550,492.68
	Twelfth (125)						
13	Thirteenth (5)	91,460.05	197,588.06	454,256.91	547,477.35	433,672.16	341,510.67
14	Fourteenth (5)	564,674.22	1,428,503.60	2,515,278.46	3,274,886.18	2,990,590.08	1,346,583.72
	Fourteenth (126)						
	Fourteenth (127)						
	Fourteenth (128)						
15	Fifteenth (5)	262,832.80	571,510.48	1,299,510.80	1,640,872.52	1,341,439.34	815,969.67
	Fifteenth (129)						
	Fifteenth (127)						
16	Sixteenth (5)	45,898.12	101,540.46	331,996.24	350,622.43	294,094.91	125,179.59
17	Seventeenth (5)	45,425.09	82,979.67	178,290.61	239,060.08	189,900.03	141,425.23
18	Eighteenth (5)	170,099.73	423,870.21	965,781.07	1,000,355.07	732,275.54	407,265.43
19	Nineteenth (5)	66,530.93	128,200.57	265,577.27	366,129.66	281,070.64	198,701.93
20	Twentieth (5)	130,699.46	309,675.81	512,888.14	657,049.08	527,989.23	318,897.66
	Twentieth (130)						
21	Twenty-first (5)	174,797.78	393,305.86	721,848.22	1,223,574.63	1,187,196.21	772,243.44
	Twenty-first (131)						
	Twenty-first (132)						
	Twenty-first (133)						
22	Twenty-second (5)	137,200.35	483,753.73	525,063.68	543,657.99	500,426.85	257,379.42
23	Twenty-third (5)	313,926.50	959,832.96	1,164,444.28	1,650,566.98	1,086,564.00	451,860.06
24	Twenty-fourth (5)	154,527.22	850,408.91	686,933.96	704,979.51	779,125.81	522,197.66
	Twenty-fourth (134)						
25	Twenty-fifth (135)	60,800.24	388,853.87	361,898.69	412,812.55	335,063.91	222,114.84
26	Twenty-sixth (5)	87,748.76	190,112.22	395,873.07	549,767.42	488,136.15	317,419.24
	Twenty-sixth (136)						
27	Twenty-seventh (137)	94,402.73	186,083.73	415,818.51	513,754.67	431,288.10	325,019.02
	Twenty-seventh (138)						
28	Twenty-eighth (135)	174,509.13	582,376.26	1,101,694.61	1,460,030.10	1,099,644.38	709,028.60
	Twenty-eighth (139)						
	Twenty-eighth (140)						
	Twenty-eighth (141)						
29	Twenty-ninth (5)	110,212.25	390,266.72	400,569.85	563,324.98	524,948.55	323,746.40
30	Thirtieth (5)	445,650.13	1,876,637.40	1,971,268.10	2,601,808.24	2,276,202.92	1,168,150.17
	Thirtieth (142)						
	Thirtieth (140)						
31	Thirty-first (137)	50,849.15	120,729.71	263,009.79	391,862.07	302,289.51	248,847.93
32	Thirty-second (143)	1,378,961.39	3,571,282.18	10,730,410.95	12,167,237.82	9,978,614.40	7,669,852.59
	Total	9,241,038.60	27,215,720.62	53,708,375.16	71,922,529.11	58,825,159.06	39,395,787.64
	NORTH CAROLINA.						
1	First (5)				69,585.16	85,092.18	97,154.32
2	Second (5)				53,475.16	719,405.08	539,589.65
	Second (144)						
3	Third (145)				291,346.73	251,900.25	405,550.17
4	Fourth (145)					210,680.29	303,391.22
	Fourth (146)						
	Fourth (147)						
	Fourth (148)						
	Fourth (44)						
5	Fifth (149)					139,561.11	333,757.89
	Fifth (147)						
	Fifth (44)						
6	Sixth (150)					209,363.57	261,898.82
	Sixth (151)						
	Sixth (152)						
7	Seventh (150)					32,749.87	35,943.58
	Total				414,407.05	1,648,752.35	1,977,285.65
	OHIO.						
1	First (7)	838,064.63	1,781,204.66	3,406,204.43	8,022,216.20	6,878,016.03	3,781,726.35
	First (153)						
	First (154)						
2	Second (7)	593,195.06	2,357,578.85	2,213,916.38	2,806,962.75	2,374,409.46	1,183,519.56
3	Third (39)	266,260.76	1,531,136.00	1,366,816.24	1,610,853.82	1,214,737.95	718,033.49
4	Fourth (5)	1,215.76	587,279.23	648,728.77	1,173,253.96	654,166.04	166,220.65
	Fourth (155)						
5	Fifth (5)	47,837.75	121,605.16	186,246.53	461,917.48	244,265.89	91,802.04
6	Sixth (39)	54,075.72	523,685.17	295,389.86	383,881.09	363,989.81	183,994.63
	Sixth (156)						

INTERNAL REVENUE IN EACH COLLECTION DISTRICT, ETC.—Continued.

FISCAL YEAR ENDED JUNE 30—								
1869.	1870.	1871.	1872.	1873.	1874.	1875.	1876.	
$416,193.82	$411,329.36	$236,119.98	$255,761.04	$260,785.63	$192,893.25	$192,836.98	$90,462.76	12
							228,330.10	
201,359.35	191,179.79	235,189.56	95,012.48	119,639.13	78,544.63	93,276.79	33,682.07	13
1,265,066.98	1,406,228.34	1,094,693.94	911,501.49	1,242,623.17	496,426.13	528,579.51	255,525.44	
							337,319.24	14
810,843.25	627,537.54	377,518.74	306,567.33	226,780.20	188,170.63	200,225.56	90,874.12	
							145,409.80	15
117,266.77	106,005.52	54,122.99	41,786.77	30,924.33	21,458.58	20,945.52	6,334.05	16
93,420.42	103,239.18	41,512.83	31,027.53	30,515.32	22,656.42	24,147.43	8,424.45	17
308,285.38	274,455.58	125,221.62	193,025.71	119,447.73	65,522.35	65,519.99	20,732.93	18
106,278.96	110,463.06	101,340.63	40,485.87	44,244.36	27,341.14	24,821.60	11,061.58	19
206,433.67	165,134.77	119,384.01	88,365.23	54,500.22	46,562.54	51,867.46	13,871.83	
							45,367.05	20
557,292.28	611,902.79	447,576.95	403,417.09	294,446.82	296,013.56	324,629.34	170,262.19	
							202,575.21	21
175,998.74	599,577.98	667,758.11	404,249.39	103,207.28	36,522.86	36,793.39	12,999.14	22
554,227.04	779,029.19	439,304.66	425,425.22	412,925.26	234,265.79	258,888.06	130,299.24	23
455,807.50	586,786.17	420,488.72	448,831.73	483,655.08	573,567.29	428,357.01	239,928.48	
							382,146.12	24
231,041.03	296,128.52	110,119.51	61,118.87	114,755.69	60,331.93	49,339.31	15,460.96	25
263,348.74	272,754.82	187,985.46	177,912.53	173,785.96	185,051.81	203,135.73	110,134.34	
							120,102.51	26
222,264.81	228,276.55	170,384.29	128,330.46			*.04		
			28,722.77	157,384.42	150,716.05	158,289.44	159,221.82	27
759,328.44	560,721.54	666,884.63	487,693.67	576,558.71	435,218.10	452,644.96	164,702.69	
							380,567.26	28
238,165.95	270,327.23	97,300.95	68,561.86	80,609.08	52,036.39	55,808.81	19,792.21	29
1,789,105.67	2,315,449.95	1,926,884.09	1,753,960.76	1,541,746.87	1,340,034.21	1,231,836.88	593,071.27	
							590,085.74	30
103,023.90	100,000.86	58,410.18	38,935.60			*.50		31
7,674,297.31	6,865,786.50	4,483,898.31	3,303,483.59	2,230,437.59	1,643,375.49	1,674,091.42	1,720,403.36	32
35,716,423.18	36,361,550.38	28,870,402.06	23,483,729.18	19,219,504.52	15,182,362.62	15,238,881.81	14,616,723.99	
30,681.40	60,040.82	63,716.60	20,215.15	38,892.73	21,483.44	19,864.60	4,602.26	1
100,473.58	94,791.47	88,064.21	44,273.39	57,244.85	67,773.05	37,216.63	11,621.84	
							45,272.85	2
49,727.92	27,955.10	44,829.70	53,206.88	33,868.86	29,860.96	32,186.05	10,748.05	3
143,264.93	419,999.86	410,578.46	373,235.68	449,684.85	560,054.31	586,896.09	407,226.94	
							305,220.37	4
280,836.83	524,232.96	502,825.56	298,663.81	543,251.86	604,157.20	685,603.47	628,966.35	5
123,665.87	235,321.59	225,330.56	199,044.47	252,126.40	229,633.90	220,299.95	217,711.11	6
21,885.45	35,478.15	26,923.10	19,885.41	33,252.17	32,768.38	48,356.79	39,768.52	7
750,535.98	1,398,719.95	1,362,268.19	1,108,524.79	1,408,321.72	1,485,731.24	1,630,423.58	1,671,138.29	
4,133,733.74	2,406,377.88	1,398,809.17						
		1,521,173.59	6,072,487.83	7,161,277.20	7,208,887.51	8,055,517.74	9,833,011.52	1
2,955,385.06	4,846,979.34	3,053,069.30						2
1,722,965.73	2,369,580.82	2,393,859.26	1,697,785.31	1,495,458.80	1,645,558.53	949,819.40	1,276,079.90	3
638,683.78	981,033.19	760,851.02	712,865.88	699,070.56	699,953.90	489,528.86	248,461.98	
							268,642.01	4
181,700.38	265,215.33	255,182.80	254,067.75	64,737.83	154,664.81	51,065.63	21,705.65	5
654,946.98	963,994.86	720,112.72	721,460.39	625,625.11	665,040.77	610,346.16	623,050.06	6

D.—COMPARATIVE TABLE SHOWING THE AGGREGATE RECEIPTS OF

	DISTRICTS.	FISCAL YEAR ENDED JUNE 30—					
		1877.	1878.	1879.	1880.	1881.	1882.
	NEW YORK—continued.						
12	Twelfth (5)						
	Twelfth (125)	$468,727.34	$469,527.12	$482,916.92	$519,719.66	$545,067.54	$627,261.92
13	Thirteenth (5)						
14	Fourteenth (5)						
	Fourteenth (126)	591,488.79	631,918.26	571,915.15	571,102.97	600,482.13	626,596.47
	Fourteenth (127)						
	Fourteenth (128)						
15	Fifteenth (5)						
	Fifteenth (129)	229,805.43	211,125.88	214,694.26	259,026.63	294,733.58	346,397.30
	Fifteenth (127)						
16	Sixteenth (5)						
17	Seventeenth (5)						
18	Eighteenth (5)						
19	Nineteenth (5)						
20	Twentieth (5)						
	Twentieth (130)	9,652.33					
21	Twenty-first (5)						
	Twenty-first (131)	74,408.78					
	Twenty-first (132)	263,792.83	330,589.76	327,467.09	309,412.51	326,846.08	333,264.94
	Twenty-first (133)						
22	Twenty-second (5)						
23	Twenty-third (5)						
24	Twenty-fourth (5)						
	Twenty-fourth (134)	645,672.58	629,363.12	706,144.85	422,403.27	494,109.45	469,857.05
25	Twenty-fifth (135)						
26	Twenty-sixth (5)						
	Twenty-sixth (136)	216,372.66	221,368.64	240,257.07	273,432.82	316,088.22	386,560.60
27	Twenty-seventh (137)						
	Twenty-seventh (138)	39,166.70					
28	Twenty-eighth (135)						
	Twenty-eighth (139)	144,996.53					
	Twenty-eighth (140)	547,279.29	827,852.19	813,978.97	946,711.55	974,838.32	1,134,541.13
	Twenty-eighth (141)						
29	Twenty-ninth (5)						
30	Thirtieth (5)						
	Thirtieth (142)	261,261.52					
	Thirtieth (140)	771,281.86	1,126,667.60	1,197,999.40	1,287,401.54	1,377,990.99	1,403,386.85
31	Thirty-first (137)						
32	Thirty-second (143)	1,602,398.50					
	Total	14,452,178.57	14,951,519.56	15,445,801.99	16,249,877.34	17,283,267.76	19,455,040.09
	NORTH CAROLINA.						
1	First (5)						
2	Second (5)						
	Second (144)	109,994.76	65,782.90	77,272.14	58,695.72	74,432.35	62,163.24
3	Third (145)						
4	Fourth (145)						
	Fourth (146)	838,733.88	800,760.70	935,394.78	925,483.18	850,967.45	1,022,309.00
	Fourth (147)						
	Fourth (148)						
	Fourth (44)						
5	Fifth (149)	568,073.11	698,041.92	1,064,463.12	911,908.83	1,051,585.47	1,274,767.96
	Fifth (147)						
	Fifth (44)						
6	Sixth (150)	108,669.27					
	Sixth (151)	131,934.30	253,874.40	336,238.73	457,918.98	499,455.08	508,174.32
	Sixth (152)						
7	Seventh (150)	18,442.67					
	Total	1,775,847.99	1,818,459.92	2,413,368.77	2,354,006.71	2,476,440.35	2,867,414.52
	OHIO.						
1	First (7)						
	First (153)	10,155,663.16	9,728,032.98	10,832,458.61	11,556,840.75	12,538,346.58	11,928,253.84
	First (154)						
2	Second (7)						
3	Third (39)	1,023,611.35	1,125,680.69	966,097.16	1,356,043.19	1,806,871.17	1,621,593.77
4	Fourth (5)						
	Fourth (155)	480,783.15	401,021.46	476,026.88	512,154.48	513,582.86	475,943.53
5	Fifth (5)						
6	Sixth (39)	491,794.52	431,079.69	613,699.78	633,678.60	352,210.02	300,275.33
	Sixth (156)						

INTERNAL REVENUE IN EACH COLLECTION DISTRICT, ETC.—Contin

FISCAL YEAR ENDED JUNE 30—						
1883.	1884.	1885.	1886.	1887.	1888.	1889.
$590,564.93	$48,754.17					
590,677.39	40,028 23					
	595,363.83	$679,724.30	$666,913.20	$684,242.15		
					$1,676,205.65	$1,679,38
336,832.04	24,527.69					
	752,985.81	829,864.60	872,791.41	938,300.82		
325,317.02	17,715.85					
	865,665.04	856,039.34	915,930.93	1,010,372.11	1,084,647.33	1,070,92
559,763.59	41,821.31					
409,330.71	14,831.94					
1,079,296.23	69,640.19					
	1,945,001.69	2,058,072.55	1,964,305.82	2,148,703.10	2,100,300.56	2,104,99
1,342,391.27	115,050.65					
17,967,187.00	13,760,384.10	13,823,644.60	14,365,208.96	15,101,203.03	15,417,202.95	15,648,67
65,319.36	1,192.10					
865,952.10	24,910.26					
	494,852.80	398,003.45	512,854.59	578,161.58		
		254,643.50				
					1,035,053.39	1,134,23
988,991.35	43,819.12					
	711,299.02	477,098.72	841,881.97	945,134.70		
					1,150,115.36	1,332,91
456,864.16	484,887.44	337,707.21	390,222.73	427,405.43		
		219,376.07				
2,377,126.97	1,760,966.74	1,686,828.95	1,744,959.29	1,950,701.71	2,185,168.75	2,467,15
10,577,527.72	9,826,123.39	8,737,143.51	8,501,549.10	7,966,784.95		
					10,202,724.94	9,227,43
1,555,836.26	68,501.48					
181,759.25	7,644.88					
443,683.26	12,298.11					
	1,005,940.16	1,284,728.86	1,803,894.64	2,991,061.28		

D.—COMPARATIVE TABLE SHOWING THE AGGREGATE RECEIPTS OF

	DISTRICTS.	FISCAL YEAR ENDED JUNE 30—					
		1863.	1864.	1865.	1866.	1867.	1868.
	OHIO—continued.						
7	Seventh (157)	$166,485.71	$1,195,306.87	$1,086,116.45	$1,246,198.88	$906,667.98	$504,032.67
	Seventh (158)						
	Seventh (159)						
8	Eighth (157)	40,599.89	119,787.95	135,775.80	215,006.70	160,524.84	116,610.84
9	Ninth (5)	100,968.00	611,049.52	477,423.87	939,624.34	390,452,50	288,654.47
10	Tenth (5)	136,144.01	346,180.92	744,465.66	1,148,313.48	1,059,746.24	863,337.98
	Tenth (160)						
	Tenth (161)						
11	Eleventh (5)	104,933.15	448,262.68	570,146.68	961,169.20	305,721.19	235,172.21
	Eleventh (162)						
	Eleventh (163)						
12	Twelfth (5)	125,171.05	713,325.75	519,316.69	525,663.41	275,891.03	279,894.71
13	Thirteenth (5)	92,373.42	296,709.84	419,145.71	518,940.43	444,591.80	362,043.15
	Thirteenth (164)						
14	Fourteenth (5)	40,000.85	106,081 04	236,442.43	276,029.51	214,048.73	108,222.30
15	Fifteenth (5)	75,851.68	132,830.15	286,963.80	424,797.09	282,827.48	214,260.79
	Fifteenth (165)						
16	Sixteenth (5)	34,149.85	70,006.65	194,886.40	262,450.15	155,502.35	138,542.83
17	Seventeenth (5)	96,262.04	171,345.33	480,790.29	654,626.22	483,680.80	279,702.68
18	Eighteenth (5)	329,070.09	975,255.04	2,303,282.85	3,501,667.83	3,110,339.75	2,507,206.77
	Eighteenth 166)						
	Eighteenth (51)						
	Eighteenth (167)						
19	Nineteenth (5)	74,821.30	135,825.92	450,865.94	598,937.05	382,947.79	201,579.43
	Total	3,217,480.72	12,224,459.73	16,022,024.78	25,732,509.59	19,902,527.66	12,224,617.55
	PENNSYLVANIA.						
1	First (7)	951,791.33	2,177,710.24	5,381,027.84	6,282,663.93	5,082,037.46	4,230,456.54
	First (169)						
	First (170)						
	First (171)						
	First (172)						
2	Second (174)	479,195.78	1,470,577.80	3,244,791.94	4,531,847.15	3,433,508.97	2,053,637.27
	Second (175)						
3	Third (7)	403,398.59	951,463.05	2,250,057.11	2,049,108.11	2,029,733.79	1,125,074.65
4	Fourth (174)	383,688.02	854,348.26	2,478,723.91	3,286,215.37	2,302,558.99	1,693,897.30
5	Fifth (5)	134,912.23	380,703.24	1,119,379.95	1,255,282.81	970,047.60	630,720.87
	Fifth (176)						
6	Sixth (5)	149,729.17	400,670.17	1,197,889.57	1,357,938.54	955,394.41	433,777.99
7	Seventh (177)	190,408.08	442,928.73	851,639.04	925,253 52	711,358.28	429,167.14
8	Eighth (5)	179,714.07	586,572.09	670,007.69	1,020,054.26	671,907.67	334,892.16
	Eighth (178)						
	Eighth (171)						
9	Ninth (177)	82,888.09	207,694.52	819,423.63	1,165,489.55	781,024.49	450,337.79
	Ninth (179)						
	Ninth (171)						
	Ninth (173)						
	Ninth (44)						
10	Tenth (5)	154,525 82	359,307 94	803,359.92	1,138,698.40	610,208.77	378,295.89
11	Eleventh (50)	211,187.28	749,226.69	969,799 55	1,234,206.76	680,469 01	431,367.88
12	Twelfth (5)	190,244.75	392,084.37	888,252.78	1,036,285.56	522,629.57	432,380.90
	Twelfth (180)						
	Twelfth (171)						
	Twelfth (172)						
13	Thirteenth (5)	60,131.55	131,186.10	320,889.18	483,944.38	242,930.28	120,413.14
14	Fourteenth (50)	83,959.77	258,031.17	566,153.54	777,188.76	439,639.03	332,331.98
	Fourteenth (181)						
15	Fifteenth (50)	76,752.28	268,209.55	753,104.99	748,269.08	469,983.68	348,963.39
16	Sixteenth (182)	54,025.04	140,784.25	211,579.69	311,253.83	204,817.63	207,531.73
	Sixteenth (183)						
17	Seventeenth (182)	74,203.00	139,150.93	423,960.61	543,002.85	294,329.14	161,959.45
18	Eighteenth (50)	44,447.57	118,026.76	345,254.64	392,186.89	217,282.98	247,787.76
19	Nineteenth (50)	101,565.88	225,415.01	341,881.69	607,533.22	597,910.56	450,963.27
	Nineteenth (51)						
	Nineteenth (184)						
20	Twentieth (50)	135,862.43	468,102.47	1,075,069.39	3,371,784.53	1,005,847.74	553,068.55
	Twentieth (51)						
21	Twenty first (50)	91,804.08	510,369.71	597,024.50	417,858.94	282,349.95	205,286.63
22	Twenty-second (5)	674,644.21	1,901,742.02	3,475,446.66	4,866,797.46	3,655,008.72	1,986,255.39
	Twenty-second (185)						
	Twenty-second (171)						
	Twenty-second (173)						

INTERNAL REVENUE IN EACH COLLECTION DISTRICT, ETC.—Continued.

FISCAL YEAR ENDED JUNE 30—								
1869.	1870.	1871.	1872.	1873.	1874.	1875.	1876.	
$784,994.11	$1,018,315.24	$718,371.24	$702,177.06	$495,343.53	$744,598.17	$625,175.25	$492,562.19	7
							308,225.82	
83,486.39	140,709.63	43,988.08	35,579.34	31,435.30	33,700.97	42,697.52	25,664.07	8
611,467.14	1,054,304.20	603,544.20	687,044.51	749,461.97	641,945.20	338,537.49	208,541.58	9
883,516.02	1,108,147.13	1,109,678 62	1,218,640.03	1,091,836.75	957,426.61	969,636.15	425,057.07	10
							643,600.69	
587,893.24	925,182.89	414,292.05	612,730.40	575,446.58	556,025.06	805,018.30	402,146.96	11
							486,183.09	
728,003.13	963,791.66	353,519.13	534,748.77	580,975.06	429,839.44	424,423.10	210,946.41	12
260,003.27	382,527.00	258,711.12	91,990.69	69,988.15	64,130.15	73,126.85	32,993.02	13
							77,297.09	
101,268.88	98,916.91	94,612.70	58,874.19	56,144.42	56,103.71	63,875.37	26,763.15	14
112,186.19	140,985.31	102,288.73	92,842.52	93,001.34	82,467.35	85,854.68	43,650.30	15
							88,049.13	
120,110.17	118,297.90	91,713.08	97,129.14	72,540.14	83,154.77	77,905.60	38,249.78	16
242,442.62	285,574.75	249,021.36	351,689.24	204,827.07	103,987.34	111,127.37	37,141.28	17
1,161,617.24	1,339,397.63	916,707.11	890,914.79	720,189.71	791,989.06	808,633.78	297,560.76	18
							438,739.82	
147,243.70	159,322.13	89,983.83	72,201.37	63,949.93	65,937.80	70,430.92	32,083.28	19
16,116,547.77	19,568,743.80	15,149,489.11	14,905,229.21	14,851,309.45	14,985,411.15	14,662,720.17	16,587,908.61	
4,134,723.26	3,284,120.72	1,811,829.62				*16.00		
		289,975.89	1,936,178.61	1,383,508.05	1,286,256.60	1,206,388.95	61,750.30	
							1,872,359.62	1
1,960,919.15	1,928,749.15	1,775,957.60	883,803.28			*52.00		
			972,856.76	1,739,755.19	771,922.32	714,065.75	71,445.33	2
652,539.62	1,137,044.04	393,826.09				*.58		3
1,151,352.86	1,343,181.06	1,260,030.91	419,391.25			*22.75		4
596,121.50	443,862.25	470,652.73	336,370.53	354,693.33	215,929.36	184,658.51	101,986.34	5
							249,688.13	
396,942.24	427,970.11	445,387.08	319,408.13	359,983.79	265 937.98	266,179.15	136,234.83	6
130,765.80	223,776.25	136,131.16	48,773.37	53,028.11	20,872.51	10,041.07		7
302,891.30	335,222.73	251,227.90	222,039.10	253,967.27	232,612.58	231,683.28	99,572.59	8
							192,761.48	
462,582.81	475,853.94	438,460.42	274,320.68	284,512.19	342,845.96	167,530.12		
						221,755.38	402,919.69	9
151,088.32	260,045.58	221,587.59	154,616.13	170,248.31	173,037.85	156,249.63	67,211.24	10
201,812.10	244,459.57	239,809.53	140,072.81	146,472.30	120,823.15	106,329.31	113,863.98	11
265,596.82	334,893.74	230,695.58	217,002.89	200,123.70	228,208.43	236,873.20	98,841.35	12
							145,527.07	
103,326.64	117,155.16	101,224.62	47,387.45	36,156.39	26,022.42	31,829.72	9,268.89	13
207,472.06	266,966.84	170,258.99	130,404.87	108,956.03	105,478.78	106,556.29	127,568.13	14
388,358.62	428,322.54	290,417.21	247,988.62	290,961.51	315,128.08	351,793.99	367,703.90	15
140,822.93	156,746.96	152,134.92	148,196.90	117,956.97	137,173.63	120,705.51	114,016.62	16
102,431.77	102,271.49	88,777.22	48,689.48	53,409.31	52,222.24	47,532.25	55,444.66	17
145,794.62	144,047.67	118,246.48	77,308.75	63,572.77	73,698.20	72,645.19	68,135.01	18
227,349.84	261,129.49	169,411.21	154,338.61	114,402.95	84,598.05	92,543.42	109,543.90	19
181,125.56	399,308.34	275.045.81	127,285.03	96,728.66	92,272.66	93,017.37	85,027.23	20
987,598.24	1,234,873.51	771,002.52	485,933.54	542,100 26	409,336.17	422,954.63	262,891.14	21
1,701,661.39	2,042,129.63	1,419,363.85	1,171,480.49	860,651.81	753,709.43	631,423.06	298,210.37	
							376,820.72	22

D.—COMPARATIVE TABLE SHOWING THE AGGREGATE RECEIPTS OF

	DISTRICTS.	FISCAL YEAR ENDED JUNE 30—					
		1877.	1878.	1879.	1880.	1881.	1882.
	OHIO—continued.						
7	Seventh (157)						
	Seventh (158)	$78,973.63					
	Seventh (159)	243,816.38	$288,253.45	$296,834.34	$475,976.33	$594,593.31	$700,260.02
8	Eighth (157)						
9	Ninth (5)						
10	Tenth (5)						
	Tenth (160)	1,065,547.84	991,631.47	985,137.32	1,092,852.40	1,089,563.12	1,021,133.71
	Tenth (161)						
11	Eleventh (5)						
	Eleventh (162)	868,720.37	778,436.99	781,031.89	1,425,321.06	1,398,257.92	1,216,251.21
	Eleventh (163)						
12	Twelfth (5)						
13	Thirteenth (5)						
	Thirteenth (164)	35,006.07					
14	Fourteenth (5)						
15	Fifteenth (5)						
	Fifteenth (165)	169,219.71	170,201.23	169,956.83	210,324.75	195,871.89	201,528.11
16	Sixteenth (5)						
17	Seventeenth (5)						
18	Eighteenth (5)						
	Eighteenth (166)	202,865.34					
	Eighteenth (51)	658,688.27	856,168.41	773,824.27	756,807.43	806,538.82	894,059.79
	Eighteenth (167)						
19	Nineteenth (5)						
	Total	15,474,689.79	14,770,506.37	15,894,567.08	18,018,998.99	19,205,835.69	18,359,299.31
	PENNSYLVANIA.						
	First (7)						
	First (169)						
1	First (170)	416,610.80					
	First (171)	1,910,255.38	2,201,333.12	2,262,216.01	2,523,444.87	2,678,845.83	3,011,318.33
	First (172)						
2	Second (174)						
	Second (175)						
3	Third (7)						
4	Fourth (174)						
5	Fifth (5)						
	Fifth (176)	107,336.87					
6	Sixth (5)						
7	Seventh (177)						
8	Eighth (5)						
	Eighth (178)	66,393.11					
	Eighth (171)	353,208.01	422,611.95	447,771.52	553,173.93	622,634.45	689,758.24
9	Ninth (177)						
	Ninth (179)	90,983.93					
	Ninth (171)	617,985.63	803,806.93	870,264.95	1,004,642.47	1,278,820.81	1,450,720.01
	Ninth (173)						
	Ninth (44)						
10	Tenth (5)						
11	Eleventh (50)	19,390.42					
12	Twelfth (5)						
	Twelfth (180)	57,608.21					
	Twelfth (171)	253,832.47	302,767.46	303,693.99	326,321.92	370,256.14	423,128.51
	Twelfth (172)						
13	Thirteenth (5)						
14	Fourteenth (50)	17,337.56					
	Fourteenth (181)	134,995 86	174,891.66	162,113.64	190,145.19	212,589.65	242,351.75
15	Fifteenth (50)	90,807.27					
16	Sixteenth (182)	19,513.01					
	Sixteenth (183)	145,278.68	184,691.01	172,136.87	191,065.09	211,588.05	258,917.37
17	Seventeenth (182)	6,446.78					
18	Eighteenth (50)	9,843.17					
19	Nineteenth (50)	19,217.84					
	Nineteenth (51)	70,508.25	98,450.42	101,391.50	115,337.59	137,259.54	144,726.27
	Nineteenth (184)						
20	Twentieth (50)	15,626.73					
	Twentieth (51)	95,444.06	104,861.81	88,298.56	88,989.28	94,909.77	101,605.53
21	Twenty-first (50)	69,824.71					
22	Twenty-second (5)						
	Twenty-second (185)	263,498.83					
	Twenty-second (171)	852,262.88	1,156,118.13	1,002,727.66	1,184,418.98	1,408,472.82	1,685,425.78
	Twenty-second (173)						

INTERNAL REVENUE IN EACH COLLECTION DISTRICT, ETC.—Continued.

FISCAL YEAR ENDED JUNE 30—							Total.	
1883.	1884.	1885.	1886.	1887.	1888.	1889.		
							$10,696,405.35	
							387,199.45	7
$673,466.44	$24,159.86						3,297,360.13	
							1,230,657.32	8
							7,703,018.99	9
							12,062,126.67	
682,904.73	53,088.15						7,625,459.43	10
	605,660.69	$691,842.78	$595,836.68	$586,278.61	$603,636.47	$609,534.41	3,692,789.64	
							7,504,140.59	
519,923.73	18,228.48						7,492,354.74	11
	1,104,766.75	1,058,436.49	1,165,356.49	1,531,024.04	747,419.50	857,573.36	6,464,576.63	
							6,665,509.34	12
							3,367,274.60	
							112,303.16	13
							1,537,387.19	14
							2,170,807.41	
169,435.60	8,523.01						1,384,010.20	15
							1,554,638.81	16
							3,752,218.39	17
							19,653,832.41	
							641,605.16	
899,510.83	59,357.14						5,701,454.96	18
	728,966.46	793,359.98	764,712.19	823,077.98	892,532.07	872,186.31	4,874,834.99	
							2,546,132.39	19
15,704,047.82	13,520,204.56	12,565,516.62	12,921,349.10	13,898,226.86	12,446,312.98	11,566,727.51	410,588,221.98	
							33,336,366.94	
							6,164,058 40	
							3,288,970.42	1
2,824,875.09	286,591.00						17,098,880.53	
	2,668,583.23	2,886,621.64	2,937,382.02	3,133,111.88	3,044,303.82	3,037,942.52	17,707,895.11	
							21,763,040.15	
							4,270,045 35	2
							10,992,245.63	3
							15,174,310.70	4
							7,195,321.25	
							357,025.00	5
							7,113,434.16	6
							4,174,143.06	7
							5,392,365.29	
							259,174.59	8
675,254.77	62,204.11						3,826,616.98	
							6,072,964.10	
							715,659.00	
1,340,739.84	113,496.27						7,540,478.91	9
	1,138,392.98	1,383,646.26	1,448,629.94	1,688,317.66			5,608,986.84	
					1,794,016.25	1,758,076.29	3,552,092.54	
							4,798,481.39	10
							5,609,490.34	11
							5,280,113.64	
							203,135.28	
417,151.81	88,144.66						2,435,296.96	12
	405,972.16	438,870.96	460,190.00	506,761.24	522,279.15	538,136.53	2,872,210.04	
							1,832,465.92	13
							3,698,304 64	
252,387.47	24,981.01						1,304,456.23	14
							5,436,764.71	15
							2,246,259.62	
248,455.24	26,299.28						1,438,431.59	16
							2,194,831.18	17
							2,138,278.46	18
							3,557,824.94	
123,310.67	7,278 88						798,263.12	19
	132,237.53	129,984.68	141,825.91	154,167.24			561,215.36	
							7,975,172.50	
82,713.35	3,459.78						660,282.14	20
							7,291,268.53	21
							25,438,564.49	
							640,319.55	
1,854,674.01	247,429.54						9,391,529.80	23
	1,681,605.89	1,609,332.26	1,898,175.38	1,800,403.60			6,989,517.13	

D.—Comparative Table showing the Aggregate Receipts of

	DISTRICTS.	FISCAL YEAR ENDED JUNE 30—					
		1863.	1864.	1865.	1866.	1867.	1868.
	PENNSYLVANIA—cont'd.						
	Twenty-third (5)	$258,206.42	$657,304.66	$1,111,052.03	$1,592,697.21	$1,046,306.97	$784,610.38
	Twenty-third (185)						
23	Twenty-third (171)						
	Twenty-third (173)						
	Twenty-third (44)						
24	Twenty-fourth (5)	61,209.21	147,018 83	362,871.63	546,028.21	373,347.61	246,267.55
	Total	5,226,486.25	14,029,728.56	30,289,241.48	30,941,599.32	27,580,633.30	18,269,445.60
	RHODE ISLAND.						
1	First (186)	562,001.20	1,428,619.82	3,118,177.26	4,660,247.06	3,838,601.42	2,203,079.25
	First (187)						
2	Second (186)	264,949.13	556,348.75	1,194,603.62	1,461,091.04	1,211,372.58	649,495.64
	Total	826,950.42	1,984,968.57	4,312,780.88	6,121,938.10	5,049,974.00	2,852,574.89
	SOUTH CAROLINA.						
1	First (188)				91,897.72	518,367.36	619,663.01
2	Second (30)				744,776.33	553,394.59	630,652.79
	Third (188)				149,811.66	745,132.26	1,384,485.08
3	Third (189)						
	Third (190)						
	Total				986,485.71	1,816,894.21	2,634,800.88
	TENNESSEE.						
1	First (64)		555,435.68	996,731.76	2,196,145.30	567,065.15	45,692.45
	Second (64)		47,270.25	608,531.65	1,185,695.26	358,953.86	77,509.86
2	Second (191)						
	Second (192)						
3	Third (50)					5,736.73	72,024.34
4	Fourth (50)					114,580.23	669,538.28
	Fifth (5)					801,512.45	557,185.20
5	Fifth (193)						
	Fifth (194)						
	Fifth (195)						
6	Sixth (5)					186,241.92	363,127.85
7	Seventh (196)					50,052.20	225,960.50
8	Eighth (196)					1,265,317.47	1,705,071.26
	Eighth (197)						
	Total		602,705.93	1,605,263.41	3,381,840.56	3,349,459.51	3,717,010.04
	TEXAS.						
	First (198)				1,348,056.75	1,159,718.43	465,354.29
1	First (199)						
	First (201)						
2	Second (198)				63,066.20	796,000.91	471,583.60
	Third (200)				75,156.66	473,974.14	541,282.17
3	Third (201)						
	Third (202)						
	Fourth (200)				86,119.92	782,170.11	323,803.95
4	Fourth (201)						
	Total				1,573,299.53	3,211,863.59	1,802,023.41
	VERMONT.						
1	First (203)	65,394.89	155,908.01	321,415.60	407,173.17	348,753.35	219,640.85
	Second (203)	82,613.76	187,084.81	329,226.55	492,966.63	364,211.70	216,035.16
2	Second (204)						
	Second (205)						
	Third (203)	54,327.79	120,059.68	246,944.40	302,263.93	253,314.30	186,598.10
3	Third (204)						
	Total	202,336.44	463,052.50	897,586.55	1,202,403.73	966,279.35	622,274.11
	VIRGINIA.						
1	First (206)			18,879.95	501,372.71	48,945.10	33,078.65
	Second (206)				222,951.79	624,458.44	625,768.26
2	Second (207)						
	Second (208)						
	Second (172)						
3	Third (16)	757.68	67,413.69	69,077.52	102,183.26	642,279.76	481,087.30

INTERNAL REVENUE IN EACH COLLECTION DISTRICT, ETC.—Continued.

FISCAL YEAR ENDED JUNE 30—								
1869.	1870.	1871.	1872.	1873.	1874.	1875.	1876.	
$493,187.87	$671,416.96	$552,478.24	$521,720.53	$469,996.94	$499,109.71	$492,543.70	$165,075.60	23
.....	.....	.....	.....	.....	.....	.....	262,934.78	
.....	.....	.....	.....	.....	.....	.....	.....	
.....	.....	.....	.....	.....	.....	.....	.....	
382,934.70	485,156.30	454,688.45	141,523.44	124,828.95	165,876.30	183,569.14	57,498.90	24
15,470,400.02	16,748,704.05	12,535,521.68	9,227,091.25	7,826,275.69	6,373,672.41	6,157,960.04	5,973,481.80	
1,122,782.58	1,147,155.28	598,856.58	580,196.89	287,159.81	68,123.78	*.09	.....	1
.....	.....	.....	.....	.....	154,665.18	231,977.91	222,672.63	
163,612.16	135,221.41	73,636.56	56,729.84	37,392.36	10,375.85	.....	.....	2
1,286,394.74	1,282,376.69	672,493.14	636,926.73	324,552.17	233,164.81	231,978.00	222,672.63	
29,282.80	67,326.77	35,701.47	33,678.25	32,166.76	16,158.90	12,968.25	12,224 10	1
178,914.91	216,052.75	113,905.99	94,991.15	63,487.36	56,464.10	54,424.91	54,732.54	2
145,662.40	128,660.07	109,112.53	70,512.09	71,559.46	35,957.91	54,884.76	37,753.55	3
.....	.....	.....	.....	.....	.....	.....	1,093.72	
.....	.....	.....	.....	.....	.....	.....	.....	
353,860.11	412,039.59	258,719.99	199,181.49	167,213.58	108,580.91	122,277.92	105,803.91	
47,279.80	29,916.86	35,212.22	14,214.30	28,073.27	17,676.16	26,191.72	37,238.31	1
67,198.09	82,996.24	53,819.13	62,856.91	51,937.18	42,263.59	51,507.49	41,670.83	2
.....	.....	.....	.....	.....	.....	.....	.....	
.....	.....	.....	.....	.....	.....	.....	.....	
99,603.82	81,641.57	53,862.84	28,287.92	54,482.65	11,700.05	48,245.83	34,043.13	3
127,412.14	114,533.38	61,193.02	40,547.59	81,708.59	131,566.95	185,915.90	139,126.55	4
403,700.74	556,718.24	331,521.62	322,961.29	259,234.25	296,895.00	410,686.40	125,318.05	5
.....	.....	.....	.....	.....	.....	.....	117,797.52	
.....	.....	.....	.....	.....	.....	.....	.....	
67,480.36	97,175.90	65,387.44	46,903.02	36,835.68	24,931.88	21,882.41	5,215.28	6
72,270.22	74,648.89	58,412.74	77,419.68	28,415.28	63,219.73	51,042.16	15,095.70	7
370,835.95	427,228.49	214,212.64	167,649.49	103,793.86	76,463.82	66,173.37	20,434.42	8
.....	.....	.....	.....	.....	.....	.....	60,753.88	
1,255,781.12	1,470,859.57	874,221.65	766,840.20	644,480.76	664,717.18	861,645.28	596,713.07	
130,235.59	123,452.66	80,907.34	112,959.88	63,972.53	93,808.63	29,933.83	.....	1
.....	.....	.....	.....	.....	.....	97,185.39	112,811.69	
.....	.....	.....	.....	.....	.....	.....	.....	
41,248.67	75,427.30	44,114.96	49,231.89	46,874.63	45,081.98	10,458.60	.....	2
129,028.69	87,850.83	103,065.74	63,169.84	65,481.21	77,919.61	63,494.93	72,963.85	3
.....	.....	.....	.....	.....	.....	.....	.....	
.....	.....	.....	.....	.....	.....	.....	.....	
182,704.92	104,223.54	122,592.38	96,997.59	95,907.40	55,827.91	57,224.54	59,033.20	4
.....	.....	.....	.....	.....	.....	.....	.....	
483,217.87	390,954.33	350,680.42	322,359.20	272,325.77	272,638.13	258,297.29	245,708.74	
97,167.82	116,759.45	114,484.01	54,705.81	19,037.46	5,461.02	*123.90	.....	1
101,016.24	110,326.72	82,758.56	47,589.56	34,410.60	11,696.40	*.42	.....	2
.....	.....	.....	.....	.....	10,662.86	22,024.59	5,943.84	
.....	.....	.....	.....	.....	.....	.....	33,803.40	
120,488.50	125,230.48	82,090.13	56,551.76	22,412.34	13,068.44	*.25	.....	3
.....	.....	.....	.....	.....	15,428.22	36,433.09	7,377.91	
318,672.56	352,316.65	279,332.70	158,847.13	75,860.40	56,316.94	58,582.18	47,125.15	
26,550.56	41,619.88	29,271.00	15,905.22	19,439.26	19,414.91	6,599.36	.....	1
526,962.91	1,123,249.37	787,948.43	1,017,875.41	998,889.96	728,863.60	487,857.73	.....	2
.....	.....	.....	.....	.....	.....	490,132.19	921,713.38	
.....	.....	.....	.....	.....	.....	.....	.....	
1,358,199.59	2,379,180.97	2,452,371.22	2,000,423.93	3,706,225.58	3,035,613.22	3,763,111.17	3,507,609.33	3

D.—COMPARATIVE TABLE SHOWING THE AGGREGATE RECEIPTS OF

	DISTRICTS.	FISCAL YEAR ENDED JUNE 30—					
		1877.	1878.	1879.	1880.	1881.	1882.
	PENNSYLVANIA—cont'd.						
23	Twenty-third (6)						
	Twenty-third (185)	$148,032.30					
	Twenty-third (171)	426,803.63	$467,889.27	$536,167.66	$632,391.33	$653,836.95	$767,154.44
	Twenty-third (173)						
	Twenty-third (44)						
24	Twenty-fourth (5)						
	Total	6,279,046.33	5,917,421.76	5,946,782.36	6,869,930.65	7,669,214.01	8,775,106.23
	RHODE ISLAND.						
1	First (186)						
2	First (187)	233,164.87	246,759.65	230,583.17	210,883.98	209,079.27	229,258.48
	Second (186)						
	Total	233,164.87	246,759.65	230,583.17	210,883.98	209,079.27	229,258.48
	SOUTH CAROLINA.						
1	First (188)						
2	Second (30)	8,819.40					
3	Third (188)						
	Third (189)	7,460.53					
	Third (190)	89,352.63	119,241.69	105,233.91	111,960.78	135,907.16	119,099.79
	Total	105,632.56	119,241.69	105,233.91	111,960.78	135,907.16	119,099.79
	TENNESSEE.						
1	First (64)	11,472.77					
2	Second (64)	12,999.25					
	Second (191)	86,692.89	107,448.97	101,469.88	88,098.71	110,174.68	118,312.99
	Second (192)						
3	Third (50)	11,077.17					
4	Fourth (50)	63,831.78					
5	Fifth (5)						
	Fifth (193)	68,001.73					
	Fifth (194)	540,942.77	627,471.23	702,687.72	805,308.60	922,014.14	777,590.72
	Fifth (195)						
6	Sixth (5)						
7	Seventh (196)						
8	Eighth (196)						
	Eighth (197)	102,163.87	109,564.88	104,766.84	110,328.55	114,574.82	101,824.29
	Total	897,181.78	844,485.08	908,924.44	1,003,735.86	1,146,763.64	997,728.00
	TEXAS.						
1	First (198)						
	First (199)	105,741.55	118,335.32	104,650.46	99,255.52	101,043.60	23,707.81
	First (201)						63,727.15
2	Second (198)						
3	Third (200)	70,560.09	81,412.30	87,441.70	72,722.29	80,784.41	10,361.57
	Third (201)						74,011.11
	Third (202)						
4	Fourth (200)	61,647.46	66,184.52	58,970.16	01,128.74	66,807.60	11,552.43
	Fourth (201)						75,072.86
	Total	237,949.10	265,932.14	251,062.32	233,106.55	248,635.61	258,432.93
	VERMONT.						
1	First (203)						
2	Second (203)						
	Second (204)						
	Second (205)	50,093.11	44,339.49	50,159.59	50,545.74	53,145.83	56,444.58
3	Third (203)						
	Third (204)						
	Total	50,093.11	44,339.49	50,159.59	50,545.74	53,145.83	56,444.58
	VIRGINIA.						
1	First (206)						
2	Second (206)						
	Second (207)	1,104,686.84					
	Second (208)	46,232.63	1,136,621.05	1,157,687.75	866,292.51	943,416.96	1,010,101.01
	Second (172)						
3	Third (16)	3,278,982.96	2,350,996.05	2,144,170.65	2,054,557.71	2,076,473.46	2,144,886.37

INTERNAL REVENUE IN EACH COLLECTION DISTRICT, ETC.—Continued.

FISCAL YEAR ENDED JUNE 30—							Total.	
1883.	1884.	1885.	1886.	1887.	1888.	1889.		
							$9,314,307.31	
							410,067.08	
$834,116.08	$98,893 01						4,467,252.37	23
	953,128.69	$972,753 82	$958,077.31	$837,521.11			3,721,480.93	
					$2,956,760.52	$3,186,641.22	6,143,401.74	
							3,733,719.22	24
8,703,679.23	7,888,700.02	7,371,209.62	7,847,230 56	8,120,282.73	8,317,359.74	8,520,796.56	313,876,751.25	
							19,615,001.11	
395,319.43	130,468.11	127,587.62	132,081.72	226,231.11			2,980,733.13	1
							5,815,428.94	2
395,319.43	130,468.11	127,587.62	132,081.72	226,231.11			28,411,163.18	
							1,469,435.39	1
							2,770,616.82	2
							2,933,531.77	
							8,554.25	3
117,092.80	93,896.95	94,518.23	100,014 30	100,146.85	102,456.19	81,722.51	1,370,643.79	
117,092.80	93,896.95	94,518.23	100,014.30	100,146.85	102,456.19	81,722.51	8,552,782.02	
							4,608,945.75	1
							2,751,209.09	
119,241.32	12,063.63						743,503.07	2
	98,711.42	98,270.73	107,827.85	111,973.12	121,682.51	139,979.81	678,444.94	
							501,606.05	3
							1,735,974.41	4
							4,065,733.24	
							185,799.25	5
979,279 85	93,263.52						5,448,558.55	
	1,042,312.42	958,918.70	917,085.27	900,542.93	887,607.83	926,355.96	5,632,823.11	
							915,181.74	6
							716,537.40	7
							4,417,180.77	
75,369.12	3,624.97						782,970.72	8
1,173,890.29	1,249,975.96	1,057,189.43	1,024,912.62	1,012,516.05	1,009,290.34	1,066,335.77	33,184,468.09	
							3,608,399.93	
							762,731.34	1
77,010.90	72,654.53	38,898.41	37,817.13	36,938.64			327,046.76	
							1,643,988.14	2
							2,156,670.03	
79,510.74	65,412.54	74,778.88	84,739.41	93,785.75			472,238.43	3
					128,920.16	143,424.09	272,344.25	
							2,293,886.37	
107,128.97	72,081.95	68,152.32	74,294.05	78,619.53	83,007.21	84,693.43	643,050.32	4
263,650.61	210,149.02	181,829.61	196,850.59	209,343.92	211,927.37	228,117.52	12,180,355.57	
							1,926,025.34	1
							2,079,937.11	
							38,631.29	2
46,062.27	30,904.88	29,889.83	32,503.17	30,119.75			508,011.64	
							1,583,350.10	
							59,239.15	3
46,062.27	30,904.88	29,889.83	32,503.17	30,119.75			6,195,194.63	
							761,076.80	1
							7,144,825.90	
							2,516,532.41	
768,141.62	40,134.98						5,968,628.54	2
	1,497,936.14	1,518,873.88	1,550,210.50	1,576,265.80	1,846,379.25	1,837,636.25	9,826,801.82	
1,699,837.83	139,641.48						39,452,080.75	3

D.—Comparative Table showing the Aggregate Receipts of

	DISTRICTS.	FISCAL YEAR ENDED JUNE 30—					
		1863.	1864.	1865.	1866.	1867.	1868.
	VIRGINIA—continued.						
4	Fourth (209)		$70,100.03	$136,315.92	$348,939.74	$116,126.26	$112,734.24
	Fourth (210)						
	Fourth (173)						
5	Fifth (209)					175,090.80	192,109.99
	Fifth (211)						
	Fifth (212)						
6	Sixth (50)					157,636.44	152,599.39
	Sixth (213)						
	Sixth (173)						
	Sixth (214)						
7	Seventh (50)					120,010.48	150,445.28
8	Eighth (29)					82,174.74	35,436.29
	Total	$757.68	137,513.72	221,273.39	1,175,447.50	1,966,722.02	1,783,319.60
	WEST VIRGINIA.						
1	First (50)	90,358.47	225,685.86	499,870.94	718,492.82	719,765.02	643,219.61
	First (215)						
	First (216)						
2	Second (39)		126,271.10	135,887.60	88,201.67	83,888.78	78,077.44
3	Third (50)				213,870.60	140,870.61	70,862.63
	Total	90,358.47	351,956.96	635,758.54	1,020,565.09	944,524.41	792,159.68
	WISCONSIN.						
1	First (35)	218,645.23	640,642.76	1,114,790.80	1,720,513.87	1,617,207.43	972,452.80
	First (217)						
2	Second (218)	62,984.55	119,868.51	286,062.22	360,633.95	288,495.57	238,564.71
	Second (219)						
	Second (220)						
3	Third (218)	29,049.14	45,948.32	121,241.90	148,783.09	116,607.10	126,247.93
	Third (221)						
4	Fourth (222)	50,519.31	72,116.35	151,719.36	209,592.10	204,098.62	152,564.50
5	Fifth (222)	48,049.65	73,760.12	157,419.66	202,712.69	145,119.20	205,974.00
6	Sixth (35)	59.00	80,174.74	14,520.73	99,529.61	141,437.49	115,610.87
	Total	409,306.88	1,032,510.80	1,845,754.67	2,741,765.31	2,513,025.41	1,811,414.87

INTERNAL REVENUE IN EACH COLLECTION DISTRICT, ETC.—Continued.

FISCAL YEAR ENDED JUNE 30—								
1869.	1870.	1871.	1872.	1873.	1874.	1875.	1876.	
$125,608.45	$90,395.10	$78,194.56	$35,165.05	$63,204.09	$69,910.57	$30,843.20	.....	
.....	.....	.....	.....	.....	.....	148,335.86	$1,170,727.80	4
359,885.21	1,483,158.11	1,626,511.35	1,600,407.77	2,246,279.28	2,194,241.68	2,212,926.10	.....	
.....	.....	.....	.....	.....	.....	233,014.91	1,491,946.03	5
148,461.65	187,616.28	188,376.36	147,271.66	177,117.49	159,029.49	175,295.03	146,376.66	
.....	.....	.....	.....	.....	.....	.....	.....	
.....	.....	.....	.....	.....	.....	.....	.....	6
188,345.01	199,224.33	110,573.17	95,409.63	89,924.02	66,333.67	64,452.84	52,908.37	
15,133.07	41,907.35	40,020.60	26,569.26	42,719.61	35,257.82	48,352.81	23,112.51	7
2,744,144.45	5,496,351.39	5,310,272.69	4,039,027.93	7,343,799.29	6,308,664.96	7,660,921.20	7,314,393.64	8
355,202.16	388,201.17	326,086.94	345,049.65	294,343.01	270,103.40	256,382.22	239,603.57	
.....	.....	.....	.....	.....	.....	.....	.....	1
157,635.16	325,809.90	262,740.06	97,581.95	127,321.51	226,742.30	228,433.98	176,920.77	
50,206.10	42,955.99	38,493.94	22,973.74	27,997.07	19,273.06	24,052.00	14,354.76	2
563,043.42	756,967.15	627,320.94	465,605.34	449,661.59	516,118.76	508,868.20	430,978.10	3
1,356,909.23	1,796,214.81	1,458,133.68	1,601,413.76	1,476,800.80	1,927,241.09	2,306,038.00	2,859,406.01	
.....	.....	.....	.....	.....	.....	.....	.....	
184,032.70	165,509.62	131,723.38	.....	.....	.....	*36.31	.....	
.....	.....	.....	171,866.01	165,515.94	167,721.72	152,057.20	155,278.72	1
.....	.....	.....	.....	.....	.....	.....	.....	
82,508.61	81,184.38	63,954.31	.....	.....	.....	.....	.....	
.....	.....	.....	85,778.34	164,673.18	189,965.03	180,973.52	202,782.78	2
123,384.86	121,729.71	94,422.96	40,503.69	.....	.....	*65.85	.....	
108,873.19	109,048.23	104,061.66	38,978.76	.....	.....	*13.23	.....	3
103,332.00	89,328.28	130,407.88	61,685.99	74,830.99	84,636.16	82,802.64	91,302.80	4
1,959,040.65	2,363,015.03	1,977,703.87	2,000,226.55	1,881,820.91	2,369,564.00	2,722,076.75	3,308,770.31	5
								6

D.—COMPARATIVE TABLE SHOWING THE AGGREGATE RECEIPTS OF

	DISTRICTS.	FISCAL YEAR ENDED JUNE 30—					
		1877.	1878.	1879.	1880.	1881.	1882.
	VIRGINIA—continued.						
4	Fourth (209)						
	Fourth (210)	$1,313,799.65	$1,235,457.49	$1,378,594 91	$1,002,952.34	$1,052,260.58	$1,096,673.36
	Fourth (173)						
5	Fifth (209)						
	Fifth (211)	939,454.59					
	Fifth (212)	998,814.22	1,563,350.83	1,566,900.17	1,602,624.13	1,763,176.49	1,740,374.41
6	Sixth (50)	38,159.64					
	Sixth (213)	155,462.37	215,804.87	201,193.40	254,982.89	226,778.26	234,273.12
	Sixth (173)						
	Sixth (214)						
7	Seventh (50)	11,677.92					
8	Eighth (29)	14,949.94					
	Total	7,932,220.78	6,501,730.29	6,448,546.88	5,781,409.58	6,063,105.75	6,226,308.30
	WEST VIRGINIA.						
1	First (50)	56,427.59					
	First (215)	224,691.39	286,622.62	276,753.41	308,824.72	340,793.62	366,323.15
	First (216)						
2	Second (39)	174,497:89	89,848.95	46,222.44	61,847.43	111,802 71	135,953.41
3	Third (50)	5,413.72					
	Total	461,030.59	326,471.57	322,975.85	370,672.15	452,596.33	502,276.56
	WISCONSIN.						
1	First (35)	2,459,820.30	2,003,337.24	2,200,128.58	2,214,102.88	2,373,603.87	2,560,688.30
	First (217)						
2	Second (218)						
	Second (219)	138,837.37	142,657.44	145,468.47	155,505.99	169,982.52	198,570.39
	Second (220)						
3	Third (218)						
	Third (221)	179,816.19	192,700.30	192,022.73	212,824.49	229,859.40	258,903.53
4	Fourth (222)						
5	Fifth (222)						
6	Sixth (35)	88,965.83	92,606.25	80,982.42	116,083.43	136,559.22	174,953.00
	Total	2,867,439.69	2,431,301.23	2,627,602.20	2,698,516.79	2,910,095.01	3,193,115.22

INTERNAL REVENUE IN EACH COLLECTION DISTRICT, ETC.—Continued.

FISCAL YEAR ENDED JUNE 30—							Total.	
1883.	1884.	1885.	1886.	1887.	1888.	1889.		
							$1,277,537.21	
$1,109,739.37	$97,392.94						9,606,933.86	4
	632,703.09	$730,134.04	$657,490.26	$619,758.67			2,640,086.06	
							12,040,668.29	
							2,664,415.53	5
1,207,237.79	98,634.34						10,631,112.38	
							1,672,940.09	
203,239.74	21,686.43						1,542,921.08	
	704,596.70	804,131.80	775,026.94	727,370.17			3,011,125.61	6
					$1,406,780.47	$1,405,990.23	2,872,776.70	
							1,140,304.72	7
							411,640.00	8
5,078,196.35	3,232,726.10	3,052,639.72	2,982,727.70	2,923,394.64	3,253,165.72	3,303,626.48	115,191,407.75	
							5,428,882.43	
335,407.57	20,945.74						2,160,362.22	1
	525,623.56	543,188.59	486,062.88	538,266.42	565,278.66	781,663.47	3,439,483.58	
211,075.92	14,358.98						2,911,129.04	2
							671,324.22	3
546,483.49	560,328.28	543,188.59	486,062.88	538,266.42	565,278.66	781,663.47	14,611,181.49	
2,535,264.81	2,400,035.32	2,465,958.58	2,508,601.80	2,536,600.62			47,319,642.57	
					2,617,480.40	2,605,306.41	5,312,780.87	1
							1,837,911.58	
193,820.09	155,457.97	151,412.77	156,740.69	166,500.81			2,587,460.10	2
					367,965.63	401,195.51	769,161.14	
							815,584.78	
278,364.03	251,749.72	241,745.40	247,272.61	269,695.18			3,379,126.43	3
							1,220,717.31	4
							1,194,010.45	5
190,050.19	186,512.61	173,901.03	182,695.53	207,107.40			2,809,166.09	6
3,197,499.12	2,993,755.62	3,033,017.78	3,095,316.63	3,179,964.01	2,985,446.09	3,096,495.92	67,245,561.32	

D.—COMPARATIVE TABLE SHOWING THE AGGREGATE RECEIPTS

	STATES AND TERRITORIES.	FISCAL YEAR ENDED JUNE 30—		
		1863.	1864.	1865.
1	Alabama			
2	Arizona (4)			
3	Arkansas			
4	California (14)	$631, 831. 83	$1, 676, 388. 37	$3, 944, 052. 48
	California (15)			
5	Colorado (16)	21, 078. 85	41, 160. 28	132, 392. 50
	Colorado (17)			
6	Connecticut (35)	1, 552, 614. 85	3, 272, 515. 95	6, 576, 064. 21
	Connecticut (23)			
7	Dakota (24)			
8	Delaware (25)	167, 467. 52	391, 024. 61	819, 902. 34
	Delaware (26)			
	Delaware (27)			
9	District of Columbia (28)	45, 349. 77	365, 983. 74	748, 631. 94
10	Florida			
11	Georgia			
12	Idaho (24)			
13	Illinois	2, 012, 592. 46	9, 837, 970. 87	9, 523, 721. 58
14	Indiana	924, 904. 21	3, 398, 219. 97	4, 821, 243. 48
15	Iowa	285, 962. 71	632, 336. 74	1, 746, 758. 25
16	Kansas (a)	38, 906. 46	65, 440. 05	215, 318. 60
17	Kentucky	1, 382, 771. 89	3, 946, 092. 99	4, 857, 133. 94
18	Louisiana (35)	154, 341. 17	2, 274, 542. 70	1, 714, 502. 46
	Louisiana (75)			
19	Maine (35)	514, 036. 38	1, 294, 093. 97	2, 618, 823. 23
20	Maryland (35)	961, 406. 38	3, 010, 822. 93	5, 422, 763. 93
	Maryland (84)			
21	Massachusetts	4, 830, 500. 86	12, 173, 222. 22	25, 250, 362. 90
22	Michigan	344, 418. 97	1, 201, 086. 71	2, 602, 437. 79
23	Minnesota	59, 561. 27	87, 700. 52	256, 724. 78
24	Mississippi (35)			
25	Missouri	1, 184, 325. 90	3, 307, 450. 57	5, 480, 303. 60
26	Montana (24)			36, 022. 93
	Montana (104)			
	Montana (105)			
27	Nebraska (24)	12, 338. 45	26, 795. 91	57, 418. 74
	Nebraska (106)			
28	Nevada (107)	22, 904. 60	79, 784. 33	288, 042. 19
	Nevada (108)			
29	New Hampshire (35)	483, 692. 09	1, 074, 267. 28	2, 544, 781. 72
	New Hampshire (111)			
30	New Jersey	1, 227, 444. 10	3, 116, 358. 16	7, 589, 310. 32
31	New Mexico (4)	9, 318. 00	10, 941. 09	49, 042. 98
	New Mexico (116)			
32	New York	9, 241, 038. 60	27, 215, 720, 62	53, 708, 375. 16
33	North Carolina			
34	Ohio	3, 217, 480. 72	12, 224, 459. 73	16, 022, 924. 78
35	Oregon (b) (15)	61, 304. 39	104, 027. 80	159, 209. 18
	Oregon (168)			
36	Pennsylvania	5, 226, 486. 25	14, 029, 528. 56	30, 289, 241. 48
37	Rhode Island (35)	826, 950. 42	1, 984, 968. 57	4, 312, 780. 88
38	South Carolina			
39	Tennessee		602, 705. 93	1, 605, 263. 41
40	Texas			
41	Utah (24)	6, 140. 96	13, 748. 14	41, 728. 03
42	Vermont (35)	202, 336. 44	463, 052. 50	897, 586. 55
43	Virginia	757. 68	137, 513. 72	221, 273. 39
44	Washington (45)	8, 263. 40	22, 394. 92	76, 740. 63
45	West Virginia	90, 358. 47	351, 956. 96	635, 758. 54
46	Wisconsin	409, 306. 88	1, 032, 510. 80	1, 845, 754. 07
47	Wyoming (16)			
	Total by States and Territories	36, 158, 792. 93	109, 526, 788. 21	197, 112, 393. 08
1	Adhesive stamps	4, 140, 175. 20	5, 894, 945. 14	11, 162, 392. 14
2	Salaries	696, 181. 71	1, 705, 124. 63	2, 826, 333. 37
3	Passports through Department of State	8, 043. 00	10, 515. 00	25, 675. 29
4	Fines, penalties, etc., reported by United States officers other than collectors of internal revenue		8, 375. 54	2, 735. 29
5	Collections on articles produce in the late insurrectionary districts, made by special Treasury agents			
6	Collections made by contract under act of May 8, 1872, and covered into the Treasury			
	Aggregate receipts, including commissions allowed on sales of adhesive stamps	41, 003, 192. 93	117, 145, 748. 52	211, 129, 529. 17
	Aggregate receipts, exclusive of commissions allowed on sales of adhesive stamps	41, 003, 192. 93	116, 965, 578. 26	210, 855, 864. 53

OF INTERNAL REVENUE BY STATES AND TERRITORIES.

FISCAL YEAR ENDED JUNE 30—						
1866.	1867.	1868.	1869.	1870.	1871.	
$4, 132, 311. 05	$4, 119, 130. 23	$4, 279, 605. 81	$472, 316. 25	$595, 700. 17	$363, 758. 37	1
	2, 605. 23	13, 900. 75	11, 315. 21	15, 615. 43	16, 889. 07	2
256, 147. 11	1, 752, 157. 18	844, 389. 99	144, 985. 07	369, 284. 10	130, 524. 47	3
4, 928, 898. 53	6, 757, 131. 69	6, 552, 526. 45	4, 529, 547. 44	4, 602, 439. 31	3, 606, 921. 58	4
150, 614. 13	151, 686. 51	119, 219. 96	60, 999. 26	73, 910. 34	69, 993. 65	5
9, 636, 687. 90	7, 582, 970. 57	4, 400, 398. 37	2, 840, 505. 95	2, 564, 477. 14	1, 426, 870. 91	6
	1, 900. 02	10, 210. 05	10, 900. 14	8, 715. 61	7, 130. 43	7
1, 013, 723. 31	785, 967. 28	588, 254. 00	425, 106. 47	451, 985. 70	444, 018. 11	8
766, 825. 55	704, 202. 28	485, 365. 87	446, 045. 18	514, 482. 20	267, 809. 27	9
98, 215. 22	537, 988. 56	402, 745. 57	71, 699. 13	100, 318. 42	121, 030. 56	10
4, 308, 577. 00	4, 487, 440. 90	6, 146, 964. 69	1, 010, 281. 57	1, 144, 241. 38	736, 944. 02	11
79, 518. 84	81, 236. 90	95, 413. 89	78, 105. 69	65, 424. 05	53, 010. 97	12
15, 397, 463. 81	12, 112, 985. 84	7, 564, 886. 51	13, 063, 256. 87	18, 364, 366. 66	15, 119, 609. 02	13
5, 417, 336. 50	4, 122, 863. 08	2, 342, 327. 38	3, 869, 757. 30	5, 045, 023. 82	4, 798, 468. 90	14
2, 715, 380. 51	2, 074, 052. 35	1, 182, 230. 22	1, 558, 264. 95	1, 377, 981. 34	1, 081, 841. 24	15
359, 363. 52	367, 543. 10	253, 038. 05	244, 763. 19	343, 231. 15	236, 766. 04	16
5, 922, 122. 48	5, 415, 134. 02	4, 139, 414. 09	7, 547, 269. 73	9, 887, 623. 73	6, 514, 140. 54	17
6, 197, 813. 37	6, 226, 787. 86	3, 826, 415. 67	1, 902, 115. 88	2, 981, 524. 02	1, 912, 755. 25	18
2, 822, 862. 70	2, 326, 380. 00	1, 594, 080. 34	669, 906. 40	807, 224. 36	412, 096. 48	19
7, 758, 072. 17	6, 162, 177. 85	4, 281, 053. 25	4, 547, 592. 76	5, 438, 472. 91	3, 703, 854. 80	20
34, 989, 208. 33	28, 088, 077. 60	17, 751, 222. 67	9, 272, 435. 41	10, 684, 090. 19	6, 801, 074. 68	21
3, 480, 831. 94	3, 112, 070. 47	2, 757, 816. 33	2, 642, 514. 12	2, 918, 987. 30	2, 639, 670. 28	22
381, 911. 07	452, 104. 42	368, 390. 72	363, 337. 80	467, 879. 15	252, 582. 98	23
781, 201. 03	4, 583, 182. 77	3, 751, 872. 48	194, 129. 47	284, 792. 49	238, 257. 43	24
7, 489, 908. 23	6, 494, 095. 53	4, 913, 361. 02	5, 295, 804. 53	6, 004, 278. 11	5, 095, 075. 89	25
113, 280. 00	77, 431. 14	108, 284. 36	64, 836. 33	103, 555. 55	82, 104. 98	26
100, 874. 78	107, 975. 34	127, 735. 11	161, 388. 48	308, 501. 51	224, 368. 92	27
283, 407. 96	200, 174. 24	308, 970. 17	229, 577. 13	188, 027. 45	103, 634. 03	28
3, 480, 348. 74	2, 882, 147. 20	1, 941, 493. 45	651, 348. 02	632, 407. 38	396, 926. 97	29
10, 191, 966. 82	7, 890, 262. 61	5, 695, 200. 22	3, 792, 361. 61	4, 075, 359. 85	2, 458, 600. 26	30
71, 358. 16	64, 365. 39	57, 435. 04	43, 615. 43	46, 927. 22	34, 811. 08	31
71, 922, 529. 11	58, 825, 159. 06	39, 395, 787. 64	35, 716, 423. 18	36, 361, 550. 38	28, 870, 402. 06	32
414, 407. 05	1, 648, 752 35	1, 977, 285. 65	750, 535. 98	1, 398, 719. 95	1, 362, 268. 19	33
25, 732, 509. 59	19, 902, 527. 66	12, 224, 617. 55	16, 116, 547. 77	19, 568, 743. 80	15, 149, 489. 11	34
279, 444. 77	351, 450. 16	350, 327. 83	171, 898. 09	329, 212. 01	156, 547. 64	35
39, 941, 599. 32	27, 580, 633. 30	18, 269, 445. 60	15, 470, 400. 02	16, 748, 704. 05	12, 535, 521. 68	36
6, 121, 938. 10	5, 049, 974. 00	2, 852, 574. 89	1, 286, 394. 74	1, 282, 376. 69	672, 493. 14	37
986, 485. 71	1, 816, 894. 21	2, 634, 800. 88	353, 860. 11	412, 039. 59	258, 719. 99	38
3, 381, 840. 56	3, 349, 459. 51	3, 717, 010. 04	1, 255, 781. 12	1, 470, 859. 57	874, 221. 65	39
1, 573, 299. 53	3, 211, 863. 59	1, 802, 023. 41	483, 217. 87	390, 954. 33	350, 680. 42	40
62, 008. 22	64, 296. 34	48, 985. 36	67, 971. 40	46, 296. 41	39, 995. 71	41
1, 202, 403. 73	986, 279. 35	622, 274. 11	318, 672. 56	352, 316. 65	279, 332. 70	42
1, 175, 447. 50	1, 966, 722. 02	1, 783, 319. 60	2, 744, 144. 45	5, 496, 351. 39	5, 319, 272. 69	43
48, 030. 85	78, 911. 80	70, 101. 27	49, 367. 43	83, 272. 63	36, 753. 01	44
1, 020, 565. 09	944, 524. 41	792, 159. 68	563, 042. 42	756, 967. 15	627, 320. 94	45
2, 741, 765. 31	2, 513, 025. 41	1, 811, 414. 87	1, 959, 040. 65	2, 363, 015. 03	1, 977, 703. 87	46
			5, 106. 50	25, 879. 82	10, 845. 25	47
289, 931, 115. 20	248, 124, 761. 33	175, 257, 250. 86	143, 027, 988. 76	167, 560, 107. 49	127, 873. 109. 23	
15, 044, 373. 18	16, 094, 718. 00	14, 852, 252. 02	16, 420, 710. 01	16, 544, 043. 06	15, 342, 739. 46	1
3, 717, 394. 69	1, 029, 991. 98	1, 043, 561. 40	561, 962. 52	1, 109, 526. 42	787, 262. 55	2
29, 759. 00	27, 101. 00	27, 500. 00	28, 683. 00	22, 191. 00	8, 065. 00	3
210, 234. 38	579, 640. 19					4
1, 974, 107. 72	64, 262. 15					5
						6
310, 906, 984. 17	265, 920, 474. 65	191, 180, 564. 28	160, 039, 344. 29	185, 235, 867. 97	144, 011, 176. 24	
310, 120, 448. 13	265, 064, 938. 43	190, 374, 925. 59	159, 124, 126. 86	184, 302, 828. 34	143, 198, 322. 10	

D.—COMPARATIVE TABLE SHOWING THE AGGREGATE RECEIPTS

	STATES AND TERRITORIES.	FISCAL YEAR ENDED JUNE 30—		
		1872.	1873.	1874.
1	Alabama	$238,160.14	$152,493.35	$135,792.61
2	Arizona (4)	15,578.56	13,562.73	10,042.69
3	Arkansas	94,301.22	88,861.02	68,876.94
4	California (14)	3,053,517.39	2,867,911.07	2,481,841.50
	California (15)			
5	Colorado (16)	63,272.34	75,749.64	64,855.38
	Colorado (17)			
6	Connecticut (35)	1,204,614.64	873,984.99	580,379.11
	Connecticut (23)			
7	Dakota (24)	5,985.81	7,597.36	11,944.28
	Delaware (25)	400,101.26	429,392.84	357,653.83
8	Delaware (26)			
	Delaware (27)			
9	District of Columbia (28)	216,999.56	133,424.58	115,573.57
10	Florida	99,455.64	158,142.21	133,675.34
11	Georgia	583,160.18	477,959.90	384,622.55
12	Idaho (24)	23,974.31	19,275.80	18,832.25
13	Illinois	15,799,667.30	16,493,169.34	15,419,720.89
14	Indiana	5,441,892.72	5,678,052.51	4,823,495.59
15	Iowa	1,067,790.62	1,012,997.29	933,261.16
16	Kansas (a)	161,371.91	161,469.76	149,757.65
17	Kentucky	5,847,468.44	5,456,628.47	6,950,279.42
18	Louisiana (35)	1,627,782.26	1,339,607.30	982,464.68
	Louisiana (75)			
19	Maine (35)	302,123.05	214,096.26	128,089.45
20	Maryland (35)	3,791,269.61	2,653,801.83	2,351,107.33
	Maryland (84)			
21	Massachusetts	6,329,060.67	3,701,004.95	2,792,302.71
22	Michigan	2,399,972.35	2,205,720.72	1,788,080.12
23	Minnesota	248,979.43	231,404.94	227,355.55
24	Mississippi (35)	133,875.44	128,079.31	107,619.11
25	Missouri	4,618,218.51	4,259,320.15	4,325,486.05
	Montana (24)	28,955.04	24,018.11	29,027.76
26	Montana (104)			
	Montana (105)			
27	Nebraska (24)	195,698.91	242,962.38	276,386.52
	Nebraska (106)			
28	Nevada (107)	77,359.23	72,305.32	52,549.45
	Nevada (108)			
29	New Hampshire (35)	304,235.96	325,455.36	248,679.19
	New Hampshire (111)			
30	New Jersey	2,491,433.81	2,567,442.37	1,725,026.73
31	New Mexico (4)	23,755.88	23,237.51	18,417.78
	New Mexico (116)			
32	New York	23,483,729.18	19,219,504.52	15,182,362.62
33	North Carolina	1,108,524.79	1,408,321.72	1,485,731.24
34	Ohio	14,905,229.21	14,851,309.45	14,985,411.15
35	Oregon (b) (45)	125,541.86	73,544.48	46,773.16
	Oregon (168)			
36	Pennsylvania	9,227,091.25	7,826,275.69	6,373,672.41
37	Rhode Island (35)	636,926.73	324,552.17	233,164.81
38	South Carolina	199,181.49	167,213.58	108,580.91
39	Tennessee	766,840.20	644,480.76	664,717.18
40	Texas	322,359.20	272,325.77	272,638.13
41	Utah (24)	39,480.84	40,786.23	41,684.39
42	Vermont (35)	158,847.13	75,860.40	50,316.94
43	Virginia	4,939,027.93	7,343,799.29	6,308,664.96
44	Washington (45)	23,890.32	15,698.64	17,999.02
45	West Virginia	465,605.34	449,061.59	516,118.76
46	Wisconsin	2,000,226.55	1,881,820.91	2,369,564.60
47	Wyoming (16)	6,727.27	10,652.94	11,233.38
	Total by States and Territories	115,299,061.48	106,255,537.51	96,368,430.25
1	Adhesive stamps	16,177,320.60	7,702,376.85	6,136,844.64
2	Salaries	294,564.65	117,541.72	139,472.09
3	Passports through Department of State			
4	Fines, penalties, etc., reported by United States officers other than collectors of internal revenue			
5	Collections on articles produced in the late insurrectionary districts, made by special Treasury agents			
6	Collections made by contract under act of May 8, 1872, and covered into the Treasury			
	Aggregate receipts, including commissions allowed on sales of adhesive stamps	131,770,946.73	114,075,456.08	102,644,746.98
	Aggregate receipts, exclusive of commissions allowed on sales of adhesive stamps	130,890,096.90	113,504,012.80	102,191,018.98

OF INTERNAL REVENUE BY STATES AND TERRITORIES—Continued.

FISCAL YEAR ENDED JUNE 30—						
1875.	1876.	1877.	1878.	1879.	1880.	
$115,689.37	$109,340.97	$108,010.00	$137,969.57	$122,234.38	$135,890.38	1
10,263.06	11,976.35	15,520.47	20,371.01	24,470.87	26,984.10	2
75,377.44	68,201.08	85,850.09	115,735.77	115,210.57	126,089.12	3
2,088,033.26	3,095,039.90	2,749,593.74	2,146,789.46	2,217,498.69	2,783,031.64	4
70,581.82	72,668.57	75,774.58	63,507.90	114,936.39	108,259.54	5
627,717.96	658,114.51	661,420.26	560,335.59	523,258.67	461,180.13	6
10,010.18	12,156.36	22,395.70	29,954.20	33,692.79	41,653.29	7
360,331.03	417,592.83	98,582.04				
		349,888.44				8
		21,704.83	480,937.00	378,684.39	304,398.21	
112,226.09	114,599.26	26,017.94				9
184,777.59	174,257.70	165,890.81	183,823.38	200,424.73	204,599.53	10
388,226.84	362,726.44	278,879.30	333,519.90	322,770.60	322,074.18	11
19,136.00	16,993.82	16,561.60	19,777.61	21,883.88	22,665.54	12
17,634,626.71	23,730,694.18	21,870,203.14	19,668,791.32	19,470,641.75	23,035,614.49	13
4,653,789.05	5,579,126.27	6,037,220.27	5,710,837.56	5,851,103.83	6,213,636.49	14
1,040,217.69	1,212,617.93	810,399.78	938,851.13	839,445.39	854,859.78	15
133,685.86	150,604.43	139,763.33	153,357.50	176,935.57	252,734.01	16
9,025,587.88	7,705,592.75	9,534,424.95	6,880,614.15	7,672,945.94	8,885,544.90	17
606,264.38	529,787.68	626,440.25	850,641.46	588,595.99	712,049.65	18
107,473.15	90,655.97	79,620.89	70,695.78	75,531.22	76,767.87	19
2,760,736.57	2,577,579.12	2,705,246.10	2,320,795.24	2,266,672.15	2,393,957.01	20
2,708,014.29	2,752,215.87	2,668,726.56	2,424,363.77	2,435,068.60	2,635,053.10	21
1,031,284.80	2,066,163.80	1,821,882.00	1,602,803.34	1,654,043.34	1,611,757.99	22
228,362.45	248,776.18	239,461.70	275,002.75	305,708.76	364,689.64	23
96,967.92	85,165.44	78,063.30	86,824.03	87,271.68	91,238.70	24
4,594,875.31	2,981,941.51	4,450,067.73	5,071,233.42	5,026,806.48	5,449,654.08	25
23,666.10	20,082.80	20,729.58	27,103.88	30,084.53	33,714.17	
						26
292,472.30	502,395.59	602,743.30	699,821.37	870,309.81	912,784.86	27
58,803.30	67,923.13	58,312.43	59,017.46	61,263.06	60,455.19	28
299,389.55	260,261.28	234,998.99	228,188.11	222,898.88	278,139.08	29
2,363,469.41	3,779,949.88	4,987,960.90	5,095,325.19	4,670,215.14	4,207,807.81	30
22,066.10	22,161.60	17,710.76	19,325.36	18,898.42	31,850.93	31
15,238,881.81	14,616,723.99	14,452,178.57	14,951,510.56	15,445,801.99	16,249,877.34	32
1,630,423.58	1,671,138.20	1,775,847.99	1,818,459.92	2,413,368.77	2,354,006.71	33
14,662,720.17	16,587,008.61	15,474,689.79	14,770,506.37	15,891,567.08	18,018,998.99	34
47,939.64	49,572.62	53,100.28	60,682.89	68,471.12	76,981.70	35
6,157,960.04	5,973,431.80	6,279,046.33	5,917,421.76	5,946,782.36	6,869,930.65	36
231,978.00	222,672.63	233,164.87	246,759.65	230,583.17	210,883.98	37
122,277.92	105,803.91	105,632.50	119,241.69	105,233.91	111,960.78	38
861,645.28	596,713.67	897,181.73	844,485.08	908,924.44	1,003,735.86	39
258,297.29	245,708.74	237,949.10	265,932.14	251,062.32	233,106.55	40
31,890.68	33,331.86	28,438.13	43,936.23	47,413.02	74,352.48	41
58,582.18	47,125.15	50,093.11	44,339.49	50,159.59	50,545.74	42
7,660,921.20	7,314,393.64	7,932,220.78	6,501,730.29	6,448,546.88	5,781,409.58	43
21,146.60	20,411.13	21,373.46	23,011.00	30,277.11	27,018.34	44
508,868.20	430,978.10	461,030.59	326,471.57	322,975.85	370,672.15	45
2,722,076.75	3,308,770.31	2,867,439.69	2,431,301.23	2,627,602.20	2,698,516.79	46
11,942.11	15,063.37	15,204.45	15,207.28	14,197.44	15,947.95	47
103,771,664.60	110,718,011.03	112,544,657.31	104,717,320.36	107,212,082.81	116,848,219.80	
6,557,229.65	6,518,487.51	6,450,429.15	6,380,405.13	6,706,384.06	7,668,394.22	1
232.64	588.27	97.79				2
						3
						4
						5
216,027.34						6
110,545,154.23	117,237,086.81	118,995,184.25	111,097,725.49	113,918,466.87	124,516,614.02	
110,071,515.00	116,768,096.22	118,549,230.25	110,654,163.37	113,449,621.38	123,981,916.10	

D.—COMPARATIVE TABLE SHOWING THE AGGREGATE RECEIPTS

	STATES AND TERRITORIES.	FISCAL YEAR ENDED JUNE 30—		
		1881.	1882.	1883.
1	Alabama	$130,651.39	$140,532.92	$108,673.85
2	Arizona (4)	38,008.21	45,464.31	40,007.72
3	Arkansas	132,086.94	109,039.36	97,715.53
4	California (14)	3,613,390.86	4,127,177.51	4,002,373.14
	California (15)			
5	Colorado (16)	215,051.06	247,264.09	216,100.47
	Colorado (17)			
6	Connecticut (35)	579,690.02	565,801.28	506,990.84
	Connecticut (23)			
7	Dakota (24)	48,603.66	67,436.83	66,874.58
	Delaware (25)			
8	Delaware (26)			
	Delaware (27)	311,066.76	350,906.37	293,636.48
9	District of Columbia (28)			
10	Florida	254,889.51	280,227.32	243,545.33
11	Georgia	364,133.48	359,360.88	395,661.03
12	Idaho (24)	25,800.17	31,908.27	35,079.88
13	Illinois	25,784,081.51	28,252,417.37	25,977,525.39
14	Indiana	7,281,253.48	6,485,356.94	5,592,719.85
15	Iowa	923,776.98	1,843,904.74	4,062,720.07
16	Kansas (a)	239,527.33	264,013.95	239,762.97
17	Kentucky	8,719,162.21	10,531,236.14	15,387,077.63
18	Louisiana (35)	760,618.92	918,890.19	738,666.46
	Louisiana (75)			
19	Maine (35)	82,457.05	85,259.83	72,893.32
20	Maryland (35)	2,483,463.41	2,822,238.28	3,429,152.74
	Maryland (84)			
21	Massachusetts	2,699,681.20	2,937,359.07	2,753,061.97
22	Michigan	1,787,275.27	2,003,191.05	1,882,451.69
23	Minnesota	445,140.33	528,491.94	535,461.96
24	Mississippi (35)	96,122.19	94,098.00	60,479.64
25	Missouri	6,470,349.39	7,542,487.94	7,080,411.40
26	Montana (24)	44,861.67	68,001.31	75,542.81
	Montana (104)			
	Montana (105)			
27	Nebraska (24)	962,064.86	1,108,191.15	1,320,517.24
	Nebraska (106)			
28	Nevada (107)	53,421.41	49,103.93	40,870.72
	Nevada (108)			
29	New Hampshire (35)	309,720.94	349,942.04	352,998.08
	New Hampshire (111)			
30	New Jersey	4,873,676.31	5,451,633.60	5,424,457.76
31	New Mexico (4)	47,465.89	55,903.38	54,037.46
	New Mexico (116)			
32	New York	17,233,267.76	19,455,040.09	17,967,187.00
33	North Carolina	2,476,440.35	2,867,414.52	2,377,126.97
34	Ohio	19,295,835.69	18,359,209.31	15,704,047.82
35	Oregon (b) (45)	85,004.14	88,679.82	101,450.73
	Oregon (168)			
36	Pennsylvania	7,660,214.01	8,775,166.23	8,703,679.23
37	Rhode Island (35)	209,079.27	229,258.48	395,319.43
38	South Carolina	135,907.16	119,099.79	117,032.80
39	Tennessee	1,146,763.64	997,728.00	1,173,890.29
40	Texas	248,635.61	258,492.93	263,650.61
41	Utah (21)	43,116.79	48,523.08	53,895.18
42	Vermont (35)	53,145.83	56,444.58	46,062.27
43	Virginia	6,063,105.75	6,226,308.30	5,078,190.35
44	Washington (45)	32,763.73	40,202.57	49,207.54
45	West Virginia	452,596.33	502,276.56	546,483.49
46	Wisconsin	2,910,095.01	3,193,115.22	3,197,499.12
47	Wyoming (16)	18,551.18	20,385.65	17,434.54
	Total by States and Territories	127,851,634.66	138,954,165.02	137,500,291.40
1	Adhesive stamps	7,924,707.95	8,139,217.96	7,658,630.75
2	Salaries	3,021.92		
3	Passports through Department of State			
4	Fines, penalties, etc., reported by United States officers other than collectors of internal revenue			
5	Collections on articles produced in the late insurrectionary districts, made by special Treasury agents			
6	Collections made by contract under act of May 8, 1872, and covered into the Treasury			
	Aggregate receipts, including commissions allowed on sales of adhesive stamps	135,779,364.53	147,093,382.98	145,158,922.15
	Aggregate receipts, exclusive of commissions allowed on sales of adhesive stamps	135,229,912.30	146,523,273.72	144,553,344.66

OF INTERNAL REVENUE BY STATES AND TERRITORIES—Continued.

FISCAL YEAR ENDED JUNE 30—						Total.	
1884.	1885.	1886.	1887.	1888.	1889.		
$85,398.33	$73,315.34	$81,038.08	$78,542.76	$79,617.65	$92,762.36	$16,088,935.33	1
2,714.91	.....	.....	.....	.....	.....	335,350.69	2
91,009.87	67,292.48	94,893.08	97,630.38	106,541.78	120,719.22	5,272,928.81	3
799,751.22	2,379,770.63	2,090,784.84	2,081,221.57	.....	.....	80,208,067.10	4
2,585,014.73	233,389.50	.....	.....	2,199,415.11	2,097,013.18	7,114,832.52	
20,918.02	.....	.....	.....	.....	.....	2,309,945.28	5
175,081.48	105,194.89	201,482.40	260,154.86	280,053.19	294,116.03	1,406,082.91	
428,370.09	412,626.19	461,971.84	481,405.47	.....	.....	48,960,968.28	6
.....	.....	.....	.....	804,708.30	785,714.88	1,590,423.18	
9,664.22	.....	.....	.....	.....	.....	426,855.57	7
.....	.....	.....	.....	.....	.....	7,151,103.17	8
.....	.....	.....	.....	.....	.....	349,888.44	
210,327.24	244,184.44	244,476.25	263,297.80	.....	.....	3,103,619.77	
.....	.....	.....	.....	.....	.....	5,063,537.40	9
178,562.09	218,837.09	237,271.82	322,903.20	349,335.86	424,082.75	5,372,090.36	10
379,741.84	316,441.40	301,384.29	336,705.86	380,673.22	436,119.14	24,561,610.59	11
2,634.11	.....	.....	.....	.....	.....	727,233.58	12
23,520,484.80	23,075,864.61	23,852,252.60	24,825,704.34	30,130,995.31	31,007,419.79	512,607,328.46	13
5,618,512.22	4,031,866.00	4,873,230.48	4,259,038.68	4,139,159.32	5,788,236.34	132,798,672.24	14
2,757,416.53	2,222,059.15	2,547,340.94	1,951,124.89	518,911.17	392,576.90	38,605,030.45	15
167,351.57	170,202.02	204,145.48	211,120.11	193,819.15	183,432.22	5,476,355.57	16
18,583,172.16	14,842,475.44	15,746,040.50	12,417,529.63	14,182,687.12	16,010,814.76	244,891,885.99	17
560,184.89	538,814.89	552,115.30	543,748.98	.....	.....	30,667,480.66	18
.....	.....	.....	.....	603,915.11	632,009.20	1,235,924.37	
56,509.19	53,950.16	57,800.79	50,286.45	.....	.....	14,665,004.29	19
3,146,491.15	2,774,384.20	2,462,092.46	2,875,597.06	.....	.....	85,101,401.24	20
.....	.....	.....	.....	3,380,377.19	3,986,928.18	7,376,305.37	
2,396,590.05	2,287,453.96	2,292,678.83	2,471,131.00	2,580,071.78	2,424,536.26	201,190,368.06	21
1,419,380.97	1,528,155.16	1,671,994.45	1,801,907.37	1,774,319.01	1,962,397.59	54,612,614.93	22
493,982.05	492,704.97	534,532.31	554,088.98	510,492.15	1,377,796.81	10,532,625.64	23
50,449.53	47,951.13	47,062.35	42,608.16	.....	.....	11,167,167.30	24
6,473,806.51	6,276,165.85	7,060,651.99	7,858,789.27	7,910,063.57	7,730,608.20	151,045,560.74	25
6,986.55	.....	.....	.....	.....	.....	1,018,709.60	
118,383.13	8,272.09	.....	.....	145,835.38	162,642.81	455,133.41	26
.....	82,293.11	90,840.37	101,158.38	.....	.....	274,291.86	
153,668.18	.....	.....	.....	.....	.....	9,273,363.77	27
1,362,148.25	1,971,296.12	1,674,013.12	2,393,404.70	2,778,269.38	2,248,624.19	12,427,755.76	
3,827.20	.....	.....	.....	.....	.....	2,509,733.08	28
.....	55,938.66	62,148.42	70,419.50	.....	.....	188,506.58	
390,136.72	383,478.83	378,787.72	377,502.37	.....	.....	19,032,285.95	29
.....	.....	.....	.....	466,991.30	469,351.51	936,345.90	
3,477,222.72	3,661,358.75	3,951,675.75	4,590,161.50	4,072,240.48	4,319,618.58	117,754,140.72	30
3,874.89	.....	.....	.....	.....	.....	746,520.44	31
65,264.68	66,969.85	65,123.81	63,565.42	59,075.14	50,002.67	370,041.62	
13,760,384.10	13,823,644.60	14,365,208.96	15,101,203.03	15,417,202.97	15,648,675.01	652,869,378.89	32
1,760,966.74	1,686,828.95	1,744,959.29	1,950,701.71	2,165,168.77	2,467,150.27	42,734,549.73	33
13,520,264.56	12,565,516.62	12,921,349.10	13,898,226.86	12,416,312.98	11,566,727.51	410,588,221.98	34
10,890.36	.....	.....	.....	.....	.....	2,852,054.67	35
117,384.72	119,723.07	124,034.27	152,318.15	176,235.9.	226,524.99	916,221.13	
7,888,700.02	7,871,209.62	7,847,230.56	8,120,282.73	8,317,350.71	8,520,790.56	313,876,751.25	36
130,468.11	127,587.62	132,081.72	226,231.11	.....	.....	28,411,163.18	37
93,896.96	94,518 23	100,014.30	100,146.85	102,456.16	81,722.51	8,552,782.02	38
1,249,975.96	1,057,189.43	1,024,912.62	1,012,516.05	1,009,290.34	1,066,335.77	33,184,468.09	39
210,140.02	181,829.61	196,850 59	209,343.92	211,927.37	228.117.52	12,180,355.57	40
4,560.49	.....	.....	.....	.....	.....	922,588.97	41
30,904.88	29,889.83	32,503. 7	30,119.75	.....	.....	6,195,194.63	42
3,232,726.10	3,052,639.72	2,982,727.70	2,923,394.64	3,253,165.72	3,303,626.48	115,191,407.75	43
6,938.73	.....	.....	.....	.....	.....	803,774.13	44
560,328.28	543,188.59	486,062.88	538,266.42	565,278.66	781,603.47	14,611,181.49	45
2,993,755.62	3,033,017.78	3,095,316.65	3,179,964.01	2,985,446.09	3,096,495 92	67,245,561.32	46
1,202.68	.....	.....	.....	.....	.....	215,581.81	47
121,368,020.05	112,419,490.58	116,894,982.21	118,829,523.98	124,326,451.50	130,894,419.70	3,597,340,871.34	
183,145.69	1,630.49	7,887.23	7,777.08	23.82	14.50	209,717,255.58	1
55,627.64	.....	.....	.....	.....	.....	14,088,483.99	2
.....	.....	.....	.....	.....	.....	187,532.29	3
.....	.....	.....	.....	.....	.....	800,085.40	4
.....	.....	.....	.....	.....	.....	2,038,369.87	5
.....	.....	.....	.....	.....	.....	216,027.34	6
121,607,393.38	112,421,121.07	116,902,869 44	118,837,301.06	124,326,475.32	130,894,434.20	3,824,395,527.81	
121,590,039.83	112,421,121.07	116,902,869.44	118,837,301.06	124,326,475.32	130,894,434.20	3,812,348,665 97	

NOTES TO TABLE D.

(1) Abolished March 1, 1877.
(2) As constituted March 1, 1877; abolished August 15, 1883.
(3) The two districts of Alabama as constituted March 1, 1877, were abolished August 15, 1883, when the State was constituted one collection district, entitled the district of Alabama.
(4) Abolished September 5, 1883.
(5) Abolished January 1, 1876.
(6) The three districts into which Arkansas was divided July 13, 1866, were abolished January 1, 1876, when the State was constituted one collection district, to be known as the third district of Arkansas; title of district changed to district of Arkansas February 23, 1878.
(7) Abolished April 1, 1871.
(8) Formed by the consolidation (April 1, 1871) of districts numbered 1 and 2, July 30, 1862; abolished May 20, 1873.
(9) Formed by the consolidation (May 20, 1873) of district numbered 1, April 1, 1871, and district numbered 3, July 30, 1862.
(10) Abolished May 20, 1873.
(11) Abolished December 1, 1875.
(12) Formed by the consolidation (December 1, 1875) of districts numbered 4 and 5, July 30, 1862; abolished October 1, 1883; reconstituted August 1, 1884.
(13) Formed by the consolidation (October 1, 1883) of district numbered 4, December 1, 1875, and the State of Nevada; abolished August 1, 1884; reconstituted July 1, 1887.
(14) Abolished October 1, 1883; reconstituted August 1, 1884; abolished July 1, 1887.
(15) As constituted (October 1, 1883) by the annexation of Nevada; abolished August 1, 1884; reconstituted July 1, 1887.
(16) Abolished August 15, 1883.
(17) Formed by the consolidation (August 15, 1883) of the State of Colorado and the Territory of Wyoming, to be known as the district of Colorado.
(18) Abolished January 1, 1873.
(19) Formed by the consolidation (January 1, 1873) of districts numbered 1 and 3, August 8, 1862; abolished September 1, 1883.
(20) Formed by the consolidation (September 1, 1883) of district numbered 1, January 1, 1873, and district numbered 2, November 1, 1873, to be known as the district of Connecticut; abolished July 1, 1887.
(21) Abolished November 1, 1873.
(22) Formed by the consolidation (November 1, 1873) of districts numbered 2 and 4, August 8, 1862; abolished September 1, 1883.
(23) Formed by the consolidation (July 1, 1887) of the States of Connecticut and Rhode Island, to be known as the district of Connecticut.
(24) Abolished August 20, 1883.
(25) State of Delaware; abolished October 2, 1876.
(26) Formed by the consolidation (October 2, 1876) of the State of Delaware and nine counties of Maryland; abolished June 19, 1877.
(27) Formed by the consolidation (June 19, 1877) of the district of Delaware as constituted October 2, 1876, and two counties of Virginia; abolished July 1, 1887.
(28) Annexed to the third district of Maryland October 2, 1876.
(29) Abolished December 1, 1876.
(30) Abolished November 1, 1876.
(31) Formed by the consolidation (November 1, 1876) of districts numbered 2 and 4, May 30, 1865; abolished October 1, 1877.
(32) As constituted October 1, 1877; abolished August 7, 1883.
(33) The two districts of Georgia as constituted October 1, 1877, were abolished August 7, 1883, when the State was constituted one collection district, to be known as the district of Georgia.
(34) Formed by the consolidation (December 1, 1876) of districts numbered 1 and 3, May 30, 1865; abolished October 1, 1877.
(35) Abolished July 1, 1887.
(36) Formed by the consolidation (July 1, 1887) of district numbered 1, August 25, 1862, and district numbered 2, August 1, 1883.
(37) Formed by the consolidation (January 1, 1876) of districts numbered 2 and 6, August 25 1862; abolished August 1, 1883.
(38) Formed by the consolidation (August 1, 1883) of district numbered 2, January 1, 1876, and district numbered 3, August 25, 1862; abolished July 1, 1887.
(39) Abolished August 1, 1883.
(40) Abolished January 20, 1876.
(41) Formed by the consolidation (January 20, 1876) of districts numbered 4 and 9, August 25, 1862; abolished October 2, 1876.
(42) As constituted October 2, 1876, abolished July 1, 1887.
(43) As constituted October 2, 1876.
(44) As constituted July 1, 1887.
(45) Abolished September 1, 1883.
(46) Formed by the consolidation (September 1, 1883) of districts numbered 7 and 8, August 25, 1862; abolished July 1, 1887.
(47) Formed by the consolidation (January 1, 1876) of districts numbered 10 and 12, August 25, 1862; abolished October 2, 1876.
(48) Abolished January 9, 1876.
(49) Formed by the consolidation (January 9, 1876) of districts numbered 11 and 13, August 25, 1862; abolished October 2, 1876.
(50) Abolished October 2, 1876.
(51) As constituted October 2, 1876; abolished August 1, 1883.
(52) Formed by the consolidation (January 1, 1876) of districts numbered 2 and 3, August 15, 1862; abolished October 2, 1876.
(53) Abolished October 1, 1875.
(54) Formed by the consolidation (January 1, 1876) of districts numbered 6 and 8, August 15, 1862; abolished October 2, 1876.
(55) Formed by the consolidation (August 1, 1883) of districts numbered 4 and 6, October 2, 1876; abolished July 1, 1887.
(56) Formed by the consolidation (July 1, 1887) of district numbered 6, August 1, 1883, and district numbered 11, August 7, 1883.
(57) Formed by the consolidation (August 1, 1883) of districts numbered 1 and 7, October 2, 1876.
(58) Formed by the consolidation (January 1, 1876) of districts numbered 9 and 10, August 15, 1862; abolished August 7, 1883.
(59) Formed by the consolidation (October 1, 1875) of districts numbered 5 and 11, August 15, 1862; abolished August 7, 1883.
(60) Formed by the consolidation (August 7, 1883) of district numbered 10, January 1, 1876, and district numbered 11, October 1, 1875; abolished July 1, 1887.
(61) As constituted October 2, 1876; abolished August 20, 1883.
(62) As constituted August 20, 1883; abolished July 1, 1887.
(63) Formed by the consolidation (July 1, 1887) of districts numbered 2 and 4, August 20, 1883.
(64) Abolished October 11, 1876.
(65) Formed by the consolidation (October 11, 1876) of districts numbered 3 and 6, July 29, 1862.
(66) Abolished June 1, 1874.
(67) Formed by the consolidation (June 1, 1874) of districts numbered 1 and 2, January 25, 1866; abolished November 1, 1876.
(68) Formed by the consolidation (November 1, 1876) of district numbered 2, June 1, 1874, and district numbered 3, January 25, 1866.
(69) Abolished January 8, 1876.
(70) Formed by the consolidation (January 8, 1876) of districts numbered 4 and 5, January 25, 1866.
(71) Abolished August 7, 1883.
(72) As constituted August 7, 1883.
(73) Abolished June 1, 1877.
(74) The three districts into which Louisiana was divided, June 22, 1865, were abolished June 1, 1877, when the State was constituted one collection district, to be known as the district of Louisiana; abolished July 1, 1887.
(75) Formed by the consolidation (July 1, 1887) of the States of Louisiana and Mississippi, to be known as the district of Louisiana.
(76) Formed by the consolidation (October 2, 1876) of district numbered 1, August 12, 1862, and district numbered 2, January 1, 1876; abolished July 1, 1877.
(77) Formed by the consolidation (July 1, 1877) of district numbered 1, October 2, 1876, and dis-

NOTES TO TABLE D—Continued.

trict numbered 4, January 1, 1876, to be known as the district of Maine; abolished July 1, 1887.

(78) Formed by the consolidation (January 1 1876) of districts numbered 2 and 3, August 12, 1862; abolished October 2, 1876.

(79) Formed by the consolidation (January 1, 1876) of districts numbered 4 and 5, August 12, 1862; abolished July 1, 1877.

(80) Abolished December 1, 1871.

(81) Formed by the consolidation (December 1, 1871) of districts numbered 1 and 2, August 27, 1862; abolished October 2, 1876.

(82) Formed by the consolidation (January 1, 1876) of districts numbered 3 and 5, August 27, 1862; abolished October 2, 1876.

(83) Formed by the consolidation (August 1, 1883) of district numbered 3, October 2, 1876, and district numbered 4, August 27, 1862, to be known as the district of Maryland; abolished July 1, 1887.

(84) Formed by the consolidation (July 1, 1887) of the district of Maryland as constituted August 1, 1883, and the district of Delaware as constituted June 19, 1877, to be known as the district of Maryland.

(85) The districts of Massachusetts, as constituted August 26, 1862, were abolished April 1, 1875, when the State was divided into five collection districts numbered 1, 3, 5, 8, and 10.

(86) As constituted April 1, 1875; abolished September 8, 1876.

(87) Formed by the consolidation (September 8, 1876) of districts numbered 1 and 3, April 1, 1875; abolished August 1, 1883.

(88) Formed by the consolidation (August 1, 1883) of district numbered 3, September 8, 1876, and district numbered 5, April 1, 1875; abolished July 1, 1887.

(89) Formed by the consolidation (July 1, 1887) of district numbered 3, August 1, 1883, and district numbered 10, January 1, 1877, to be known as the third district of Massachusetts.

(90) As constituted April 1, 1875; abolished August 1, 1883.

(91) As constituted April 1, 1875; abolished January 1, 1877.

(92) Formed by the consolidation (January 1, 1877) of districts numbered 8 and 10, April 1, 1875; abolished July 1, 1887.

(93) Formed by the consolidation (March 1, 1877) of districts numbered 1 and 5, September 17, 1862; abolished August 7, 1883.

(94) Abolished September 20, 1876.

(95) Formed by the consolidation (September 20, 1876) of districts numbered 2 and 3, September 17, 1862; abolished August 7, 1883.

(96) The two districts into which Minnesota was divided, August 2, 1862, were abolished August 7, 1883, when the State was constituted one collection district, to be known as the district of Minnesota.

(97) The three districts into which Mississippi was divided, June 2, 1865, were abolished March 1, 1875, when the State was divided into two collection districts numbered 1 and 2.

(98) As constituted March 1, 1875; abolished July 1, 1877.

(99) The two districts of Mississippi as constituted March 1, 1875, were abolished July 1, 1877, when the State was constituted one collection district entitled the district of Mississippi; abolished July 1, 1887.

(100) Formed by the consolidation (August 1, 1883) of districts numbered 1 and 2, April 27, 1865; abolished July 1, 1887.

(101) Formed by the consolidation (July 1, 1887) of district numbered 1, August 1, 1883, and district numbered 4, September 20, 1876.

(102) Formed by the consolidation (September 20, 1876) of districts numbered 3 and 4, April 27, 1865; abolished July 1, 1887

(103) Formed by the consolidation (August 7, 1883) of districts numbered 5 and 6, April 27, 1865.

(104) Formed by the consolidation (August 20, 1883) of the Territories of Idaho, Montana, and Utah, to be known as the district of Montana; abolished August 1, 1884; reconstituted July 1, 1887.

(105) Formed by the consolidation (August 1, 1884) of the Territories of Idaho and Montana, to be known as the district of Montana; abolished July 1, 1887.

(106) Formed by the consolidation (August 20, 1883) of the Territory of Dakota and the State of Nebraska, to be known as the district of Nebraska.

(107) Abolished October 1, 1883.

(108) Formed by the consolidation (August 1, 1884) of the State of Nevada and the Territory of Utah, to be known as the district of Nevada; abolished July 1, 1887.

(109) Abolished December 10, 1875.

(110) The three districts into which New Hampshire was divided, August 6, 1862, were abolished December 10, 1875, when the State was constituted one collection district, to be known as the first district of New Hampshire; title of district changed to district of New Hampshire, March 17, 1882; abolished July 1, 1887.

(111) Formed by the consolidation (July 1, 1887) of the States of New Hampshire, Maine, and Vermont, to be known as the district of New Hampshire.

(112) Abolished January 7, 1876.

(113) Formed by the consolidation (January 7, 1876) of districts numbered 1 and 2, August 11, 1862.

(114) Formed by the consolidation (January 1, 1876) of districts numbered 4 and 5, August 11, 1862; abolished July 1, 1887.

(115) Formed by the consolidation (July 1, 1887) of district numbered 3, August 11, 1862, and district numbered 5, January 1, 1876.

(116) Formed by the consolidation (September 5, 1883) of the Territories of Arizona and New Mexico, to be known as the district of New Mexico.

(117) Abolished March 1, 1871.

(118) Formed by the consolidation (March 1, 1871) of districts numbered 1, 2, and 3, August 22, 1862.

(119) Formed by the consolidation (March 1, 1871) of districts numbered 4 and 6, August 22, 1862; abolished July 1, 1877.

(120) As constituted July 1, 1877.

(121) Formed by the consolidation (March 1, 1871) of districts numbered 5 and 7, August 22, 1862; abolished July 1, 1877.

(122) Formed by the consolidation (April 1, 1874) of districts numbered 8 and 9, August 22, 1862; abolished July 1, 1877.

(123) Abolished April 1, 1874.

(124) Formed by the consolidation (January 1, 1876) of districts numbered 11 and 13, August 22, 1862; abolished August 1, 1883.

(125) Formed by the consolidation (January 1, 1876) of districts numbered 10 and 12, August 22, 1862; abolished August 1, 1883.

(126) Formed by the consolidation (January 1, 1876) of districts numbered 14 and 18, August 22, 1862; abolished August 1, 1883.

(127) As constituted August 1, 1883; abolished July 1, 1887.

(128) Formed by the consolidation (July 1, 1887) of districts numbered 14 and 15, August 1, 1883.

(129) Formed by the consolidation (January 1, 1876) of districts numbered 15 and 16, August 22, 1862; abolished August 1, 1883.

(130) Formed by the consolidation (January 1, 1876) of districts numbered 17 and 20, August 22, 1862; abolished October 2, 1876.

(131) Formed by the consolidation (January 1, 1876) of districts numbered 21 and 22, August 22, 1862; abolished October 2, 1876.

(132) Formed by the consolidation (October 2, 1876) of districts numbered 20 and 21, January 1, 1876; abolished July 25, 1883.

(133) Formed by the consolidation (July 25, 1883) of district numbered 21, October 2, 1876, and districts numbered 24 and 26, January 1, 1876.

(134) Formed by the consolidation (January 1, 1876) of districts numbered 23 and 24, August 22, 1862; abolished July 25, 1883.

(135) Abolished November 1, 1875.

(136) Formed by the consolidation (January 1, 1876) of districts numbered 19 and 26, August 22, 1862; abolished July 25, 1883.

NOTES TO TABLE D—Continued.

(137) Abolished June 1, 1872.
(138) Formed by the consolidation (June 1, 1872) of districts numbered 27 and 31, August 22, 1862; abolished October 2, 1876.
(139) Formed by the consolidation (November 1, 1875) of districts numbered 25 and 28, August 22, 1862; abolished October 2, 1876.
(140) As constituted October 2, 1876; abolished August 7, 1883.
(141) Formed by the consolidation (August 7, 1883) of districts numbered 28 and 30, October 2, 1876.
(142) Formed by the consolidation (January 1, 1876) of districts numbered 29 and 30, August 22, 1862; abolished October 2, 1876.
(143) Abolished July 1, 1877.
(144) Formed by the consolidation (January 1, 1876) of districts numbered 1 and 2, February 27, 1866; abolished July 21, 1883.
(145) Abolished February 1, 1876.
(146) Formed by the consolidation (February 1, 1876) of districts numbered 3 and 4, February 27, 1866; abolished July 21, 1883.
(147) As constituted July 21, 1883; abolished January 31, 1885; reconstituted June 1, 1885; abolished July 1, 1887.
(148) As constituted January 31, 1885; abolished June 1, 1885.
(149) Abolished July 21, 1883.
(150) Abolished January 1, 1877.
(151) Formed by the consolidation (January 1, 1877) of districts numbered 6 and 7, February 27, 1866; abolished January 31, 1885; reconstituted June 1, 1885; abolished July 1, 1887.
(152) As constituted January 31, 1885; abolished June 1, 1885.
(153) Formed by the consolidation (April 1, 1871) of districts numbered 1 and 2, August 19, 1862; abolished July 1, 1887.
(154) Formed by the consolidation (July 1, 1887) of district numbered 1, April 1, 1871, and district numbered 6, August 1, 1883.
(155) Formed by the consolidation (January 1, 1876) of districts numbered 4 and 5, August 19, 1862; abolished August 1, 1883.
(156) Formed by the consolidation (August 1, 1883) of districts numbered 3 and 6, August 19, 1862; abolished July 1, 1887.
(157) Abolished January 5, 1876.
(158) Formed by the consolidation (January 5, 1876) of districts numbered 7 and 8, August 19, 1862; abolished October 2, 1876.
(159) As constituted October 2, 1876; abolished July 25, 1883.
(160) Formed by the consolidation (January 1, 1876) of districts numbered 9 and 10, August 19, 1862; abolished August 1, 1883.
(161) Formed by the consolidation (August 1, 1883) of districts numbered 4 and 10, January 1, 1876.
(162) Formed by the consolidation (January 1, 1876) of districts numbered 11 and 12, August 19, 1862; abolished July 25, 1883.
(163) Formed by the consolidation (July 25, 1883) of district numbered 7, October 2, 1876, and district numbered 11, January 1, 1876.
(164) Formed by the consolidation (January 1, 1876) of districts numbered 13 and 14, August 19, 1862; abolished October 2, 1876.
(165) Formed by the consolidation (January 1, 1876) of districts numbered 15 and 16, August 19, 1862; abolished August 1, 1883.
(166) Formed by the consolidation (January 1, 1876) of districts numbered 17, 18, and 19, August 19, 1862; abolished October 2, 1876.
(167) Formed by the consolidation (August 1, 1883) of district numbered 15, January 1, 1876, and district numbered 18, October 2, 1876.
(168) Formed by the consolidation (September 1, 1883) of the State of Oregon and the Territory of Washington, to be known as the district of Oregon.
(169) Formed by the consolidation (April 1, 1871) of districts numbered 1 and 3, August 11, 1862; abolished August 1, 1875.
(170) Formed by the consolidation (August 1, 1875) of district numbered 1, April 1, 1871, and of district numbered 2, January 2, 1872; abolished October 2, 1876.
(171) As constituted October 2, 1876; abolished August 15, 1883.
(172) As constituted August 15, 1883.
(173) As constituted August 15, 1883; abolished July 1, 1887.
(174) Abolished January 2, 1872.
(175) Formed by the consolidation (January 2, 1872) of districts numbered 2 and 4, August 11, 1862; abolished August 1, 1875.
(176) Formed by the consolidation (January 1, 1876) of districts numbered 5 and 6, August 11, 1862; abolished October 2, 1876.
(177) Abolished January 1, 1875.
(178) Formed by the consolidation (January 1, 1876) of districts numbered 8 and 10, August 11, 1862; abolished October 2, 1876.
(179) Formed by the consolidation (January 1, 1875) of districts numbered 7 and 9, August 11, 1862; abolished October 2, 1876.
(180) Formed by the consolidation (January 1, 1876) of districts numbered 12 and 13, August 11, 1862; abolished October 2, 1876.
(181) Formed by the consolidation (October 2, 1876) of districts numbered 14 and 18, August 11, 1862; abolished August 15, 1883.
(182) Abolished September 10, 1876.
(183) Formed by the consolidation (September 16, 1876) of districts numbered 16 and 17, August 11, 1862; abolished August 15, 1883.
(184) Formed by the consolidation (August 1, 1883) of districts numbered 19 and 20, October 2, 1876; abolished July 1, 1887.
(185) As constituted January 1, 1876; abolished October 2, 1876.
(186) Abolished November 15, 1873.
(187) The two districts into which Rhode Island was divided August 8, 1862, were abolished November 15, 1873, when the State was constituted one collection district, entitled the first district of Rhode Island; title of district changed to district of Rhode Island May 16, 1885; abolished July 1, 1887.
(188) Abolished June 1, 1876.
(189) Formed by the consolidation (June 1, 1876) of districts numbered 1 and 3, May 20, 1865; abolished November 1, 1876.
(190) The two districts of South Carolina as constituted May 30, 1865, and June 1, 1876, respectively, were abolished November 1, 1876, when the State was constituted one collection district, entitled the district of South Carolina.
(191) Formed by the consolidation (October 11, 1876) of districts numbered 1 and 2, May 19, 1866; abolished August 10, 1883.
(192) As constituted August 10, 1883.
(193) Formed by the consolidation (January 1, 1876) of districts numbered 5 and 6, May 19, 1866; abolished October 2, 1876.
(194) Formed by the consolidation (October 2, 1876) of districts numbered 3 and 4, May 19, 1866, and of district numbered 5, January 1, 1876; abolished August 10, 1883.
(195) As constituted August 10, 1883.
(196) Abolished January 3, 1876.
(197) Formed by the consolidation (January 3, 1876) of districts numbered 7 and 8, May 19, 1866; abolished August 10, 1883.
(198) Abolished December 1, 1874.
(199) Formed by the consolidation (December 1, 1874) of districts numbered 1 and 2, June 5, 1865; abolished October 1, 1881.
(200) Abolished October 1, 1881.
(201) As constituted October 1, 1881.
(202) Formed by the consolidation (July 1, 1887) of districts numbered 1 and 3, October 1, 1881.
(203) The districts of Vermont as constituted August 6, 1862, were abolished February 1, 1874, when the State was divided into two collection districts numbered 2 and 3.
(204) As constituted February 1, 1874; abolished December 15, 1875.
(205) The two districts of Vermont as constituted February 1, 1874, were abolished December 15, 1875, when the State was constituted one collection district, entitled the second district of

NOTES TO TABLE D—Continued.

Vermont; title of district changed to district of Vermont May 7, 1881; abolished July 1, 1887.

(206) Abolished December 19, 1874.

(207) Formed by the consolidation (December 19, 1874) of districts numbered 1 and 2, April 23, 1866; abolished June 19, 1877.

(208) As constituted June 19, 1877; abolished August 13, 1883.

(209) Abolished April 1, 1875.

(210) As constituted April 1, 1875; abolished August 15, 1883.

(211) As constituted April 1, 1875; abolished December 1, 1876.

(212) Formed by the consolidation (December 1, 1876) of district numbered 5, April 1, 1875, and district numbered 8, April 23, 1866; abolished August 15, 1883.

(213) Formed by the consolidation (October 2, 1876) of districts numbered 6 and 7, April 23, 1866; abolished August 15, 1883.

(214) Formed by the consolidation (July 1, 1887) of districts numbered 4 and 6, August 15, 1883.

(215) Formed by the consolidation (October 2, 1876) of districts numbered 1 and 3, August 2, 1865; abolished August 1, 1883.

(216) The two districts of West Virginia, as constituted October 2, 1876, and August 2, 1865, respectively, were abolished August 1, 1883, when the State was constituted one collection district, entitled the district of West Virginia.

(217) Formed by the consolidation (July 1, 1887) of district numbered 1, August 26, 1862, and district numbered 3, March 1, 1872.

(218) Abolished July 1, 1871.

(219) Formed by the consolidation (July 1, 1871) of districts numbered 2 and 3, August 26, 1862; abolished July 1, 1887.

(220) Formed by the consolidation (July 1, 1887) of district numbered 2, July 1, 1871, and district numbered 6, August 26, 1862.

(221) Formed by the consolidation (March 1, 1872) of districts numbered 4 and 5, August 26, 1862; abolished July 1, 1887.

(222) Abolished March 1, 1872.

(a) By order of the Commissioner of Internal Revenue, dated January 25, 1870, so much of the Indian Territory as constitutes a part of the western judicial district of Arkansas was attached to the 3d collection district of Arkansas; by similar orders the Indian Territory was transferred and attached to the 5th district of Missouri June 12, 1872, and to the State of Kansas August 8, 1881.

(b) The Territory of Alaska was attached to Oregon December 27, 1872.

* Balance of collections not reported prior to final settlement of the collector's account.

D.—Appendix No. 1, showing the Differences between the Internal-Revenue Collections in the Districts, States, Territories, and Years Below Named, as Reported by Collectors and Published in the Several Annual Reports of the Commissioner, and the True Collections.

[Note.—These differences were mostly discovered at the final settlement of the accounts of such collectors as have retired from office after the reports for the years in which they occurred had been printed. Hence their appearance in this form.

To ascertain the exact amount collected in any one of the following-named districts, States, or Territories prior to July 1, 1888, add to or subtract from, as the case may be, the collections for that district, State, or Territory, in the "total" column in Table D, the sum or sums entered opposite the same district, State, or Territory in this appendix. The result will be the aggregate amount collected.

On pages 328, 329, 330, and 331, the signs (+) and (−) are used to denote the amounts to be added and subtracted, respectively.]

COLLECTION DISTRICTS.	COLLECTIONS— To be added.	COLLECTIONS— To be subtracted.	Fiscal year ended June 30—
ALABAMA.			
First	$815.06		1869
First	4,026.78		1873
Second	11,596.31		1867
Second	17,132.10		1868
Second	1.50		1869
Second	11,895.00		1874
Second	202.50		1883
Third		$175.27	1867
Third	443.30		1869
ARKANSAS.			
First	25,386.51		1867
First	7,399.64		1868
First		1,554.64	1873
First	304.45		1876
Second	13,918.56		1873
Third	2,460.15		1867
Third	1,410.44		1870
Third	11,860.29		1871
Third		65.99	1875
CALIFORNIA.			
First		2.00	1865
First	11,958.34		1869
First	22,440.53		1870
First	44.69		1881
Second	358.41		1863
Second		.88	1865
Second		.93	1868
Second	.92		1869
Third		.01	1863
Fourth	9.00		1873
Fifth	.75		1876
CONNECTICUT.			
First	8,863.30		1863
First		.12	1873
Second		16,278.54	1868
Third	25,876.20		1863
Third		20.00	1869
GEORGIA.			
First	4.50		1869
First	5,603.81		1871
Third	538.02		1869
Fourth	31,646.38		1872
Fourth	10,095.08		1873
ILLINOIS.			
First	318.70		1863
First		.01	1872
First	2.04		1875
Second	.01		1863
Third	2,223.14		1867
Third	4,762.21		1873
Third		4,762.21	1874
Fourth	2,333.44		1865
ILLINOIS—cont'd.			
Fourth		$2,768.04	1869
Fourth		.47	1876
Fifth	$43,514.04		1863
Fifth	7,938.29		1867
Fifth		16.40	1869
Sixth	135.71		1867
Sixth	5,929.27		1872
Sixth	4.04		1876
Seventh	4,052.44		1863
Seventh	3,165.24		1869
Seventh	3.00		1876
Eighth		44.60	1863
Eighth		1,000.00	1867
Eighth	15.25		1869
Ninth	118,709.41		1864
Ninth	89.90		1867
Ninth	4,046.99		1876
Tenth		10.00	1863
Tenth		10.00	1873
Eleventh		10.00	1863
Eleventh	.01		1873
Twelfth	745.68		1869
Thirteenth		10.00	1863
Thirteenth		.20	1869
Thirteenth	71.36		1876
INDIANA.			
First	299.42		1863
First		1,292.28	1869
First		2,226.67	1870
First		.01	1877
Second	322.05		1865
Second	4.80		1871
Third	65,276.75		1863
Third		450.91	1865
Fourth		61.73	1867
Fifth	11.02		1876
Seventh		8.91	1867
Eighth		10.00	1863
Ninth	1,924.25		1867
Tenth	18,100.00		1863
Tenth		734.77	1869
Tenth	.02		1876
Eleventh		1,929.58	1867
IOWA.			
First		418.20	1867
Second		75.02	1867
Second	11,292.44		1869
Third	327.82		1863
Third		3,876.43	1866
Third	4,037.52		1869
Fourth		102.90	1867
Fourth		122.59	1872
Fifth		1,000.00	1863
Fifth		1,950.32	1865
Fifth		441.39	1867
Sixth	.01		1867
Sixth	.04		1869
Sixth		68.85	1873

D.—DIFFERENCES BETWEEN REPORTED AND TRUE COLLECTIONS, ETC.—Continued.

COLLECTION DISTRICTS.	COLLECTIONS— To be added.	COLLECTIONS— To be subtracted.	Fiscal year ended June 30—
KENTUCKY.			
First	$20,061.40		1865
First		$0.56	1866
First	14,752.99		1869
First	337.37		1874
Second		46,964.78	1866
Second	549.26		1873
Second	318.85		1877
Third		4,088.65	1866
Third	20,430.99		1867
Fourth		184,367.15	1863
Fourth		5,973.97	1867
Fourth		397.52	1869
Fourth		10.40	1874
Fourth		49.75	1876
Fifth	88,812.67		1866
Fifth		175.48	1869
Fifth		27,204.07	1876
Sixth		11,104.92	1866
Sixth	66.50		1869
Seventh		400.29	1869
Seventh	119.92		1877
Ninth		192.50	1867
Ninth	82,234.93		1869
LOUISIANA.			
First		918.09	1864
First	1,072.45		1865
First	.90		1874
Second	4,053.97		1867
Second	2,000.00		1871
Second	844.09		1873
Third		73.51	1875
MAINE.			
First	12,446.01		1869
First		.03	1887
Second	.71		1867
Second		.66	1869
Third	50.56		1873
Fifth		3.24	1867
MARYLAND.			
First	10,592.38		1867
First	1,139.96		1869
First	10.32		1872
Second	62.30		1864
Second		384.00	1865
Second		92.34	1866
Second		443.95	1869
Third		593.78	1863
Third		26,811.32	1866
Third	100.00		1869
Third		3.96	1873
Fourth	6,135.10		1867
Fourth	1.00		1869
Fifth	50,590.86		1863
Fifth	1,897.02		1864
Fifth	2,899.00		1865
Fifth	7,558.58		1867
Fifth	23,805.63		1872
Fifth	786.88		1876
MASSACHUSETTS.			
Second		401.03	1863
Second		750.00	1866
Third	3,715.62		1864
Third		.02	1866
Third	2,382.25		1869
Fourth	888.80		1873
Fifth		541.73	1868
Fifth		59.32	1869
Fifth	399.98		1873
Sixth		71.10	1867
MASSACHUSETTS—continued.			
Sixth		$0.07	1871
Seventh		21.30	1863
Eighth		117.42	1863
Eighth		476.96	1867
Ninth	$2.00		1869
MICHIGAN.			
First	88,830.24		1863
First	1,977.26		1869
First		448.06	1873
First	4.58		1876
Second		27.76	1863
Second		4.23	1867
Second		1,039.48	1869
Second	4.60		1874
Third		.01	1865
Third		1,720.00	1867
Third		.20	1873
Fourth		10.00	1867
Fifth	28,022.31		1863
Fifth	17,949.41		1866
Fifth		1,328.01	1867
Fifth	2,993.91		1869
Fifth	.11		1872
Sixth	1.68		1863
Sixth	.01		1867
Sixth	456.25		1871
MINNESOTA.			
First		2.00	1867
Second		95.77	1867
Second	.05		1870
Second	9.25		1872
MISSISSIPPI.			
First		219.99	1873
First		99.96	1875
First	326.31		1877
First	7.50		1879
Second	212,160.95		1867
Second		73.61	1874
Second	.03		1875
Second	.16		1877
Third	5,763.22		1870
Third		834.63	1873
Third	717.06		1875
MISSOURI.			
First		3.81	1863
First		3,513.74	1865
First		.09	1867
First	15,130.83		1869
First	5,438.01		1874
First		9,202.61	1883
Second		875.74	1864
Second	337.46		1867
Second		10.00	1873
Third		.07	1865
Third	119.65		1867
Third		11,118.01	1869
Third		2.00	1877
Fourth	648.31		1869
Fifth		.01	1867
Sixth		2.62	1869
Sixth	7,439.37		1871
Sixth	944.70		1873
Sixth	12.30		1876
NEW HAMPSHIRE.			
Second		20.22	1868
Third	13.34		1870

D.—Appendix No. 1, showing the differences between the Internal-Revenue Collections in the Districts, States, Territories, and Years below named, as reported by Collectors and published in the several Annual Reports of the Commissioner, and the true Collections.

[Note.—These differences were mostly discovered at the final settlement of the accounts of such collectors as have retired from office after the reports for the years in which they occurred had been printed. Hence their appearance in this form.

To ascertain the exact amount collected in any one of the following-named districts, States, or Territories prior to July 1, 1888, add to or subtract from, as the case may be, the collections for that district, State, or Territory, in the "total" column in Table D, the sum or sums entered opposite the same district, State, or Territory in this appendix. The result will be the aggregate amount collected.

On pages 328, 329, 330, and 331, the signs (+) and (−) are used to denote the amounts to be added and subtracted, respectively.]

COLLECTION DISTRICTS.	COLLECTIONS— To be added.	COLLECTIONS— To be subtracted.	Fiscal year ended June 30—
ALABAMA.			
First	$815.06		1869
First	4,026.78		1873
Second	11,596.31		1867
Second	17,132.10		1868
Second	1.50		1869
Second	11,895.00		1874
Second	202.50		1883
Third		$175.27	1867
Third	443.30		1869
ARKANSAS.			
First	25,386.51		1867
First	7,399.64		1868
First		1,554.64	1873
First	304.45		1876
Second	13,918.56		1873
Third	2,460.15		1867
Third	1,410.44		1870
Third	11,860.29		1871
Third		65.99	1875
CALIFORNIA.			
First		2.00	1865
First	11,958.34		1869
First	22,440.53		1870
First	44.69		1881
Second	358.41		1863
Second		.88	1865
Second		.93	1868
Second	.92		1869
Third		.01	1863
Fourth	9.00		1873
Fifth	.75		1876
CONNECTICUT.			
First	8,863.30		1863
First		.12	1873
Second		16,278.54	1868
Third	25,876.20		1863
Third		20.00	1869
GEORGIA.			
First	4.50		1869
First	5,603.81		1871
Third	538.02		1869
Fourth	31,646.38		1872
Fourth	10,095.08		1873
ILLINOIS.			
First	318.70		1863
First		.01	1872
First	2.04		1875
Second	.01		1863
Third	2,223.14		1867
Third	4,762.21		1873
Third		4,762.21	1874
Fourth	2,333.44		1865
ILLINOIS—cont'd.			
Fourth		$2,768.04	1869
Fourth		.47	1876
Fifth	$43,514.04		1863
Fifth	7,938.29		1867
Fifth		16.40	1869
Sixth	135.71		1867
Sixth	5,929.27		1872
Sixth	4.04		1876
Seventh	4,052.44		1863
Seventh	3,165.24		1869
Seventh	3.00		1876
Eighth		44.60	1863
Eighth		1,000.00	1867
Eighth	15.25		1869
Ninth	118,709.41		1864
Ninth	89.90		1867
Ninth	4,046.99		1876
Tenth		10.00	1863
Tenth		10.00	1873
Eleventh		10.00	1863
Eleventh	.01		1873
Twelfth	745.68		1869
Thirteenth		10.00	1863
Thirteenth		.20	1869
Thirteenth	71.36		1876
INDIANA.			
First	299.42		1863
First		1,292.28	1869
First		2,226.67	1870
First	.01		1877
Second	322.05		1865
Second	4.80		1871
Third	65,276.75		1863
Third		450.91	1865
Fourth		61.73	1867
Fifth	11.02		1876
Seventh		8.91	1867
Eighth		10.00	1863
Ninth	1,924.25		1867
Tenth	18,100.00		1863
Tenth		734.77	1869
Tenth	.02		1876
Eleventh		1,929.58	1867
IOWA.			
First		418.20	1867
Second		75.02	1867
Second	11,292.44		1869
Third	327.82		1863
Third		3,876.43	1866
Third	4,037.52		1869
Fourth		102.98	1867
Fourth		122.59	1872
Fifth		1,000.00	1863
Fifth		1,950.32	1865
Fifth		441.39	1867
Sixth	.01		1867
Sixth	.04		1869
Sixth		68.85	1873

D.—DIFFERENCES BETWEEN REPORTED AND TRUE COLLECTIONS, ETC.—Continued.

COLLECTION DISTRICTS.	COLLECTIONS— To be added.	COLLECTIONS— To be subtracted.	Fiscal year ended June 30—
KENTUCKY.			
First	$20,061.40		1865
First		$0.56	1866
First	14,752.99		1869
First	337.37		1874
Second		46,964.78	1866
Second	549.26		1873
Second	318.85		1877
Third		4,088.65	1866
Third	20,430.99		1867
Fourth		184,367.15	1863
Fourth		5,973.97	1867
Fourth		397.52	1869
Fourth		10.40	1874
Fourth		49.75	1876
Fifth	88,812.67		1866
Fifth		175.48	1869
Fifth		27,204.07	1876
Sixth		11,104.92	1866
Sixth	66.50		1869
Seventh		400.29	1869
Seventh	119.92		1877
Ninth		192.50	1867
Ninth	82,234.93		1869
LOUISIANA.			
First		918.09	1864
First	1,072.45		1865
First	.90		1874
Second	4,053.97		1867
Second	2,000.00		1871
Second	844.09		1873
Third		73.51	1875
MAINE.			
First	12,446.01		1869
First		.03	1887
Second	.71		1867
Second		.66	1869
Third	50.56		1873
Fifth		3.24	1867
MARYLAND.			
First	10,592.38		1867
First	1,139.96		1869
First	10.32		1872
Second	62.30		1864
Second		384.00	1865
Second		92.34	1866
Second		443.95	1869
Third		593.78	1863
Third		26,811.32	1866
Third	100.00		1869
Third		3.96	1873
Fourth	6,135.10		1867
Fourth	1.00		1869
Fifth	50,590.86		1863
Fifth	1,897.02		1864
Fifth	2,899.00		1865
Fifth	7,558.58		1867
Fifth	23,805.63		1872
Fifth	786.88		1876
MASSACHUSETTS.			
Second		401.03	1863
Second		750.00	1866
Third	3,715.62		1864
Third		.02	1866
Third	2,382.25		1869
Fourth	888.80		1873
Fifth		541.73	1868
Fifth		59.32	1869
Fifth	399.98		1873
Sixth		71.10	1867
Sixth		$0.07	1871
Seventh		21.30	1863
Eighth		117.42	1863
Eighth		476.96	1867
Ninth	$2.00		1869
MICHIGAN.			
First	88,830.24		1863
First	1,977.26		1869
First		448.06	1873
First	4.58		1876
Second		27.76	1863
Second		4.23	1867
Second		1,039.48	1869
Second	4.60		1874
Third		.01	1865
Third		1,720.00	1867
Third		.20	1873
Fourth		10.00	1867
Fifth	28,022.31		1863
Fifth	17,949.41		1866
Fifth		1,328.01	1867
Fifth	2,993.91		1869
Fifth	.11		1872
Sixth	1.68		1863
Sixth	.01		1867
Sixth	456.25		1871
MINNESOTA.			
First		2.00	1867
Second		95.77	1867
Second	.05		1870
Second	9.25		1872
MISSISSIPPI.			
First		219.99	1873
First		99.96	1875
First	326.31		1877
First	7.50		1879
Second	212,160.95		1867
Second		73.61	1874
Second	.03		1875
Second	.16		1877
Third	5,763.22		1870
Third		834.63	1873
Third	717.06		1875
MISSOURI.			
First		3.81	1863
First		3,513.74	1865
First		.09	1867
First	15,130.83		1869
First	5,438.01		1874
First		9,202.61	1883
Second		875.74	1864
Second	337.46		1867
Second		10.00	1873
Third		.07	1865
Third	119.65		1867
Third		11,118.01	1869
Third		2.00	1877
Fourth	648.31		1869
Fifth		.01	1867
Sixth		2.62	1869
Sixth	7,439.37		1871
Sixth	944.70		1873
Sixth	12.30		1876
NEW HAMPSHIRE.			
Second		20.22	1868
Third	13.34		1876

D.—DIFFERENCES BETWEEN REPORTED AND TRUE COLLECTIONS, ETC.—Continued.

COLLECTION DISTRICTS.	COLLECTIONS— To be added.	COLLECTIONS— To be subtracted.	Fiscal year ended June 30—
NEW JERSEY.			
First		$225.99	1867
Second		2,225.60	1867
Second	$2,225.60		1869
Fourth	5,798.01		1867
Fourth	.02		1871
Fifth	2,202.92		1866
Fifth		1,250.00	1867
Fifth		1,880.22	1870
NEW YORK.			
First	.99		1871
Second	11,497.02		1868
Third	57.20		1869
Third		9,382.12	1870
Fourth	1,131.82		1869
Fourth		10.50	1870
Fifth	60.50		1863
Fifth		657.14	1868
Fifth	41,092.76		1871
Sixth		436.91	1865
Sixth	4,122.91		1871
Seventh		11,733.65	1867
Eighth	65,636.46		1863
Eighth		3,408.31	1867
Eighth		298.00	1869
Eighth	111.50		1870
Ninth	.50		1869
Ninth		.12	1871
Ninth	100.00		1873
Tenth		5 00	1863
Tenth		.30	1864
Tenth	.10		1873
Eleventh	1.50		1870
Twelfth		.40	1863
Twelfth		.40	1866
Twelfth		70.00	1870
Thirteenth		3,591.44	1867
Thirteenth		15.58	1872
Fifteenth		230.00	1885
Sixteenth		1,300.00	1868
Seventeenth		35.00	1868
Seventeenth	.01		1876
Nineteenth	.01		1869
Twenty-first	3,047.95		1867
Twenty-second	103.51		1870
Twenty-third	.60		1863
Twenty-third	.01		1867
Twenty-fourth	.02		1863
Twenty-fourth		463.76	1869
Twenty-fourth		1,000.00	1871
Twenty-fourth		.70	1875
Twenty-fourth	.70		1876
Twenty-fifth		6,882.24	1865
Twenty-fifth		426.87	1867
Twenty-fifth		426.87	1875
Twenty-fifth	426.87		1876
Twenty-sixth		800.00	1869
Twenty-seventh		6,545.07	1868
Twenty-seventh		6,042.83	1870
Twenty-seventh	137.70		1872
Twenty-seventh		124.34	1874
Twenty-eighth		130.51	1863
Twenty-eighth		1,926.87	1869
Twenty-ninth	19,332.21		1866
Twenty-ninth	1.50		1869
Twenty-ninth	.50		1876
Thirtieth		227,482.13	1867
Thirtieth	31.25		1870
Thirtieth	1.40		1875
Thirty-second	77.31		1869
Thirty-second	3,859.93		1870

COLLECTION DISTRICTS.	COLLECTIONS— To be added.	COLLECTIONS— To be subtracted.	Fiscal year ended June 30—
NORTH CAROLINA.			
First		$774.15	1869
First	$370.33		1874
Second	2,962.78		1870
Second	401.20		1874
Third	8,634.12		1873
Fourth	3,791.24		1869
Fourth	509.88		1876
Fifth	220.40		1885
Sixth	33.50		1872
Sixth	52.90		1875
Seventh	11.20		1869
Seventh	856.38		1877
OHIO.			
First		333.90	1867
First	.03		1873
First		.01	1886
Second		5,823.16	1867
Second	1,157.95		1869
Third		8.10	1863
Third		8,192.70	1868
Fourth	71,451.46		1863
Fourth	192,200.20		1866
Fourth	37,656.96		1867
Fourth	5,005.00		1876
Fifth	1,231.41		1869
Fifth	2,165.41		1881
Sixth	383.88		1867
Sixth	8.00		1869
Seventh	.20		1877
Eighth		10.00	1863
Eighth	15.00		1871
Ninth		37.27	1867
Tenth		9,320.16	1866
Tenth	24,923.87		1869
Eleventh		764.40	1867
Twelfth	95.88		1876
Thirteenth		.05	1875
Fourteenth	1.00		1863
Fifteenth	2,003.59		1869
Fifteenth	1,579.94		1878
Sixteenth	656.29		1869
Sixteenth	810.72		1873
Eighteenth		404.69	1870
Eighteenth	241.67		1879
Nineteenth		99.56	1863
PENNSYLVANIA.			
First		13,225.29	1866
First		.04	1868
First		2.50	1869
First	4,877.85		1870
First		23.05	1873
Third		10,500.93	1866
Third	1,042.12		1871
Fourth	219,154.70		1865
Fourth		.01	1867
Fourth	19,526.59		1869
Fifth		15,884.24	1866
Fifth		12.50	1867
Sixth		12.00	1864
Sixth		1.36	1869
Sixth	1,555.95		1873
Seventh		943.20	1865
Seventh		1,041.01	1867
Seventh	600.00		1875
Ninth	9,528.04		1863
Ninth	15,701.17		1867
Tenth	.03		1876
Eleventh		273.58	1866
Eleventh		.41	1869

DIFFERENCES BETWEEN REPORTED AND TRUE COLLECTIONS, ETC.—Continued.

LECTION STRICTS.	COLLECTIONS— To be added.	COLLECTIONS— To be subtracted.	Fiscal year ended June 30—
SYLVANIA—ntinued.			
ith		$1.00	1873
h		.12	1869
h		.06	1867
enth		2.1	1870
enth		93,416.45	1865
enth	$97,808.82		1869
enth	.10		1877
nth	.20		1873
nth	150.00		1872
eenth		14.99	1867
enth		149.90	1865
enth		3,648.95	1866
enth	43,333.43		1867
enth	42,902.73		1869
enth	916.99		1869
enth	.65		1876
enth	.02		1866
ieth		4,944.08	1864
ieth	.09		1865
ieth	773.09		1870
ieth		101.00	1875
y-first		.01	1872
y-second		211.71	1864
y-second		55.00	1867
y-second		100.00	1876
y-third	2,796.82		1870
y-fourth	4,319.90		1869
DE ISLAND.			
		.40	1863
	.02		1874
		209.70	1863
		.02	1874
H CAROLINA.			
	74.28		1867
		9,433.62	1868
	24.46		1869
		48.50	1872
i	5,219.15		1870
	231.29		1871
NNESSEE.			
		94.95	1871
		39.67	1877
i		27,172.51	1866
i	12,864.11		1869
	2,203.22		1867
	2,939.67		1875
h	18,770.08		1869
h	4,165.90		1874
h	134.52		1877
	1,577.82		1869
		20.00	1874
	166.95		1878
		621.45	1885
	12,249.97		1867
	5,004.79		1869
	229.72		1870
	5,240.44		1871
	5,027.52		1873
th		2,062.26	1867
th	1.50		1873
th		534.65	1876
h		136.20	1876

COLLECTION DISTRICTS.	COLLECTIONS— To be added.	COLLECTIONS— To be subtracted.	Fiscal year ended June 30—
TEXAS.			
First	$1,610.28		1869
First	4,235.59		1873
First	.01		1875
Second	8,741.76		1869
Second	529.83		1874
Second	424.53		1875
Third		$244.03	1869
Third	4,360.91		1870
Third	984.02		1873
Third	49.36		1874
Third	478.00		1876
Fourth		1,151.50	1868
Fourth		1,973.63	1869
VERMONT.			
Second	15.90		1876
Third	17,073.38		1874
Third		1.00	1876
VIRGINIA.			
First		64,207.52	1866
First		10.00	1872
Second	1,613.64		1866
Second	43,561.26		1869
Second	.48		1878
Second	.95		1875
Third	63,647.86		1868
Third	4.00		1869
Third	2,859.10		1875
Third	338.49		1877
Fourth	19.03		1869
Fourth	2,304.56		1871
Fourth	.08		1885
Fifth	36,654.86		1869
Sixth		1,598.77	1870
Sixth	.04		1883
Sixth	.24		1884
Seventh	.50		1869
WEST VIRGINIA.			
First	105.39		1863
First		1,154.23	1867
Second	2,521.91		1867
Third	7,440.03		1867
Third		169.29	1870
Third	1.00		1871
WISCONSIN.			
First		4,000.00	1866
First		100,380.41	1870
Second		.01	1867
Second		36.30	1871
Second	36.30		1873
Third	100.00		1871
Fourth		3,125.06	1863
Fifth	1,670.93		1867
Sixth	510.88		1869
Sixth	15.07		1871

D.—DIFFERENCES BETWEEN REPORTED

	STATES AND TERRITORIES.	FISCAL YEAR ENDED JUNE 30—				
		1863.	1864.	1865.	1866.	1867.
1	Alabama					+$11,421.04
2	Arizona					
3	Arkansas					+27,846.66
4	California	+$358.40		—$2.88		
5	Colorado					
6	Connecticut	+34,739.50				
7	Dakota					
8	Delaware	—.21				
9	District of Columbia	+86,748.08				
10	Florida					
11	Georgia					
12	Idaho					
13	Illinois	+47,810.59	+$118,709.41	+2,333.44		+9,387.04
14	Indiana	+83,666.17		—128.86		—75.97
15	Iowa	—672.18		—1,950.32	—$3,876.43	—1,037.58
16	Kansas					+156,680.59
17	Kentucky	—184,367.15		+20,061.40	+26,653.76	+14,264.52
18	Louisiana		—918.09	+1,072.45		+4,053.97
19	Maine					—2.53
20	Maryland	+49,997.08	+1,959.32	+2,515.00	—26,903.66	+24,286.06
21	Massachusetts	—539.75	+3,715.62		—750.02	—548.96
22	Michigan	+116,826.47		—.01	+17,949.41	—3,062.22
23	Minnesota					—97.77
24	Mississippi					+312,160.95
25	Missouri	—3.81	—875.74	—3,513.81		+457.01
26	Montana					
27	Nebraska	+81.00				—641.57
28	Nevada				+31,476.50	
29	New Hampshire					
30	New Jersey				+2,202.92	+2,090.42
31	New Mexico					
32	New York	+65,561.67	—.30	—7,819.15	+19,331.81	—243,594.44
33	North Carolina					
34	Ohio	+71,334.80			+182,880.04	+31,082.11
35	Oregon		—1,670.07	—527.56		
36	Pennsylvania	+9,528.04	—5,167.79	+124,645.24	—43,532.99	+57,911.03
37	Rhode Island	—210.10				
38	South Carolina					+74.23
39	Tennessee				—27,172.51	+12,370.93
40	Texas					
41	Utah					
42	Vermont					
43	Virginia				—62,593.88	
44	Washington	+6,897.17				
45	West Virginia	+105.39				+8,807.71
46	Wisconsin	—3,125.06			—4,000.00	+1,670.92
47	Wyoming					
	Total	+384,736.10	+115,752.36	+137,184.94	+111,664.95	+325,511.05

AND TRUE COLLECTIONS, ETC.—Continued.

FISCAL YEAR ENDED JUNE 30—							
1868.	1869.	1870.	1871.	1872.	1873.	1874.	
+$17,132.10	+$1,259.86				+$4,026.78	+$11,895.09	1
			−$20.01				2
+7,899.64		+$1,410.44	+11,860.29		+12,363.92		3
−.93	+11,959.26	+22,440.58			+9.00		4
							5
−16,278.54	−20.00				−.12		6
							7
							8
							9
					−180.07		10
	+542.52		+5,603.81	+$31,646.38	+10,095.08		11
							12
	+1,141.53			+5,929.26	+4,752.22	−4,762.21	13
	−2,027.05	−2,226.67	+4.80				14
	+15,380.00			−122.59	−68.85		15
							16
	+96,081.13				+549.26	+326.97	17
			+2,000.00		+844.09	+.90	18
	+12,445.35				+50.56		19
	+797.01			+23,815.95	−3.96		20
−541.78	+2,324.93		−.07		+888.80		21
	+3,931.69		+456.25	+.11	−448.26	+4.60	22
		+.05		+9.25			23
		+5,763.22			−1,054.62	−73.61	24
	+4,638.51		+7,439.37		+934.70	+5,438.01	25
	+.02				−.07		26
					−6,007.92		27
							28
							29
−20.22							30
	+2,225.60	−1,880.22	+.62				31
		+3,330.09				−699.00	32
+2,959.81	−2,220.29	−11,397.76	+44,216.54	+122.12	+100.10	−124.34	33
	+3,028.29	+2,962.78		+83.50	+8,634.12	+771.53	34
−8,192.70	+29,971.11	−404.69	+2,180.41		+810.75		35
							36
−.04	+165,470.64	+8,445.57	+1,042.12	+149.99	+1,532.10		37
							38
−9,433.62	+34.46	+5,219.15	+231.29	−48.50			39
	+38,216.80	+229.72	+5,145.49		+5,029.02	+4,145.90	40
−1,151.50	+8,134.38	+4,360.91			+5,219.61	+579.19	41
	−1.87						42
						+17,078.38	43
+63,647.86	+80,239.65	−1,598.77	+2,304.56	−10.00			44
−298.89			−4,466.08		+.05		45
		−169.29	+1.00				46
	+510.88	−100,380.41	+78.77		+86.30		47
+55,221.24	+474,034.41	−63,895.35	+78,078.56	+61,525.47	+48,111.69	+34,576.32	

D.—DIFFERENCES BETWEEN REPORTED

	STATES AND TERRITORIES.	FISCAL YEAR ENDED JUNE 30—					
		1875.	1876.	1877.	1878.	1879.	1880.
1	Alabama						
2	Arizona						
3	Arkansas	—$65.99	+$304.45				
4	California		+.75				
5	Colorado		+.30				
6	Connecticut						
7	Dakota					+$7.10	
8	Delaware						
9	District of Columbia						
10	Florida						
11	Georgia						
12	Idaho						
13	Illinois	+2.04	+4,124.92				
14	Indiana		+11.04	+$0.01			
15	Iowa						
16	Kansas						
17	Kentucky		—27,253.82	+488.77			
18	Louisiana	—73.51					
19	Maine						
20	Maryland		+786.88				
21	Massachusetts	+399.98					
22	Michigan		+4.58				
23	Minnesota						
24	Mississippi	+617.13		+326.47		+7.50	
25	Missouri		+12.30	—2.00			
26	Montana						
27	Nebraska						
28	Nevada		+3.75				
29	New Hampshire		+13.34				
30	New Jersey						
31	New Mexico		—1,115.50				
32	New York	—426.17	+428.08				
33	North Carolina	+52.90	+509.88	+856.38			
34	Ohio	—.05	+5,100.88	+.20	+$1,579.94	+241.67	
35	Oregon						
36	Pennsylvania	+499.00	—99.33	+.10			
37	Rhode Island						
38	South Carolina						
39	Tennessee	+2,939.67	—670.85	+94.85	+166.95		
40	Texas	+424.54	+478.00				
41	Utah					+52.14	
42	Vermont		+14.90				
43	Virginia	+2,860.05		+338.49	+.48		
44	Washington	+.02					
45	West Virginia						
46	Wisconsin						
47	Wyoming						
	Total	+7,229.61	—17,345.45	+2,053.27	+1,747.37	+308.41	

AND TRUE COLLECTIONS, ETC.—Continued.

FISCAL YEAR ENDED JUNE 30—								Total.	
1881.	1882.	1883.	1884.	1885.	1886.	1887.	1888.		
.....	.....	+$202.50	.....	.....	.....	.....	.....	+$45,937.28	1
.....	.....	.....	.....	.....	.....	.....	.....	−20.01	2
.....	.....	.....	.....	.....	.....	.....	.....	+61,119.41	3
+$44.69	.....	.....	.....	.....	.....	.....	.....	+34,908.82	4
.....	.....	.....	.....	.....	.....	.....	.....	+.30	5
.....	.....	.....	.....	.....	.....	.....	.....	+18,440.84	6
.....	.....	.....	.....	.....	.....	.....	.....	+7.10	7
.....	.....	.....	.....	.....	.....	.....	.....	−.21	8
.....	.....	.....	.....	.....	.....	.....	.....	+86,748.08	9
.....	.....	.....	.....	.....	.....	.....	.....	−180.97	10
.....	.....	.....	.....	.....	.....	.....	.....	+47,887.79	11
.....	.....	.....	.....	.....	.....	.....	.....	.....	12
.....	.....	.....	.....	.....	.....	.....	.....	+189,428.24	13
.....	.....	.....	.....	.....	.....	.....	.....	+79,223.47	14
.....	.....	.....	.....	.....	.....	.....	.....	+7,602.05	15
.....	.....	.....	.....	.....	.....	.....	.....	+156,680.59	16
.....	.....	.....	.....	.....	.....	.....	.....	−53,245.16	17
.....	.....	.....	.....	.....	.....	.....	.....	+6,979.81	18
.....	.....	.....	.....	.....	.....	−$0.03	.....	+12,493.35	19
.....	.....	.....	.....	.....	.....	.....	.....	+77,249.68	20
.....	.....	.....	.....	.....	.....	.....	.....	+3,949.70	21
.....	.....	.....	.....	.....	.....	.....	.....	+135,662.62	22
.....	.....	.....	.....	.....	.....	.....	.....	−88.47	23
.....	.....	.....	.....	.....	.....	.....	.....	+217,747.04	24
.....	.....	−9,302.61	.....	.....	.....	.....	.....	+5,341.93	25
.....	.....	.....	.....	.....	+$12.82	.....	.....	+12.77	26
.....	.....	.....	.....	.....	.....	.....	.....	−6,568.49	27
.....	.....	.....	.....	.....	.....	.....	.....	+31,480.25	28
.....	.....	.....	.....	.....	.....	.....	.....	−6.88	29
.....	.....	.....	.....	.....	.....	.....	.....	+4,644.74	30
.....	.....	.....	.....	.....	.....	.....	.....	+1,515.59	31
.....	.....	.....	.....	−$230.00	.....	.....	.....	−132,592.32	32
.....	.....	.....	.....	+220.40	.....	.....	.....	+17,069.78	33
.....	.....	.....	.....	.....	−.01	.....	.....	+316,584.46	34
.....	.....	.....	.....	.....	.....	.....	.....	−2,197.03	35
.....	.....	.....	.....	.....	+.02	.....	.....	+320,423.70	36
.....	.....	.....	.....	.....	.....	.....	.....	−210.10	37
.....	.....	.....	.....	.....	.....	.....	.....	−3,922.99	38
.....	.....	.....	.....	−621.45	.....	.....	.....	+39,874.52	39
.....	.....	.....	.....	.....	.....	.....	.....	+18,045.13	40
.....	.....	.....	.....	.....	.....	.....	.....	+50.27	41
.....	.....	.....	.....	.....	.....	.....	.....	+17,088.28	42
.....	.....	+.04	+$0.24	+.08	.....	.....	.....	+85,188.80	43
.....	.....	.....	.....	.....	.....	.....	.....	+2,132.27	44
.....	.....	.....	.....	.....	.....	.....	.....	+8,744.81	45
.....	.....	.....	.....	.....	.....	.....	.....	−105,208.60	46
.....	.....	.....	.....	.....	.....	.....	.....	.....	47
+44.69	.....	−9,090.07	+.24	−630.97	+12.88	−.03	.....	+1,746,921.64	

D.—APPENDIX No. 2, SHOWING, BY COLLECTION DISTRICTS, STATES, AND TERRITORIES, THE AGGREGATE AMOUNT OF INTERNAL REVENUE (INCLUDED IN TABLE D) RETURNED DIRECTLY TO THE OFFICE OF THE COMMISSIONER, BY BANKS, INSURANCE, RAILROAD, CANAL, AND TURNPIKE COMPANIES, FROM SEPTEMBER 1, 1862, TO JUNE 30, 1867. (THESE TAXES WERE ALL PAID BEFORE THE CONSOLIDATION OF DISTRICTS WAS COMMENCED. THE DISTRICTS ARE THEREFORE GIVEN AS THEY WERE NUMBERED JUNE 30, 1867.)

COLLECTION DISTRICTS.	Amount collected.
ALABAMA.	
First	$31,246.89
Second	2,873.47
Third	668.86
Total	34,789.22
ARKANSAS.	
First	23.87
Second	.....
Third	.....
Total	23.87
CALIFORNIA.	
First	329,398.12
Second	469.16
Third	1,230.06
Fourth	16,016.84
Fifth	3,583.75
Total	350,697.93
CONNECTICUT.	
First	755,531.32
Second	424,241.63
Third	285,047.07
Fourth	264,927.34
Total	1,729,747.36
GEORGIA.	
First	4,483.11
Second	19,155.39
Third	4,380.13
Fourth	.....
Total	28,018.63
ILLINOIS.	
First	880,271.48
Second	18,586.07
Third	15,391.06
Fourth	18,018.84
Fifth	28,911.07
Sixth	13,686.17
Seventh	9,137.52
Eighth	53,414.34
Ninth	6,229.70
Tenth	28,981.55
Eleventh	2,439.11
Twelfth	19,223.72
Thirteenth	9,788.69
Total	1,104,079.32
INDIANA.	
First	69,630.65
Second	81,606.80
Third	53,366.23
Fourth	15,825.86
Fifth	52,638.39
Sixth	154,780.77
Seventh	110,402.18
Eighth	40,715.33
Ninth	27,475.85
Tenth	$35,382.84
Eleventh	3,873.57
Total	645,698.47
IOWA.	
First	67,016.43
Second	36,711.62
Third	54,457.09
Fourth	15,825.95
Fifth	16,808.19
Sixth	1,374.49
Total	192,193.77
KENTUCKY.	
First	76,257.43
Second	25,465.28
Third	456,082.76
Fourth	234,038.22
Fifth	49,226.63
Sixth	9,440.68
Seventh	428.95
Eighth	239.01
Ninth	51.66
Total	851,230.62
LOUISIANA.	
First	350,108.74
Second	.....
Third	1,955.47
Total	352,064.21
MAINE.	
First	249,396.46
Second	66,712.06
Third	117,591.58
Fourth	70,122.82
Fifth	48,307.34
Total	552,129.76
MARYLAND.	
First	28,850.22
Second	3,800.68
Third	1,001,230.63
Fourth	107,896.88
Fifth	11,043.41
Total	1,152,881.32
MASSACHUSETTS.	
First	403,723.33
Second	173,976.49
Third	2,888,547.96
Fourth	274,150.30
Fifth	302,379.39
Sixth	174,378.50
Seventh	242,885.26
Eighth	248,481.81
Ninth	189,346.10
Tenth	278,327.18
Total	5,176,196.32

D.—COLLECTIONS PAID DIRECTLY TO COMMISSIONER'S OFFICE, ETC.—Continued.

COLLECTION DISTRICTS.	Amount collected.
MICHIGAN.	
First	$107,397.51
Second	8,727.45
Third	15,553.75
Fourth	7,516.63
Fifth	14,487.54
Sixth	16,463.41
Total	170,146.29
MINNESOTA.	
First	6,654.87
Second	27,589.02
Total	34,243.89
MISSISSIPPI.	
First	
Second	
Third	
Total	
MISSOURI.	
First	501,037.20
Second	27,184.42
Third	47,364.23
Fourth	7,756.40
Fifth	963.66
Sixth	12,336.79
Total	596,642.70
NEW HAMPSHIRE.	
First	139,498.65
Second	175,013.00
Third	56,452.57
Total	370,964.22
NEW JERSEY.	
First	79,796.86
Second	162,153.87
Third	223,506.09
Fourth	74,718.61
Fifth	571,373.27
Total	1,111,548.70
NEW YORK.	
First	28,829.31
Second	57,676.72
Third	414,276.45
Fourth	1,196,200.95
Fifth	378,876.33
Sixth	408,007.59
Seventh	152,392.24
Eighth	203,216.02
Ninth	48,731.90
Tenth	87,877.16
Eleventh	119,783.63
Twelfth	234,613.09
Thirteenth	80,762.93
Fourteenth	681,574.66
Fifteenth	255,611.31
Sixteenth	24,986.10
Seventeenth	47,070.99
Eighteenth	108,786.55
Nineteenth	104,429.38
Twentieth	156,912.77
Twenty-first	129,509.72
Twenty-second	106,709.72
Twenty-third	$151,990.41
Twenty-fourth	120,275.91
Twenty-fifth	56,666.80
Twenty-sixth	81,192.77
Twenty-seventh	52,596.37
Twenty-eighth	212,753.26
Twenty-ninth	49,001.03
Thirtieth	355,882.41
Thirty-first	65,392.15
Thirty-second	6,800,663.60
Total	12,973,250.23
NORTH CAROLINA.	
First	
Second	80.39
Third	326.19
Fourth	
Fifth	
Sixth	
Seventh	
Total	406.58
OHIO.	
First	344,020.83
Second	91,412.23
Third	110,538.67
Fourth	85,136.06
Fifth	5,953.25
Sixth	15,917.39
Seventh	147,630.08
Eighth	33,600.83
Ninth	55,009.71
Tenth	44,510.88
Eleventh	36,081.21
Twelfth	54,701.00
Thirteenth	37,915.80
Fourteenth	24,302.25
Fifteenth	27,053.48
Sixteenth	28,435.45
Seventeenth	62,533.63
Eighteenth	683,579.93
Nineteenth	43,868.07
Total	1,932,206.75
PENNSYLVANIA.	
First	2,979,561.10
Second	198,140.02
Third	75,386.04
Fourth	50,800.48
Fifth	33,322.17
Sixth	94,707.11
Seventh	85,197.69
Eighth	56,072.55
Ninth	140,151.15
Tenth	131,397.05
Eleventh	234,915.27
Twelfth	82,492.42
Thirteenth	21,604.66
Fourteenth	125,798.76
Fifteenth	142,254.01
Sixteenth	53,710.99
Seventeenth	13,596.61
Eighteenth	68,689.80
Nineteenth	46,708.25
Twentieth	160,514.00
Twenty-first	15,209.65
Twenty-second	874,286.37

D.—COLLECTIONS PAID DIRECTLY TO COMMISSIONER'S OFFICE, ETC.—Continued.

COLLECTION DISTRICTS.	Amount collected.
PENNSYLVANIA—continued.	
Twenty-third	$51,490.02
Twenty-fourth	42,395.87
Total	5,778,402.04
RHODE ISLAND.	
First	867,458.57
Second	75,963.84
Total	943,422.41
SOUTH CAROLINA.	
First	
Second	255.48
Third	
Total	255.48
TENNESSEE.	
First	40,778.65
Second	87,043.49
Third	
Fourth	
Fifth	
Sixth	
Seventh	
Eighth	
Total	127,817.14
TEXAS.	
First	2,841.70
Second	
Third	181.34
Fourth	
Total	3,023.04

COLLECTION DISTRICTS.	Amount collected.
VERMONT.	
First	$156,478.48
Second	110,833.29
Third	103,084.18
Total	370,395.95
VIRGINIA.	
First	24,649.13
Second	1,128.60
Third	3,668.04
Fourth	1,222.87
Fifth	456.62
Sixth	420.76
Seventh	
Eighth	
Total	31,545.51
WEST VIRGINIA.	
First	73,925.86
Second	18,678.07
Third	2,173.74
Total	94,777.67
WISCONSIN.	
First	116,068.87
Second	35,788.93
Third	7,369.76
Fourth	19,664.68
Fifth	8,561.17
Sixth	13,718.59
Total	195,770.70

D.—COLLECTIONS PAID DIRECTLY TO COMMISSIONER'S OFFICE, ETC.—Continued.

STATES AND TERRITORIES.	Amount collected.	STATES AND TERRITORIES.	Amount collected.
Alabama	$34,789.22	Missouri	$596,642.70
Arizona		Montana	382.16
Arkansas	22.87	Nebraska	3,851.80
California	350,607.93	Nevada	6,753.42
Colorado	5,879.21	New Hampshire	370,964.22
Connecticut	1,729,747.86	New Jersey	1,111,548.70
Dakota		New Mexico	
Delaware	133,716.98	New York	12,973,250.23
District of Columbia	105,782.56	North Carolina	406.56
Florida		Ohio	1,932,206.75
Georgia	28,018.62	Oregon	3,491.91
Idaho		Pennsylvania	5,778,402.04
Illinois	1,104,679.32	Rhode Island	943,422.41
Indiana	645,698.47	South Carolina	255.48
Iowa	192,193.77	Tennessee	127,817.14
Kansas	19,384.73	Texas	3,023.04
Kentucky	851,230.62	Utah	489.86
Louisiana	352,064.21	Vermont	370,395.95
Maine	552,129.76	Virginia	31,545.51
Maryland	1,152,881.32	Washington	
Massachusetts	5,176,196.32	West Virginia	94,777.67
Michigan	176,146.29	Wisconsin	195,770.70
Minnesota	34,243.89		
Mississippi		Total	37,183,802.73

E.—STATEMENT OF THE RECEIPTS FROM SPECIFIC AND GENERAL SOURCES OF

[Articles and occupations marked thus (a), against which no collections or comparatively small col-
under more

	ARTICLES AND OCCUPATIONS.	FISCAL YEAR ENDED JUNE 30—		
		1863.	1864.	1865.
	ARTICLES AND OCCUPATIONS NOW TAXABLE, INCLUDING PENALTIES.			
	Spirits.			
1	Spirits distilled from whatever materials	$3, 229, 990. 79	$28, 431, 797. 83	$3, 862, 820. 66
2	Spirits distilled from materials other than grapes (a)			10, 679, 462. 14
3	Spirits distilled from apples, peaches, or grapes (a)			12, 005. 33
4	Spirits distilled from materials other than apples, peaches, or grapes (a)			1, 453, 418. 86
5	Wine, in imitation of champagne, etc			8, 477. 08
6	Distilleries, per diem tax on			
7	Distillers (special tax)	38, 632. 31	49, 022. 41	59, 897. 57
8	Rectifiers and compounders of liquors (special tax)	45, 993. 79	58, 828. 28	48, 781. 52
9	Retail liquor dealers (special tax)	1, 477, 753. 54	1, 612, 736. 25	2, 205, 866. 38
10	Wholesale liquor dealers (special tax)	384, 160. 07	176, 764. 76	400, 692. 91
11	Manufacturers of stills (special tax) (a)			
12	Stills or worms manufactured (special tax) (a)			
13	Stamps for distilled spirits intended for export			
14	distillery warehouse			
15	for rectified spirits			
16	wholesale liquor dealers			
17	for stock on hand			
18	Gaugers' fees in excess of $250 per month			
19	Stamps, special bonded warehouse			
20	special bonded warehouse (rewarehousing)			
21	for imported spirits			
22	Interest on tax upon spirits			
	Total	5, 176, 530. 50	30, 329, 149. 53	18, 731, 422. 45
	Tobacco.			
23	Cigars and cheroots	476, 589. 29	1, 255, 424. 79	3, 072, 476. 56
24	Cigarettes			14, 944. 95
25	Manufacturers of cigars (special tax) (a)			
26	Snuff	84, 406. 18	240, 934. 24	283, 361. 92
27	Tobacco of all descriptions	2, 578, 972. 43	7, 086, 684. 74	8, 017, 020. 63
28	Stamps for tobacco or snuff intended for export			
29	Stamps for cigars intended for export			
30	Dealers in leaf-tobacco not over 25,000 pounds (special tax) (a)			
31	leaf-tobacco (special tax) (a)			
32	retail, in leaf-tobacco (special tax) (a)			
33	in manufactured tobacco (special tax)	7, 592. 57	9, 055. 21	13, 579. 04
34	Manufacturers of tobacco (special tax) (a)			
35	Peddlers of tobacco (special tax) (a)			
36	Collections relating to tobacco, not otherwise herein provided for			
	Total	3, 097, 620. 47	8, 592, 098. 98	11, 401, 373. 10
	Fermented liquors.			
37	Fermented liquors	1, 558, 083. 41	2, 223, 719. 73	3, 657, 181. 06
38	Brewers (special tax)	70, 850. 41	66, 289. 41	77, 747. 00
39	Retail dealers in malt liquors (special tax) (a)			
40	Wholesale dealers in malt liquors (special tax) (a)			
	Total	1, 628, 933. 82	2, 290, 009. 14	3, 734, 928. 06
	Oleomargarine.			
41	Oleomargarine			
42	Manufacturers of oleomargarine (special tax)			
43	Retail dealers in oleomargarine (special tax)			
44	Wholesale dealers in oleomargarine (special tax)			
	Total			

INTERNAL REVENUE, BY FISCAL YEARS, FROM SEPTEMBER 1, 1862, TO JUNE 30, 1889.

lections appear in the early years named in this table, were taxed in those years, but were reported general heads.

FISCAL YEAR ENDED JUNE 30—						
1866.	1867.	1868.	1869.	1870.	1871.	
						1
						2
$283,499.84	$868,145.03	$871,638.24	$510,111.57	$611,914.01	$1,236,005.67	3
29,198,578.15	28,296,264.31	13,419,092.74	33,225,212.11	38,633,184.13	29,921,308.48	4
14,501.64	2,760.63	4,119.95	565.60	11.50		5
			1,319,911.89	2,127,506.30	1,901,602.98	6
101,534.37	231,777.86	196,657.37	4,030,683.33	6,493,974.15	5,683,077.31	7
61,300.91	80,470.06	87,770.28	655,133.19	1,054,241.64	959,800.18	8
2,807,225.59	2,966,683.73	3,242,915.31	3,047,754.35	3,577,874.90	3,651,484.78	9
801,531.32	1,006,850.10	834,037.01	1,676,090.80	2,253,030.25	2,151,281.06	10
			2,716.65	2,388.15	1,927.49	11
			7,760.00	5,260.00	3,240.00	12
						13
			192,229.00	305,509.75	249,699.00	14
			143,085.50	375,274.25	374,723.00	15
			149,206.75	141,429.25	134,005.00	16
			65,341.00			17
			44,829.12	24,494.97	13,693.20	18
						19
						20
						21
						22
33,268,171.82	33,542,951.72	18,655,630.90	45,071,230.86	55,606,094.15	46,281,848.10	
3,474,438.94	b3,661,984.39	b2,951,675.26	4,957,679.67	5,697,353.87	6,569,568.02	23
1,797.92			3,273.00	21,426.17	28,605.22	24
			81,022.57	124,606.50	142,192.40	25
698,173.80	758,364.69	745,308.24	525,583.87	373,784.52	427,017.96	26
12,339,921.93	15,245,477.81	14,947,107.53	16,845,479.77	23,926,698.90	25,133,521.71	27
			18,192.50	48,097.50	66,147.00	28
						29
						30
			115,596.53	200,205.54	221,661.98	31
						32
16,675.24	59,321.52	86,004.29	851,799.94	929,892.64	970,017.96	33
			32,079.72	28,612.24	20,174.93	34
						35
						36
16,531,007.83	19,765,148.41	18,730,095.32	23,430,707.57	31,350,707.88	33,578,907.18	
5,115,140.49	5,819,345.49	5,685,663.70	5,866,400.98	6,081,520.54	7,159,740.20	37
105,412.23	238,155.14	270,205.22	233,478.56	237,606.36	229,761.62	38
						39
						40
5,220,552.72	6,057,500.63	5,955,868.92	6,099,879.54	6,319,126.90	7,389,501.82	
						41
						42
						43
						44

b Cigarettes were taxed in 1867 and 1868 at the same rates as cigars, and were returned with them.

E.—STATEMENT OF THE RECEIPTS FROM SPECIFIC AND

	ARTICLES AND OCCUPATIONS.	FISCAL YEAR ENDED JUNE 30—		
		1872.	1873.	1874.
	ARTICLES AND OCCUPATIONS NOW TAXABLE, INCLUDING PENALTIES—continued.			
	Spirits.			
1	Spirits distilled from whatever materials			
2	Spirits distilled from materials other than grapes (a)			
3	Spirits distilled from apples, peaches, or grapes (a)	$544,848.83	$2,014,645.60	$536,681.41
4	Spirits distilled from materials other than apples, peaches, or grapes (a)	32,572,940.16	41,116,419.18	43,270,412.29
5	Wine, in imitation of champagne, etc	20.00	3,531.90	151.00
6	Distilleries, per diem tax on	2,010,986.53	472,480.09	79,750.17
7	Distillers (special tax)	6,469,786.01	1,639,298.42	
8	Rectifiers and compounders of liquors (special tax)	955,704.91	459,423.87	287,825.92
9	Retail liquor dealers (special tax)	4,028,604.93	5,016,904.10	4,321,505.25
10	Wholesale liquor dealers (special tax)	2,065,563.63	936,106.61	596,555.45
11	Manufacturers of stills (special tax) (a)	1,391.66	1,393.26	945.01
12	Stills or worms manufactured (special tax) (a)	4,260.00	3,260.00	2,500.00
13	Stamps for distilled spirits intended for export		7,081.50	12,795.50
14	distillery warehouse	290,264.00	148,418.80	116,909.30
15	for rectified spirits	367,424.00	186,100.60	156,730.80
16	wholesale liquor dealers	139,602.75	73,767.00	61,327.65
17	for stock on hand			
18	Gaugers' fees in excess of $250 per month	4,118.95	520.85	
19	Stamps, special bonded warehouse			
20	special bonded warehouse (rewarehousing)			
21	for imported spirits			
22	Interest on tax upon spirits			
	Total	49,475,516.36	52,099,371.78	49,444,089.85
	Tobacco.			
23	Cigars and cheroots	7,535,074.61	8,899,792.98	9,289,896.49
24	Cigarettes	31,082.25	49,658.50	43,695.75
25	Manufacturers of cigars (special tax) (a)	161,766.79	153,223.07	149,036.58
26	Snuff	497,092.49	1,082,048.60	1,032,445.92
27	Tobacco of all descriptions	24,073,883.10	22,315,809.62	20,900,500.67
28	Stamps for tobacco or snuff intended for export	53,576.25	5,594.60	6,735.40
29	Stamps for cigars intended for export			
30	Dealers in leaf-tobacco not over 25,000 pounds (special tax) (a)			
31	in leaf-tobacco (special tax) (a)	260,487.02	110,514.60	106,304.36
32	retail, in leaf-tobacco (special tax) (a)		8,003.14	9,637.52
33	in manufactured tobacco (special tax)	1,102,357.89	1,663,552.02	1,641,937.79
34	Manufacturers of tobacco (special tax) (a)	21,049.52	11,868.20	11,578.76
35	Peddlers of tobacco (special tax) (a)		50,694.96	44,671.30
36	Collections relating to tobacco, not otherwise herein provided for		44,602.80	376.08
	Total	33,736,170.52	34,386,303.09	33,242,875.62
	Fermented liquors.			
37	Fermented liquors	8,009,969.72	8,910,823.83	8,880,822.68
38	Brewers (special tax)	248,528.74	304,650.21	245,212.47
39	Retail dealers in malt liquors (special tax) (a)		85,976.26	147,294.74
40	Wholesale dealers in malt liquors (special tax) (a)		23,487.54	31,342.83
	Total	8,258,498.46	9,324,937.84	9,304,679.72
	Oleomargarine.			
41	Oleomargarine			
42	Manufacturers of oleomargarine (special tax)			
43	Retail dealers in oleomargarine (special tax)			
44	Wholesale dealers in oleomargarine (special tax)			
	Total			

GENERAL SOURCES OF INTERNAL REVENUE, ETC.—Continued.

FISCAL YEAR ENDED JUNE 30—						
1875.	1876.	1877.	1878.	1879.	1880.	
						1
						2
$1,265,896.46	$592,166.59	$1,373,255.73	$992,634.58	$919,099.74	$905,201.75	3
45,612,041.64	50,798,323.84	51,298,035.61	44,633,898.48	46,790,364.50	55,013,917.43	4
18.00						5
15,327.82						6 7
249,591.11	252,241.96	219,291.79	210,068.70	160,123.21	172,904.60	8
4,086,393.77	3,991,945.06	3,840,469.09	3,875,973.26	3,903,036.24	4,172,283.85	9
534,839.20	504,029.93	449,729.03	434,708.35	409,115.56	406,526.72	10
1,837.92	1,183.35	1,277.18	1,068.77	1,315.88	1,787.53	11
2,890.00	2,500.00	2,209.29	1,980.00	2,210.00	4,360.00	12
782.60	1,805.10	4,598.60	6,890.50	17,212.20	19,743.60	13
102,483.30	96,411.10	106,263.40	101,494.90	126,374.50	149,505.00	14
148,283.80	131,703.80	130,903.50	120,469.00	122,503.20	133,193.70	15
61,605.50	54,054.40	43,396.50	41,021.90	43,804.90	47,339.10	16
						17
						18
			294.10	225.30	364.90	19
					1.00	20
					285.20	21
			313.26	74,899.48	158,994.41	22
52,081,991.12	56,426,365.13	57,469,429.72	50,420,815.80	52,570,284.69	61,185,508.79	
10,140,384.11	10,969,787.28	10,799,459.20	11,430,144.60	12,115,468.29	14,206,819.49	23
65,443.42	135,485.17	261,818.95	289,081.79	416,984.43	715,269.39	24
150,728.92	153,075.26	154,621.64	157,736.34	150,946.73	143,710.34	25
1,067,033.03	1,061,467.64	1,095,695.52	1,063,714.22	902,135.35	634,609.34	26
24,133,726.48	25,694,312.56	27,053,072.38	25,320,158.08	24,703,874.90	21,170,154.40	27
6,981.20	6,034.30	8,009.60	7,002.60	7,863.90	6,568.30	28
					54.10	29
						30
85,582.51	109,650.45	95,089.15	95,711.73	87,048.35	88,329.10	31
6,645.82	3,312.51	2,333.34	4,931.52	3,224.37	2,080.39	32
1,596,460.95	1,616,318.85	1,595,225.40	1,679,617.60	1,705,720.20	1,864,422.41	33
9,825.53	10,169.39	8,749.81	10,756.89	10,488.50	9,422.37	34
40,627.91	35,066.50	32,471.93	32,899.30	31,247.63	28,700.45	35
22.00						36
37,303,461.88	39,795,339.91	41,106,546.92	40,091,754.67	40,135,002.65	38,870,140.08	
8,743,744.62	9,159,675.95	9,074,305.93	9,473,360.70	10,270,352.83	12,346,077.26	37
226,423.44	222,553.68	216,681.10	212,802.77	202,779.61	201,395.97	38
141,622.46	154,236.21	147,801.03	191,595.26	191,765.41	179,043.99	39
32,213.89	34,814.82	42,001.11	59,298.05	64,422.23	103,285.62	40
9,144,004.41	9,571,280.66	9,480,789.17	9,937,051.78	10,729,320.08	12,829,802.84	
						41
						42
						43
						44

E.—STATEMENT OF THE RECEIPTS FROM SPECIFIC AND

	ARTICLES AND OCCUPATIONS.	FISCAL YEAR ENDED JUNE 30—		
		1881.	1882.	1883.
	ARTICLES AND OCCUPATIONS NOW TAXABLE, INCLUDING PENALTIES—continued.			
	Spirits.			
1	Spirits distilled from whatever materials			
2	Spirits distilled from materials other than grapes (*a*)			
3	Spirits distilled from apples, peaches, or grapes (*a*)	$1,531,075.83	$1,095,164.60	$1,127,950.25
4	Spirits distilled from materials other than apples, peaches, or grapes (*a*)	60,683,051.73	63,683,592.37	67,957,906.48
5	Wine, in imitation of champagne, etc			
6	Distilleries, per diem tax on			
7	Distillers (special tax)			
8	Rectifiers and compounders of liquors (special tax)	170,145.99	184,483.67	189,800.12
9	Retail liquor dealers (special tax)	4,322,298.21	4,455,355.55	4,624,587.77
10	Wholesale liquor dealers (special tax)	418,813.68	439,018.86	455,915.51
11	Manufacturers of stills (special tax) (*a*)	2,516.67	1,410.03	1,160.43
12	Stills or worms manufactured (special tax) (*a*)	6,880.00	4,783.00	4,020.00
13	Stamps for distilled spirits intended for export	18,470.80	9,600.10	7,434.00
14	distillery warehouse	676.50		
15	for rectified spirits	3.40		
16	wholesale liquor dealers	9.00		
17	for stock on hand			
18	Gaugers' fees in excess of $250 per month			
19	Stamps, special bonded warehouse			
20	special bonded warehouse (rewarehousing)			
21	for imported spirits	.30		
22	Interest on tax upon spirits	31.87		.64
	Total	67,153,974.88	69,873,408.18	74,368,775.20
	Tobacco.			
23	Cigars and cheroots	16,095,724.78	18,245,852.37	16,895,215.15
24	Cigarettes	992,981.22	972,570.10	929,974.73
25	Manufacturers of cigars (special tax) (*a*)	142,273.02	143,859.06	96,899.60
26	Snuff	689,183.03	778,650.87	736,022.82
27	Tobacco of all descriptions	22,833,287.60	25,033,741.97	22,136,402.53
28	Stamps for tobacco or snuff intended for export	6,767.30	6,410.80	852.00
29	Stamps for cigars intended for export	85.10	134.60	24.00
30	Dealers in leaf-tobacco not over 25,000 pounds (special tax) (*a*)	4,547.44	6,338.97	5,585.97
31	in leaf-tobacco (special tax) (*a*)	76,996.76	76,309.15	48,032.48
32	retail, in leaf-tobacco (special tax) (*a*)	1,645.83	1,037.51	916.67
33	in manufactured tobacco (special tax)	1,976,071.55	2,094,536.21	1,233,812.93
34	Manufacturers of tobacco (special tax) (*a*)	9,169.55	8,762.48	5,697.88
35	Peddlers of tobacco (special tax) (*a*)	26,258.13	22,575.22	14,813.63
36	Collections relating to tobacco, not otherwise herein provided for			
	Total	42,854,991.31	47,391,988.91	42,104,249.79
	Fermented liquors.			
37	Fermented liquors	13,237,700.63	15,680,678.54	16,426,050.11
38	Brewers (special tax)	195,308.52	195,824.31	184,685.49
39	Retail dealers in malt liquors (special tax) (*a*)	162,739.30	157,013.57	156,496.23
40	Wholesale dealers in malt liquors (special tax) (*a*)	104,492.76	120,404.00	133,183.98
	Total	13,700,241.21	16,153,920.42	16,900,615.81
	Oleomargarine.			
41	Oleomargarine			
42	Manufacturers of oleomargarine (special tax)			
43	Retail dealers in oleomargarine (special tax)			
44	Wholesale dealers in oleomargarine (special tax)			
	Total			

GENERAL SOURCES OF INTERNAL REVENUE, ETC.—Continued.

FISCAL YEAR ENDED JUNE 30—						Total.	
1884.	1885.	1886.	1887.	1888.	1889.		
.....	.....	.....	.....	.....	.....	$35, 524, 609. 28	1
.....	.....	.....	.....	.....	.....	10, 679, 462. 14	2
$1, 023, 350. 85	$1, 321, 897. 58	$1, 400, 394. 48	$1, 090, 379. 07	$799, 296. 19	$1, 124, 633. 41	24, 051, 893. 54	3
70, 631, 860. 48	60, 920, 324. 39	62, 365, 825. 13	59, 551, 972. 59	63, 609, 641. 18	68, 322, 542. 43	1, 162, 980, 128. 60	4
.....	.....	.....	.....	.....	.....	34, 157. 30	5
.....	.....	.....	.....	.....	.....	7, 832, 487. 79	6
.....	.....	.....	.....	.....	.....	25, 128, 819. 10	7
183, 872. 92	167, 930. 23	178, 650. 17	176, 600. 12	168, 316. 76	166, 645. 77	7, 605, 041. 61	8
4, 597, 139. 33	4, 641, 783. 99	4, 714, 735. 18	4, 587, 268. 21	4, 331, 040. 99	4, 296, 780. 04	102, 398, 399. 70	9
448, 840. 51	415, 503. 49	418, 406. 24	416, 304. 66	392, 129. 08	391, 975. 28	19, 909, 120. 07	10
1, 241. 67	1, 194. 20	1, 102. 90	860. 86	1, 143. 77	1, 216. 70	31, 080. 06	11
2, 920. 00	2, 665. 45	3, 000. 00	2, 860. 00	2, 410. 00	3, 160. 00	75, 147. 74	12
16, 159. 50	39, 909. 30	10, 151. 90	3, 076. 20	2, 188. 50	5, 252. 70	183, 152. 60	13
.....	.....	.....	.....	.....	.....	1, 986, 238. 55	14
.....	.....	.....	.....	.....	.....	2, 390, 398. 55	15
.....	.....	.....	.....	.....	.....	990, 570. 60	16
.....	.....	.....	.....	.....	.....	65, 341. 00	17
.....	.....	.....	.....	.....	.....	87, 657. 09	18
.....	.....	.....	.....	.....	.....	884. 30	19
.....	.....	.....	.....	.....	.....	1. 00	20
.....	.....	.....	.....	.....	.....	285. 50	21
.....	.....	.....	.....	.....	.....	234, 239. 66	22
76, 905, 385. 26	67, 511, 208. 63	69, 092, 266. 00	65, 829, 321. 71	69, 306, 166. 41	74, 312, 206. 33	1, 402, 189, 115. 87	
10, 368, 805. 27	10, 077, 287. 50	10, 532, 804. 05	11, 364, 916. 33	11, 534, 179. 95	11, 602, 156. 92	244, 220, 900. 16	23
454, 409. 01	529, 535. 88	655, 569. 55	792, 279. 60	931, 363. 05	1, 075, 830. 88	9, 404, 080. 73	24
97, 902. 19	105, 139. 81	108, 695. 45	113, 340. 00	116, 398. 09	120, 195. 53	2, 767, 429. 89	25
448, 211. 58	508, 943. 52	493, 283. 80	524, 942. 26	594, 959. 13	645, 0?9. 57	17, 988, 514. 11	26
13, 488, 047. 41	13, 953, 410. 31	14, 834, 095. 42	15, 995, 019. 46	16, 154, 049. 05	17, 076, 899. 94	502, 991, 140. 33	27
.....	.....	.....	.....	.....	.....	255, 502. 25	28
.....	.....	.....	.....	.....	.....	297. 80	29
5, 091. 58	5, 235. 56	4, 896. 70	4, 685. 39	4, 343. 04	4, 601. 95	45, 326. 60	30
43, 156. 76	47, 846. 48	48, 916. 43	46, 768. 24	40, 384. 04	43, 968. 93	2, 048, 561. 19	31
347. 48	270. 83	62. 50	437. 51	218. 75	270. 84	46, 326. 53	32
1, 136, 786. 20	1, 159, 897. 78	1, 208, 529. 17	1, 245, 412. 65	1, 268, 291. 89	1, 280, 015. 93	20, 012, 908. 83	33
5, 117. 49	5, 320. 25	5, 575. 85	5, 563. 75	5, 125. 00	5, 128. 25	240, 266. 36	34
14, 465. 01	14, 200. 56	14, 933. 61	14, 701. 94	13, 116. 53	12, 701. 88	444, 446. 49	35
.....	.....	.....	.....	.....	.....	45, 000. 88	36
26, 062, 399. 98	26, 407, 088. 48	27, 907, 362. 53	30, 108, 067. 13	30, 662, 431. 52	31, 866, 860. 42	810, 510, 702. 15	
17, 573, 722. 88	17, 747, 006. 11	19, 157, 612. 87	21, 387, 411. 79	22, 829, 202. 90	23, 235, 863. 94	295, 311, 185. 89	37
187, 9?8. 82	183, 561. 67	186, 928. 89	187, 352. 24	175, 164. 66	178, 593. 95	5, 286, 142. 49	38
182, 297. 89	161, 338. 56	169, 502. 56	177, 148. 13	148, 295. 99	139, 792. 38	2, 693, 059. 97	39
140, 944. 52	138, 875. 60	162, 686. 97	170, 275. 33	171, 554. 93	169, 584. 99	1, 702, 864. 26	40
18, 084, 954. 11	18, 230, 782. 03	19, 676, 731. 29	21, 922, 187. 49	23, 324, 218. 48	23, 723, 835. 26	304, 994, 152. 61	
.....	.....	.....	435, 924. 04	653, 355. 10	677, 302. 40	1, 766, 581. 54	41
.....	.....	.....	31, 700. 00	17, 150. 00	12, 400. 00	61, 250. 00	42
.....	.....	.....	151, 924. 00	123, 258. 54	130, 631. 51	408, 814. 05	43
.....	.....	.....	101, 400. 00	70, 376. 24	73, 914. 00	245, 690. 24	44
.....	.....	.....	723, 948. 04	864, 139. 88	894, 247. 91	2, 482, 335. 83	

E.—STATEMENT OF THE RECEIPTS FROM SPECIFIC AND

	ARTICLES AND OCCUPATIONS.	FISCAL YEAR ENDED JUNE 30—		
		1863.	1864.	1865.
	ARTICLES AND OCCUPATIONS NOW TAXABLE, INCLUDING PENALTIES—continued.			
	Bank circulation.			
45	Bank circulation		$2,056,996.30	$1,993,661.84
46	circulation over 90 per cent. of capital			
47	Banks, on amount of notes of persons, etc., paid out			
	Total		2,056,996.30	1,993,661.84
	Penalties, etc.			
48	Unassessed penalties	$27,170.14	185,224.94	326,131.23
49	Penalties upon unstamped instruments			
50	United States' share of penalties recovered by suits			75,020.68
51	Penalties received on compromises			111,355.45
52	Interest			5,120.05
53	Costs			
54	Fines, penalties, etc., reported by United States officers other than collectors		8,375.54	2,735.29
	Total	27,170.14	193,600.48	520,362.70
	Total receipts from articles and occupations now taxable, including penalties	9,930,254.93	43,461,854.43	36,381,748.15
	COLLECTIONS UNDER REPEALED LAWS. *a*			
55	Manufactures and products	16,524,989.24	36,222,716.67	73,318,450.37
56	Gross receipts	1,661,273.51	3,426,446.32	9,853,377.12
57	Sales	64,003.87	141,231.58	4,062,243.54
58	Special taxes not elsewhere enumerated	4,799,195.73	5,205,508.94	9,806,914.25
59	Income	2,741,858.25	20,294,781.74	32,050,017.44
60	Legacies	56,592.61	311,161.02	506,751.85
61	Successions			39,951.32
62	Articles in Schedule A	365,630.93	696,878.43	780,266.53
63	Bank capital and deposits		780,723.52	2,947,209.06
64	Adhesive stamps	4,140,175.29	5,894,945.14	11,162,392.14
65	Miscellaneous collections	719,218.57	709,550.73	30,220,207.40
	Total collections under repealed laws	31,072,938.00	73,683,894.09	174,747,781.02
	RECAPITULATION.			
	Total receipts from—			
I	Spirits	5,176,530.50	30,329,149.53	18,731,422.45
II	Tobacco	3,097,620.47	8,592,098.98	11,401,373.10
III	Fermented liquors	1,628,933.82	2,290,009.14	3,734,928.06
IV	Oleomargarine			
V	Bank circulation		2,056,996.30	1,993,661.84
VI	Penalties, etc., collected	27,170.14	193,600.48	520,362.70
VII	Collections under repealed laws	31,072,938.00	73,683,894.09	174,747,781.02
	Aggregate receipts, including commissions allowed on sales of adhesive stamps	41,003,192.93	117,145,748.52	211,129,529.17
	Aggregate receipts, exclusive of commissions allowed on sales of adhesive stamps	41,003,192.93	116,965,578.26	210,855,864.53

a Collections from specific sources of revenue now exempt from tax will be found in Table E, in reports for 1880 and years previous. Collections in detail from banks and bankers, however, are continued to 1883.

GENERAL SOURCES OF INTERNAL REVENUE, ETC.—Continued.

FISCAL YEAR ENDED JUNE 30—						
1866.	1867.	1868.	1869.	1870.	1871.	
$990, 225. 61	$199, 410. 49	$23, 661. 78	$14, 110. 29	$13, 615. 43	$16, 800. 83	45
52. 50	8, 865. 58	3, 240. 21	850. 58	1, 793. 51	5, 981. 09	46
.....	6, 022. 68	1, 767. 89	1, 604. 18	11. 00	.....	47
990, 278. 11	214, 298. 75	28, 669. 88	16, 565. 05	15, 419. 94	22, 781. 92	
308, 512. 64	255, 375. 77	219, 848. 14	237, 938. 49	225, 932. 24	187, 897. 27	48
.....	.....	.....	.....	.....	.....	49
271, 048. 03	352, 924. 14	843, 645. 43	504, 438. 31	360, 540. 09	249, 759. 90	50
341, 557. 91	260, 053. 99	187, 017. 82	123, 631. 20	213, 202. 74	173, 661. 19	51
11, 500. 24	11, 176. 71	6, 370. 20	7, 441. 46	12, 323. 66	14, 616. 76	52
.....	.....	.....	3, 639. 33	15, 890. 99	11, 045. 23	53
210, 234. 38	570, 640. 19	.....	.....	.....	.....	54
1, 142, 853. 20	1, 450, 170. 80	1, 256, 881. 59	877, 088. 79	827, 904. 72	636, 980. 35	
57, 102, 863. 68	61, 030, 070. 31	44, 627, 146. 61	75, 495, 471. 81	94, 119, 253. 59	87, 910, 019. 37	
127, 230, 608. 66	91, 531, 331. 31	61, 649, 902. 56	3, 345, 362. 95	3, 017, 027. 70	3, 631, 516. 10	55
11, 262, 429. 82	7, 444, 719. 00	6, 280, 069. 34	6, 300, 998. 82	6, 894, 799. 99	2, 800, 563. 44	56
4, 002, 282. 91	3, 999, 260. 31	4, 595, 909. 04	8, 206, 839. 03	8, 837, 394. 97	3, 649, 642. 08	57
14, 144, 418. 05	13, 627, 903. 25	11, 889, 549. 09	9, 940, 917. 02	11, 0. 0, 787. 78	5, 002, 452. 85	58
72, 982, 159. 03	66, 014, 429. 34	41, 455, 598. 36	34, 791, 855. 84	37, 775, 873. 62	19, 162, 650. 75	59
924, 823. 97	1, 228, 744. 96	1, 518, 387. 61	1, 244. 837. 01	1, 672, 582. 93	1, 430, 087. 34	60
246, 154. 88	636, 570. 19	1, 305, 023. 60	1, 189, 756. 22	1, 419, 242. 57	1, 074, 979. 79	61
1, 693, 122. 73	2, 116, 674. 37	1, 134, 339. 96	893, 653. 46	907, 442. 09	376, 860. 45	62
2, 473. 709. 94	1, 832, 263. 71	1, 838, 075. 67	2, 179, 489. 12	3, 004. 663. 67	3, 621, 459. 61	63
15, 044, 373. 18	12, 094, 718. 00	14, 852, 254. 02	16, 420, 710. 01	16, 544, 043. 06	15, 342, 739. 46	64
3, 750, 037. 32	354, 689. 90	34, 310. 37	29, 453. 00	22, 756. 00	8, 205. 00	65
253, 754, 120. 49	204, 881, 404. 34	146, 553, 417. 67	84, 543, 872. 48	91, 116, 614. 38	56, 101, 156. 87	
83, 268, 171. 82	33, 542, 951. 72	18, 653, 630. 90	45, 071, 230. 86	55, 606, 094. 15	46, 281, 848. 10	I
16, 531, 007. 83	19, 765, 148. 41	18, 730, 095. 32	23, 430, 707. 57	31, 350, 707. 88	33, 578, 907. 18	II
5, 220, 552. 72	6, 057, 500. 63	5, 955, 868. 92	6, 099, 879. 54	6, 319, 126. 90	7, 389, 501. 82	III
.....	.....	.....	.....	.....	.....	IV
990, 278. 11	214, 298. 75	28, 669. 88	16, 565. 05	15, 419. 94	22, 781. 92	V
1, 142, 853. 20	1, 459, 170. 80	1, 256, 881. 59	877, 088. 79	827, 904. 72	636, 980. 35	VI
253, 754, 120. 49	204, 881, 404. 34	146, 553, 417. 67	84, 543, 872. 48	91, 116, 614. 38	56, 101, 156. 87	VII
310, 906, 984. 17	265, 920, 474. 65	191, 180, 564. 28	160, 039, 344. 29	185, 235, 867. 97	144, 011, 176. 24	
310, 120, 448. 13	265, 064, 938. 43	190, 374, 925. 50	159, 124, 126. 86	184, 302, 828. 34	143, 198, 322. 10	

E.—STATEMENT OF THE RECEIPTS FROM SPECIFIC AND

	ARTICLES AND OCCUPATIONS.	FISCAL YEAR ENDED JUNE 30—		
		1872.	1873.	1874.
	ARTICLES AND OCCUPATIONS NOW TAXABLE, INCLUDING PENALTIES—continued.			
	Bank circulation.			
45	Bank circulation	$8,371.50	$6,304.21	$9,302.18
46	circulation over 90 per cent. of capital	328.22	17,975.45	129.31
47	Banks, on amount of notes of persons, etc., paid out	165.10	498.96	7,306.77
	Total	8,864.82	24,778.62	16,738.26
	Penalties, etc.			
48	Unassessed penalties	101,640.03	121,537.00	113,145.05
49	Penalties upon unstamped instruments	1,611.73	2,015.15	3,214.91
50	United States' share of penalties recovered by suits	180,603.07	142,802.31	114,630.87
51	Penalties received on compromises	134,555.68	104,506.36	81,480.32
52	Interest	11,066.72	74,764.78	32,104.17
53	Costs	12,727.89	16,027.46	19,641.02
54	Fines, penalties, etc., reported by United States officers other than collectors	.....	.....	.....
	Total	442,205.12	461,653.06	364,216.34
	Total receipts from articles and occupations now taxable, including penalties	91,921,255.28	96,297,044.39	92,372,569.79
	COLLECTIONS UNDER REPEALED LAWS. [a]			
55	Manufactures and products	4,616,144.75	1,267,470.38	[b]625,408.05
56	Gross receipts	.....	.....	.....
57	Sales	.....	.....	.....
58	Special taxes not elsewhere enumerated	.....	.....	.....
59	Income	14,436,861.78	5,062,311.62	139,472.09
60	Legacies	.....	.....	.....
61	Successions	.....	.....	.....
62	Articles in Schedule A	.....	.....	.....
63	Bank capital and deposits	4,619,364.32	3,746,252.84	3,370,422.41
64	Adhesive stamps	16,177,320.60	7,702,376.85	6,136,844.64
65	Miscellaneous collections	.....	.....	.....
	Total collections under repealed laws	39,849,691.45	17,778,411.69	10,272,147.19
	RECAPITULATION.			
	Total receipts from—			
I	Spirits	49,475,516.36	52,099,371.78	49,444,089.85
II	Tobacco	33,736,170.52	34,386,303.09	33,242,875.62
III	Fermented liquors	8,258,498.46	9,324,937.84	9,304,679.72
IV	Oleomargarine	.....	.....	.....
V	Bank circulation	8,864.82	24,778.62	16,738.26
VI	Penalties, etc., collected	442,205.12	461,653.06	364,216.34
VII	Collections under repealed laws	39,849,691.45	17,778,411.69	10,272,147.19
	Aggregate receipts, including commissions allowed on sales of adhesive stamps	131,770,946.73	114,075,456.08	102,644,746.96
	Aggregate receipts, exclusive of commissions allowed on sales of adhesive stamps	130,890,096.90	113,504,012.80	102,191,016.96

[a] See note a on page 342.

GENERAL SOURCES OF INTERNAL REVENUE, ETC.—Continued.

FISCAL YEAR ENDED JUNE 30—						
1875.	1876.	1877.	1878.	1879.	1880.	
$10,849.18	$10,149.57	$2,188.62	$1,003.72	$333.89	$236.05	45
269.17	115.95	.09	.....	.70	.....	46
11,627.93	7,682.15	3,241.45	115.00	13,568.70	28,537.32	47
22,746.27	17,947.67	5,430.16	1,118.72	13,903.29	28,773.37	
49,385.25	50,848.37	31,893.92	24,062.22	27,004.49	32,479.77	48
459.00	3,394.05	223.00	543.52	319.20	335.23	49
108,142.29	117,989.05	180,816.17	207,896.98	131,028.11	78,034.10	50
92,221.92	202,952.20	161,412.17	78,750.12	82,034.75	224,096.73	51
6,371.83	6,414.46	31,624.85	17,851.85	9,416.55	5,008.02	52
24,527.32	27,686.35	14,119.30	16,902.86	29,694.70	43,801.23	53
.....	.....	.....	.....	.....	.....	54
281,107.61	409,284.48	419,999.41	346,007.55	279,497.80	383,755.08	
98,833,311.20	106,220,217.85	108,482,195.38	100,796,748.52	103,728,008.51	113,297,980.16	
b863,851.46	b509,042.82	b238,162.76	b429,658.71	b2 9,094.00	b228,027.73	55
.....	.....	.....	.....	.....	.....	56
.....	.....	.....	.....	.....	.....	57
.....	.....	.....	.....	.....	.....	58
232.64	588.27	97.79	.....	.....	.....	59
.....	.....	.....	.....	.....	.....	60
.....	.....	.....	.....	.....	.....	61
.....	.....	.....	.....	.....	.....	62
4,074,501.85	3,988,750.36	3,824,299.17	3,490,913.13	3,184,960.30	3,322,211.91	63
6,557,220.65	6,518,487.51	6,450,429.15	6,380,405.13	6,706,384.06	7,668,394.22	64
216,027.34	.....	.....	.....	.....	.....	65
11,711,842.94	11,016,868.96	10,512,988.87	10,300,976.97	10,190,458.36	11,218,633.86	
52,081,991.12	56,426,365.13	57,469,429.72	50,420,815.80	52,570,284.69	6 ,185,508.79	I
37,303,461.88	39,795,339.91	41,106,546.92	40,091,754.67	40,135,002.65	38,870,140.08	II
9,144,004.41	9,571,280.66	9,480,789.17	9,937,051.78	10,729,320.08	12,829,802.84	III
.....	.....	.....	.....	.....	.....	IV
22,746.27	17,947.67	5,430.16	1,118.72	13,903.29	28,773.37	V
281,107.61	409,284.48	419,999.41	346,007.55	279,497.80	383,755.08	VI
11,711,842.94	11,016,868.96	10,512,988.87	10,300,976.97	10,190,458.36	11,218,633.86	VII
110,545,154.23	117,237,086.81	118,995,184.25	111,097,725.49	113,918,466.87	124,516,614.02	
110,071,515.00	116,768,096.22	118,549,230.25	110,654,163.37	113,449,621.38	123,981,916.10	

b Back collections returned by collectors from all sources other than spirits and tobacco that are exempt from tax under laws in force prior to August 1, 1872.

E.—STATEMENT OF THE RECEIPTS FROM SPECIFIC AND

	ARTICLES AND OCCUPATIONS.	FISCAL YEAR ENDED JUNE 30—		
		1881.	1882.	1883.
	ARTICLES AND OCCUPATIONS NOW TAXABLE, INCLUDING PENALTIES—continued.			
	Bank circulation.			
45	Bank circulation	$1,885.66	$203.43	$74.13
46	circulation over 90 per cent. of capital			
47	Banks, on amount of notes of persons, etc., paid out	2,409.42	4,082.34	708.22
	Total	4,295.08	4,285.77	782.35
	Penalties, etc.			
48	Unassessed penalties	28,019.75	18,910.34	19,454.97
49	Penalties upon unstamped instruments	463.49	365.00	285.48
50	United States' share of penalties recovered by suits	44,402.85	57,260.02	70,358.97
51	Penalties received on compromises	112,736.08	81,866.79	176,095.46
52	Interest	5,684.05	3,115.64	2,622.29
53	Costs	39,771.99	38,312.25	36,996.40
54	Fines, penalties, etc., reported by United States officers other than collectors			
	Total	231,078.21	199,830.04	305,803.57
	Total receipts from articles and occupations now taxable, including penalties	123,944,580.09	133,623,433.32	133,680,226.72
	COLLECTIONS UNDER REPEALED LAWS. [a]			
55	Manufactures and products	b149,140.98	b81,559.00	b71,852.43
56	Gross receipts			
57	Sales			
58	Special taxes not elsewhere enumerated			
59	Income	3,021.92		
60	Legacies			
61	Successions			
62	Articles in Schedule A			
63	Bank capital and deposits	3,757,912.99	5,249,172.70	3,748,212.25
64	Adhesive stamps	7,924,707.95	8,139,217.96	7,658,630.75
65	Miscellaneous collections			
	Total collections under repealed laws	11,834,783.84	13,469,949.66	11,478,695.43
	RECAPITULATION.			
	Total receipts from—			
I	Spirits	67,153,974.88	69,878,408.18	74,368,775.20
II	Tobacco	42,854,991.31	47,391,958.91	42,104,249.79
III	Fermented liquors	13,700,241.21	16,153,920.42	16,900,615.81
IV	Oleomargarine			
V	Bank circulation	4,295.08	4,285.77	782.35
VI	Penalties, etc., collected	231,078.21	199,830.04	305,803.57
VII	Collections under repealed laws	11,834,783.84	13,469,949.66	11,478,695.43
	Aggregate receipts, including commissions allowed on sales of adhesive stamps	135,779,364.53	147,093,382.98	145,158,922.15
	Aggregate receipts, exclusive of commissions allowed on sales of adhesive stamps	135,229,912.30	146,523,273.72	144,553,344.86

[a] See note a on page 342.

GENERAL SOURCES OF INTERNAL REVENUE, ETC.—Continued.

FISCAL YEAR ENDED JUNE 30—						Total.	
1884.	1885.	1886.	1887.	1888.	1889.		
$7.23	.....	.....	.....	$200.50	.....	$5,359,592.44	45
.....	.....	.....	.....	.....	.....	39,602.36	46
434.61	$25,000.00	.....	$4,288.37	4,002.05	$6,213.91	129,288.04	47
441.84	25,000.00	.....	4,288.37	4,202.55	6,213.91	5,528,482.84	
20,727.77	30,038.39	$24,207.04	30,792.62	20,653.24	14,553.85	2,733,294.93	48
190.00	81.00	246.02	110.56	257.73	77.00	14,192.07	49
35,591.39	102,187.45	51,483.85	19,965.02	83,533.18	17,202.65	4,351,403.01	50
203,075.96	56,735.30	90,676.94	137,027.96	76,064.03	30,030.98	3,536,800.05	51
1,310.66	5,475.31	1,903.02	2,709.18	1,672.08	692.86	288,357.40	52
28,248.34	28,163.74	25,905.58	29,599.49	23,367.35	22,344.55	508,409.37	53
.....	.....	.....	.....	.....	.....	800,985.40	54
289,144.12	222,681.19	194,422.45	220,204.83	155,547.61	84,991.89	12,233,443.13	
121,342,325.31	112,396,760.33	116,870,782.27	118,808,017.58	124,316,706.45	130,888,355.72	2,537,038,232.43	
b24,345.01	b22,730.25	b24,199.94	b21,506.41	b9,745.05	b6,063.98	425,959,909.27	55
.....	.....	.....	.....	.....	.....	55,924,677.36	56
.....	.....	.....	.....	.....	.....	37,558,907 33	57
.....	.....	.....	.....	.....	.....	85,437,646.96	58
55,627.64	.....	.....	.....	.....	.....	346,967,388.12	59
.....	.....	.....	.....	.....	.....	8,893,969.33	60
.....	.....	.....	.....	.....	.....	5,911,678.57	61
.....	.....	.....	.....	.....	.....	8,964,868.97	62
1,940.73	.....	.....	.....	.....	.....	65,056,538.26	63
183,145.69	1,630.49	7,887.23	7,777.08	23.82	14.50	209,717,255.58	64
.....	.....	.....	.....	.....	.....	36,064,455.63	65
285,068.07	24,360.74	32,087.17	29,283.49	9,768.87	6,078.48	1,286,457,295.38	
76,905,385.26	67,511,208.63	60,092,266.00	65,829,321.71	69,306,166.41	74,312,206.33	1,402,189,115.87	I
26,062,399.98	26,407,088.48	27,907,362.53	30,108,067.13	30,662,431.52	31,866,800.42	810,510,702.15	II
18,084,954.11	18,230,782.03	19,676,731.29	21,922,187.49	23,324,218.48	23,723,835.26	304,994,152.61	III
.....	.....	.....	723,948.04	864,139 88	894,247.91	2,482,335.83	IV
441.84	25,000 00	.....	4,288 37	4,202.55	6,213.91	5,528,482.84	V
289,144.12	222,681.19	194,422.45	220,204.83	155,547.61	84,991.89	12,233,443.13	VI
265,068.07	24,360.74	32,087.17	29,283.49	9,768.87	6,078.48	1,286,457,295.38	VII
121,607,393.38	112,421,121.07	116,902,869.44	118,837,301.06	124,326,475.32	130,894,434.20	3,824,395,527.81	
121,590,039.83	112,421,121.07	116,902,869.44	118,837,301.06	124,326,475.32	130,894,434.20	3,812,348,665.97	

b Back collections returned by collectors from all sources other than spirits and tobacco that are exempt from tax under laws in force prior to August 1, 1872.

F.—TABLE EXHIBITING THE PERCENTAGES OF RECEIPTS FROM SPECIFIC AND GEN BY FISCAL YEARS, FROM JULY

ARTICLES AND OCCUPATIONS.	Per cent., 1864.	Per cent., 1865.	Per cent., 1866.	Per cent., 1867.
ARTICLES AND OCCUPATIONS NOW TAXABLE, INCLUDING PENALTIES.				
Spirits.				
Spirits distilled from—				
Whatever materials	24.270448	1.829598		
Materials other than grapes		5.058251		
Apples, peaches, or grapes		.005687	.091184	.326468
Materials other than apples, peaches, or grapes		.688401	9.391420	10.640875
Wine in imitation of champagne, etc		.004015	.004664	.001038
Distilleries, per diem tax on				
Distillers (special tax)	.041847	.028370	.032658	.087160
Rectifiers and compounders of liquors (special tax)	.050218	.023105	.019717	.030261
Retail liquor dealers (special tax)	1.376892	1.044793	.902915	1.115628
Wholesale liquor dealers (special tax)	.159893	.189785	.257804	.412473
Manufacturers of stills (special tax)				
Stills or worms manufactured (special tax)				
Stamps:				
For distilled spirits intended for export				
Distillery warehouse				
For rectified spirits				
Wholesale liquor dealers				
For stock on hand				
Gangers' fees in excess of $250 per month				
Stamps:				
Special bonded warehouse				
Special bonded warehouse (rewarehousing)				
For imported spirits				
Interest on tax upon spirits				
Total	25.890098	8.872005	10.700362	12.613903
Tobacco.				
Cigars and cheroots	1.071679	1.455256	1.117519	a1.377098
Cigarettes		.007079	.000578	
Manufacturers of cigars (special tax)				
Snuff	.205670	.134208	.224560	.300227
Tobacco of all descriptions	6.049459	3.797205	3.969007	5.733096
Stamps:				
For tobacco or snuff intended for export				
Cigars intended for export				
Dealers:				
In leaf-tobacco, not over 25,000 pounds (special tax)				
In leaf-tobacco (special tax)				
Retail, in leaf-tobacco (special tax)				
In manufactured tobacco (special tax)	.007730	.006431	.005363	.022308
Manufacturers of tobacco (special tax)				
Peddlers of tobacco (special tax)				
Collections relating to tobacco not otherwise herein provided for				
Total	7.334538	5.400179	5.317027	7.432729
Fermented liquors.				
Fermented liquors	1.898251	1.782197	1.645232	2.188378
Brewers (special tax)	.056587	.036825	.033904	.089559
Retail dealers in malt liquors (special tax)				
Wholesale dealers in malt liquors (special tax)				
Total	1.954838	1.769022	1.679136	2.277937
Oleomargarine.				
Oleomargarine				
Manufacturers of oleomargarine (special tax)				
Retail dealers in oleomargarine (special tax)				
Wholesale dealers in oleomargarine (special tax)				
Total				
Bank circulation.				
Bank circulation	1.755929	.944284	.318496	.074089
circulation over 90 per cent. of capital			.000017	.003334
Banks, on amount of notes of persons, etc., paid out				.002265
Total	1.755929	.944284	.318513	.080588

a Cigarettes were taxed in 1867 and 1868 at the same

ERAL SOURCES OF INTERNAL REVENUE TO THE AGGREGATE RECEIPTS OF THE SAME, 1, 1863, TO JUNE 30, 1889.

Per cent., 1868.	Per cent., 1869.	Per cent., 1870.	Per cent., 1871.	Per cent., 1872.	Per cent., 1873.	Per cent., 1874.	Per cent., 1875.	Per cent., 1876.
.455924	.318741	.330343	.858271	.413482	1.766064	.522853	1.145140	.505102
7.019068	20.760653	20.856211	20.777074	24.719384	36.043178	42.155506	41.261005	43.329569
.002155	.000353	.000006	.....	.000015	.003096	.000147	.000016	.....
.....	.824742	1.148539	1.320455	1.526123	.414182	} .077695	.013865	.....
.102551	2.518558	3.505786	3.946275	4.925051	1.454562			
.045909	.409358	.569135	.666476	.725277	.402787	.280410	.225782	.215155
1.696258	1.904378	1.931524	2.535517	3.057279	4.397882	4.210157	3.696583	3.405019
.436256	1.047074	1.216304	1.493829	1.567541	.820603	.581185	.483820	.429924
.....	.001698	.001289	.001338	.001056	.001221	.000921	.001663	.001009
.....	.004849	.002840	.002250	.003233	.002875	.002436	.002614	.002132
.....	.....	.....	.....	.....	.006208	.012466	.000708	.001540
.....	.120114	.164930	.173389	.220279	.130106	.113897	.092707	.082236
.....	.089406	.202593	.260204	.278835	.163138	.152692	.134139	.112340
.....	.093231	.076351	.093052	.105944	.064065	.059747	.055729	.046167
.....	.040428	.....	.....	.....	.....	.....	.....	.....
.....	.028011	.013223	.009508	.003126	.000457	.....	.....	.....
.....	.....	.....	.....	.....	.....	.....	.....	.....
.....	.....	.....	.....	.....	.....	.....	.....	.....
.....	.....	.....	.....	.....	.....	.....	.....	.....
.....	.....	.....	.....	.....	.....	.....	.....	.....
9.758121	28.162594	30.019074	32.137678	37.546605	45.670974	48.170112	47.113771	48.130133
a1.543920	3.097788	3.075729	4.561846	5.718313	7.801620	9.050533	9.173069	9.356926
.....	.002045	.011567	.019863	.023588	.035642	.042570	.059201	.115565
.....	.050627	.067269	.098737	.122764	.134318	.145197	.136355	.130569
.389845	.328409	.201789	.296517	.377240	.948538	1.011689	.965246	.905403
7.818820	10.525837	12.916882	17.452480	18.269340	19.562321	20.361986	21.831555	21.916540
.....	.011367	.025066	.045932	.040659	.004904	.006562	.006315	.005710
.....	.....	.....	.....	.....	.....	.....	.....	.....
.....	.....	.....	.....	.....	.....	.....	.....	.....
.....	.072230	.108081	.153920	.197682	.096879	.103566	.077418	.093529
.....	.....	.....	.....	.....	.007016	.009438	.006011	.002825
.044986	.532244	.502005	.673571	.836571	1.458291	1.599632	1.444171	1.378675
.....	.020045	.015462	.014010	.015974	.010403	.011280	.008888	.008574
.....	.....	.....	.....	.....	.044440	.043520	.036752	.029971
.....	.....	.....	.....	.....	.039100	.000366	.000019	.....
9.797071	14.640592	16.924750	23.316876	25.602131	30.143472	32.386339	33.745000	33.944327
2.973976	3.665599	3.283123	4.971656	6.078707	7.811342	8.652006	7.909659	7.812951
.141335	.145888	.128272	.159544	.188607	.267060	.238894	.204824	.189832
.....	.....	.....	.....	.....	.075368	.143500	.128113	.131559
.....	.....	.....	.....	.....	.020590	.030535	.029141	.029696
3.115311	3.811487	3.411395	5.131200	6.267314	8.174360	9.064935	8.271737	8.164038
.....	.....	.....	.....	.....	.....	.....	.....	.....
.....	.....	.....	.....	.....	.....	.....	.....	.....
.....	.....	.....	.....	.....	.....	.....	.....	.....
.....	.....	.....	.....	.....	.....	.....	.....	.....
.....	.....	.....	.....	.....	.....	.....	.....	.....
.012377	.008817	.007350	.011666	.006353	.005526	.009062	.009814	.008657
.001695	.000531	.000968	.004153	.000249	.015758	.000126	.000244	.000099
.000924	.001002	.000006	.....	.000125	.000437	.007119	.010519	.006553
.014996	.010350	.008324	.015819	.006727	.021721	.016307	.020577	.015309

rates as cigars, and were returned with them.

F.—TABLE EXHIBITING THE PERCENTAGES OF RECEIPTS FROM

ARTICLES AND OCCUPATIONS.	Per cent., 1877.	Per cent., 1878.	Per cent., 1879.	Per cent., 1880.
ARTICLES AND OCCUPATIONS NOW TAXABLE, INCLUDING PENALTIES—continued.				
Spirits.				
Spirits distilled from—				
Whatever materials				
Materials other than grapes				
Apples, peaches, or grapes	1.154043	.893479	.806905	.726978
Materials other than apples, peaches, or grapes	43.109388	40.175349	41.073555	44.181900
Wine in imitation of champagne, etc				
Distilleries, per diem tax on } Distillers (special tax) }				
Rectifiers and compounders of liquors (special tax)	.184286	.189085	.140560	.138133
Retail liquor dealers (special tax)	3.227416	3.488796	3.426167	3.350785
Wholesale liquor dealers (special tax)	.377939	.391285	.359130	.326484
Manufacturers of stills (special tax)	.001073	.000962	.001155	.001436
Stills or worms manufactured (special tax)	.001857	.001782	.001940	.002502
Stamps:				
For distilled spirits intended for export	.003864	.006202	.015109	.015856
Distillery warehouse	.089301	.091856	.110934	.120068
For rectified spirits	.110007	.108435	.107536	.106060
Wholesale liquor dealers	.036469	.036924	.038453	.038018
For stock on hand				
Gaugers' fees in excess of $250 per month				
Stamps:				
Special bonded warehouse		.000265	.000198	.000233
Special bonded warehouse (rewarehousing)				
For imported spirits				.000229
Interest on tax upon spirits		.000282	.065748	.127689
Total	48.295593	45.384202	46.147290	49.138430
Tobacco.				
Cigars and cheroots	9.075543	10.288370	10.635210	11.409577
Cigarettes	.220025	.260205	.366038	.574437
Manufacturers of cigars (special tax)	.129039	.141980	.132504	.115415
Snuff	.920790	.957458	.791913	.509658
Tobacco of all descriptions	22.734594	22.790888	21.685575	17.001871
Stamps:				
For tobacco or snuff intended for export	.006731	.006303	.006903	.005275
For cigars intended for export				.000043
Dealers:				
In leaf-tobacco not over 25,000 pounds (special tax)				
In leaf-tobacco (special tax)	.079910	.086151	.076413	.070938
Retail, in leaf-tobacco (special tax)	.001961	.004439	.002830	.001671
In manufactured tobacco (special tax)	1.340580	1.511838	1.497317	1.497328
Manufacturers of tobacco (special tax)	.007353	.009682	.009207	.007567
Peddlers of tobacco (special tax)	.027289	.029613	.027430	.023050
Collections relating to tobacco not otherwise herein provided for				
Total	34.544715	36.086027	35.231340	31.216830
Fermented liquors.				
Fermented liquors	7.625776	8.527052	9.015529	9.915205
Brewers (special tax)	.182092	.191546	.178004	.161742
Retail dealers in malt liquors (special tax)	.124208	.172456	.168336	.143792
Wholesale dealers in malt liquors (special tax)	.035296	.053370	.056551	.082949
Total	7.967372	8.944424	9.418420	10.303688
Oleomargarine.				
Oleomargarine				
Manufacturers of oleomargarine (special tax)				
Retail dealers in oleomargarine (special tax)				
Wholesale dealers in oleomargarine (special tax)				
Total				
Bank circulation.				
Bank circulation	.001839	.000903	.000293	.000190
circulation over 90 per cent. of capital			.000001	
Banks, on amount of notes of persons, etc., paid out	.002724	.000103	.011911	.022918
Total	.004563	.001006	.012205	.023108

SPECIFIC AND GENERAL SOURCES, ETC.—Continued.

Per cent., 1881.	Per cent., 1882.	Per cent., 1883.	Per cent., 1884.	Per cent., 1885.	Per cent., 1886.	Per cent., 1887.	Per cent., 1888.	Per cent., 1889.
1.127020	.744537	.777045	.841820	1.175844	1.197913	.917539	.642901	.850191
44.692396	43.294668	46.816211	58.081880	54.189394	53.348413	50.112189	51.163392	52.196875
.125811	.125419	.130753	.151202	.149376	.152819	.148607	.135383	.127313
3.183325	3.028930	3.185879	3.780313	4.128925	4.033036	3.860125	3.483603	3.282630
.308452	.298463	.314080	.369090	.369596	.357909	.350315	.315403	.299459
.001854	.000959	.000800	.001021	.001062	.000944	.000724	.000920	.000930
.005067	.003252	.002770	.002401	.002371	.002566	.002407	.001938	.002414
.018684	.006526	.005121	.013288	.035500	.008684	.002588	.001760	.004018
.000498								
.000003								
.000007								
.000023								
49.458160	47.502754	51.232659	63.240715	60.052068	59.102284	55.394494	55.745300	56.772625
11.854323	12.404265	11.639116	8.526460	8.963874	9.009877	9.568425	9.277382	8.863751
.731820	.661192	.640660	.373669	.471029	.560782	.666693	.749127	.821907
.104783	.097802	.066734	.080556	.093523	.092979	.095374	.093623	.091826
.507576	.529358	.507046	.368573	.452712	.421960	.441732	.478546	.492832
16.816464	17.018945	15.249771	11.091469	12.411734	12.689248	13.459595	12.993250	13.040315
.004984	.004364	.000586						
.000063	.000092	.000017						
.003349	.051878	.003848	.004187	.004657	.004189	.003943	.003493	.003516
.056707	.004310	.033090	.035489	.042560	.041844	.039355	.032482	.033591
.001212	.001317	.000631	.000286	.000241	.000053	.000368	.000176	.000207
1.455355	1.423950	.849974	.934800	1.031744	1.033789	1.047998	1.020133	.977899
.006753	.005957	.003925	.004208	.004732	.004770	.004682	.004122	.003918
.019338	.015551	.010205	.011895	.012632	.012774	.012371	.010550	.009704
31.562227	32.218981	29.005623	21.431592	23.489438	23.872265	25.335536	24.662834	24.345486
9.749420	10.660356	11.315908	14.451196	15.786185	16.387633	17.997221	18.362302	17.751606
.143843	.133129	.127367	.154587	.163280	.159901	.157655	.140891	.136441
.119856	.106744	.107810	.149907	.143513	.144994	.149068	.119280	.106798
.076957	.081856	.091751	.115901	.123531	.139164	.143284	.137987	.129558
10.090076	10.982085	11.642836	14.871591	16.216509	16.831692	18.447228	18.760460	18.124403
						.366825	.525516	.517442
						.026675	.013794	.009474
						.130366	.099141	.099799
						.085327	.056606	.056468
						.609193	.695057	.683183
.001389	.000138	.000051	.000006				.000161	
.001775	.002775	.000488	.000357	.022238		.003609	.003219	.004747
.003164	.002913	.000539	.000363	.022238		.003609	.003380	.004747

F.—TABLE EXHIBITING THE PERCENTAGES OF RECEIPTS FROM

ARTICLES AND OCCUPATIONS.	Per cent., 1864.	Per cent., 1865.	Per cent., 1866.	Per cent., 1867.
ARTICLES AND OCCUPATIONS NOW TAXABLE, INCLUDING PENALTIES—continued.				
Penalties, etc.				
Unassessed penalties	.158115	.154470	.099230	.096034
Penalties upon unstamped instruments				
United States share of penalties recovered by suits		.035533	.087180	.132718
Penalties received on compromises		.052742	.109859	.097794
Interest		.002425	.003098	.004203
Costs				
Fines, penalties, etc., reported by United States officers other than collectors	.007150	.001296	.067620	.217975
Total	.165265	.246466	.367587	.548724
Total percentages of receipts from articles and occupations now taxable, including penalties	37.100668	17.231956	18.382625	22.953881
PERCENTAGES OF COLLECTIONS UNDER REPEALED LAWS.				
Manufactures and products	30.921068	34.726762	40.922403	34.420586
Gross receipts	2.924943	4.660982	3.622444	2.709604
Sales	.120560	1.924053	1.287294	1.503968
Special taxes not elsewhere enumerated	4.443618	4.644975	4.549404	5.124804
Income	17.324343	15.180263	23.473953	24.824877
Legacies	.265619	.240019	.297460	.462073
Successions		.018923	.079173	.229383
Articles in Schedule A	.594881	.969568	.544574	.795989
Bank capital and deposits	.666455	1.395025	.795643	.689027
Adhesive stamps	5.032146	5.286988	4.838866	6.052456
Miscellaneous collections	.605699	14.313586	1.206161	.133381
Total percentages of collections under repealed laws	62.899332	82.768044	81.617375	77.046119
RECAPITULATION.				
Percentages of—				
Receipts from spirits	25.890098	8.872005	10.700362	12.613903
Receipts from tobacco	7.334538	5.400179	5.317027	7.432729
Receipts from fermented liquors	1.954838	1.769022	1.679136	2.277937
Receipts from oleomargarine				
Receipts from bank circulation	1.755920	.944284	.318513	.080588
Penalties, etc., collected	.165265	.246466	.367587	.548724
Collections under repealed laws	62.899332	82.768044	81.617375	77.046119
Total	100.000000	100.000000	100.000000	100.000000

SPECIFIC AND GENERAL SOURCES, ETC.—Continued.

Per cent., 1868.	Per cent., 1869.	Per cent., 1870.	Per cent., 1871.	Per cent., 1872.	Per cent., 1873.	Per cent., 1874.	Per cent., 1875.	Per
.114996	.148675	.121970	.130474	.077134	.106541	.110230	.044674	
.....	.....	.....	.....	.001223	.001766	.003132	.000415	
.441282	.315196	.194643	.173431	.137058	.125182	.111915	.097826	
.097822	.077251	.115098	.120589	.102113	.091612	.079143	.083424	
.003332	.004650	.006653	.010150	.008399	.066540	.031277	.005765	
.....	.002274	.008582	.007669	.009659	.014050	.019135	.022188	
.....	.....	.....	.....	.....	.....	.....	.....	.....
.657432	.548046	.446946	.442313	.335586	.404691	.354832	.254292	
23.342931	47.173069	50.810489	61.043886	69.758363	84.415218	89.992525	89.405377	90
32.246952	2.090338	1.628750	2.521690	3.503158	1.111080	*a*. 609294	*a*. 781446	*a*
3.284899	3.937156	3.722173	1.944685	.....	.....	.....	.....	.....
2.403962	5.128013	4.770888	2.534277	.....	.....	.....	.....	.....
6.219015	6.211546	5.949597	3.473656	.....	.....	.....	.....	.....
21.684002	21.730564	20.393390	13.306364	10.956028	4.437687	.135878	.000210	
.794217	.777832	.902948	.993039	.....	.....	.....	.....	.....
.682613	.743415	.766181	.746456	.....	.....	.....	.....	.....
.593334	.558396	.489885	.261688	.....	.....	.....	.....	.....
.961435	1.361846	1.622075	2.514708	3.505602	3.284013	3.283580	3.685826	3
7.768704	10.260421	8.931339	10.653853	12.276849	6.752002	5.978723	5.931721	5
.017046	.018404	.012285	.005698	.....	.....	.....	.195420	.....
76.657069	52.826931	49.189511	38.956114	30.241637	15.584782	10.007475	10.594623	9
9.758121	28.162594	30.019074	32.137678	37.546605	45.670974	48.170113	47.113771	48
9.797071	14.640592	16.924750	23.316876	25.602131	30.143472	32.886339	33.745000	33
3.115311	3.811487	3.411395	5.131200	6.267314	8.174360	9.064935	8.271737	8
.....	.....	.....	.....	.....	.....	.....	.....	.....
.014996	.010350	.008324	.015819	.006727	.021721	.016307	.020577	
.657432	.548046	.446946	.442313	.335586	.404691	.354832	.254292	
76.657069	52.826931	49.189511	38.956114	30.241637	15.584782	10.007475	10.594623	9
100.000000	100.000000	100.000000	100.000000	100.000000	100.000000	100.000000	100.000000	100

a See note *b*, p. 345.

F.—TABLE EXHIBITING THE PERCENTAGES OF RECEIPTS FROM

ARTICLES AND OCCUPATIONS.	Per cent., 1877.	Per cent., 1878.	Per cent., 1879.	Per cent., 1880.
ARTICLES AND OCCUPATIONS NOW TAXABLE, INCLUDING PENALTIES—continued.				
Penalties, etc.				
Unassessed penalties	.026727	.021659	.023705	.026065
Penalties upon unstamped instruments	.000187	.000489	.000280	.000269
United States' share of penalties recovered by suits	.151953	.187130	.115019	.062570
Penalties received on compromises	.135646	.070884	.072012	.179973
Interest	.026577	.016068	.008266	.004922
Costs	.011865	.015214	.026067	.035177
Fines, penalties, etc., reported by United States officers other than collectors				
Total	.352955	.311444	.245349	.308196
Total percentages of receipts from articles and occupations now taxable, including penalties	91.165198	90.728003	91.054604	90.990252
PERCENTAGES OF COLLECTIONS UNDER REPEALED LAWS.				
Manufactures and products	*a*. 200145	*a*. 386739	*a*. 262551	*a*. 183130
Gross receipts				
Sales				
Special taxes not elsewhere enumerated				
Income	.000082			
Legacies				
Successions				
Articles in Schedule A				
Bank capital and deposits	3.213827	3.142201	2.795842	2.668087
Adhesive stamps	5.420748	5.743057	5.887003	6.158531
Miscellaneous collections				
Total percentages of collections under repealed laws	8.834802	9.271997	8.945396	9.009748
RECAPITULATION.				
Percentages of—				
Receipts from spirits	48.295593	45.384202	46.147290	49.138480
Receipts from tobacco	34.544715	36.086927	35.231340	31.216830
Receipts from fermented liquors	7.967372	8.944424	9.418420	10.303688
Receipts from oleomargarine				
Receipts from bank circulation	.004563	.001006	.012205	.023108
Penalties, etc., collected	.352955	.311444	.245349	.308196
Collections under repealed laws	8.834802	9.271997	8.945396	9.009748
Total	100.000000	100.000000	100.000000	100.000000

a See note *b* on page 345.

SPECIFIC AND GENERAL SOURCES, ETC.—Continued.

Per cent., 1881.	Per cent., 1882.	Per cent., 1883.	Per cent., 1884.	Per cent., 1885.	Per cent., 1886.	Per cent., 1887.	Per cent., 1888.	Per cent., 1889.
.020636	.012856	.013403	.017045	.026720	.020707	.025911	.016612	.011110
.000341	.000248	.000197	.000156	.000072	.000210	.000093	.000207	.000059
.032702	.038028	.048470	.029268	.090897	.044040	.016800	.026972	.013211
.083029	.055657	.121312	.166993	.050467	.077566	.115307	.061181	.022943
.004186	.002118	.001806	.001078	.004870	.001628	.002280	.001345	.000529
.029292	.026046	.025480	.023229	.025052	.022160	.024908	.018795	.017071
.....	.....	.....	.....	.....	.....	.....	.....	.....
.170186	.135853	.210668	.237769	.198078	.166311	.185299	.125112	.064932
91.283813	90.842586	92.092325	90.782030	99.978331	99.972552	99.975359	99.992143	99.995356
a. 109841	a. 055447	a. 049499	a. 020019	a. 018143	a. 020701	a. 018097	a. 007838	a. 004633
.....	.....	.....	.....	.....	.....	.....	.....	.....
.....	.....	.....	.....	.....	.....	.....	.....	.....
.602225	.....	.....	.045743	.....	.....	.....	.....	.....
.....	.....	.....	.....	.....	.....	.....	.....	.....
.....	.....	.....	.....	.....	.....	.....	.....	.....
.....	.....	.....	.....	.....	.....	.....	.....	.....
2.767861	3.568599	2.582144	.001604	.002076	.....	.....	.....	.....
5.836460	5.583368	5.276032	.150604	.001450	.006747	.006544	.000019	.000011
.....	.....	.....	.....	.....	.....	.....	.....	.....
8.716187	9.157414	7.907675	.217970	.021669	.027448	.024641	.007857	.004644
49.458160	47.502754	51.232659	63.240715	60.052068	59.102284	55.394494	55.745300	56.772625
31.562227	32.218981	29.005623	21.431592	23.489438	23.872265	25.335536	24.662834	24.345466
10.090076	10.982085	11.642836	14.871591	16.216509	16.831692	18.447228	18.760460	18.124403
.....	.....	.....	.....	.....	.....	.609193	.695057	.683183
.003164	.002913	.000539	.000363	.022238	.....	.003609	.003380	.004747
.170186	.135853	.210668	.237769	.198078	.166311	.185299	.125112	.064932
8.716187	9.157414	7.907675	.217970	.021669	.027448	.024641	.007857	.004644
100.000000	100.000000	100.000000	100.000000	100.000000	100.000000	100.000000	100.000000	100.000000

a See note b on page 345.

F.—TABLE EXHIBITING THE PERCENTAGES OF RECEIPTS FROM

ARTICLES AND OCCUPATIONS.	Per cent., 1877.	Per cent., 1878.	Per cent., 1879.	Per cent., 1880.
ARTICLES AND OCCUPATIONS NOW TAXABLE, INCLUDING PENALTIES—continued.				
Penalties, etc.				
Unassessed penalties	.026727	.021659	.023705	.026085
Penalties upon unstamped instruments	.000187	.000489	.000280	.000269
United States' share of penalties recovered by suits	.151953	.187130	.115019	.062070
Penalties received on compromises	.135646	.070884	.072012	.179973
Interest	.026577	.016068	.008266	.004022
Costs	.011865	.015214	.026067	.035177
Fines, penalties, etc., reported by United States officers other than collectors				
Total	.352955	.311444	.245349	.308196
Total percentages of receipts from articles and occupations now taxable, including penalties	91.165198	90.728003	91.054604	90.990252
PERCENTAGES OF COLLECTIONS UNDER REPEALED LAWS.				
Manufactures and products	*a*. 200145	*a*. 386739	*a*. 262551	*a*. 183130
Gross receipts				
Sales				
Special taxes not elsewhere enumerated				
Income	.000082			
Legacies				
Successions				
Articles in Schedule A				
Bank capital and deposits	3.213827	3.142201	2.795842	2.668087
Adhesive stamps	5.420748	5.743057	5.887003	6.158581
Miscellaneous collections				
Total percentages of collections under repealed laws	8.834802	9.271997	8.945396	9.009748
RECAPITULATION.				
Percentages of—				
Receipts from spirits	48.295593	45.384202	46.147290	49.138430
Receipts from tobacco	34.544715	36.086927	35.231340	31.216830
Receipts from fermented liquors	7.967372	8.944424	9.418420	10.303688
Receipts from oleomargarine				
Receipts from bank circulation	.004563	.001006	.012205	.023108
Penalties, etc., collected	.352955	.311444	.245349	.308196
Collections under repealed laws	8.834802	9.271997	8.945396	9.009748
Total	100.000000	100.000000	100.000000	100.000000

a See note *b* on page 345.

SPECIFIC AND GENERAL SOURCES, ETC.—Continued.

Per cent., 1881.	Per cent., 1882.	Per cent., 1883.	Per cent., 1884.	Per cent., 1885.	Per cent., 1886.	Per cent., 1887.	Per cent., 1888.	Per cent., 1889.
.020636	.012856	.013403	.017045	.026720	.020707	.025911	.016612	.011119
.000341	.000248	.000197	.000156	.000072	.000210	.000093	.000207	.000059
.032702	.038028	.048470	.029268	.090897	.044040	.016800	.026972	.013211
.083029	.055657	.121312	.166993	.050467	.077566	.115307	.061181	.022943
.004186	.002118	.001806	.001078	.004870	.001628	.002280	.001345	.000529
.029293	.026046	.025480	.023229	.025052	.022160	.024908	.018705	.017071
.....	.....	.....	.....	.....	.....	.....	.....	.....
.170186	.135853	.210668	.237769	.198078	.166311	.185299	.125112	.064932
91.283813	90.842586	92.692325	99.782030	99.978331	99.972552	99.975359	99.992143	99.995356
a. 109841	a. 055447	a. 049499	a. 020019	a. 018143	a. 020701	a. 018097	a. 007838	a. 004633
.....	.....	.....	.....	.....	.....	.....	.....	.....
.....	.....	.....	.....	.....	.....	.....	.....	.....
.002225	.....	.....	.045743	.....	.....	.....	.....	.....
.....	.....	.....	.....	.....	.....	.....	.....	.....
.....	.....	.....	.....	.....	.....	.....	.....	.....
.....	.....	.....	.....	.....	.....	.....	.....	.....
2.767661	3.568599	2.582144	.001604	.002076	.....	.....	.....	.....
5.836460	5.583368	5.276032	.150604	.001450	.006747	.006544	.000019	.000011
.....	.....	.....	.....	.....	.....	.....	.....	.....
8.716187	9.157414	7.907675	.217970	.021669	.027448	.024641	.007857	.004644
49.458160	47.502754	51.232659	63.240715	60.052068	59.102284	55.394494	55.745300	56.772625
31.562227	32.218981	29.005623	21.431592	23.489438	23.872265	25.335536	24.662834	24.345466
10.090076	10.983085	11.642836	14.871591	16.216509	16.831692	18.447228	18.760460	18.124403
.....	.....	.....	.....	.....	.....	.609193	.695057	.683183
.003164	.002013	.000539	.000363	.022238	.....	.003609	.003380	.004747
.170186	.135853	.210668	.237769	.198078	.166311	.185299	.125112	.064932
8.716187	9.157414	7.907675	.217970	.021669	.027448	.024641	.007857	.004644
100.000000	100.000000	100.000000	100.000000	100.000000	100.000000	100.000000	100.000000	100.000000

a See note *b* on page 345.

RETURNS OF MANUFACTURED TOBACCO UNDER EACH ACT OF LEGISLATION.

G.—STATEMENT SHOWING THE AMOUNT OF INTERNAL REVENUE DERIVED FROM EACH KIND OF MANUFACTURED TOBACCO, INCLUDING SNUFF, AT EACH RATE OF TAX UNDER THE SEVERAL ENACTMENTS, THE QUANTITIES OF THE SAME ON WHICH TAX WAS PAID, THE DATE WHEN EACH RATE OF TAX WAS IMPOSED AND REPEALED, AND THE LENGTH OF TIME THE SEVERAL RATES WERE IN FORCE, FROM JULY 1, 1862, TO JUNE 30, 1889.

Description of tobacco.	Rates of tax per pound.	Dates of acts—		Length of time rates were in force.	Aggregate collections.	Aggregate quantities (in pounds).	Remarks.
		Imposing tax.	Repealing tax.				
Smoking, made exclusively of stems	2 cents.	July 1, 1862	Mar. 3, 1863	6 months..	$58,430.09	2,921,505	The act of July 1, 1862, went into operation September 1, 1862. So far as the other acts referred to in this table relate to the tax on manufactured tobacco and snuff, they went into operation immediately on their passage, except the following:
Smoking, made exclusively of stems	5 cents.	Mar. 3, 1863	June 30, 1864	16 months..	85,158.90	1,703,177	
Smoking, prepared with all the stems in	5 cents.	July 1, 1862	June 30, 1864	22 months..	1,695,128.41	33,902,568	
Cavendish, plug, twist, fine-cut, valued at not over 30 cents per pound	10 cents.	July 1, 1862	Mar. 3, 1863	6 months..	81,005.44	810,054	
Cavendish, plug, twist, fine-cut, valued at over 30 cents per pound	15 cents.	July 1, 1862	Mar. 3, 1863	6 months..	1,297,900.83	8,652,673	
Cavendish, plug, twist, fine-cut, and manufactured tobacco of all descriptions, except smoking tobacco	15 cents.	Mar. 3, 1863	June 30, 1864	16 months..	8,251,536.81	55,010,245	
Snuff	20 cents.	July 1, 1862	June 30, 1864	22 months..	375,739.68	1,878,698	
Smoking, made exclusively of stems	15 cents.	June 30, 1864	July 13, 1866	25 months..	1,403,171.69	9,354,477	
Smoking, prepared with all the stems in, and fine-cut shorts	25 cents.	June 30, 1864	Mar. 3, 1865	9 months..	1,619,332.16	6,077,328	
Cavendish, plug, twist, etc., and fine-cut chewing	35 cents	June 30, 1864	Mar. 3, 1865	9 months..	4,407,940.92	12,594,116	
Snuff	35 cents.	June 30, 1864	Mar. 3, 1865	9 months..	122,008.44	348,595	
Twisted by hand	30 cents	Mar. 3, 1865	July 13, 1866	16 months..	14,055.22	46,850	
Smoking, of all kinds not otherwise provided for	35 cents.	Mar. 3, 1865	July 13, 1866	16 months..	964,637.18	2,756,106	
Cavendish, plug, twist, etc., and fine-cut chewing	40 cents.	Mar. 3, 1865	July 13, 1866	16 months..	10,244,302.08	25,610,755	
Snuff	40 cents.	Mar. 3, 1865	July 20, 1868	40 months..	2,302,850.95	5,757,126	
Smoking, not sweetened, stemmed, or butted	15 cents.	July 13, 1866	July 20, 1868	24 months..	3,509,109.31	23,394,062	
Twisted by hand, etc., and fine-cut shorts	30 cents.	July 13, 1866	July 20, 1868	24 months..	520,451.69	1,734,839	
Smoking, sweetened, stemmed, or butted	40 cents.	July 13, 1866	July 20, 1868	24 months..	1,432,690.26	3,581,726	
Chewing	40 cents.	July 13, 1866	July 20, 1868	24 months..	24,730,334.08	61,825,835	
Chewing, etc., smoking, etc., part of the stems removed	32 cents.	July 20, 1868	June 6, 1872	47 months..	71,496,377.90	223,426,181	
Smoking, exclusively of stems, etc	16 cents.	July 20, 1868	June 6, 1872	47 months..	18,581,687.27	116,135,545	
Snuff	32 cents.	July 20, 1868	Mar. 1, 1879	129 months..	8,940,719.33	27,939,746	
All kinds, except snuff, cigars, cheroots, and cigarettes	20 cents.	June 6, 1872	Mar. 3, 1875	32 months..	61,776,790.09	308,883,949	
All kinds, except snuff, cigars, cheroots, and cigarettes	24 cents	Mar. 3, 1875	Mar. 1, 1879	50 months..	101,509,974.77	422,958,229	
All kinds, except cigars, cheroots, and cigarettes	16 cents.	Mar. 1, 1879	Mar. 3, 1883	48 months..	96,557,414.98	603,483,843	
All kinds, except cigars, cheroots, and cigarettes	8 cents.	Mar. 3, 1883	.....	74 months..	99,100,905.96	1,238,761,324	
Total	.....	.....	.....	.....	520,979,654.44	3,199,549,552	

Dates of acts.	*Dates when they took effect.*
Mar. 3, 1865.	Apr. 1, 1865.
July 13, 1866.	Aug. 1, 1866.
June 6, 1872.	July 1, 1872.
Mar. 1, 1879.	May 1, 1879.
Mar. 3, 1883.	May 1, 1883.

RETURNS OF MANUFACTURED TOBACCO BY FISCAL YEARS.

G.—STATEMENT SHOWING THE TOTAL INTERNAL REVENUE RECEIPTS FROM SNUFF, CHEWING AND SMOKING TOBACCO, AT THE SEVERAL DIFFERENT RATES OF TAX, TOGETHER WITH THE QUANTITIES OF THE SAME ON WHICH TAX WAS PAID, AND THE AVERAGE RATE OF TAX PER POUND ON THE AGGREGATE QUANTITIES TAXED EACH YEAR, BY FISCAL YEARS, FROM SEPTEMBER 1, 1862, TO JUNE 30, 1889.

Fiscal year ended June 30—	Rates of tax at which collections were made.	Aggregate collections at each rate.	Aggregate quantities at each rate.	Aggregate collections for each fiscal year.	Aggregate quantities for each fiscal year.	Average rate of tax for each fiscal year.
	Cents.		*Pounds.*		*Pounds.*	
1863	2	$58,430.09	2,921,505	$2,613,438.61	23,852,387	$0.10 $\frac{84}{100}$
	5	276,368.85	5,527,377			
	10	81,005.44	810,054			
	15	2,163,168.05	14,421,120			
	20	34,466.18	172,331			
1864	5	1,209,589.63	24,191,792	7,327,618.98	64,577,097	.11 $\frac{46}{100}$
	15	5,877,095.11	39,180,634			
	20	240,934.24	1,204,671			
1865	5	294,328.83	5,886,576	8,300,372.55	37,641,822	.22 $\frac{1}{100}$
	15	2,018,805.41	13,458,702			
	20	100,339.26	501,697			
	25	1,088,146.66	4,352,586			
	30	7,802.77	26,009			
	35	4,028,865.16	11,511,042			
	40	762,084.46	1,905,210			
1866	15	893,540.76	5,956,938	13,038,095.73	37,493,785	.34 $\frac{77}{100}$
	25	431,185.50	1,724,742			
	30	6,252.45	20,841			
	35	1,465,721.38	4,187,775			
	40	10,241,395.04	25,603,489			
1867	15	1,758,906.94	11,726,046	16,043,842.50	47,631,494	.33 $\frac{68}{100}$
	30	231,730.38	772,435			
	40	14,053,205.18	35,133,013			
1868	15	1,750,202.37	11,668,016	15,692,415.77	46,764,150	.33 $\frac{56}{100}$
	30	288,721.31	962,404			
	40	13,653,492.09	34,133,730			
1869	10	3,206,544.83	20,040,905	17,371,063.64	64,305,026	.27 $\frac{1}{100}$
	32	14,164,518.81	44,264,121			
1870	16	4,591,702.81	28,698,143	24,300,483.42	90,288,082	.26 $\frac{91}{100}$
	32	19,708,780.61	61,589,939			
1871	10	4,882,821.83	30,517,636	25,560,539.67	95,135,504	.26 $\frac{87}{100}$
	32	20,677,717.84	64,617,868			
1872	16	5,896,206.33	36,851,290	24,570,775.59	95,209,319	.25 $\frac{81}{100}$
	32	18,674,569.26	58,358,029			
	16	4,411.47	27,572			
1873	20	22,217,127.93	111,085,640	23,397,858.22	114,789,208	.20 $\frac{38}{100}$
	32	1,176,318.82	3,675,996			
1874	20	20,900,509.67	104,502,548	21,938,955.59	107,747,691	.20 $\frac{36}{100}$
	32	1,038,445.92	3,245,143			
1875	20	18,653,043.29	93,265,216	25,200,759.51	119,435,874	.21 $\frac{10}{100}$
	24	5,480,683.19	22,836,180			
	32	1,067,033.03	3,334,478			
1876	20	4,656.47	23,282	26,755,780.20	110,380,602	.24 $\frac{24}{100}$
	24	25,689,656.09	107,040,234			
	32	1,061,467.64	3,317,086			
1877	20	1,104.01	5,520	28,148,767.90	116,146,103	.24 $\frac{24}{100}$
	24	27,051,968.37	112,716,535			
	32	1,095,695.52	3,424,048			
1878	20	93.00	465	26,383,872.30	108,824,843	.24 $\frac{24}{100}$
	24	25,320,065.08	105,500,271			
	32	1,063,714.22	3,324,107			
1879	16	6,933,652.30	43,335,327	25,606,010.25	120,398,458	.21 $\frac{27}{100}$
	20	11.40	57			
	24	17,963,510.99	74,847,963			
	32	708,835.56	2,215,111			
1880	16	21,802,775.62	136,267,347	21,804,763.74	136,275,834	.16
	20	244.32	1,221			
	24	1,743.80	7,266			
1881	16	23,521,493.16	147,009,332	23,522,470.63	147,013,405	.16
	24	977.47	4,073			
1882	16	25,811,023.06	161,318,894	25,812,392.84	161,324,601	.16
	24	1,369.78	5,707			
1883	16	18,487,001.46	115,543,759	22,872,425.35	170,361,558	.13 $\frac{43}{100}$
	8	4,385,423.89	54,817,799			
1884	16	1,147.80	7,174	13,936,258.99	174,196,064	.08
	8	13,935,111.19	174,188,890			
1885	16	321.58	2,010	14,462,353.83	180,777,413	.08
	8	14,462,032.25	180,775,403			
1886	8	15,327,379.22	191,592,240	15,327,379.22	191,592,240	.08
1887	8	16,519,961.72	206,499,521	16,519,961.72	206,499,521	.08
1888	8	16,749,008.18	209,362,602	16,749,008.18	209,362,602	.08
1889	8	17,721,989.51	221,524,869	17,721,989.51	221,524,869	.08
Total		520,979,654.44	3,199,549,552	520,979,654.44	3,199,549,552	.16 $\frac{28}{100}$

RETURNS OF CIGARS, CHEROOTS, AND CIGARETTES UNDER EACH ACT OF LEGISLATION.

G.—STATEMENT SHOWING THE AMOUNT OF INTERNAL REVENUE DERIVED FROM CIGARS, CHEROOTS, AND CIGARETTES, AT EACH RATE OF TAX UNDER THE SEVERAL ENACTMENTS, THE NUMBER OF THE SAME RETURNED FOR TAXATION (EXCLUSIVE OF CIGARETTES ON WHICH AN AD VALOREM TAX WAS PAID, THE NUMBER OF WHICH CAN NOT BE ASCERTAINED), THE DATE WHEN EACH RATE OF TAX WAS IMPOSED AND REPEALED, AND THE LENGTH OF TIME THE SEVERAL RATES WERE IN FORCE, FROM JULY 1, 1862, TO JUNE 30, 1889.

Description.	Rates of tax.	Dates of acts— Imposing tax.	Dates of acts— Repealing tax.	Length of time rates were in force.	Aggregate collections.	Aggregate number.
Cigars valued at not over $5 per M	$1.50 per M	*July 1, 1862	June 30, 1864	22 months	$116,494.05	77,662,699
Valued at over $5 and not over $10 per M	$2 per M	July 1, 1862	June 30, 1864	22 months	357,424.05	178,712,025
Valued at over $10 and not over $20 per M	$2.50 per M	July 1, 1862	June 30, 1864	22 months	667,084.83	266,833,932
Valued at over $20 per M	$3.50 per M	July 1, 1862	June 30, 1864	22 months	591,011.15	168,860,328
Cigars of all descriptions †	Average $2.37½ per M	July 1, 1862	June 30, 1864	22 months	380,722.47	160,304,197
Cheroots valued at not over $5 per M	$3 per M	June 30, 1864	‡Mar. 3, 1865	9 months	50,317.26	16,772,420
Cigars valued at not over $5 per M	$3 per M	June 30, 1864	Mar. 3, 1865	9 months	1,038,461.09	346,156,696
Valued at over $5 and not over $15 per M	$8 per M	June 30, 1864	Mar. 3, 1865	9 months	1,108,743.78	138,592,972
Valued at over $15 and not over $30 per M	$15 per M	June 30, 1864	Mar. 3, 1865	9 months	386,978.42	25,798,561
Valued at over $30 and not over $45 per M	$25 per M	June 30, 1864	Mar. 3, 1865	9 months	73,442.52	2,937,700
Valued at over $45 per M	$40 per M	June 30, 1864	Mar. 3, 1865	9 months	9,462.12	236,553
Cigarettes valued at not over $6 per 100 packages of 25 each	$1 per 100 packages	June 30, 1864	Mar. 3, 1865	9 months	5,328.77	13,321,925
Valued at over $6 per 100 packages of 25 each	$3 per 100 packages	June 30, 1864	Mar. 3, 1865	9 months	6,297.68	5,248,066
Cigarettes made wholly of tobacco	$3 per M	June 30, 1864	Mar. 3, 1865	9 months	1,790.07	596,690
Cigars and cheroots made wholly of tobacco or of any substitutes therefor	$10 per M	Mar. 3, 1865	§July 13, 1866	16 months	3,498,787.84	349,878,784
Cigarettes valued at not over $5 per 100 packages of 25 each	5 cents per package	Mar. 3, 1865	July 13, 1866	16 months	1,516.99	758,495
Valued at over $5 per 100 packages of 25 each	5 per cent.	Mar. 3, 1865	July 13, 1866	16 months	1,056.37	Unknown.
Cigarettes made wholly of tobacco or of any substitutes therefor	$10 per M	Mar. 3, 1865	July 13, 1866	16 months	752.99	75,299
Cigars, cigarettes, or cheroots, valued at $8 per M or less	$2 per M	July 13, 1866	Mar. 2, 1867	7 months	211,416.22	105,708,110
Valued at over $8 and not over $12 per M	$4 per M	July 13, 1866	Mar. 2, 1867	7 months	454,082.13	113,520,532
Valued at over $12 per M	$4 and 20 per cent. per M.	July 13, 1866	Mar. 2, 1867	7 months	2,575,490.40	180,378,686
Cigars, cigarettes, and cheroots, of all descriptions	$5 per M	Mar. 2, 1867	July 20, 1868	17 months	3,372,670.90	674,534,180
Cigars and cheroots of all descriptions	$5 per M	July 20, 1868	Mar. 3, 1875	79 months	50,066,756.38	10,013,351,276
Cigarettes weighing not over 3 pounds per M	$1.50 per M	July 20, 1868	Mar. 3, 1875	79 months	206,642.64	137,761,759
Weighing over 3 pounds per M	$5 per M	July 20, 1868	Mar. 3, 1875	79 months	3,070.63	614,126
Cigars and cheroots of all descriptions	$6 per M	Mar. 3, 1875	¶Mar. 3, 1883	98 months	111,314,138.54	18,552,356,425
Cigarettes weighing not over 3 pounds per M	$1.75 per M	Mar. 3, 1875	Mar. 3, 1883	98 months	4,657,410.36	2,661,377,349
Weighing over 3 pounds per M	$6 per M	Mar. 3, 1875	Mar. 3, 1883	98 months	5,071.50	845,250
Cigars and cheroots of all descriptions	$3 per M	Mar. 3, 1883		74 months	67,947,415.01	22,649,138,669
Cigarettes weighing not over 3 pounds per M	50 cents per M	Mar. 3, 1883		74 months	4,514,332.32	9,028,664,640
Weighing over 3 pounds per M	$3 per M	Mar. 3, 1883		74 months	810.41	270,137
Total					253,624,980.89	65,871,265,481

* The act of July 1, 1862, went into operation September 1, 1862.

† The collections opposite this heading, assessed under the act of July 1, 1862, at the several rates of $1.50, $2, $2.50, and $3.50 per M, were returned in one aggregate during the fiscal year ended June 30, 1865.

‡ The act of March 3, 1865, so far as it relates to tobacco, took effect April 1, 1865.

§ The act of July 13, 1866, so far as it relates to tobacco, took effect August 1, 1866.

¶ The act of March 3, 1883, so far as it relates to tobacco, took effect May 1, 1883.

RETURNS OF CIGARS, CHEROOTS, AND CIGARETTES BY FISCAL YEARS.

G.—STATEMENT SHOWING THE TOTAL INTERNAL REVENUE RECEIPTS FROM CIGARS, CHEROOTS, AND CIGARETTES, AT THE SEVERAL DIFFERENT RATES OF TAX, TOGETHER WITH THE NUMBER OF THE SAME ON WHICH THE TAX WAS PAID DURING EACH FISCAL YEAR, FROM SEPTEMBER 1, 1862, TO JUNE 30, 1889.

Fiscal year ended June 30—	Articles.	Rates of tax at which collections were made.	Aggregate collections at each rate.	Aggregate number at each rate.	Aggregate collections for each fiscal year.	Aggregate number for each fiscal year.
1863	Cigars	$1.50 per M	$52,210.01	34,806,673	$476,589.29	199,288,284
	....do	2.00 per M	101,211.05	50,605,525		
	....do	2.50 per M	188,495.18	75,398,072		
	....do	3.50 per M	134,673.05	38,478,014		
1864	....do	1.50 per M	64,284.04	42,856,026	1,255,424.79	492,780,700
	....do	2.00 per M	256,213.00	128,106,500		
	....do	2.50 per M	478,589.65	191,435,860		
	....do	3.50 per M	456,338.10	130,382,314		
1865	....do	3.00 per M	1,088,778.35	362,926,116	3,087,421.51	713,001,099
	....do	8.00 per M	1,106,743.78	138,592,972		
	....do	10.00 per M	24,348.90	2,434,890		
	....do	15.00 per M	386,978.42	25,798,561		
	....do	25.00 per M	73,442.52	2,937,700		
	....do	40.00 per M	9,462.12	236,553		
	....do		*380,722.47	160,304,197		
	Cigarettes	$1 per 100 packages of 25 each.	5,328.77	13,321,925		
	....do	$3 per 100 packages of 25 each.	6,297.68	5,248,066		
	....do	$3 per M	1,790.07	596,690		
	....do	5 cents per package of 25 each.	1,166.27	583,135		
	....do	5 per cent	159.22			
	....do	$10 per M	202.94	20,294		
1866	Cigars	$10 per M	3,474,438.94	347,443,894	3,476,236.86	347,674,259
	Cigarettes	5 cents per package of 25 each.	350.72	175,360		
	....do	5 per cent	897.15			
	....do	$10 per M	550.05	55,005		
1867	Cigars and cigarettes	$2.00 per M	211,416.22	105,708,110	3,661,984.39	483,806,456
	....do	4.00 per M	454,082.13	113,520,532		
	....do	4.00 per M and 20 per cent.	2,575,490.40	84,199,128		
	....do	5.00 per M	420,995.64	180,378,686		
1868	....do	5.00 per M	2,951,675.26	590,335,052	2,951,675.26	590,335,052
1869	Cigars	5.00 per M	4,957,679.67	991,535,934	4,960,952.67	993,287,429
	Cigarettes	1.50 per M	2,350.49	1,566,993		
	....do	5.00 per M	922.51	184,502		
1870	Cigars	5.00 per M	5,697,353.87	1,139,470,774	5,718,780.04	1,153,352,191
	Cigarettes	1.50 per M	20,963.25	13,708,833		
	....do	5.00 per M	862.92	172,584		
1871	Cigars	5.00 per M	6,569,568.02	1,313,913,604	6,598,173.24	1,332,844,357
	Cigarettes	1.50 per M	28,306.52	18,871,013		
	....do	5.00 per M	298.70	59,740		
1872	Cigars	5.00 per M	7,535,074.61	1,507,014,922	7,566,156.86	1,527,705,972
	Cigarettes	1.50 per M	31,017.00	20,678,000		
	....do	5.00 per M	65.25	13,050		
1873	Cigars	5.00 per M	8,899,732.98	1,779,946,596	8,940,391.48	1,807,034,646
	Cigarettes	1.50 per M	40,620.75	27,080,500		
	....do	5.00 per M	37.75	7,550		
1874	Cigars	5.00 per M	9,289,896.49	1,857,979,298	9,333,592.24	1,886,697,498
	Cigarettes	1.50 per M	42,812.25	28,541,500		
	....do	5.00 per M	883.50	176,700		

* These collections, assessed under act of July 1, 1862, at the several different rates of $1.50, $2, $2.50, and $3.50 per thousand, were returned in one aggregate, the average rate of tax being $2.37½.

RETURNS OF CIGARS, CHEROOTS, AND CIGARETTES, ETC.—Continued.

G.—STATEMENT SHOWING THE TOTAL INTERNAL REVENUE RECEIPTS FROM CIGARS, CHEROOTS, AND CIGARETTES, ETC.—Continued.

Fiscal year ended June 30—	Articles.	Rates of tax at which collections were made.	Aggregate collections at each rate.	Aggregate number at each rate.	Aggregate collections for each fiscal year.	Aggregate number for each fiscal year.
1875	Cigars	$5.00 per M	$7,097,932.84	1,419,586,568	$10,205,827.53	1,967,959,063
	....do	6.00 per M	3,042,451.27	507,075,212		
	Cigarettes	1.50 per M	40,967.25	27,311,500		
	....do	1.75 per M	24,476.17	13,986,383		
	....do	5.00 per M				
	....do	6.00 per M				
1876	Cigars	5.00 per M	15,285.47	3,057,094	11,105,272.45	1,906,227,962
	....do	6.00 per M	10,954,501.81	1,825,750,302		
	Cigarettes	1.50 per M	5.13	3,420		
	....do	1.75 per M	135,480.04	77,417,166		
1877	Cigars	5.00 per M	2,981.68	596,336	11,061,278.15	1,949,678,513
	....do	6.00 per M	10,796,477.52	1,799,412,920		
	Cigarettes	1.75 per M	260,480.95	148,846,257		
	....do	6.00 per M	1,338.00	223,000		
1878	Cigars	5.00 per M	1,189.28	237,856	11,719,226.39	2,070,253,337
	....do	6.00 per M	11,428,955.32	1,904,825,887		
	Cigarettes	1.75 per M	289,081.79	165,189,594		
	....do	6.00 per M				
1879	Cigars	5.00 per M	61.47	12,294	12,532,452.72	2,257,523,581
	....do	6.00 per M	12,115,406.82	2,019,234,470		
	Cigarettes	1.75 per M	416,984.43	238,276,817		
	....do	6.00 per M				
1880	Cigars	6.00 per M	14,206,819.49	2,367,803,248	14,922,088.88	2,776,511,614
	Cigarettes	1.75 per M	715,227.39	408,701,366		
	....do	6.00 per M	42.00	7,000		
1881	Cigars	6.00 per M	16,095,724.78	2,682,620,797	17,088,706.00	3,250,016,780
	Cigarettes	1.75 per M	992,927.22	567,386,983		
	....do	6.00 per M	54.00	9,000		
1882	Cigars	6.00 per M	18,245,852.37	3,040,975,395	19,218,422.47	3,595,519,581
	Cigarettes	1.75 per M	969,580.30	554,045,886		
	....do	6.00 per M	2,989.80	498,300		
1883	Cigars	6.00 per M	14,423,096.35	2,403,849,392	17,825,189.88	3,367,910,645
	....do	3.00 per M	2,472,118.80	824,039,600		
	Cigarettes	1.75 per M	853,079.05	487,473,743		
	....do	.50 per M	76,214.38	152,428,760		
	....do	6.00 per M	647.70	107,950		
	....do	3.00 per M	33.60	11,200		
1884	Cigars	6.00 per M	3,896.44	649,407	10,823,214.28	4,363,709,740
	....do	3.00 per M	10,364,908.83	3,454,969,610		
	Cigarettes	1.75 per M	43	246		
	....do	.50 per M	453,972.57	907,945,140		
	....do	3.00 per M	436.01	145,337		
1885	Cigars	6.00 per M	739.20	123,200	10,606,823.38	4,417,721,871
	....do	3.00 per M	10,076,548.30	3,358,849,433		
	Cigarettes	1.75 per M	92.59	52,908		
	....do	.50 per M	529,329.14	1,058,658,280		
	....do	3.00 per M	114.15	38,050		
1886	Cigars	6.00 per M	217.17	36,195	11,188,373.60	4,821,859,838
	....do	3.00 per M	10,532,586.88	3,510,862,293		
	Cigarettes	.50 per M	655,462.90	1,310,925,800		
	....do	3.00 per M	106.65	35,550		
1887	Cigars	3.00 per M	11,364,916.33	3,788,305,443	12,157,195.93	5,372,810,643
	Cigarettes	.50 per M	792,247.20	1,584,494,400		
	....do	3.00 per M	32.40	10,800		
1888	Cigars	3.00 per M	11,534,179.95	3,844,726,650	12,465,549.00	5,707,452,750
	Cigarettes	.50 per M	931,363.05	1,862,726,100		
	....do	3.00 per M				
1889	Cigars	3.00 per M	11,602,156.92	3,867,385,640	12,677,987.60	6,018,901,000
	Cigarettes	.50 per M	1,075,743.08	2,151,486,100		
	....do	3.00 per M	87.60	29,200		
Total			253,624,980.89	65,871,265,481	253,624,980.89	65,871,265,481

PRODUCTION OF DISTILLED SPIRITS.

G.—Statement of the Production of Distilled Spirits in the United States, as shown by the Returns to the Office of the Commissioner of Internal Revenue from September 1, 1862, to June 30, 1889.

Fiscal year ended June 30—	Spirits warehoused.										Spirits not warehoused.	Aggregate production.
	b Grape brandy.	Bourbon whisky.	Rye whisky.	Alcohol.	Rum.	Gin.	High wines.	Pure, neutral, or cologne spirits.	Miscellaneous.	Total.	Apple, peach, and grape brandy.	
	Gallons.	*Gallons.*	*Gallons.*	*Gallons.*	*Gallons.*	*Gallons.*	*Gallons.*	*Gallons.*	*Gallons.*	*Gallons.*	*Gallons.*	*Gallons.*
1863												a16, 149, 954
1864												a85, 296, 393
1865										16, 936, 778	37, 196	16, 973, 974
1866										23, 814, 051	248, 654	24, 062, 705
1867										32, 299, 629	440, 607	32, 740, 236
1868										16, 395, 651	515, 262	16, 910, 913
1869										53, 367, 884	908, 858	54, 276, 742
1870										71, 337, 099	1, 223, 830	72, 560, 929
1871										54, 576, 446	2, 472, 011	57, 048, 457
1872										68, 275, 745	1, 089, 698	69, 365, 443
1873										68, 236, 567	2, 965, 987	71, 202, 554
1874										68, 805, 374	766, 687	69, 572, 061
1875										60, 930, 425	1, 757, 202	62, 687, 627
1876										57, 959, 647	672, 221	58, 631, 868
1877										59, 912, 268	1, 527, 141	61, 439, 409
1878	178, 544	6, 405, 520	2, 834, 119	10, 277, 725	1, 603, 376	364, 963	19, 412, 985	11, 108, 023	4, 096, 342	56, 281, 597	1, 060, 859	57, 342, 456
1879	69, 340	8, 587, 081	4, 001, 048	19, 594, 283	2, 243, 455	372, 776	18, 033, 652	13, 459, 486	5, 600, 840	71, 961, 961	926, 412	72, 888, 373
1880	129, 086	15, 414, 148	6, 341, 991	21, 631, 009	2, 439, 301	394, 668	15, 210, 389	20, 657, 975	8, 265, 789	90, 484, 356	894, 061	91, 378, 417
1881	240, 124	33, 632, 615	9, 931, 609	22, 988, 969	2, 118, 506	549, 596	14, 303, 581	23, 556, 608	10, 586, 666	117, 968, 274	1, 559, 737	119, 528, 011
1882	381, 825	29, 575, 667	9, 224, 777	15, 201, 671	1, 704, 084	569, 134	10, 962, 379	27, 871, 293	10, 744, 156	106, 234, 986	1, 048, 229	107, 283, 215
1883	223, 977	8, 662, 245	4, 784, 654	10, 718, 706	1, 801, 960	545, 768	8, 701, 951	28, 295, 253	10, 502, 771	74, 237, 285	1, 057, 225	75, 294, 510
1884	200, 732	8, 896, 832	5, 089, 958	12, 385, 229	1, 711, 158	641, 724	6, 745, 688	28, 538, 680	11, 426, 470	75, 636, 471	894, 696	76, 531, 167
1885	312, 197	12, 277, 750	5, 328, 043	13, 436, 916	2, 081, 165	639, 461	3, 235, 889	27, 104, 382	10, 811, 757	75, 227, 560	1, 177, 514	76, 405, 074
1886	329, 679	19, 318, 819	7, 842, 540	11, 247, 877	1, 799, 952	656, 607	2, 396, 248	26, 538, 581	10, 543, 756	80, 674, 059	1, 175, 201	81, 849, 260
1887	673, 610	17, 015, 034	7, 313, 640	10, 337, 035	1, 857, 223	747, 025	2, 410, 923	27, 066, 219	11, 084, 500	78, 505, 209	928, 237	79, 433, 446
1888	864, 704	7, 463, 609	5, 879, 690	11, 075, 639	1, 891, 246	872, 990	1, 016, 436	29, 475, 913	12, 603, 883	71, 144, 110	544, 078	71, 688, 188
1889	952, 358	21, 960, 784	8, 749, 768	10, 939, 185	1, 471, 054	1, 029, 968	1, 029, 495	30, 439, 854	13, 738, 962	90, 310, 868	822, 682	91, 133, 550

a The returns of spirits distilled from apples, grapes, and peaches were included in the account of spirits distilled from other materials until July 1, 1864.
b Including also apple and peach brandy in 1889.

No returns of the production of the different kinds of warehoused spirits were made prior to July 1, 1877.

There are no official data by which the annual production of spirits distilled prior to the fiscal year 1866 can be stated in figures other than those that represent the quantities on which tax was paid. There are provisions for the exportation of spirits without payment of tax both in the act of July 1, 1862, and in that of June 30, 1864. There are also provisions for the abatement of the tax on spirits lost by leakage in transportation in the act of March 3, 1863, and in that of June 30, 1864, but there are no data in this office by which the total quantity of spirits so exported and lost by leakage each year can be determined prior to the fiscal year 1867. Hence the production above given for 1863, 1864, and 1865 is the same as the tax-paid quantities for those years (see aggregate quantities taxed each year for 1863, 1864, 1865, p. 363), and represents the true production less the unknown quantities exported and lost by leakage. To get the production for 1866, the quantity returned for tax that year (14,847,943 gallons) is added to 9,214,762 gallons stock on hand at the close of the same year (see page ix, Rep. Com. Int. Rev., 1867), making 24,062,705 gallons, though some of the quantity in warehouse (stock on hand) at the close of the year may have been, and doubtless was, produced in previous years.

RETURNS OF DISTILLED SPIRITS UNDER EACH ACT OF LEGISLATION.

G.—STATEMENT SHOWING THE INTERNAL REVENUE RECEIPTS FROM DISTILLED SPIRITS AT EACH RATE OF TAX UNDER THE SEVERAL LEGISLATIVE ENACTMENTS, THE QUANTITIES OF THE SAME ON WHICH THE TAX WAS PAID, THE DATE WHEN EACH RATE OF TAX WAS IMPOSED AND REPEALED, AND THE LENGTH OF TIME THE SEVERAL RATES WERE IN FORCE FROM JULY 1, 1862, TO JUNE 30, 1889.

Description of materials.	Rate of tax per gallon.	Dates of acts—		Length of time rates were in force.	Aggregate collections.	Aggregate quantities.	Remarks.
		Imposing tax.	Repealing tax.				
						Gallons.	
Spirits distilled from whatever materials	$0.20	July 1, 1862	Mar. 7, 1864	18 months.	$15, 568, 415. 08	77, 842, 074	The act of July 1, 1862, went into operation September 1, 1862.
Spirits distilled from whatever materials	.60	Mar. 7, 1864	June 30, 1864	4 months.	19, 956, 194. 20	33, 260, 323	
Spirits distilled from whatever materials, except grapes.	1.50	June 30, 1864	Dec. 22, 1864	6 months.	7, 279, 728. 00	4, 853, 152	The act of June 30, 1864, provided that a tax of $1.50 per gallon should be levied and collected on all distilled spirits, except brandy distilled from grapes, from July 1, 1864, to February 1, 1865; on and after February 1, 1865, the tax should be $2 per gallon.
Spirits distilled from whatever materials, except grapes, to April 1, 1865, and from whatever materials, except apples, grapes, or peaches, after April 1, 1865.	2.00	Dec. 22, 1864	July 20, 1868	43 months.	75, 958, 211. 06	37, 979, 104	The act of December 22, 1864, provided that the tax of $2 per gallon should take effect January 1, 1865, instead of February 1, 1865.
Spirits distilled from grapes	.25	June 30, 1864	Mar. 3, 1865	9 months.	7, 565. 41	30, 262	So far as the other acts of legislation referred to in this table relate to the tax on spirits, they went into operation immediately on their passage, except the following:
Spirits distilled from grapes	.50	Mar. 3, 1865	July 13, 1866	17 months.	47, 721. 48	95, 442	
Spirits distilled from apples or peaches	1.50	Mar. 3, 1865	July 13, 1866	17 months.	240, 218. 28	160, 146	
Spirits distilled from apples, grapes, or peaches.	2.00	July 13, 1866	Mar. 2, 1867	6 months	855, 075. 47	427, 538	
Spirits distilled from apples or peaches	2.00	Mar. 2, 1867	July 20, 1868	17 months.	786, 995. 87	393, 499	
Spirits distilled from grapes	1.00	Mar. 2, 1867	July 20, 1868	17 months.	171, 955. 18	171, 956	
Spirits distilled from materials other than apples, grapes, or peaches.	.50	July 20, 1868	June 6, 1872	48 months.	141, 539, 995. 85	278, 099, 810	*Dates of acts.* — *Dates when they took effect.* Mar. 3, 1865. — Apr. 1, 1865. July 13, 1866. — Sept. 1, 1866. June 6, 1872. — Aug. 1, 1872.
Spirits distilled from apples, grapes, or peaches.	.50	July 20, 1868	June 6, 1872	48 months.	2, 982, 501. 52	5, 965, 004	
Spirits distilled from materials other than apples, grapes, or peaches.	.70	June 6, 1872	Mar. 3, 1875	31 months.	117, 701, 193. 17	168, 144, 561	
Spirits distilled from apples, grapes, or peaches.	.70	June 6, 1872	Mar. 3, 1875	31 months.	3, 553, 983. 12	5, 077, 046	
Spirits distilled from materials other than apples, grapes, or peaches.	.90	Mar. 3, 1875	.....	172 months.	831, 180, 462. 75	923, 533, 851	
Spirits distilled from apples, grapes, or peaches.	.90	Mar. 3, 1875	.....	172 months.	15, 405, 927. 21	17, 117, 695	
Total	.....	.....	.....	.....	1, 233, 236, 093. 65	1, 553, 151, 463	

RETURNS OF DISTILLED SPIRITS BY FISCAL YEARS.

G.—STATEMENT SHOWING THE TOTAL INTERNAL REVENUE RECEIPTS FROM SPIRITS DISTILLED FROM WHATEVER MATERIALS AT THE SEVERAL DIFFERENT RATES OF TAX, TOGETHER WITH THE QUANTITIES OF THE SAME ON WHICH THE TAX WAS PAID, AND THE AVERAGE RATE OF TAX PER GALLON ON THE AGGREGATE QUANTITIES TAXED EACH YEAR, BY FISCAL YEARS, FROM SEPTEMBER 1, 1862, TO JUNE 30, 1889.

Fiscal year ended June 30—	Rates of tax at which collections were made.	Aggregate collections at each rate.	Aggregate quantities at each rate.	Aggregate collections for each fiscal year.	Aggregate quantities for each fiscal year.	Average rate of tax per gallon.
			Gallons.		*Gallons.*	
1862	$0.20	$3,229,990.79	16,149,954	$3,229,990.79	16,149,954	$0.20
1864	.20	11,372,719.13	56,863,595	28,431,797.83	85,295,393	.33 33/100
	.60	17,059,078.70	28,431,798			
1865	.20	965,705.16	4,828,525	16,007,706.99	16,973,974	.94 31/100
	.25	7,565.41	30,262			
	.50	2,980.78	5,961			
	.60	2,897,115.50	4,828,525			
	1.50	7,281,187.14	4,854,125			
	2.00	4,853,153.00	2,426,576			
1866	.50	44,740.70	89,481	29,482,077.99	14,847,943	1.98 44/100
	1.50	238,759.14	159,173			
	2.00	29,198,578.15	14,599,289			
1867	1.00	13,069.56	13,070	29,164,409.34	14,588,740	1.99 91/100
	2.00	29,151,339.78	14,575,670			
1868	1.00	158,885.62	158,886	14,290,730.98	7,224,809	1.97 81/100
	2.00	14,131,845.36	7,065,923			
1869	.50	18,787,891.70	37,575,783	33,735,323.68	62,092,417	.54 33/100
	*.60	14,630,370.60	24,383,951			
	2.00	265,366.11	132,683			
	.....	†51,695.27	.....			
1870	.50	39,245,099.04	78,490,198	39,245,099.04	78,490,198	.50
1871	.50	31,157,314.15	62,314,628	31,157,314.15	62,314,628	.50
1872	.50	33,117,788.99	66,235,578	33,117,788.99	66,235,578	.50
1873	.50	7,516,835.35	15,033,671	43,131,064.78	65,911,141	.65 44/100
	.70	35,614,229.43	50,877,470			
1874	.70	43,807,093.70	62,581,562	43,807,093.70	62,581,562	.70
1875	.70	38,868,838.76	55,526,912	46,877,938.10	64,425,911	.72 78/100
	.90	8,009,099.34	8,898,999			
1876	.70	2,873,264.46	4,104,664	51,390,490.43	58,512,693	.88 48/100
	.90	48,517,225.97	53,908,029			
1877	.70	62,159.09	88,798	52,671,291.34	58,043,389	.89 97/100
	.90	52,609,132.25	58,454,591			
1878	.70	25,328.53	36,184	45,626,533.06	50,704,189	.89 99/100
	.90	45,601,204.53	50,668,005			
1879	.50	15,502.27	31,005	47,709,464.24	53,025,175	.89 98/100
	.70	2,767.03	3,953			
	.90	47,691,194.94	52,990,217			
1880	.70	190.84	272	55,919,119.18	62,132,415	.90
	.90	55,918,928.34	62,132,143			
1881	.70	1,251.58	1,788	62,214,127.56	69,127,206	.90
	.90	62,212,875.98	69,125,418			
1882	.70	2.17	3	64,778,756.97	71,976,398	.90
	.90	64,778,754.80	71,976,395			
1883	.90	69,085,856.73	76,762,063	69,085,856.73	76,762,063	.90
1884	.90	71,655,211.33	79,616,901	71,655,211.33	79,616,901	.90
1885	.70	.70	1	62,242,221.97	69,158,025	.90
	.90	62,242,221.27	69,158,024			
1886	.90	63,760,219.61	70,851,355	63,760,219.61	70,851,355	.90
1887	.90	60,642,351.66	67,380,391	60,642,351.66	67,380,391	.90
1888	.90	64,408,937.37	71,565,486	64,408,937.37	71,565,486	.90
1889	.90	69,447,175.84	77,163,529	69,447,175.84	77,163,529	.90
Total	.....	1,233,236,093.65	1,553,151,463	1,233,236,093.65	1,553,151,463	.79 46/100

*A part of the first proviso of section 59, act of July 20, 1868, reads as follows: "A tax of $4 on each barrel, counting 40 gallons of proof spirits to the barrel, shall be assessed and collected from the owner of any distilled spirits which may be in bonded warehouse at the date of the taking effect of this act, to be paid whenever the same shall be withdrawn from such warehouse." This proviso, in effect, makes the tax 60 cents per gallon on 24,383,951 gallons in warehouse at the time of the passage of that act.

†Section 56 of act approved July 20, 1868, provided that all distilled spirits in bonded warehouse at the time of the passage of that act not withdrawn within nine months should be forfeited to the United States. The act of April 10, 1869, extended the time of the withdrawal of such spirits to June 30, 1869, but imposed a tax of 1 cent per gallon for each month after April 20, 1869. The receipts on account of this additional tax were $51,695.27.

RETURNS OF FERMENTED LIQUORS BY FISCAL YEARS.

G.—STATEMENT SHOWING THE INTERNAL REVENUE RECEIPTS FROM FERMENTED LIQUORS AT ONE DOLLAR PER BARREL AND AT SIXTY CENTS PER BARREL, TOGETHER WITH THE QUANTITIES OF THE SAME ON WHICH TAX WAS PAID DURING EACH FISCAL YEAR, FROM SEPTEMBER 1, 1862, TO JUNE 30, 1889.

Fiscal year ended June 30—	Rates of tax at which collections were made.	Aggregate collections at each rate.	Aggregate quantities at each rate.	Aggregate collections for each fiscal year.	Aggregate quantities in barrels and their equivalents in gallons for each fiscal year.	
	Dollars.	*Dollars.*	*Barrels.*	*Dollars.*	*Barrels.*	*Gallons.*
1863	1.00	885,271.88	885,272	1,558,083.41	2,006,625	62,205,375
	.60	672,811.53	1,121,353			
1864	.60	1,376,491.12	2,294,152	2,223,719.73	3,141,381	97,382,811
	1.00	847,228.61	847,229			
1865	1.00	3,657,181.06	3,657,181	3,657,181.06	3,657,181	113,372,611
1866	1.00	5,115,140.49	5,115,140	5,115,140.49	5,115,140	158,569,340
1867	1.00	5,819,345.49	6,207,402	5,819,345.49	6,207,402	192,429,462
1868	1.00	5,685,663.70	6,146,663	5,685,663.70	6,146,663	190,546,553
1869	1.00	5,866,400.98	6,342,055	5,866,400.98	6,342,055	196,603,705
1870	1.00	6,081,520.54	6,574,617	6,081,520.54	6,574,617	203,813,127
1871	1.00	7,159,740.20	7,740,260	7,159,740.20	7,740,260	239,948,060
1872	1.00	8,009,969.72	8,659,427	8,009,969.72	8,659,427	268,442,237
1873	1.00	8,910,823.83	9,633,323	8,910,823.83	9,633,323	298,633,013
1874	1.00	8,880,829.68	9,600,897	8,880,829.68	9,600,897	297,627,807
1875	1.00	8,743,744.62	9,452,697	8,743,744.62	9,452,697	293,033,607
1876	1.00	9,159,675.95	9,902,352	9,159,675.95	9,902,352	306,972,912
1877	1.00	9,074,305.93	9,810,060	9,074,305.93	9,810,060	304,111,860
1878	1.00	9,473,360.70	10,241,471	9,473,360.70	10,241,471	317,485,601
1879	1.00	10,270,352.83	11,103,084	10,270,352.83	11,103,084	344,195,604
1880	1.00	12,346,077.26	13,347,111	12,346,077.26	13,347,111	413,760,441
1881	1.00	13,237,700.63	14,311,028	13,237,700.63	14,311,028	443,641,868
1882	1.00	15,680,678.54	16,952,085	15,680,678.54	16,952,085	525,514,635
1883	1.00	16,426,050.11	17,757,892	16,426,050.11	17,757,892	550,494,652
1884	1.00	17,573,722.88	18,998,619	17,573,722.88	18,998,619	588,957,189
1885	1.00	17,747,006.11	19,185,953	17,747,006.11	19,185,953	594,764,543
1886	1.00	19,157,612.87	20,710,933	19,157,612.87	20,710,933	642,038,923
1887	1.00	21,387,411.79	23,121,526	21,387,411.79	23,121,526	716,767,306
1888	1.00	22,829,202.90	24,680,219	22,829,202.90	24,680,219	765,086,789
1889	1.00	23,235,863.94	25,119,853	23,235,863.94	25,119,853	778,715,443
Total		295,311,185.89	319,519,854	295,311,185.89	319,519,854	9,905,115,474

NOTE.—Prior to September 1, 1866, the tax on fermented liquors was paid in currency, and the full amount of tax was returned by collectors. From and after that date the tax was paid by stamps, on which a deduction of 7½ per cent. was allowed to brewers using them.

RETURNS OF FERMENTED LIQUORS UNDER EACH ACT OF LEGISLATION.

G.—STATEMENT SHOWING THE AMOUNT OF INTERNAL REVENUE DERIVED FROM FERMENTED LIQUORS AT ONE DOLLAR PER BARREL AND AT SIXTY CENTS PER BARREL, UNDER THE ENACTMENTS IMPOSING THOSE RATES, THE QUANTITIES ON WHICH THE TAX WAS PAID, THE DATE WHEN EACH RATE WAS IMPOSED AND WHEN IT ENDED, AND THE LENGTH OF TIME EACH RATE WAS IN FORCE, FROM JULY 1, 1862, TO JUNE 30, 1889.

Articles.	Rates of tax per barrel.	Dates of acts—		Length of time rates were in force.	Aggregate collections.	Aggregate quantities.
		First imposing the tax.	Limiting tax.			
	Dollars.				*Dollars.*	*Barrels.*
Ale, beer, lager beer, porter, and other similar fermented liquors.	1.00	July 1, 1862	Mar. 3, 1863 (Limiting to	6 months.	885,271.88	885,272
Ale, beer, lager beer, porter, and other similar fermented liquors.	.60	Mar. 3, 1863	Mar. 31, 1864)	13 months.	2,049,302.65	3,415,504
Ale, beer, lager beer, porter, and other similar fermented liquors.	1.00	July 1, 1862	.....	303 months.	292,376,611.36	315,219,078
Total	.....	.....	.....	.....	295,311,185.89	319,519,854

NOTE.—The act of July 1, 1862, went into operation September 1, 1862. The act of March 3, 1863, provided that the tax on fermented liquors should be 60 cents per barrel from the date of the passage of that act to April 1, 1864. Hence the tax of 60 cents per barrel having expired by limitation April 1, 1864, the tax of $1 per barrel under act of July 1, 1862, was again revived, and this rate, under different acts, has continued in force from and including that date.

PRODUCTION OF DISTILLED SPIRITS BY

G.—TABLE SHOWING THE PRODUCTION OF DISTILLED SPIRITS IN THE SEVERAL
1, 1877, TO

	STATES AND TERRITORIES.	FISCAL YEAR ENDED JUNE 30—				
		1878.	1879.	1880.	1881.	1882.
		Gallons.	*Gallons.*	*Gallons.*	*Gallons.*	*Gallons.*
1	Alabama	18,793	19,944	11,669	15,466	4,291
2	Arizona *a*					
3	Arkansas	47,648	41,630	39,338	54,362	18,239
4	California *b*	373,002	327,112	1,148,590	2,082,622	2,407,627
5	Colorado *c*		3,998	175		
6	Connecticut *d*	180,658	201,722	79,043	248,201	123,506
7	Dakota *e*		82			
8	Delaware *f*	8,829	9,518	30,669	11,775	29,669
9	District of Columbia *g*					
10	Florida	84				
11	Georgia	151,431	122,029	138,447	200,570	172,951
12	Idaho *h*	10,154	10,178	9,274	9,479	8,791
13	Illinois	20,903,019	29,400,626	33,933,798	36,021,205	32,097,913
14	Indiana	5,752,358	7,184,384	7,945,901	9,045,558	6,384,278
15	Iowa	283,317	236,636	999,449	2,137,454	1,686,794
16	Kansas *i*	397	4,842	42,779	65,086	25,786
17	Kentucky	6,531,455	8,201,100	15,139,651	32,052,400	30,488,064
18	Louisiana *k*	193,573	27,550	11,494	3,193	105,936
19	Maine *l*					
20	Maryland *m*	764,021	977,040	1,700,089	2,448,759	1,740,415
21	Massachusetts	1,644,886	2,294,557	2,521,005	2,192,132	1,769,463
22	Michigan		42	83	9	
23	Minnesota			23,642		
24	Mississippi *n*	1,494	1,621	168	650	
25	Missouri	2,378,035	2,591,988	2,290,956	2,381,719	2,756,346
26	Montana *o*					
27	Nebraska *p*	640,184	920,136	1,214,120	1,817,091	1,226,382
28	Nevada *q*					
29	New Hampshire *r*	50,135	45,138	48,535	50,242	46,923
30	New Jersey	205,537	226,563	127,359	507,270	441,901
31	New Mexico *s*	2,611	916	1,461	1,821	1,203
32	New York	2,631,636	2,906,205	2,504,194	2,428,421	1,936,513
33	North Carolina	247,638	345,495	502,074	654,153	425,396
34	Ohio	11,070,512	12,557,153	15,318,318	17,129,333	15,746,269
35	Oregon *t*	1,407	1,355	1,565	1,294	1,747
36	Pennsylvania	1,461,133	2,114,416	3,203,343	4,745,887	5,009,431
37	Rhode Island *u*					
38	South Carolina	31,857	32,667	29,218	37,262	28,098
39	Tennessee	756,191	886,035	879,761	1,471,788	1,099,114
40	Texas	15,920	18,291	2,960	11,057	4,139
41	Utah *v*					
42	Vermont *w*	1,431	1,505	1,400	2,335	1,152
43	Virginia	290,345	218,766	318,759	282,788	345,994
44	Washington *x*					
45	West Virginia	23,016	54,723	348,673	532,149	400,499
46	Wisconsin	669,749	902,401	820,477	884,480	738,385
47	Wyoming *y*					
	Total	57,342,456	72,888,373	91,378,417	119,528,011	107,283,215

[For notes to references in this table see page 41.]

STATES AND TERRITORIES FROM 1878 TO 1889.

STATES AND TERRITORIES OF THE UNITED STATES, BY FISCAL YEARS, FROM JULY JUNE 30, 1889.

FISCAL YEAR ENDED JUNE 30—							
1883.	1884.	1885.	1886.	1887.	1888.	1889.	
Gallons.	*Gallons.*	*Gallons.*	*Gallons.*	*Gallons.*	*Gallons.*	*Gallons.*	
14,660	9,337	11,044	14,068	6,452	1,215	8,603	1
							2
41,623	60,483	50,329	42,671	41,987	51,377	71,860	3
2,274,888	1,941,963	1,361,020	660,204	1,062,314	1,305,247	1,133,911	4
			48				5
92,484	110,666	119,104	142,381	127,050	111,612	100,807	6
							7
4,688	10,330	30,380	7,687	14,473	.....	.....	8
							9
181							10
282,046	263,017	240,343	212,226	242,985	310,101	395,101	11
							12
25,931,438	26,197,297	26,494,147	25,149,981	23,784,849	30,818,358	31,498,898	13
5,154,643	6,156,018	4,103,185	4,750,540	3,679,790	4,238,935	5,608,669	14
4,285,162	3,501,529	3,993,738	2,396,007	2,036,774	706	575	15
2,859	5,107	6,730	37,613	9,133	1,090	751	16
10,051,307	10,592,473	13,601,528	20,738,278	19,488,335	8,714,081	25,288,697	17
442	.....	.....	1,058	623	964	1,463	18
							19
1,224,871	1,656,539	1,757,709	2,119,260	1,701,295	1,451,705	2,011,094	20
1,856,551	1,762,929	1,970,763	1,674,516	1,816,530	1,859,741	1,508,916	21
							22
						1,140,061	23
1,658	647	2,019	972	518	.....		24
3,210,884	3,289,313	2,912,840	3,310,277	3,439,366	3,153,896	2,459,855	25
1,017	4,886						26
1,246,447	1,469,642	2,153,357	1,607,244	2,298,260	2,897,239	2,174,137	27
							28
39,460	39,478	33,609	25,758	22,742	81,380	20,880	29
412,505	443,389	439,368	399,635	674,692	535,765	555,228	30
531	20	1,141	1,612	2,580	1,852	2,279	31
1,818,496	1,960,802	2,034,262	1,948,889	1,797,039	1,765,499	1,850,715	32
580,192	626,716	481,978	480,078	525,691	589,036	708,971	33
12,265,127	10,821,968	9,719,473	10,236,981	10,780,248	8,783,782	7,923,839	34
3,684	10,062	11,297	8,325	9,007	781	9,183	35
2,343,871	2,691,765	2,555,145	3,363,881	3,729,710	3,283,459	4,196,575	36
							37
50,077	49,410	32,162	38,979	44,266	47,227	33,987	38
1,030,818	1,317,804	873,436	809,574	805,054	857,957	1,337,007	39
7,039	9,010	10,925	16,152	5,418	9,463	4,623	40
							41
662	937	322	597	863	.....	.....	42
232,854	313,488	257,223	264,269	191,804	218,748	268,525	43
							44
185,222	301,275	228,319	419,906	256,882	130,241	278,537	45
646,173	912,867	852,178	869,593	836,687	516,731	539,803	46
							47
75,294,510	76,531,167	76,405,074	81,849,260	79,433,446	71,688,188	91,133,550	

PRODUCTION OF FERMENTED LIQUORS BY

G.—TABLE SHOWING THE PRODUCTION OF FERMENTED LIQUORS IN THE SEVERAL 1, 1877. TO

	STATES AND TERRITORIES.	FISCAL YEAR ENDED JUNE 30—				
		1878.	1879.	1880.	1881.	1882.
		Barrels.	*Barrels.*	*Barrels.*	*Barrels.*	*Barrels.*
1	Alabama	80		84		
2	Arizona *a*	1,114	1,530	1,677	3,476	4,047
3	Arkansas	113	81	21		
4	California *b*	374,453	385,707	380,458	415,709	432,670
5	Colorado *c*	22,902	34,013	55,684	70,236	87,450
6	Connecticut *d*	55,389	54,709	68,489	72,809	106,167
7	Dakota *e*	4,916	5,163	6,515	8,879	17,622
8	Delaware *f*	7,986	8,604	9,928	12,210	14,248
9	District of Columbia *g*					
10	Florida					
11	Georgia	6,152	9,430	11,790	7,486	4,880
12	Idaho *h*	1,305	1,651	2,011	2,034	3,384
13	Illinois	595,650	645,883	805,605	891,825	1,051,680
14	Indiana	184,403	198,341	260,912	287,725	331,311
15	Iowa	185,893	186,769	232,702	253,002	286,429
16	Kansas *i*	26,057	26,681	32,270	25,872	24,281
17	Kentucky	125,939	149,592	179,464	191,218	219,356
18	Louisiana *k*	41,378	49,070	57,212	53,256	55,645
19	Maine *l*	8				
20	Maryland *m*	236,870	238,230	266,943	293,548	348,076
21	Massachusetts	618,484	591,472	678,246	738,257	836,539
22	Michigan	200,655	228,610	284,152	294,882	329,377
23	Minnesota	111,378	118,989	151,920	183,094	215,113
24	Mississippi *n*					
25	Missouri	549,149	614,870	756,527	838,764	1,019,873
26	Montana *o*	4,968	5,871	7,684	9,707	13,447
27	Nebraska *p*	30,705	32,889	43,804	46,105	54,053
28	Nevada *q*	12,976	15,078	15,098	13,460	11,358
29	New Hampshire *r*	122,962	133,019	183,645	202,552	252,706
30	New Jersey	517,602	539,957	641,344	666,146	810,156
31	New Mexico *s*	916	431	296	454	1,780
32	New York	3,551,889	3,925,922	4,599,099	4,860,637	5,643,627
33	North Carolina	5	40	98	6	23
34	Ohio	981,896	1,039,389	1,245,158	1,313,256	1,576,817
35	Oregon *t*	14,084	16,591	21,691	24,843	25,710
36	Pennsylvania	1,034,600	1,097,214	1,343,207	1,407,287	1,744,602
37	Rhode Island *u*	35,146	40,006	53,504	57,780	70,704
38	South Carolina	634	360	2,699	8,408	9,909
39	Tennessee	11,111	7,419	8,311	9,206	9,484
40	Texas	10,363	8,097	4,966	2,957	3,065
41	Utah *v*	8,550	12,670	13,746	15,962	18,075
42	Vermont *w*	187	55			
43	Virginia	15,462	15,903	18,080	20,530	26,210
44	Washington *x*	8,079	8,083	9,107	12,320	14,208
45	West Virginia	23,954	24,748	33,842	38,942	48,280
46	Wisconsin	500,983	625,284	853,806	952,209	1,224,422
47	Wyoming *y*	4,570	4,663	5,316	6,039	5,321
	Total	10,241,471	11,103,084	13,347,111	14,311,028	16,952,085

[For notes to references in this table see page 41.]

STATES AND TERRITORIES FROM 1878 TO 1889.

STATES AND TERRITORIES OF THE UNITED STATES, BY FISCAL YEARS, FROM JULY JUNE 30, 1889.

FISCAL YEAR ENDED JUNE 30—							
1883.	1884.	1885.	1886.	1887.	1888.	1889.	
Barrels.	*Barrels.*	*Barrels.*	*Barrels.*	*Barrels.*	*Barrels.*	*Barrels.*	
28	.....	2,110	7,500	14,140	14,750	19,787	1
2,729	303	.....	.....	.....	.....	.....	2
.....	.....	.....	.....	.....	.....	.....	3
459,290	492,510	504,916	518,477	583,219	656,272	739,968	4
95,286	105,391	103,056	104,774	125,891	147,935	168,153	5
123,763	134,706	126,449	126,710	149,768	260,345	265,719	6
28,390	5,426	.....	.....	.....	.....	.....	7
15,914	18,494	20,044	21,835	29,640	.....	.....	8
.....	.....	.....	.....	.....	.....	.....	9
.....	.....	.....	.....	.....	.....	.....	10
11,360	11,871	10,520	11,100	2,675	4,671	15,210	11
3,873	965	.....	.....	.....	.....	.....	12
1,087,408	1,147,632	1,204,493	1,358,874	1,691,200	1,907,442	2,011,691	13
332,874	351,011	358,667	385,452	435,685	474,434	481,836	14
267,390	257,986	169,446	195,457	188,149	160,272	103,400	15
25,103	25,437	19,274	17,869	16,458	14,170	8,290	16
218,938	239,918	249,479	264,139	288,347	301,886	291,970	17
59,695	85,433	91,772	117,311	124,778	124,610	145,048	18
.....	.....	.....	70	.....	.....	.....	19
365,389	406,447	426,684	472,475	536,728	634,160	658,451	20
861,972	861,468	885,920	966,639	1,000,957	1,017,031	1,003,141	21
340,043	400,198	389,683	436,364	477,880	522,012	519,145	22
248,150	283,653	278,341	304,485	331,480	306,473	314,073	23
.....	.....	.....	.....	.....	.....	.....	24
1,050,446	1,146,329	1,144,325	1,203,243	1,420,314	1,562,528	1,669,304	25
15,142	58,152	26,537	28,061	30,164	64,211	71,652	26
56,361	94,811	108,445	133,315	163,474	168,379	174,649	27
10,001	2,572	23,941	31,237	35,979	.....	.....	28
270,628	323,449	329,115	329,130	317,685	342,636	338,944	29
852,203	905,214	953,464	1,055,757	1,213,550	1,316,052	1,364,390	30
2,591	5,667	6,198	7,857	6,253	6,056	6,264	31
5,931,303	6,266,691	6,438,625	6,942,300	7,548,350	7,978,532	8,088,390	32
36	22	12	.....	.....	.....	.....	33
1,628,267	1,721,769	1,684,818	1,773,724	1,998,269	2,195,877	2,102,789	34
26,889	45,498	46,239	54,900	67,650	82,162	110,913	35
1,838,018	1,990,807	1,983,205	2,119,773	2,372,849	2,479,343	2,367,199	36
69,110	57,560	54,890	55,230	70,160	.....	.....	37
8,881	8,954	9,353	14,714	15,585	12,540	10,017	38
5,317	6,625	9,933	21,937	32,085	38,778	47,639	39
2,046	3,334	18,645	31,841	40,658	50,945	55,233	40
22,270	3,705	.....	.....	.....	.....	.....	41
.....	.....	.....	.....	.....	.....	.....	42
27,170	28,628	31,000	36,670	37,830	49,270	46,650	43
17,699	4,838	.....	.....	.....	.....	.....	44
52,540	64,920	67,195	74,498	97,144	103,307	102,366	45
1,328,214	1,448,845	1,418,159	1,488,315	1,656,523	1,683,140	1,817,572	46
5,345	880	.....	.....	.....	.....	.....	47
17,757,892	18,998,619	19,185,953	20,710,933	23,121,526	24,680,219	25,119,853	

RECEIPTS FROM SPECIAL TAXES FOR THE

H.—STATEMENT SHOWING THE INTERNAL REVENUE RECEIPTS FROM SPECIAL TAXES APRIL

	STATES AND TERRITORIES.	Rectifiers.	Retail liquor dealers.	Wholesale liquor dealers.	Manufacturers of stills.	Stills or worms manufactured.	Manufacturers of cigars.	Dealers in leaf tobacco.	Dealers in leaf tobacco not exceeding 25,000 pounds.	Retail dealers in leaf tobacco.
1	Alabama	$400.00	$21,063.11	$2,758.34			$225.50		$1.67	
2	Arkansas		19,972.29	2,533.35			180.00			$104.17
3	California	18,170.83	319,178.49	37,658.33	$141.67	$340	2,554.50	$309.00		
4	Colorado	800.00	63,303.20	5,700.01			611.50	55.00		
5	Connecticut	2,837.50	104,092.39	8,016.69	16.67	60	2,887.75	737.00	62.51	
6	Florida		8,510.92	1,416.66			1,463.50	279.00	8.75	104.17
7	Georgia	658.34	38,788.19	3,962.20	37.50	220	126.00			
8	Illinois	14,083.35	291,718.99	23,250.03	216.68	520	7,646.50	681.00	39.17	
9	Indiana	1,250.00	150,393.27	5,545.84			2,687.00	633.75	84.80	
10	Iowa	683.33	68,947.99	3,512.50			1,708.50	36.00		
11	Kansas	150.00	31,345.59	350.00			1,168.50	10.00		
12	Kentucky	7,741.67	80,253.64	18,600.02	50.00	240	1,266.50	10,441.66	1,431.69	
13	Louisiana	3,224.99	188,025.89	14,445.83			702.50	276.00		
14	Maryland	8,708.35	152,509.96	13,266.67	29.17	40	4,226.50	902.00	127.06	
15	Massachusetts	6,425.00	131,189.92	16,983.34	87.51	260	3,241.00	551.50	10.00	
16	Michigan	1,083.33	146,686.63	4,608.33			3,751.50	185.00		
17	Minnesota	1,783.33	66,086.47	5,041.68			1,274.50	57.00		
18	Missouri	7,816.66	138,960.15	16,254.19	62.50	180	3,868.00	697.00	45.42	
19	Montana	550.00	52,342.81	4,575.00			123.00		2.92	
20	Nebraska	650.00	85,895.80	5,458.36			1,275.00	24.00		
21	New Hampshire	33.34	51,220.40	1,008.33			689.50	16.00		
22	New Jersey	2,758.34	163,019.71	6,283.33	45.84	160	4,762.50	118.00		
23	New Mexico	233.33	34,476.11	2,524.99			85.00			
24	New York	31,533.98	790,928.28	75,633.38	54.17	80	28,044.25	5,791.00	25.84	
25	North Carolina	958.34	31,028.36	2,033.34	16.67		162.00	2,617.50	122.54	
26	Ohio	15,045.85	299,836.18	29,162.49	116.66	580	6,370.50	3,121.00	502.16	
27	Oregon	558.33	48,249.91	4,162.52			236.50	120.00		
28	Pennsylvania	25,858.37	238,499.25	32,162.58	33.33	160	22,860.25	3,528.43	304.98	
29	South Carolina	83.33	20,466.68	1,133.33			72.00		6.25	
30	Tennessee	2,050.00	40,901.84	4,079.16			237.00	2,424.85	446.62	
31	Texas	2,000.00	69,847.45	5,400.00			351.25	38.00		
32	Virginia	2,075.02	54,346.87	3,483.35			871.00	4,007.67	154.21	
33	West Virginia	766.69	14,520.37	400.00			406.00	179.00	89.43	
34	Wisconsin	5,958.34	152,992.71	9,187.50	16.67	80	3,594.00	1,070.00	56.66	
	Total	161,929.94	4,120,149.82	371,191.67	925.04	2,920	111,189.50	38,905.36	3,522.70	208.34
	Total for the special-tax year 1888	162,333.35	4,214,678.30	381,492.04	1,197.93	2,310	107,707.98	43,207.03	4,923.84	218.75

SPECIAL-TAX YEAR ENDED APRIL 30, 1889.

IN THE SEVERAL STATES AND TERRITORIES FOR THE SPECIAL-TAX YEAR ENDED 30, 1889.

Dealers in manufactured tobacco.	Manufacturers of tobacco.	Peddlers of tobacco.	Brewers.	Retail dealers in malt liquors.	Wholesale dealers in malt liquors.	Manufacturers of oleomargarine.	Retail dealers in oleomargarine.	Wholesale dealers in oleomargarine.	Total.	
$21,492.01	$5.50	.....	$220.17	$746.68	$895.83	.....	$920.00	$400.00	$49,207.81	1
17,695.45	25.50	$1.20	.....	248.75	783.34	.....	756.00	960.00	43,212.05	2
43,774.40	41.50	138.00	14,525.02	5,249.15	6,772.90	.....	24.00	.....	443,877.70	3
14,033.90	.....	6.60	2,283.34	1,827.50	2,581.25	$600	164.00	200.00	92,166.80	4
25,677.79	6.00	189.85	2,483.34	3,038.38	6,441.65	4,650	15,092.00	5,740.00	182,079.52	5
7,738.74	6.00	6.90	.....	249.23	312.50	.....	452.00	160.00	20,708.39	6
27,886.23	18.00	79.40	191.67	1,161.66	1,768.74	.....	152.00	.....	75,000.63	7
81,932.50	138.50	586.20	9,995.85	12,187.61	10,473.06	4,700	31,962.00	6,960.00	497,091.44	8
42,922.40	77.50	164.48	4,225.00	3,968.40	5,610.42	600	2,822.00	1,560.00	222,044.86	9
25,482.87	12.00	41.95	3,245.83	4,396.71	2,512.50	.....	238.00	.....	120,818.18	10
32,741.91	6.00	96.55	300.00	1,919.66	1,225.82	1,200	1,436.00	.....	72,950.03	11
24,450.40	389.00	89.10	3,570.84	1,951.64	1,687.50	.....	3,084.00	1,040.00	156,287.66	12
33,929.50	252.50	414.20	991.67	3,164.18	1,585.41	.....	1,020.00	560.00	199,251.67	13
36,019.70	72.00	129.00	4,600.00	2,468.33	2,508.32	.....	414.00	.....	226,021.08	14
40,366.50	12.00	925.10	2,366.67	4,724.12	9,162.49	600	16,580.00	11,020.00	244,455.25	15
43,855.40	52.00	670.55	11,239.58	3,784.25	6,412.49	.....	13,458.00	9,560.00	245,373.06	16
22,593.50	39.00	95.20	8,562.51	2,109.99	4,520.84	.....	.....	.....	112,164.02	17
47,302.00	308.50	215.75	4,170.84	3,016.66	5,451.85	.....	6,992.00	4,434.00	239,775.52	18
9,444.90	2.00	3.60	2,929.16	1,140.00	2,197.92	.....	456.00	1,560.00	75,327.31	19
30,035.80	.....	38.40	3,329.17	1,966.66	5,882.90	.....	549.51	1,280.00	136,385.60	20
29,691.40	.....	490.60	541.67	5,534.19	2,545.85	.....	1,952.00	.....	93,723.28	21
39,343.40	48.00	776.40	3,412.51	6,506.65	9,579.19	.....	1,676.00	880.00	239,369.87	22
5,317.80	10.00	9.30	987.50	448.34	2,043.74	.....	298.00	480.00	46,864.11	23
152,353.24	552.00	2,652.60	25,904.19	32,997.09	26,158.41	.....	372.00	200.00	1,173,280.43	24
20,695.10	916.25	996.20	.....	631.09	649.99	.....	20.00	.....	60,247.98	25
78,439.10	179.50	1,185.75	13,233.35	4,734.20	12,464.59	600	11,244.00	4,780.00	483,595.33	26
12,788.00	.....	25.50	5,068.76	1,237.51	1,200.00	.....	172.00	1,220.00	75,039.03	27
115,275.10	198.50	1,738.10	22,941.70	8,552.57	11,637.52	1,800	4,282.00	1,980.00	491,812.68	28
15,821.80	23.00	13.75	233.33	133.35	320.82	.....	8.00	.....	38,315.64	29
20,942.63	257.50	129.70	308.34	404.99	1,120.84	.....	1,264.00	1,120.00	76,367.47	30
34,867.20	6.00	10.50	529.17	10,489.93	8,160.41	.....	1,552.00	2,880.00	136,131.91	31
17,480.20	841.00	105.00	150.00	733.38	1,120.84	.....	132.00	120.00	85,620.54	32
10,740.60	38.00	.....	250.00	763.32	183.33	.....	132.00	.....	28,468.74	33
33,022.04	50.00	403.40	15,541.67	4,707.50	3,770.84	.....	2,378.00	2,640.00	235,469.33	34
1,296,504.81	4,583.25	12,434.83	168,291.85	137,254.29	159,744.10	14,750	122,245.51	61,754.00	6,718,504.51	
1,197,148.06	5,129.50	13,112.03	166,322.97	163,216.01	168,515.84	15,400	111,178.54	62,736.24	5,820,827.46	

I.—ABSTRACTS OF REPORTS OF UNITED STATES DISTRICT ATTORNEYS, MARSHALS, DURING THE FISCAL YEAR

	JUDICIAL DISTRICTS.	Suits pending July 1, 1888.			Suits commenced during fiscal year.		
		Criminal.	Civil.	In rem.	Criminal.	Civil.	In rem.
		Number.	*Number.*	*Number.*	*Number.*	*Number.*	*Number.*
1	Alabama, northern	207	22		437		
2	Alabama, middle	93	5		206		
3	Alabama, southern				6		
4	Alaska						
5	Arizona				1		
6	Arkansas, eastern	19			33		
7	Arkansas, western	24	1	1	131		
8	California, northern	209	8	5	6	1	1
9	California, southern				4		2
10	Colorado	1					
11	Connecticut	8		1	8		2
12	Dakota				25		
13	Delaware				2		
14	District of Columbia	1	2				
15	Florida, northern	1			1		
16	Florida, southern	3			5		
17	Georgia, northern	280	6	6	701		
18	Georgia, southern	7			32		
19	Idaho						
20	Illinois, northern	55	2	1	30	1	1
21	Illinois, southern	21	3		108		
22	Indiana	14			9		
23	Indian Territory						
24	Iowa, northern	28			164		
25	Iowa, southern	56			121		
26	Kansas	48			13		
27	Kentucky	57	64		474	18	
28	Louisiana, eastern	2	10	1	15		
29	Louisiana, western	12			7		
30	Maine	47			116		
31	Maryland	12			15		
32	Massachusetts	4	8	6	141		
33	Michigan, eastern	28			36		
34	Michigan, western	4			13		
35	Minnesota	27	1		110		
36	Mississippi, northern	346		1	429		1
37	Mississippi, southern	3			83		
38	Missouri, eastern	7			148		
39	Missouri, western	52			170		
40	Montana						
41	Nebraska	17			14		
42	Nevada						
43	New Hampshire	3			2		
44	New Jersey	4	1		6		
45	New Mexico	7			1		
46	New York, northern	19	2		66		
47	New York, eastern	7	16	4	3		
48	New York, southern	23	25	2	7		3
49	North Carolina, eastern	10		2	38		2
50	North Carolina, western	174	14	4	232	4	3
51	Ohio, northern	13			55		
52	Ohio, southern	8	1		5		
53	Oregon	2	1		4		
54	Pennsylvania, eastern	1	18	1	8	56	4
55	Pennsylvania, western	17	5	2	6		1
56	Rhode Island	4	1		2		
57	South Carolina	45	1		191	6	
58	Tennessee, eastern	110			292		
59	Tennessee, middle	62	2	1	250		3
60	Tennessee, western	197			120		
61	Texas, eastern	35			23		
62	Texas, northern	18	1		6		
63	Texas, western	16			25		
64	Utah	1			1		
65	Vermont	12			10		
66	Virginia, eastern	10	1		1		
67	Virginia, western	120	22		162	24	
68	Washington	1			4		
69	West Virginia	289	2		477		1
70	Wisconsin, eastern	2			6		
71	Wisconsin, western	3			2		
72	Wyoming						
	Total	2,906	245	38	5,819	110	24
	Total for fiscal year 1888	3,052	333	37	6,094	226	31

AND OTHERS, OF SUITS AND PROSECUTIONS UNDER THE INTERNAL REVENUE LAWS, ENDED JUNE 30, 1889.

Suits decided in favor of United States.						Suits settled by compromise.			
Judgments and costs paid.			Judgments and costs not paid.						
Criminal.	Civil.	In rem.	Criminal.	Civil.	In rem.	Criminal.	Civil.	In rem.	
Number.	*Number.*	*Number.*	*Number.*	*Number.*	*Number.*	*Number.*	*Number.*	*Number.*	
1			174						1
			118			1			2
									3
									4
									5
4			10						6
			107	1					7
2			3	1		1			8
			1					1	9
									10
2			2			4		2	11
5			9						12
			1						13
									14
1									15
1			1						16
17	3		424	1		4		2	17
2			9						18
									19
9	1	1	5						20
24	1		60						21
3			4						22
									23
27			104			3			24
18			68						25
			14			1			26
4	3		341	27					27
1			6	1			1		28
									29
48			42			10			30
3			5						31
18		1	6						32
16			12						33
9			1			1			34
5			6						35
6			190						36
16			26						37
4			72						38
34			81						39
									40
2			10						41
									42
1									43
			3						44
									45
39			12						46
									47
1		1	1			2		1	48
2			20						49
30	7	4	89	5	3				50
13			33			6			51
1			4						52
5									53
1	1		1	51		3	5	2	54
			1						55
						1			56
2			113			8			57
3			182						58
12	1		139				1	2	59
10			92						60
1			10			10			61
1			5			1			62
1			11						63
			1						64
1			1			2			65
			5			3			66
2	12		102	13					67
2			2						68
			104						69
3			3			1		1	70
									71
									72
413	29	7	2,924	100	3	62	7	11	
750	74	3	3,123	95	.....	221	34	19	

I.—ABSTRACTS OF REPORTS OF UNITED STATES DISTRICT ATTORNEYS,

	JUDICIAL DISTRICTS.	Suits decided adversely to the United States.			Suits dismissed, abandoned, consolidated, etc.		
		Criminal.	Civil.	In rem.	Criminal.	Civil.	In rem.
		Number.	*Number.*	*Number.*	*Number.*	*Number.*	*Number.*
1	Alabama, northern	62			119	2	
2	Alabama, middle	27			65	1	
3	Alabama, southern						
4	Alaska						
5	Arizona				1		
6	Arkansas, eastern				8		
7	Arkansas, western	11			28		1
8	California, northern				2	3	2
9	California, southern						
10	Colorado						
11	Connecticut	1			4		
12	Dakota				4		
13	Delaware	1					
14	District of Columbia						
15	Florida, northern				1		
16	Florida, southern	1			1		
17	Georgia, northern	146			121		3
18	Georgia, southern	2			7		
19	Idaho						
20	Illinois, northern	1			51	1	
21	Illinois, southern	6			12	1	
22	Indiana	1			12		
23	Indian Territory						
24	Iowa, northern	12			18		
25	Iowa, southern	4			35		
26	Kansas				24		
27	Kentucky	90	1		36	5	
28	Louisiana, eastern	3			1	3	
29	Louisiana, western	7			1		
30	Maine	2			20		
31	Maryland	4			15		
32	Massachusetts	26				5	3
33	Michigan, eastern	3			7		
34	Michigan, western	1			4		
35	Minnesota	4			90		
36	Mississippi, northern	102		2	144		
37	Mississippi, southern	10			5		
38	Missouri, eastern	2			43		
39	Missouri, western	17			47		
40	Montana						
41	Nebraska	6			10		
42	Nevada						
43	New Hampshire						
44	New Jersey	1					
45	New Mexico				5		
46	New York, northern				14		
47	New York, eastern	1			4		
48	New York, southern						
49	North Carolina, eastern	5		2	8		
50	North Carolina, western	39	3		77		
51	Ohio, northern	2			10		
52	Ohio, southern	2					
53	Oregon					1	
54	Pennsylvania, eastern	1	1	1			
55	Pennsylvania, western				13	5	1
56	Rhode Island	2					
57	South Carolina	87			8		
58	Tennessee, eastern	50			45		
59	Tennessee, middle	89		1	35		
60	Tennessee, western	45			36		
61	Texas, eastern	7			13		
62	Texas, northern	5			6		
63	Texas, western	2			12		
64	Utah						
65	Vermont				4		
66	Virginia, eastern						
67	Virginia, western	39	2		18	3	
68	Washington				1		
69	West Virginia	88			145		
70	Wisconsin, eastern						
71	Wisconsin, western						
72	Wyoming						
	Total	1,011	7	6	1,445	30	9
	Total for fiscal year 1888	970	11	3	1,176	100	5

MARSHALS, AND OTHERS, OF SUITS AND PROSECUTIONS, ETC.—Continued.

Suits pending July 1, 1889.			Sentences suspended.	Amounts of judgments recovered and costs taxed.						
				Criminal.		Civil.		In rem.		
Criminal.	Civil.	In rem.	Criminal.	Fines.	Costs.	Principal.	Costs.	Principal.	Costs.	
No.	*No.*	*No.*	*No.*							
288	20	.....	45	$12,702.00	$11,233.39	.....	.....	.....	.....	1
88	4	.....	27	9,800.00	7,496.21	.....	.....	.....	.....	2
6	.....	.....	.....	.....	.....	.....	.....	.....	.....	3
.....	.....	.....	.....	.....	.....	.....	.....	.....	.....	4
.....	.....	.....	.....	.....	.....	.....	.....	.....	.....	5
30	.....	.....	.....	2,210.00	440.05	.....	.....	.....	.....	6
14	.....	.....	3	12,100.00	.....	$123.30	.....	.....	.....	7
207	5	4	2	250.00	157.88	297.46	$135.46	.....	.....	8
3	.....	1	.....	.....	.....	.....	.....	.....	.....	9
1	.....	.....	.....	.....	.....	.....	.....	.....	.....	10
3	.....	1	.....	80.00	188.00	.....	.....	$297.00	.....	11
7	.....	.....	7	125.00	.....	.....	.....	.....	.....	12
.....	.....	.....	1	.....	.....	.....	.....	.....	.....	13
1	2	.....	.....	.....	.....	.....	.....	.....	.....	14
.....	.....	.....	.....	100.00	.....	.....	.....	.....	.....	15
4	.....	.....	.....	100.00	.....	.....	.....	.....	.....	16
259	3	2	22	29,700.00	30,654.25	345.46	91.80	.....	.....	17
19	.....	.....	9	1,400.00	1,456.08	.....	.....	.....	.....	18
.....	.....	.....	.....	.....	.....	.....	.....	.....	.....	19
19	1	1	1	275.00	277.66	131.50	40.86	2,412.00	$120.40	20
18	1	.....	6	5,271.00	3,870.00	1,790.00	73.92	.....	.....	21
3	.....	.....	1	590.00	105.57	.....	.....	.....	.....	22
.....	.....	.....	.....	.....	.....	.....	.....	.....	.....	23
23	.....	.....	38	12,470.00	794.00	.....	.....	.....	.....	24
52	.....	.....	62	4,340.00	1,120.14	.....	.....	.....	.....	25
22	.....	.....	2	1,050.00	.....	.....	.....	.....	.....	26
60	46	.....	34	26,826.00	44,539.31	2,777.35	430.20	.....	.....	27
6	5	1	5	600.00	189.25	3,643.29	36.44	.....	.....	28
11	.....	.....	.....	.....	.....	.....	.....	.....	.....	29
41	.....	.....	8	4,540.00	2,802.20	.....	.....	.....	.....	30
.....	.....	.....	.....	800.00	492.00	.....	.....	.....	.....	31
101	3	2	37	480.00	672.24	.....	.....	.....	.....	32
26	.....	.....	22	239.52	897.02	.....	.....	.....	.....	33
1	.....	.....	.....	1,400.00	124.62	.....	.....	.....	.....	34
32	1	.....	.....	810.00	19.01	.....	.....	.....	.....	35
824	.....	.....	20	12,540.00	360.45	.....	.....	.....	.....	36
29	.....	.....	7	1,330.00	1,460.41	.....	.....	.....	.....	37
34	.....	.....	23	1,629.00	1,212.25	.....	.....	.....	.....	38
43	.....	.....	14	3,717.40	1,974.17	.....	.....	.....	.....	39
.....	.....	.....	.....	.....	.....	.....	.....	.....	.....	40
3	.....	.....	.....	195.00	148.48	.....	.....	.....	.....	41
.....	.....	.....	.....	.....	.....	.....	.....	.....	.....	42
4	.....	.....	.....	10.00	.....	.....	.....	.....	.....	43
6	1	.....	2	.....	150.56	.....	.....	.....	.....	44
3	.....	.....	.....	.....	.....	.....	.....	.....	.....	45
20	2	.....	1	1,660.00	.....	.....	.....	.....	.....	46
5	16	4	.....	.....	.....	.....	.....	.....	.....	47
26	25	3	2	.....	.....	.....	.....	.....	.....	48
13	.....	2	8	3,125.00	1,778.00	576.62	204.40	.....	.....	49
171	3	.....	196	22,855.85	9,245.24	1,256.30	284.66	597.73	1,958.86	50
4	.....	.....	.....	1,475.00	2,276.32	.....	.....	.....	.....	51
6	1	.....	2	100.00	.....	.....	.....	.....	.....	52
1	.....	.....	2	360.00	.....	.....	.....	.....	.....	53
3	16	2	.....	160.00	506.06	130,955.33	58.28	.....	26.00	54
9	.....	1	.....	100.00	361.66	.....	.....	.....	.....	55
3	1	1	.....	50.00	27.08	.....	.....	.....	.....	56
18	7	.....	37	8,850.00	.....	.....	.....	.....	.....	57
122	.....	.....	.....	15,900.00	11,240.00	.....	.....	.....	.....	58
37	.....	1	14	8,450.00	7,625.42	159.07	35.75	.....	.....	59
84	.....	.....	.....	4,220.00	.....	.....	.....	.....	.....	60
17	.....	.....	6	1,861.60	.....	.....	.....	.....	.....	61
6	1	.....	.....	300.00	.....	.....	.....	.....	.....	62
15	.....	.....	.....	1,200.00	.....	.....	.....	.....	.....	63
1	.....	.....	1	.....	.....	.....	.....	.....	.....	64
14	.....	.....	1	75.12	58.02	.....	.....	.....	.....	65
3	1	.....	3	600.00	.....	.....	.....	.....	.....	66
121	16	.....	14	9,800.00	.....	780.60	611.10	.....	.....	67
.....	.....	.....	.....	200.00	.....	.....	.....	.....	.....	68
369	2	.....	.....	18,035.54	14,918.25	.....	.....	.....	.....	69
1	.....	.....	.....	625.00	.....	.....	.....	.....	.....	70
5	.....	.....	.....	.....	.....	.....	.....	.....	.....	71
.....	.....	.....	.....	.....	.....	.....	.....	.....	.....	72
2,870	182	26	685	246,683.03	160,871.25	142,836.28	2,002.87	3,306.73	2,105.26	
2,906	245	38	853	238,204.34	167,738.41	148,657.70	5,652.41	1,912.49	1,129.58	

I.—ABSTRACTS OF REPORTS OF UNITED STATES DISTRICT ATTORNEYS, MARSHALS, AND OTHERS, OF SUITS AND PROSECUTIONS, ETC.—Continued.

	JUDICIAL DISTRICTS.	Amounts paid to collectors during the fiscal year.					
		Criminal.		Civil.		In rem.	
		Fines, etc.	Costs.	Principal.	Costs.	Principal.	Costs.
1	Alabama, northern	.....	$26.00	$77.19	$59.86	.....	.....
2	Alabama, middle	$100.00	75.00	72.94	67.30	.....	.....
3	Alabama, southern	.....	.....	.....	.....	.....	.....
4	Alaska	.....	.....	.....	.....	.....	.....
5	Arizona	.....	.....	.....	.....	.....	.....
6	Arkansas, eastern	210.00	167.75	.....	.....	.....	.....
7	Arkansas, western	10.00	31.00	.....	.....	.....	.....
8	California, northern	1,825.00	102.58	47.46	27.20	$2,500.00	.....
9	California, southern	.....	.....	.....	.....	2,500.00	.....
10	Colorado	.....	.....	.....	.....	.....	.....
11	Connecticut	417.50	554.20	.....	.....	350.00	$394.00
12	Dakota	70.00	.....	.....	.....	.....	.....
13	Delaware	.....	.....	.....	.....	.....	.....
14	District of Columbia	.....	.....	.....	.....	.....	.....
15	Florida, northern	.....	.....	.....	.....	.....	.....
16	Florida, southern	100.00	.....	.....	.....	.....	.....
17	Georgia, northern	1,850.00	778.80	238.16	39.61	.....	.....
18	Georgia, southern	110.00	57.64	.....	.....	.....	.....
19	Idaho	.....	.....	.....	.....	.....	.....
20	Illinois, northern	2,079.00	799.41	131.50	40.86	921.80	341.78
21	Illinois, southern	889.50	608.96	1,790.00	73.92	.....	.....
22	Indiana	143.00	138.62	.....	.....	.....	.....
23	Indian Territory	.....	.....	.....	.....	.....	.....
24	Iowa, northern	1,679.35	789.72	.....	.....	.....	.....
25	Iowa, southern	765.01	552.68	.....	.....	.....	.....
26	Kansas	.....	.....	.....	.....	.....	.....
27	Kentucky	580.00	522.09	292.08	86.69	.....	.....
28	Louisiana, eastern	35.00	15.05	1,250.00	154.14	.....	.....
29	Louisiana, western	.....	.....	.....	.....	.....	.....
30	Maine	1,355.00	438.13	.....	.....	.....	.....
31	Maryland	203.96	.....	.....	.....	.....	.....
32	Massachusetts	975.00	674.60	.....	.....	200.00	112.22
33	Michigan, eastern	2,112.00	2,584.32	.....	.....	.....	.....
34	Michigan, western	1,337.50	48.50	.....	.....	.....	.....
35	Minnesota	369.89	184.80	.....	.....	.....	.....
36	Mississippi, northern	405.00	150.01	.....	.....	.....	.....
37	Mississippi, southern	780.00	726.61	.....	.....	.....	.....
38	Missouri, eastern	125.00	.....	.....	.....	.....	.....
39	Missouri, western	944.40	1,328.26	.....	.....	.....	.....
40	Montana	.....	.....	.....	.....	.....	.....
41	Nebraska	50.00	51.05	.....	.....	.....	.....
42	Nevada	.....	.....	.....	.....	.....	.....
43	New Hampshire	.....	.....	.....	.....	.....	.....
44	New Jersey	937.00	255.40	.....	.....	.....	.....
45	New Mexico	95.00	.....	.....	.....	.....	.....
46	New York, northern	966.82	.....	.....	.....	.....	.....
47	New York, eastern	20.00	.....	.....	.....	.....	.....
48	New York, southern	2,105.46	28.80	.....	.....	4,872.70	.....
49	North Carolina, eastern	143.00	196.55	273.02	95.20	.....	.....
50	North Carolina, western	777.00	3,051.02	278.02	198.76	410.79	317.48
51	Ohio, northern	885.00	911.52	.....	.....	.....	.....
52	Ohio, southern	185.00	.....	.....	.....	.....	.....
53	Oregon	360.00	.....	.....	.....	.....	.....
54	Pennsylvania, eastern	985.00	573.37	.....	2.24	.....	.....
55	Pennsylvania, western	1,185.00	454.32	.....	.....	.....	.....
56	Rhode Island	105.00	93.01	.....	.....	.....	.....
57	South Carolina	168.50	366.97	.....	.....	.....	.....
58	Tennessee, eastern	250.00	589.76	.....	.....	.....	.....
59	Tennessee, middle	1,070.00	2,889.53	259.07	73.22	250.00	70.25
60	Tennessee, western	210.00	210.85	.....	.....	.....	.....
61	Texas, eastern	175.00	218.00	.....	.....	.....	.....
62	Texas, northern	170.00	129.31	.....	.....	.....	.....
63	Texas, western	100.00	.....	.....	.....	.....	.....
64	Utah	.....	.....	.....	.....	.....	.....
65	Vermont	37.62	160.15	.....	.....	.....	.....
66	Virginia, eastern	13.00	.....	.....	.....	.....	.....
67	Virginia, western	609.85	244.20	323.40	342.52	.....	.....
68	Washington	103.00	.....	.....	.....	.....	.....
69	West Virginia	.....	.....	.....	.....	.....	.....
70	Wisconsin, eastern	600.00	569.23	.....	.....	.....	.....
71	Wisconsin, western	400.00	412.25	.....	.....	.....	.....
72	Wyoming	.....	.....	.....	.....	.....	.....
	Total	32,177.36	22,910.02	5,032.84	1,261.52	12,005.29	2,235.78
	Total for fiscal year 1888	72,638.47	30,672.00	24,006.96	2,199.57	13,448.92	3,496.87

K.—ABSTRACT OF SEIZURES OF PROPERTY FOR VIOLATION OF INTERNAL REVENUE LAWS FOR THE FISCAL YEAR ENDED JUNE 30, 1889.

STATES AND TERRITORIES.	Distilled spirits.		Tobacco.		Cigars.		Miscellaneous property.
	Gallons.	Value.	Pounds.	Value.	Number.	Value.	Value.
Arkansas							$435.00
Alabama	782	$910.00					9,658.00
California	6,535	3,396.00			350	$10.00	62,231.00
Connecticut	1,236	1,051.00			1,900	40.00	8,216.00
Colorado							469.00
Florida							15.00
Georgia	411	390.00					11,969.00
Illinois	141	141.00	12	$2.00			3,177.00
Indiana							5.00
Iowa							100.00
Kentucky	42	52.00					2,777.00
Louisiana	407	380.00			1,100	11.00	380.00
Maryland							10.00
Massachusetts	1,180	286.00			6,280	133.00	2,935.00
Michigan	37	75.00					
Missouri	242	432.00	20	16.00	78	8.00	100.00
New Hampshire					16,730	502.00	
New York	14,175	6,951.00			18,938	210.00	5,044.00
New Jersey	400	467.00	2,069	186.00			306.00
North Carolina	7,495	2,706.00	894	90.00			14,281.00
Nebraska	46	30.00					100.00
New Mexico	26	72.00			27	2.00	
Ohio	300	300.00					
Oregon							1,000.00
Pennsylvania	2,527	1,948.00			550	12.00	4,028.00
South Carolina	451	453.00					2,813.00
Tennessee	6,923	3,882.00	40	10.00			3,074.00
Virginia	1,608	933.00					2,431.00
West Virginia							318.00
Wisconsin	200	300.00					845.00
Total	45,164	25,155.00	3,035	284.00	45,903	923.00	136,747.00
Total for fiscal year 1888	15,808	15,825.18	13,613	1,407.60	299,296	2,374.00	167,177.38

L.—STATEMENT OF COLLECTIONS, EXPENSES, AND PERCENTAGE OF COST OF COLLECTION, FOR EACH DISTRICT DURING THE FISCAL YEAR ENDED JUNE 30, 1889.

Districts.	COLLECTIONS.						EXPENSES.						
	Spirits.	Tobacco.	Beer.	Oleomargarine.	Penalties, etc.	Total Collections.	Salary of Collector.	Deputies and clerks.	Office rent, etc.	Storekeepers.	Gaugers.	Total expenses.	Per cent. of cost.
Alabama	$33,186.56	$35,839.77	$20,557.55	$2,590.00	$588.48	$92,762.36	$2,822.76	$15,891.18	$171.59	$582.00	$2,571.80	$21,539.33	23.22
Arkansas	81,854.05	32,199.51	1,602.51	4,642.00	421.15	120,719.22	3,118.52	12,188.85	236.19	14,143.50	2,031.50	31,653.56	26.22
First California	695,392.51	479,528.04	603,893.43	24.00	4,811.29	1,783,649.27	4,500.00	32,673.39	737.10	11,580.00	25,845.62	75,336.11	4.22
Fourth California	182,276.00	23,630.97	105,726.39	.....	1,736.55	313,363.91	3,509.75	18,613.40	1,680.07	7,908.00	9,736.89	41,448.11	13.23
Colorado	73,689.67	53,919.29	162,670.75	3,836.32	.....	294,116.03	3,125.00	12,000.00	1,382.68	.....	1,473.99	17,981.67	6.11
Connecticut	213,986.59	157,925.85	257,614.71	153,624.70	2,563.03	785,714.88	4,500.00	23,502.57	501.74	2,500.00	6,036.08	37,040.39	4.71
Florida	9,535.92	412,518.35	588.42	1,236.00	204.06	424,082.75	3,375.00	8,914.07	744.21	.....	.....	13,033.28	3.07
Georgia	370,709.11	44,517.59	17,253.83	104.00	3,534.61	436,119.14	4,500.00	39,509.06	934.67	42,958.00	5,128.27	93,030.00	21.33
First Illinois	6,280,666.06	870,378.06	1,575,818.28	401,089.44	6,634.12	9,134,585.96	4,500.00	43,031.59	620.05	28,256.00	44,620.86	121,028.50	1.32
Fifth Illinois	19,175,514.52	42,590.96	101,844.38	2,216.00	99.40	19,322,265.26	4,500.00	17,762.08	903.00	48,976.00	44,159.52	116,300.60	.60
Eighth Illinois	1,901,439.95	302,216.56	110,098.07	1,320.00	3,132.02	2,318,206.60	4,500.00	20,353.45	186.03	9,272.00	5,225.99	39,537.47	1.71
Thirteenth Illinois	79,186.61	42,361.41	108,834.66	838.00	1,191.29	232,361.97	3,259.74	11,461.88	217.46	2,174.00	1,670.22	18,783.30	8.08
Sixth Indiana	2,081,887.37	156,489.64	289,130.81	85,465.86	496.60	2,613,470.28	4,500.00	20,349.03	615.47	23,788.00	14,324.40	63,576.90	2.43
Seventh Indiana	2,940,469.39	62,642.59	171,260.96	340.00	53.12	3,174,766.06	4,500.00	13,246.73	779.90	9,936.00	13,990.91	42,453.54	1.34
Third Iowa	30,419.86	68,839.40	47,231.55	14.00	2,577.74	149,082.55	2,750.00	9,585.02	135.34	.....	1,142.18	16,612.54	9.13
Fourth Iowa	43,076.10	141,859.78	56,996.43	244.00	1,318.04	243,494.35	3,099.49	14,247.38	1,511.40	608.00	454.45	19,920.72	8.18
Kansas	32,134.33	91,023.47	11,132.90	48,955.60	195.92	183,432.22	2,875.00	13,908.11	244.34	.....	90.96	17,118.33	9.33
Second Kentucky	1,306,133.40	187,473.75	4,318.51	44.00	302.69	1,498,272.35	4,500.00	20,637.54	1,270.14	52,663.00	24,871.85	103,942.53	6.94
Fifth Kentucky	7,509,731.89	1,165,319.91	188,890.46	2,248.00	691.75	8,866,882.01	4,500.00	37,2[illegible]59	834.32	188,369.50	74,395.06	305,382.47	3.44
Sixth Kentucky	3,169,956.57	153,860.74	80,636.76	2,452.00	10.00	3,406,916.07	4,500.00	18,193.72	310.89	53,516.50	35,114.04	111,635.15	3.28
Seventh Kentucky	1,984,853.13	30,285.21	3,172.71	292.00	398.81	2,019,001.86	4,500.00	21,109.68	1,105.65	62,627.00	22,310.37	111,652.70	5.53
Eighth Kentucky	1,108,120.20	9,282.78	298.34	.....	2,041.15	1,119,742.47	4,500.00	16,665.47	761.45	57,066.50	13,719.08	92,712.50	8.28
Louisiana	159,521.87	325,394.16	140,415.22	3,140.00	3,538.01	632,009.26	3,875.00	27,520.48	319.49	.....	3,759.53	35,474.50	5.61
Maryland	1,983,524.45	1,382,761.44	618,968.55	1,395.80	277.94	3,986,928.18	4,500.00	46,434.22	1,304.01	40,967.50	29,968.84	123,194.57	3.09
Massachusetts	1,074,406.38	361,710.04	943,864.16	40,538.66	4,017.02	2,424,536.26	4,500.00	31,193.01	554.04	24,672.00	18,690.48	79,609.48	3.28
First Michigan	118,292.94	1,183,680.41	424,651.49	18,058.00	7,358.31	1,752,041.15	4,500.00	22,337.01	2,007.67	.....	1,285.06	30,229.76	1.73
Fourth Michigan	36,195.59	92,924.25	75,004.47	5,254.00	978.13	210,356.44	2,875.00	7,044.93	147.30	.....	476.41	10,543.64	5.01
Minnesota	926,704.88	143,306.07	307,231.20	.....	554.69	1,377,796.84	4,500.00	16,036.92	188.70	3,813.00	4,509.49	29,048.11	2.11
First Missouri	1,313,650.27	8,697,658.41	1,433,407.85	5,118.00	143.41	6,449,977.94	4,500.00	32,798.55	772.60	14,657.00	20,521.98	73,250.13	1.14
Sixth Missouri	968,980.58	173,587.96	128,098.70	7,078.00	2,885.17	1,280,630.26	4,500.00	19,460.00	651.80	14,903.00	9,292.28	48,807.08	3.81
Montana	65,334.47	18,829.37	74,125.97	4,352.00	1.00	162,642.81	3,500.00	15,813.77	1,180.51	.....	1,232.75	21,727.03	13.36
Nebraska	1,973,496.56	97,439.97	174,428.40	3,077.51	181.75	2,248,624.19	4,500.00	21,472.71	374.36	7,824.00	7,158.57	41,229.64	1.83
New Hampshire	79,667.09	61,373.24	322,569.93	1,384.00	4,357.28	469,351.54	3,838.80	12,301.93	237.36	1,380.00	805.75	18,562.93	3.90
First New Jersey	65,283.72	63,298.80	7,620.76	992.00	218.73	137,414.01	2,978.21	8,900.00	605.54	.....	1,203.45	13,687.20	9.96
Fifth New Jersey	503,494.34	2,398,307.22	1,274,258.22	5,044.00	1,100.79	4,182,204.57	4,500.00	31,238.87	499.48	3,640.00	8,741.72	48,615.07	1.16
New Mexico	42,106.20	6,818.86	9,890.69	124.00	122.92	59,062.67	2,750.00	8,201.17	911.45	.....	962.16	12,844.78	21.75
First New York	1,259,965.25	597,406.40	1,667,885.17	296.00	140.28	3,525,693.10	4,500.00	31,391.52	4,502.87	5,628.00	9,486.34	55,508.63	1.57

Second New York	266,809.28	766,097.76	557,089.56	.....	299.87	1,560,296.47	4,500.00	29,309.01	5,394.20	1,876.00	25,430.43	66,209.64	4.16
Third New York	172,138.32	2,402,444.84	3,101,232.78	372.00	1,192.38	5,677,360.27	4,500.00	42,957.60	4,285.60	.....	6,968.55	58,711.75	1.03
Fourteenth New York	262,303.66	385,250.93	1,025,965.91	.....	5,862.29	1,679,382.79	4,500.00	27,334.50	380.18	.....	4,754.20	36,968.88	2.20
Twenty-first New York	113,759.30	634,369.73	822,172.02	.....	621.85	1,070,922.90	4,500.00	21,731.85	742.23	.....	3,659.94	30,635.02	2.86
Twenty-eighth New York	729,462.68	479,019.43	894,171.22	.....	2,346.15	2,104,999.48	4,500.00	29,359.40	1,236.59	5,400.00	11,203.13	51,689.12	2.46
Fourth North Carolina	103,150.06	1,028,193.25	852.49	16.00	2,019.69	1,134,231.49	4,500.00	46,038.12	844.52	28,929.00	10,583.95	90,895.59	8.01
Fifth North Carolina	490,857.38	836,980.38	395.85	4.00	4,681.17	1,332,918.78	4,500.00	43,499.93	1,881.18	161,752.50	14,204.22	225,337.33	16.91
First Ohio	6,526,907.61	1,624,444.36	1,067,658.05	8,116.60	307.41	9,227,433.43	4,500.00	36,799.82	1,188.40	45,206.00	76,864.75	164,558.97	1.78
Tenth Ohio	109,033.00	165,667.84	332,721.91	660.00	1,451.66	609,534.41	3,892.77	14,079.92	269.26	3,926.00	2,176.20	24,344.15	3.99
Eleventh Ohio	440,836.77	209,890.63	200,525.25	5,945.10	375.61	857,573.36	4,500.00	9,719.51	623.55	10,324.00	5,100.02	30,267.08	3.53
Eighteenth Ohio	145,391.33	307,532.82	375,578.03	43,339.54	344.59	872,186.31	4,500.00	19,706.19	176.21	7,252.00	3,023.39	34,657.79	3.97
Oregon	73,136.34	39,349.94	110,695.71	2,880.00	463.00	226,524.99	3,000.00	10,812.49	1,356.80	2,150.00	1,454.01	18,773.30	8.29
First Pennsylvania	510,833.91	1,106,671.70	1,409,912.28	8,977.38	1,547.25	3,037,942.52	4,500.00	43,856.11	495.50	8,424.00	34,419.87	91,695.48	3.02
Ninth Pennsylvania	226,531.16	1,454,717.98	76,715.10	.....	112.05	1,758,076.29	4,500.00	31,075.75	1,235.98	29,245.00	2,909.58	68,966.31	3.92
Twelfth Pennsylvania	117,785.58	162,199.19	257,878.97	50.00	222.79	538,136.53	3,867.21	15,939.03	870.86	10,340.50	4,425.61	35,443.21	6.59
Twenty-third Pennsylvania	1,991,316.32	698,463.84	491,762.55	3,762.00	1,336.51	3,186,641.22	4,500.00	37,905.69	1,880.55	63,448.00	22,462.21	130,196.36	4.09
South Carolina	51,006.10	19,786.96	10,014.43	8.00	907.02	81,722.51	3,204.19	15,016.63	184.25	7,619.50	474.59	26,449.16	32.36
Second Tennessee	50,616.87	76,125.04	12,061.28	148.00	1,028.62	139,979.81	3,021.10	15,699.96	262.16	9,851.00	2,880.41	31,714.63	22.66
Fifth Tennessee	776,220.90	106,168.06	33,973.15	2,308.00	7,685.85	926,355.96	4,500.00	25,588.04	727.63	38,744.25	11,939.99	81,409.91	8.80
Third Texas	49,679.09	33,845.14	57,440.19	1,968.00	491.67	143,424.09	3,003.34	15,196.55	460.32	.....	2,934.83	21,595.04	15.06
Fourth Texas	41,587.30	25,190.86	14,700.86	2,084.00	1,130.41	84,693.43	2,736.46	10,355.68	583.60	3,829.00	512.26	18,017.00	21.27
Second Virginia	47,362.52	1,788,019.72	1,442.54	792.00	19.47	1,837,636.25	4,500.00	37,734.02	488.39	.....	6,912.06	49,634.47	2.70
Sixth Virginia	201,338.36	1,218,501.11	44,221.25	.....	1,929.51	1,465,990.23	4,500.00	45,067.20	716.05	34,118.00	31,842.31	116,243.56	7.93
West Virginia	286,711.22	398,051.44	96,591.62	276.00	33.19	781,663.47	4,500.00	18,351.29	829.82	4,592.00	5,977.36	34,250.47	4.38
First Wisconsin	584,238.60	630,589.23	1,476,558.74	2,744.00	1,169.84	2,695,300.41	4,500.00	22,536.90	329.48	9,323.00	10,193.65	46,383.03	1.74
Second Wisconsin	68,406.34	100,088.11	229,516.38	2,370.00	812.68	401,195.51	3,375.00	11,649.89	159.14	.....	405.44	15,589.47	3.89

The foregoing statement of expenses does not include the cost of paper for internal-revenue stamps, salaries, and expenses of internal-revenue agents, salaries of the officers and clerks in the office of the Commissioner of Internal Revenue and amounts expended in detecting and punishing violations of internal-revenue laws, all of which are included in the statement of the "Cost of Collection" on page 10 of this report, but which can not be apportioned among the various districts.

INDEX.

Page.

ABATEMENT CLAIMS 31

ALCOHOL:
- Decrease (136,504 gallons) from previous year in production of 80
- Decrease (195 gallons) from previous year in quantity of, transferred to manufacturing warehouses 137
- Exported during fiscal year 1887, quantity of (883,886 gallons) 129
- Exported during fiscal year 1888, quantity of (283,687 gallons) 129, 130, 148
- Exported during fiscal year 1889, quantity of (302,866 gallons) 130, 148
- Increase (19,179 gallons) over previous year in exportation of 136
- Increase (1,713 gallons) over previous year in quantity of, allowed for leakage 128
- Increase (9,694 gallons) over previous year in quantity of, withdrawn for scientific purposes and use of United States 136
- Increase (251,796 gallons) over previous year in quantity of, withdrawn from warehouse, tax-paid 124
- Lost by casualty during fiscal year 1888 ..... 139, 148
- Lost by casualty during fiscal year 1889, quantity of (8,130 gallons) 129, 148
- Lost by leakage or evaporation in warehouse during fiscal years 1888 and 1889, quantities of (3,123 and 4,836 gallons, respectively) 127, 148
- Ports from which exported during fiscal year 1888 131
- Ports from which exported during fiscal year 1889 133
- Ports to which exported during fiscal year 1888 131
- Ports to which exported during fiscal year 1889 133
- Produced during fiscal years 1888 and 1889, quantities of (11,075,639 and 10,939,135 gallons, respectively) 79, 148
- Remaining in warehouse at close of fiscal years 1887, 1888, and 1889, quantities of (352,899; 606,702, and 433,694 gallons, respectively) 77, 142, 148
- Withdrawn for scientific purposes and use of United States during fiscal years 1888 and 1889, quantities of (21,271 and 30,965 gallons, respectively) 136, 148
- Withdrawn for transfer to manufacturing warehouses during fiscal years 1888 and 1889, quantities of (25,817 and 25,622 gallons, respectively) 137, 148
- Withdrawn from warehouse, tax-paid, during fiscal years 1888 and 1889, quantities of (10,487,938 and 10,739,734 gallons, respectively) 123, 148

ALCOHOL AND OTHER SPIRITS NOT ALLOWED BY PRODUCERS TO REMAIN IN BOND:
- Effect of law which provides that certain fractions of gallons shall be dropped, on rate of tax on 129

ALCOHOL IN THE INDUSTRIAL ARTS:
- Estimated quantity of, that would be used if free of tax (about 8,000,000 gallons per annum) 138
- Provisions in sections 8 to 11 of bill (H. R. 9051, Fiftieth Congress, first session), relative to 137, 138

ALCOHOL IN THE INDUSTRIAL ARTS, H. R. 9051, FIFTIETH CONGRESS, FIRST SESSION, PROVISIONS IN, RELATING TO:
- Amendments to, suggested 138
- Estimated additional annual expense to carry into effect ($288,000) 139

ASSESSMENTS:
- Amount of, during fiscal year 1889, by States and Territories 69
- Amount of, in each class and in all classes, for fiscal years 1888 and 1889, compared 68
- Reasons for increase or decrease in the amount of, in several of the classes named, during fiscal year 1889 69
- Statements, tables, etc., prepared from reports in Division of 68

BANKS AND BANKERS, NOT NATIONAL, ETC.:
- Tax on circulation of, during last two fiscal years, compared 5
- Tax on circulation of, during first quarter of fiscal years 1889 and 1890, compared 9

BOURBON WHISKY:
- Decrease (1 gallon) from previous year in quantity of, withdrawn for scientific purposes and use of United States 136
- Erroneous charges of, to casualty and export accounts in previous years corrected (94 gallons) 148
- Exported during fiscal year 1887, quantity of (217,800 gallons) 129
- Exported during fiscal year 1888, quantity of (170,830 gallons) 129, 130, 148
- Exported during fiscal year 1889, quantity of (1,395,954 gallons) 130, 148
- Increase (1,225,124 gallons) over previous year, in exportation of 136
- Increase (14,497,175 gallons) over previous year, in production of 80
- Increase (642,974 gallons) over previous year in quantity of, allowed for leakage 128
- Increase (3,838 gallons) over previous year in quantity of, transferred to manufacturing warehouses 137
- Increase (2,447,998 gallons) over previous year in quantity of, withdrawn from warehouse, tax-paid, during the year 124
- Lost by casualty during fiscal years 1888 and 1889, quantities of (2,047 and 7,455 gallons, respectively) 139, 148

Page.

BOURBON WHISKY—Continued.
Lost by leakage or evaporation in warehouse during fiscal years 1888 and 1889, quantities of (1,280,040 and 1,923,014 gallons, respectively) 127, 148
Ports from which exported during fiscal year 1888 131
Ports from which exported during fiscal year 1889 134
Ports to which exported during fiscal year 1888 131
Ports to which exported during fiscal year 1889 134
Produced during fiscal years 1888 and 1889, quantities of (7,463,609 and 21,960,784 gallons, respectively) 79, 148
Remaining in warehouse at close of fiscal years 1887, 1888, and 1889, quantities of (40,801,717; 34,619,154, and 38,608,331 gallons, respectively) 77, 142, 148
Withdrawn for transfer to manufacturing warehouses during last two fiscal years, quantities of (2,705 and 6,543 gallons, respectively) 137, 148
Withdrawn from warehouse, tax-paid, during fiscal years 1888 and 1889, quantities of (12,190,013 and 14,638,011 gallons, respectively) 123, 148
Withdrawn for scientific purposes and use of United States during fiscal years 1888 and 1889, quantities of (631 and 630 gallons, respectively) 136, 148

BRANDY, FRUIT:
Deposited in special bonded warehouses during the year, quantity of (1,333,278 gallons) ... 156
Exported and accounted for during the year, quantity of (8,260 gallons) 157
In warehouse July 1, 1888, and June 30, 1889, quantities of 156, 157
Lost by casualty during the year, quantity of (5 gallons) 157
Lost by casualty and unaccounted for July 1, 1888, and June 30, 1889 ..... 156, 157
Lost by leakage or evaporation in warehouses during the year, quantity of (29,055 gallons) 157
Production of different kinds of, during the year, by collection districts 54, 55
Production of different kinds of, during the year, by States and Territories 55
Transferred from one district to another and unaccounted for July 1, 1888, and July 1, 1889..156, 157
Withdrawn for transfer to other districts 157
Withdrawn for transfer to second warehouse in same district 157
Withdrawn from distilleries in each State, during the year, for deposit in special bonded warehouses, quantities of 159
Withdrawn for export and unaccounted for July 1, 1888, and July 1, 1889, quantities of....156, 157
Withdrawn for transfer from producing districts and unaccounted for July 1, 1888..... 156
Withdrawn for transfer to manufacturing warehouses, quantity of (898 gallons) 157
Withdrawn for use of United States, quantity of (114 gallons) 157
Withdrawn, tax-paid, during the year, quantity of (495,723 gallons) 157

BREWERS:
Distribution of, among the several collection districts 35–37
Distribution of, among the States and Territories 33, 34, 38, 39

CASUALTIES TO SPIRITS IN DISTILLERY WAREHOUSES:
List of, for fiscal years 1888 and 1889 139

CATTLE FED AT REGISTERED GRAIN DISTILLERIES:
Aggregate increase of, in weight, by collection districts 57
Aggregate increase of, in weight, by States and Territories 58
Average increase of, in weight, by collection districts 57
Average increase of, in weight, by States and Territories 58
Number of, by collection districts 57
Number of, by States and Territories 58

CIGARETTES:
Exported and accounted for during fiscal year 1889, number of (241,106,750) 160
Exported and unaccounted for June 30, 1888, number of (12,704,500) 160
Exported and unaccounted for June 30, 1889, number of (18,277,500) 160
Increase (65,909,950) over previous year in number of, exported 23, 24
Number of, on which tax was paid during last two fiscal years, compared 6
Production of, during calendar year 1888 (2,211,900,645) 25
Receipts from, during fiscal years 1888 and 1889, compared 5, 23
Removed for export during the year, number of (246,679,750) 24, 160

CIGARS:
Exported and accounted for during fiscal year 1889, number of (1,530,550) 160
Exported and unaccounted for June 30, 1889, number of (213,275) 160
Imported during fiscal year 1889, number of (90,087,407) 23
Increase (266,700) over previous year in number of, exported 23, 24
Increase of collections on, over previous year ($67,976.97) 5, 23
Number of, on which tax was paid during last two fiscal years, compared 6
Production of, during calendar year 1888 (3,668,162,486) 25
Receipts from, during last two fiscal years, compared 5, 23
Removed for export and unaccounted for, June 30, 1888, number of (44,500) 160
Removed for export during fiscal year 1889, number of (1,699,325) 24, 160

CIGARS AND CIGARETTES:
Increase (377,624,900) over previous year in production of 24
Increase (311,448,250) over previous year in number of, taxed 23, 24
Increase ($212,444.60) over previous year in collections on 5, 23
Production of, during fiscal year 1889 (6,267,280,075) 24
Receipts from, during fiscal year 1889 ($12,677,987.60) 5, 23
Removed for consumption during fiscal year 1889, quantity of (6,018,901,000) 6, 24
Statement relating to production of, during calendar year 1888, by States and Territories.. 25

CIGARS, MANUFACTURERS OF:
Distribution of, among the several collection districts 35–37
Distribution of, among the States and Territories 33, 34, 38, 39

CLERKS IN THE SEVERAL COLLECTION DISTRICTS:
Number of, during fiscal year 1889 (185) 16
Schedule of salaries of, during fiscal year 1889 16

COLLECTORS:
Basis of recommendation of salaries of, for current fiscal year 15
Names of, for 1889 ..... 6, 7
Number of, during fiscal year 1889 (63) 15
Scale of salaries of 15
Schedule of salaries of, during fiscal year 1889 15

INDEX.

COLLECTORS' OFFICES:
Examination of, during the year
COLLECTORS DEPUTY:
Number of, during fiscal year 1889 (965)
Schedule of salaries of, during fiscal year 1889
COLLECTION DISTRICTS:
Aggregate receipts from, during fiscal year 1889
Names of, from which spirits were withdrawn for export during fiscal year 1888
Names of, from which spirits were withdrawn for export during fiscal year 1889
COMMISSIONER:
Report of, for fiscal year 1889, submitted
COMMISSIONER'S OFFICE:
Aggregate of force employed in, at close of fiscal years 1888 and 1889, compared
Aggregate of force in, recommended for fiscal year 1891 (201 persons)
Aggregate of salaries paid to officers, clerks, and employés in, during fiscal years 1
1889, compared
Condition of
Miscellaneous expenses of
Officers, clerks, and employés in, commended for the diligence, promptitude, and a
with which they have performed their duties
Schedule of force in, recommended for fiscal year 1891
Twelve clerks on rolls of, detailed for duty in other offices, suggestion that they b
ferred to the offices where they are now employed
Work performed by the several divisions in, during the year
COMPROMISE OFFERS RECEIVED AND ACCEPTED
DEALERS, RETAIL LIQUOR:
Distribution of, among the several collection districts
Distribution of, among the States and Territories
DEALERS, WHOLESALE LIQUOR:
Distribution of, among the several collection districts
Distribution of, among the States and Territories
Number of, October 1, 1889 (3,742)
DIRECT TAX:
Amount paid to redeem "school farms"
Number of releases already granted to original owners of "school farms" or other
"School farms" in South Carolina, time for redemption of, extended one year
"School farms" not sold at the expiration of time allowed for redemption, to be s
Commissioner
DISTILLATION OF SPIRITS, ILLICIT:
Statistics relating to operations for suppression of
DISTILLERIES:
Distribution of, among the States and Territories
Number of, operated during the year (4,349)
Number of, registered during the year (4,576)
DISTILLERIES, FRUIT:
Distribution of, among the several collection districts
Increase in number of, registered during the year (442), in number operated (465)
Number of, operated during the year (3,072)
Number of, registered during the year (3,126)
DISTILLERIES, GRAIN:
Capacities of, registered and operated during the year, by collection districts
Capacities of, registered and operated during the year, by States and Territories
Capacity and number of, in operation at the beginning of each month, from July,
September, 1889
Capacity and number of, in operation September 1, each year, from 1880 to 1889
Decrease in number of large distilleries registered during the year (2), increase in
operated (68)
Increase in number of, registered and operated during the year, occurs in small dist
Increase in number of small distilleries registered during the year (142), in numb
ated (170)
Number of, operated during the year (1,267)
Number of, registered and operated during last two fiscal years, compared
Number of, registered during the year (1,440)
Proportion of larger distilleries registered that were operated during fiscal years
1889 (59 and 89 per cent., respectively)
Proportion of smaller distilleries registered that were operated during fiscal ye
and 1889 (83 and nearly 88 per cent., respectively)
Spirit-producing capacity of, in operation at the beginning of each month from Ju
to September, 1889
DISTILLERIES, MOLASSES:
Capacity and number of, in operation at the beginning of each month from July,
September, 1889
Capacity and number of, in operation September 1, each year, from 1880 to 1889
Number of, operated during the year (10)
Number of, registered during the year (10)
Spirit-producing capacity of, in operation at the beginning of each month from Ju
to September, 1889
Spirit-producing capacity of, in operation September 1, each year, from 1880 to 188
DISTILLERIES, OTHER THAN FRUIT:
Capacity and number of, in operation at the beginning of each month from July,
September, 1889
Capacity and number of, in operation each year from 1880 to 1889
Spirit-producing capacity of, in operation at the beginning of each month, from Ju
to September, 1889
Spirit-producing capacity of, in operation September 1, each year, from 1880 to 188
DISTILLERS:
Names of
DISTILLERY SURVEYORS:
Number of, during the year (6)

Page.

DISTILLERY WAREHOUSES:
Acts of legislation that have tended to increase deposits in 150
Fluctuations in quantities of spirits deposited in, causes of, pointed out in previous annual reports 150
Index to tables showing operations at, during the year 70
Location of, in which spirits were held on deposit during the year 81-121
Summary of operations at, during the year 149

DRAWBACK:
Aggregate of, allowed from 1863 to 1889 ($7,273,289.33) 160
Allowed on spirits, tobacco, fermented liquors, stills, cigars, and cigarettes during fiscal year 1889, amount of 160
Allowed on spirits, tobacco, snuff, cigars and cigarettes, fermented liquors, stills, miscellaneous and proprietary articles, each year from 1877 to 1889, amount of 160

FERMENTED LIQUORS:
Distribution of brewers among collection districts, States and Territories 33-39
Distribution of dealers in, among collection districts, States and Territories 33-39, 42, 43
Quantities of, on which tax was paid during last two fiscal years, compared 6
Receipts from each source and aggregate receipts from all sources relating to, for last two fiscal years, compared 5
Receipts from the several sources relating to, for first three months of fiscal years 1889 and 1890, compared 9

FOOD AND DRUGS, ADULTERATION OF:
Act to prevent manufacture or sale of, in the District of Columbia—
Does not require Commissioner of Internal Revenue to procure samples of food or drugs for analysis 180
Lacks certain administrative features and clear definitions 180
Modeled on the "Sale of Food and Drugs Act, 1875," of Great Britain 180
Results that would follow the enforcement of a proper food-adulteration law in the District of Columbia 180
"Sale of Food and Drugs Act, 1875," of Great Britain, amended in 1879 180
European laws on subject of, why valuable 175
Federal laws on, alleged to interfere with the exercise of the police powers of the States 175
Foreign countries, copies of laws of, on food adulteration in this report, attention called to 175
No sample of food or drugs from the District of Columbia submitted to the Commissioner of Internal Revenue for analysis during the year, nor up to November 1, 1889; reasons why 175, 179
Opinion of Mr. Justice Blodgett (United States circuit court, eastern district Illinois) as to the right to import and sell; regulation of commerce; constitutional provision 176-179
State laws, certain, passed to prevent sale of impure food found to be unconstitutional 175
Unity of action between State and Federal authorities necessary before best results can be expected in legislation on 175

FOODS, ADULTERATIONS OF:
Force necessary to be provided for under a national law for the supervision and control of adulterated foods 181
Foreign laws, decrees, and regulations on the repression of adulterated food and drink—
Of Canada 184-189
Of France 216, 217
Of Italy 189
Of Turin 189, 190
Of Norway 194, 195
Of Portugal 190, 191
Of Lisbon 191
Of Sweden 192-194
Of Switzerland 195
Of Canton of Basel-City 195
Of Canton of Bern 195-202
Of Canton of Fribourg 202-205
Of Canton of Geneva 205-207
Of Canton of Neuchâtel 207-209
Of Canton of Valais 209-214
Of Canton of Vaud 214-216
Of Canton of Zurich 195
List of brands of food products found by analysis to be adulterated, under the laws of Canada, New Jersey, and Massachusetts 181
Baking powders 181
Alum baking powders, "package" coffee, cream of tartar, and canned vegetables 182
Lard, olive oil, ground spices, cayenne pepper, ginger, mace, and mustard 183
Black pepper and white pepper 184
Microscopist, report of, on 179
National law needed to regulate the sale of adulterated foods 180
Provisions that should be embodied in a national law on 181
Provisions that should be incorporated into State laws on, to make them more effective 180
State laws on, with one or two exceptions, inoperative 180

FRAUDS UPON THE REVENUE:
Accounts of expenditures for discovery of and punishment for, are filed in Register's Office, and pass through all accounting offices of the Treasury Department 14
Expenditures for discovery of and punishment for, by collectors 13
Expenditures for rewards 13
Similar expenditures by revenue agents 13
Similar expenditures under previous appropriations not heretofore reported 13
Statement of expenditures from appropriation for discovery of and punishment for, submitted 13
Total expenditures under appropriation ($29,138.03) 13

GAUGERS:
Expenditure for fees of, greater than estimated, reasons why 10
Fees of, not to exceed $5 per day 16
Number of (570) 16

Page.

GIN:
Decrease (478 gallons) from previous year in quantity of, allowed for leakage 128
Decrease (568 gallons) from previous year in quantity of, exported 136
Exported during fiscal year 1887, quantity of (3,470 gallons) 129
Exported during fiscal year 1888, quantity of (568 gallons) 129, 130, 148
Exported during fiscal year 1889, quantity of 130, 148
Increase (156,978 gallons) over previous year in production of 80
Increase (140,181 gallons) over previous year in quantity of, withdrawn from warehouse, tax-paid 124
Lost by leakage or evaporation in warehouse during fiscal years 1888 and 1889, quantities of (1,469 and 991 gallons, respectively) 127, 148
Lost by casualty during the year quantity of (2,479 gallons) 139, 148
Port from which exported during fiscal year 1888 (New York) 132
Ports to which exported during fiscal year 1888 132
Produced during fiscal years 1888 and 1889, quantities of (872,990 and 1,029,968 gallons, respectively) 79, 148
Remaining in warehouse at close of fiscal years 1887, 1888, and 1889, quantities of (81,396; 89,061, and 112,090 gallons, respectively) 77, 142, 148
Withdrawn from warehouse, tax-paid, during fiscal years 1888 and 1889, quantities of (863,288 and 1,063,469 gallons, respectively) 123, 148

HIGH WINES:
Decrease (19,480 gallons) from previous year, in quantity of, withdrawn from warehouse, tax-paid 124
Decrease (992 gallons) from previous year in quantity of, allowed for leakage 128
Decrease (6,952 gallons) from previous year in quantity of, exported 136
Exported during fiscal year 1888, quantity of (6,952 gallons) 129, 130, 148
Exported during fiscal year 1889 ..... 130, 148
Increase (13,059 gallons) over previous year in production of 80
Lost by leakage or evaporation in warehouse during fiscal years 1888 and 1889, quantities of (8,368 and 7,376 gallons, respectively) 127, 148
Port from which exported during fiscal year 1888 (New York) 132
Port to which exported during fiscal year 1888 (Hamburg) 132
Produced during fiscal years 1888 and 1889, quantities of (1,016,436 and 1,029,495 gallons, respectively) 79, 148
Remaining in warehouse at close of fiscal years 1887, 1888, and 1889, quantities of (179,665; 136,195, and 133,208 gallons, respectively) 77, 142, 148
Withdrawals of, from warehouse, tax-paid, during fiscal years 1888 and 1889, quantities of (1,044,586 and 1,025,106 gallons, respectively) 123, 148

HOGS FED AT REGISTERED GRAIN DISTILLERIES:
Aggregate increase of, in weight, by collection districts 57
Aggregate increase of, in weight, by States and Territories 58
Average increase of, in weight, by collection districts 57
Average increase of, in weight, by States and Territories 58
Number of, by collection districts 57
Number of, by States and Territories 58

INTERNAL REVENUE:
Aggregate receipts of, for first three months of fiscal years 1889 and 1890, compared 9
Aggregate receipts of, for fiscal year 1889 ($5,894,434.20 in excess of estimate) 4
Aggregate receipts of, for each fiscal year from 1882 to 1889, statement of 4
Aggregate receipts of, in States and Territories consolidated with other districts 8
Amount of, collected and reported to Commissioner by the several collectors during the year 6, 7
Amount of, collected and reported to Commissioner during the year, by States and Territories 8
Cost of collecting during fiscal year 1888 10
Cost of collecting during the year, detailed statement of 10
Cost of collecting, during fiscal year 1889 does not include cost of printing internal-revenue stamps 10
Deficiency for pay of storekeepers and gaugers from June 8 to end of fiscal year, amount of ($107,637) 10
Employment of gaugers and storekeepers for greater part of June last necessary, though all money appropriated for this purpose had been expended 10
Estimated expenses of collecting for fiscal year 1891 15
Estimate of aggregate receipts of, for current fiscal year ($135,000,000) 4
Percentage cost of collecting, during the year (less than 3.2) 10
Receipts of, from the several objects of taxation during first three months of fiscal years 1889 and 1890, compared 9
Receipts of, from the several objects of taxation during last two fiscal years, compared 4, 5

LEGISLATION RECOMMENDED:
Appropriating $2,500 as salaries for one stamp agent and one counter 20
Appropriating $261,990 for salaries of officers, clerks, and employés in the office of Commissioner for fiscal year 1891 20
Appropriation to fit up a new and enlarged laboratory 173
Authorizing the assessment and collection, monthly, of tax on whole number of proof or wine gallons which fractions of gallons removed from warehouse may aggregate; reasons for 58–60
Authorizing the Commissioner of Internal Revenue to employ not exceeding twenty-five revenue agents 14

LIQUOR-DEALERS AND DEALERS IN MALT LIQUORS:
Equated number of, in the several States and Territories, by special-tax years ended April 30, from 1878 to 1889 40–43

LIQUOR-DEALERS, RETAIL:
Distribution of, among the several collection districts 35–37
Distribution of, among the States and Territories 33, 34, 38–41

LIQUOR-DEALERS, WHOLESALE:
Distribution of, among the several collection districts 35–37
Distribution of, among the States and Territories 33, 34, 38–41

MALT LIQUORS, DEALERS IN:
Distribution of, among the several collection districts 35–37
Distribution of, among the States and Territories 33, 34, 38, 39, 42, 43

Page.

MANUFACTURING WAREHOUSES:
Alcohol withdrawn for transfer to, during fiscal years 1888 and 1889, quantities of (25,817 and 25,622 gallons, respectively) 137, 148
All kinds of spirits withdrawn for transfer to, during fiscal years 1888 and 1889, quantities of, compared 137
All kinds of spirits withdrawn for transfer to, during fiscal years 1888 and 1889, quantities of (79,601 and 171,466 gallons, respectively) 137, 148
Bourbon whisky withdrawn for transfer to, during fiscal years 1888 and 1889, quantities of (2,705 and 6,543 gallons, respectively) 137, 148
Miscellaneous kinds of spirits withdrawn for transfer to, during fiscal year 1888 (1,901 gallons) 137, 148
Pure, neutral, or cologne spirits withdrawn for transfer to, during fiscal years 1888 and 1889, quantities of (48,789 and 134,868 gallons, respectively) 137, 148
Rye whisky withdrawn for transfer to, during fiscal years 1888 and 1889, quantities of (389 and 4,433 gallons, respectively) 137, 148
MISCELLANEOUS SOURCES OF REVENUE:
Receipts from each source relating to, during fiscal years 1888 and 1889, compared 5
Receipts from each source relating to, during first three months of fiscal years 1889 and 1890, compared 9
OLEOMARGARINE:
Analyses of vegetable oils, table of 173
Analyses of substances submitted for examination by collectors of internal revenue, table of 172
Analysis of ingredients received from factories, table of 173
Analytical chemist, report of 169
Average monthly production of, during the eight months ended June 30, 1887, and twelve months ended June 30, 1888 and 1889 (2,711,828; 2,860,460, and 2,972,002 pounds, respectively) 161
Average monthly withdrawals of, for export during the eight months ended June 30, 1887, and twelve months ended June 30, 1888 and 1889 (90,566; 140,516, and 145,746 pounds, respectively) 161
Average monthly withdrawals of, tax-paid, during the eight months ended June 30, 1887, and twelve months ended June 30, 1888 and 1889 (2,592,946; 2,707,430, and 2,821,970 pounds, respectively) 161
Butter, articles resembling, number of samples of, examined by collectors and deputy collectors with microscopes in the several collection districts 174
"Butter color," sample of, purchased in Washington, D. C., alleged properties of 170
"Butter colors," proportion of annotto in, less than 10 per cent 170
"Butter colors," vegetable or animal oils used in, are incorporated in butter when cream is churned 170, 171
Coloring of butter, objections to, as stated by Dr. J. F. Babcock, inspector of milk and vinegar for the city of Boston, in his last annual report 171
Coloring of butter or cheese, objections to, as stated by Dr. B. F. Davenport in his report for 1888, on the analyses of foods, to the State board of health of Massachusetts 171
Consumers of, now generally supplied by manufacturers and wholesale dealers 170
European laws on oleomargarine, set of, in this and last two reports of Commissioner, complete 162
European laws on subject of, copies of, found in last two reports of Commissioner, how obtained 162
Foreign fat added to butter, amount of, difficult to ascertain 170
Has, after three years' trial, assumed its legitimate place as a cheap and wholesome food product 170
Laboratory, Municipal, of Paris, samples of food and beverages analyzed, and special investigations carried on by the chemists there employed 174
Laboratory of the Inland Revenue Department of Great Britain in London, enumeration of the different kind of work performed by the chemists employed in 173, 174
Manufacturers of, and dealers in, number of, by States and Territories 166
Manufacturers of, and wholesale dealers in, April, 1888 and April, 1889, location of 167, 168
Menstruums in which annotto is soluble 170
Microscopes, one good effect of use of 162
Microscopes, with necessary instructions, etc., sent to all of the collectors and to several revenue agents during the year 170
Microscopes with polarizing attachments for examination of suspected butter distributed among collectors during the year 162
Microscopist, report of, on 170-174
Microscopist, work performed by, during the year, different kinds of 170
Months in which production of, fell below 2,000,000 pounds 163
Months of largest production of, during fiscal years 1887, 1888, and 1889 161
Netherlands, The, law of June 23, 1889, concerning the suppression of fraud in the trade of butter 217
Operations in, during last two fiscal years, by collection districts, table of 163
Persons engaged in the sale of, during the year, increase in number of 162
Production of, during the year, increase in 162
Production, withdrawals, and losses of, in manufactories from November 1, 1886, to June 30, 1889, by months, statement of 164
Quantities of, on which tax was paid during fiscal years 1888 and 1889 (32,667,755 and 33,865,120 pounds, respectively) 6
Quantity of, in United States June 30, 1889 165
Receipts from each source relating to, during first three months of fiscal years 1889 and 1890, compared 9
Receipts from each source relating to, during fiscal year 1889, by collection districts, statement of 165
Receipts from each source relating to, during fiscal years 1888 and 1889, compared 5
Retail dealers in, April, 1888, and April, 1889, number of, by collection districts 167
Retail dealers in, gradually giving up handling oleomargarine 170
Russia, laws and regulations of, relating to manufacture and sale of 217
Russia, ordinance published by Municipality of St. Petersburg concerning trade in 217
Samples of articles other than suspected butter received and analyzed 170
Samples of suspected butter received and analyzed, number of (95) 170

Page.

OLEOMARGARINE—Continued.
Secretary of State, letter of, relative to laws in Russia on artificial butter 162
Special-tax payers, relating to, doing business in April, 1887, 1888, and 1889, number of..... 162
Statements relating to, list of 161
States from which come most of the samples submitted for analysis 170
Substances which may and substances which may not be added to butter without making the mixture oleomargarine 170
Use of, in violation of internal-revenue laws diminishing 170
Vegetable oil (butter color) added to butter in quantity so small that its presence can not be detected by quantitative analysis makes the mixture oleomargarine..... 171
Vegetable oils, with cream, combination of, practically illustrated 171
OLEOMARGARINE MANUFACTORIES:
Summary of operations at, during fiscal year 1889 ..... 162, 163
OLEOMARGARINE, MANUFACTURERS OF:
Distribution of, among the several collection districts..... 35–37
Distribution of, among the States and Territories 33, 34, 38, 39
OLEOMARGARINE, RETAIL DEALERS IN:
Distribution of, among the several collection districts 35–37
Distribution of, among the States and Territories..... 33, 34, 38, 39
OLEOMARGARINE, WHOLESALE DEALERS IN:
Distribution of, among the several collection districts 35–37
Distribution of, among the States and Territories 33, 34, 38, 39
OLEO OIL:
Exported during fiscal years 1888 and 1889, quantities of, compared 174
PORTERS, MESSENGERS, OR JANITORS IN THE SEVERAL COLLECTION DISTRICTS:
Number of, during fiscal year 1889 (29) 16
Schedule of salaries of, during fiscal year 1889..... 16
REAL ESTATE ACQUIRED UNDER THE INTERNAL-REVENUE LAWS:
Sales of, dates of..... 32
Sales of, during the year, amounts of..... 32
Sold during the year, where situated..... 32
When and from whom acquired 32
REBATE CLAIMS..... 31
RECTIFIERS:
Distribution of, among the several collection districts 35–37
Distribution of, among the States and Territories..... 33, 34, 38, 39
Number of, October 1, 1889 (1,160) 153
REFUNDING CLAIMS 31, 32
REVENUE AGENTS:
Commuting hotel bills by a per diem allowance, objections to 15
Compensation of 14
Distribution of 12
Employed under act making appropriation for legislative, executive, and judicial expenses for fiscal year 1885, number of (20)..... 14
Employed under act of March 1, 1879, number of (35) 14
Employed under provisions of section 3152, Revised Statutes, number of (25)..... 14
Number of, employed during the year (20) 12
Present number of, insufficient for work required of them 14
Salaries and expenses of, during the year..... 12
Traveling expenses of, recommendation as to 14
Value of services rendered by 14
Work performed by, during the year 12
RUM:
Decrease (420,192 gallons) from previous year in production of..... 80
Decrease (750 gallons) from previous year in quantity of, allowed for leakage..... 128
Decrease (376,629 gallons) from previous year in quantity of, exported 136
Decrease (62,607 gallons) from previous year in quantity of, withdrawn from warehouse, tax-paid, during the year 124
Distilled from molasses during last fiscal year, quantity of, compared with average product of last ten years 54
Distilled from molasses during last two fiscal years, quantities of, compared 54
Exported during fiscal year 1887, quantity of (755,147 gallons).. 129
Exported during fiscal year 1888, quantity of (800,534 gallons) 129, 130, 148
Exported during fiscal year 1889, quantity of (423,905 gallons)..... 130, 148
Lost by casualty during fiscal year 1888 ..... 139, 148
Lost by casualty during fiscal year 1889, quantity of (1 gallon)..... 139
Lost by leakage or evaporation in warehouse during fiscal years 1888 and 1889, quantities of (22,698 and 21,948 gallons, respectively)..... 127, 148
Molasses used for production of, during last two fiscal years, quantities of, compared..... 54
Molasses used for production of, during past year, quantity of, compared with average product of last ten years 54
Ports from which exported during fiscal year 1888..... 132
Ports from which exported during fiscal year 1889 135
Ports to which exported during fiscal year 1888 132
Ports to which exported during fiscal year 1889..... 135
Produced during each of last ten fiscal years, quantities of..... 54
Produced during fiscal years 1888 and 1889, quantities of (1,891,246 and 1,471,054 gallons, respectively) 79, 148
Remaining in warehouse at close of fiscal years 1887, 1888, and 1889, quantities of (792,471; 745,941, and 719,204 gallons, respectively)..... 77, 142, 148
Withdrawn from warehouse, tax-paid, during fiscal years 1888 and 1889, quantities of, (1,114,544 and 1,051,937 gallons, respectively)..... 123, 148
RYE WHISKY:
Decrease (75 gallons) from previous year, in quantity of, withdrawn for scientific purposes and use of United States..... 136
Exported during fiscal year 1887, quantity of (47,535 gallons) 129
Exported during fiscal year 1888, quantity of (172,232 gallons)..... 129, 130, 148
Exported during fiscal year 1889, quantity of (369,812 gallons) 130, 148
Increase (2,870,078 gallons) over previous year in production of..... 80

Page.

RYE WHISKY—Continued.
Increase (246,916 gallons) over previous year in quantity of, allowed for leakage 128
Increase (197,580 gallons) over previous year in quantity of, exported 136
Increase (4,044 gallons) over previous year in quantity of, transferred to manufacturing warehouses 137
Increase (1,089,403 gallons) over previous year in quantity of, withdrawn from warehouse, tax-paid 124
Lost by casualty during fiscal years 1888 and 1889, quantities of (1,457 and 3,023 gallons, respectively) 139, 148
Lost by leakage or evaporation in warehouse during fiscal years 1888 and 1889, quantities of (692,070 and 938,986 gallons, respectively) 127, 148
Ports from which exported during fiscal year 1888 133
Ports from which exported during fiscal year 1889 135
Ports to which exported during fiscal year 1888 132
Ports to which exported during fiscal year 1889 135
Produced during fiscal years 1888 and 1889, quantities of (5,879,690 and 8,749,768 gallons, respectively) 79, 148
Remaining in warehouse at close of fiscal years 1887, 1888, and 1889, quantities of (17,498,692; 17,367,380, and 18,562,468 gallons, respectively) 77, 142, 148
Withdrawn for scientific purposes and use of United States during fiscal years 1888 and 1889, quantities of (854 and 779 gallons, respectively) 136, 148
Withdrawn for transfer to manufacturing warehouses during fiscal years 1888 and 1889, quantities of (389 and 433 gallons, respectively) 137, 148
Withdrawn from warehouse, tax-paid, during fiscal years 1888 and 1889, quantities of (5,148,244 and 6,237,647 gallons, respectively) 123, 148

SERVICE, INTERNAL-REVENUE:
Present condition of 10

SNUFF:
Quantities of, manufactured during calendar year 1888, by States and Territories 27
Receipts from, during last two fiscal years, compared 5

SPECIAL BONDED WAREHOUSES FOR STORAGE OF FRUIT BRANDY:
Act of October 12, 1888, authorizing distillers of apple brandy and peach brandy to deposit products in, not generally taken advantage of during the year 159
Apple and peach brandy remaining in, June 30, 1889 (91,219 and 2,510 gallons, respectively) .. 159
Fruit brandy in warehouses June 30, 1889, distribution of, among 158
Names of proprietors of 158
Quantities of fruit brandy remaining in, July 1, 1888, and June 30, 1889 (974,330 and 1,416,426 gallons, respectively) 156, 157

SPECIAL-TAX PAYERS:
Actual number of different kinds of, in special-tax year ended April 30, 1889, by collection districts 35–37
Actual number of different kinds of, in special-tax year ended April 30, 1889, by States and Territories 38, 39
Equated number of different kinds of, in special-tax year ended April 30, 1889, by States and Territories 33, 34

SPIRITS:
Allowed for leakage or evaporation during last ten years, percentages of quantities of, to quantities withdrawn from warehouse 128
Allowed for leakage or evaporation during last ten years, quantities of 128
Allowed for leakage or evaporation during the year, under provisions of section 17, act of May 28, 1880, quantity of (3,145,111 gallons) 128
Allowed for leakage or evaporation, under provisions of section 17, act of May 28, 1880, during last two fiscal years, quantities of, compared 128
Distilled from fruit on which tax was paid during last two fiscal years, quantities of, compared 6
Distilled from grain, average yield of, per bushel (4.18+gallons) 53, 54
Distilled from materials other than fruit on which tax was paid during last two fiscal years, quantities of, compared 6
Distilled from molasses, average yield of, per gallon (.753+gallon) 53
Erroneous charges to casualty and export accounts in previous years corrected 148
Exported and re-imported during the year, on payment of customs duty equal to internal-revenue tax, quantity of (1,615,316 gallons) 124
Exported during fiscal years 1888 and 1889, quantities of (1,514,205 and 2,590,235 gallons, respectively) 129, 130, 135, 148
Grain used for production of, during last two fiscal years, quantities of, compared 54
Grain used for production of, during last year, quantity of, compared with average product of last ten years 54
Held by each retail liquor dealer in the United States October 1, 1889, estimated average quantity of (150 gallons) 159
Held by wholesale liquor dealers and rectifiers October 1, each year from 1878 to 1889, quantities of 151
Held by wholesale liquor dealers and rectifiers October 1, 1888, by collection districts, quantities of 152
In warehouse June 30, 1888, by collection districts and months of production, quantities of 71–75
In warehouse June 1, 1889, by collection districts and months of production, quantities of 143–147
Leakage allowed on each kind of spirits withdrawn from warehouse during the year, amount and percentage of 128
Lost by casualties during last two fiscal years, quantities of (21,193 and 36,123 gallons, respectively) 139, 148
Lost by leakage or evaporation in warehouse during last two fiscal years, quantities of (2,209,327 and 3,145,111 gallons, respectively) 127, 148
Materials used for production of, during last ten years, statement of 54
Materials used for production of, during the year, by collection districts, quantities of 51, 52
Materials used for production of, during the year, by States and Territories, quantities of. 53
Privilege of storing brandy distilled from apples and peaches in special bonded warehouses authorized by act approved October 12, 1888 158
Produced from grain during each of last ten fiscal years, quantities of 54

Page.

SPIRITS—Continued.
Produced from grain during fiscal year 1889, compared with average product of last ten years 54
Produced from grain during last two fiscal years, quantities of, compared 54
Production of, during fiscal years 1888 and 1889, quantities of (70,279,406 and 89,358,510 gallons, respectively) 79, 148
Production of, during last two fiscal years, compared 80
Production of, from grain and molasses during last ten years, statement of 54
Receipts from each source relating to, during first three months of fiscal years 1889 and 1890, compared 9
Receipts from each source, relating to, for fiscal years 1888 and 1889, compared 4
Rectified during special-tax year ended April 30, 1889, by collection districts, quantities of ... 56
Rectified during special-tax year ended April 30, 1889, by States and Territories, quantities of .. 56
Remaining in warehouse at close of fiscal years 1887, 1888, and 1889, aggregate quantities of (65,145,269; 61,033,018, and 68,512,070 gallons, respectively) 75, 77, 142, 147, 148, 149, 150
Removed in bond, for export, by fiscal years, from 1873 to 1889, percentages of quantities of, to production 135
Removed in bond for export, by fiscal years, from 1873 to 1889, quantities of 135
Removed in bond for export, during fiscal year 1888, quantities of, by collection districts ... 129
Removed in bond for export, during fiscal year 1889, quantities of, by collection districts ... 130
Statements prepared from reports in Division of Distilled Spirits 44
Stock on hand, production and movement of, for each fiscal year from 1885 to 1889 150
Taxes on deficiencies in production of 69
Taxes on excess of materials used, abated before assessment 69
Withdrawn for export during first four months of fiscal year 1883, and first three months of fiscal years 1884, 1885, 1886, 1887, 1888, 1889, and 1890, quantities of, by collection districts 156
Withdrawn for export during fiscal years 1888 and 1889, quantities of, compared (increase, 1,076,030 gallons) 135, 136
Withdrawn for scientific purposes and use of United States, during fiscal years 1888 and 1889, quantities of, compared (increase, 9,174 gallons) 136
Withdrawn for scientific purposes and use of United States, during fiscal years 1888 and 1889, quantities of (25,614 and 34,788 gallons, respectively) 136, 148
Withdrawn for transfer to manufacturing warehouses during last two fiscal years, quantities of (79,601 and 171,466 gallons, respectively) 137, 148
Withdrawn from warehouse during the year, upon payment of the tax, quantities of, by collection districts 122, 123
Withdrawn from warehouse during each of last ten years, statement of 128
Withdrawn from warehouse, tax-paid, during fiscal years 1888 and 1889, quantities of (70,541,811 and 75,901,735 gallons, respectively) 123, 148
Withdrawn from warehouse, tax-paid, during last two fiscal years, quantities of, compared 124
Withdrawn, tax-paid, during last two fiscal years, including domestic spirits exported and re-imported, quantities of (73,177,603 and 77,517,051 gallons, respectively) 124
Yield of spirits per bushel of grain during last three fiscal years, compared 54

SPIRITS, DIFFERENT KINDS OF:
Actual rate of tax collected from the original gauge of 129
Held by wholesale liquor dealers and rectifiers, October 1, 1889, by collection districts, quantities of 152, 153
Increase (19,079,104 gallons) over previous year in production of 80
Increase in withdrawals of, tax-paid, over previous year (5,359,924 gallons) 124
In warehouse June 30, 1887, aggregate quantities of 77
In warehouse June 30, 1888, quantities of, by collection districts 76, 77
In warehouse June 30, 1888, aggregate quantities of 77, 142, 148
In warehouse June 30, 1889, quantities of, by collection districts 141, 142
In warehouse June 30, 1889, aggregate quantities of 142, 147, 148
Lost by casualties during the year, quantities of, by collection districts 139
Lost by casualties during the year, aggregate quantity of 139, 148
Lost by leakage or evaporation in warehouse during the year, quantities of, by collection districts 126, 127
Ports from which exported during fiscal year 1888 ..... 131, 132
Ports from which exported during fiscal year 1889 133–135
Ports to which exported during fiscal year 1888 ..... 131, 132
Ports to which exported during fiscal year 1889 133–135
Produced during fiscal year 1888, aggregate quantity of 79, 148
Produced during fiscal year 1889, aggregate quantity of 79, 148
Produced during fiscal year 1889, quantities of, by collection districts 78, 79
Produced, withdrawn from, and remaining in warehouse at close of the year 148
Statement of quantities of, deposited in bonded warehouses during each of last 12 years ... 80
Withdrawn for export during first three months of current fiscal year, by collection districts, quantities of 155
Withdrawn for export during fiscal year 1888, quantities of, by collection districts 129
Withdrawn for export during fiscal year 1889, aggregate quantity of 130, 148
Withdrawn for export during fiscal year 1889, quantities of, by collection districts 130
Withdrawn for scientific purposes and use of United States during fiscal year 1889, aggregate quantity of 136, 148
Withdrawn for scientific purposes and use of United States during fiscal years 1888 and 1889, by collection districts 136
Withdrawn for scientific purposes and use of United States during fiscal years 1888 and 1889, quantities of 136, 148
Withdrawn for transfer to manufacturing warehouses during fiscal years 1888 and 1889, quantities of 137, 148
Withdrawn for transfer to manufacturing warehouses during fiscal year 1889, aggregate quantity of 137, 148
Withdrawn for transfer to manufacturing warehouses during the year, quantities of, by collection districts 137
Withdrawn from warehouse, tax-paid, during fiscal year 1889, quantity of (75,901,735 gallons) 123, 148
Withdrawn from warehouse, tax-paid, during the year, quantities of, by collection districts 122, 123

Page.

SPIRITS DISTILLED DURING FIRST THREE MONTHS OF FISCAL YEAR 1889:
Aggregate amount of tax paid on, by months ... 154
Aggregate production of, by months ... 154
Aggregate withdrawals of, by months ... 154
SPIRITS DISTILLED DURING FIRST THREE MONTHS OF FISCAL YEAR 1890:
Amount of tax paid on, by months, and by States and Territories ... 154
Production of, by months, and by States and Territories ... 154
Withdrawals of, for consumption, by months, and by States and Territories ... 154
SPIRITS EXPORTED:
During each of last seventeen years, quantities of ... 135
During each of last seventeen years, percentages of quantities of, to quantities produced ... 135
During fiscal year 1887, quantity of (2,223,913 gallons) ... 129
During fiscal year 1888, quantity of (1,514,205 gallons) ... 129, 130
During fiscal year 1889, quantity of (2,590,235 gallons) ... 130, 148
SPIRITS IN UNITED STATES OCTOBER 1, 1889:
Distribution of ... 159
Estimated aggregate quantity of (102,650,982 gallons) ... 159
SPIRITS IN WAREHOUSE AT CLOSE OF THE YEAR:
Quantities of, for 1888, with month of production, from June, 1885, to June, 1888, by collection districts ... 71-75
Quantities of, for 1889, with month of production, from June, 1886, to June, 1889, by collection districts ... 143-147
Quantities of, from 1869 to 1889, statement of ... 150
Quantity of each month's production of, for 1888, from June, 1885, to June, 1888 ... 124, 125
Quantity of each month's production of, prior to July 1, 1888, for 1889 ... 124, 125
Quantity of each month's production of, prior to July 1, 1888, withdrawn during the year ... 124, 125
Quantity of, for 1879, more than 5,000,000 gallons greater than for 1878 ... 150
Quantity of, since 1879 rapidly increased to 1882 ... 150
SPIRITS IN WAREHOUSE OCTOBER 1, 1884:
Aggregate quantity of (53,749,246 gallons) ... 155
Quantities of, by States and Territories ... 156
SPIRITS IN WAREHOUSE OCTOBER 1, 1885:
Aggregate quantity of (47,158,358 gallons) ... 155
Quantities of, by States and Territories ... 155
SPIRITS IN WAREHOUSE OCTOBER 1, 1886:
Aggregate quantity of (54,303,818 gallons) ... 155
Quantities of, by States and Territories ... 155
SPIRITS IN WAREHOUSE OCTOBER 1, 1887:
Aggregate quantity of (61,608,377 gallons) ... 155
Quantities of, by States and Territories ... 155
SPIRITS IN WAREHOUSE OCTOBER 1, 1888:
Aggregate quantity of (52,554,625 gallons) ... 155
Quantities of, by States and Territories ... 155
SPIRITS IN WAREHOUSE OCTOBER 1, 1889:
Aggregate quantity of (61,351,697 gallons) ... 155
Quantities of, by States and Territories ... 155
SPIRITS LOST BY CASUALTY:
Average percentage loss of spirits by fire during last seventeen calendar years, $\frac{1}{100}$ of 1 ... 140
By fire during each of last seventeen calendar years ... 140
During last two fiscal years, quantities of (21,193 and 36,123 gallons, respectively) ... 139, 148
During six months ended June 30, 1889, quantity of (18,256 gallons) ... 140
During the year, detailed statement of ... 139
SPIRITS LOST BY LEAKAGE OR EVAPORATION IN WAREHOUSE:
During fiscal years 1888 and 1889, quantities of (2,209,327 and 3,145,111 gallons, respectively) ... 128
During last nine fiscal years, quantities of ... 128
SPIRITS, MISCELLANEOUS:
Decrease (1,901 gallons) from previous year in quantity of, transferred to manufacturing warehouses ... 137
Exported during fiscal year 1887, quantity of (31,690 gallons) ... 129
Exported during fiscal year 1888, quantity of (12,058 gallons) ... 129, 130, 148
Exported during fiscal year 1889, quantity of (33,967 gallons) ... 130, 148
Increase (21,909 gallons) over previous year, in exportation of ... 136
Increase (1,135,069 gallons) over previous year in production of ... 80
Increase (33,605 gallons) over previous year in quantity of, allowed for leakage ... 128
Increase (652,177 gallons) over previous year in quantity of, withdrawn from warehouse, tax-paid, during the year ... 124
Lost by casualties during fiscal years 1888 and 1889, quantities of (17,689 and 14,949 gallons, respectively) ... 139, 148
Lost by leakage or evaporation in warehouse during fiscal years 1888 and 1889, quantities of (192,933 and 226,538 gallons, respectively) ... 127, 148
Ports from which exported during fiscal year 1888 ... 132
Ports from which exported during fiscal year 1889 ... 135
Ports to which exported during fiscal year 1888 ... 132
Ports to which exported during fiscal year 1889 ... 135
Produced during fiscal years 1888 and 1889, quantities of (12,603,883 and 13,738,952 gallons, respectively) ... 79, 148
Remaining in warehouse at close of fiscal years 1887, 1888, and 1889, quantities of (4,937,007; 5,912,798, and 7,320,608 gallons, respectively) ... 77, 142, 148
Withdrawals of, from warehouse, tax-paid, during fiscal years 1888 and 1889, quantities of (11,403,511 and 12,055,688 gallons, respectively) ... 123, 148
Withdrawals for transfer to manufacturing warehouses during fiscal year 1888, quantity of (1,901 gallons) ... 137, 148
SPIRITS, PURE, NEUTRAL, OR COLOGNE:
Decrease (3,613 gallons) from previous year in quantity of, exported ... 136
Decrease (444 gallons) from previous year in quantity of, withdrawn for scientific purposes and use of United States ... 136
Exported during fiscal year 1887, quantity of (284,385 gallons) ... 129
Exported during fiscal year 1888, quantity of (67,344 gallons) ... 129, 130, 148

Page.
SPIRITS, PURE, NEUTRAL, OR COLOGNE—Continued.
Exported during fiscal year 1889, quantity of (63,731 gallons) 130, 148
Increase (12,796 gallons) over previous year in quantity of, allowed for leakage 128
Increase (86,079 gallons) over previous year in quantity of, transferred to manufacturing warehouses 137
Increase (963,441 gallons) over previous year in production of 80
Increase (860,456 gallons) over previous year in quantity of, withdrawn from warehouse, tax-paid, during the year 124
Lost by casualty during the year, quantity of (86 gallons) 139, 148
Lost by leakage or evaporation in warehouse during fiscal years 1888 and 1889, quantities of (8,626 and 21,422 gallons, respectively) 127, 148
Ports from which exported during fiscal year 1888 131
Ports from which exported during fiscal year 1889 133
Ports to which exported during fiscal year 1888 131
Ports to which exported during fiscal year 1889 133
Produced during fiscal years 1888 and 1889, quantities of (29,475,913 and 30,439,354 gallons, respectively) 79, 148
Remaining in warehouse at close of fiscal years 1887, 1888, and 1889, quantities of (497,178; 1,555,787 and 2,622,477 gallons, respectively) 77, 142, 148
Withdrawn for scientific purposes and use of United States during fiscal years 1888 and 1889, quantities of (2,858 and 2,414 gallons, respectively) 133, 148
Withdrawn for transfer to manufacturing warehouses during fiscal years 1888 and 1889, quantities of (48,789 and 134,868 gallons, respectively) 137, 148
Withdrawn from warehouse, tax-paid, during fiscal years 1888 and 1889, quantities of (28,289,687 and 29,150,143 gallons, respectively) 123, 148
SPIRITS WITHDRAWN FOR SCIENTIFIC PURPOSES AND USE OF UNITED STATES:
Increase or decrease in different kinds of, during the year, reasons for 137
STAMP AGENT AND COUNTER:
Salaries of, reimbursed to Government by John J. Crooke Company 22
STAMPS, CHECK AND PROPRIETARY:
Claims for redemption of (66), received from July 1, 1888, to June 30, 1889, were rejected and returned 21
Claims for redemption of, undisposed of at close of the year, deposited in vault for safe-keeping 21
STAMPS, INTERNAL-REVENUE:
Contract for manufacture of about 450,000 pounds of paper for, awarded to the Fairchild Paper Company, of Boston, Mass 21
Kind of, issued during the year 21
Kind of, printed by Bureau of Engraving and Printing during the year 22
Kind of, printed by John J. Crooke Company during the year 22
Manufacturing paper for, commenced August 13, 1889 21
Number of packages of, forwarded for redemption, undisposed of at close of fiscal year (78) 21
Number of, issued during the year (763,385,204) 21
Price per pound paid for paper for, under present contract, 6.3 cents, under contract for previous year 6.7 cents 21
Receipts from, during fiscal year 1889 ($14.50) 7, 8
Result of counts of, in vault, made January and March, 1889 22
Stamp Division commended by committee appointed to count stamps in vault, for its system of checks and balances, and for having handled over one billion stamps without a single error 22
Stamps for tobacco, imprinted on tin-foil wrappers, without expense to the Government, under contract with John J. Crooke Company, of New York 22
Three bids presented for furnishing paper for printing, during present fiscal year 21
Two official counts of, in vault, by committee appointed by the Secretary of the Treasury—the first completed January 10, 1889; the second March 30, 1889 22
Value of, issued during the year ($147,250,112.01) 21
STATISTICS:
Relating to seizures, judgments, compromises, criminal actions, civil actions *in personam*, *in rem*, etc 28–30
STILLS, MANUFACTURERS OF:
Distribution of, among the several collection districts 35–37
Distribution of, among the States and Territories 33, 34, 38, 39
STOCK FED AT REGISTERED GRAIN DISTILLERIES:
Aggregate increase of, in weight, by collection districts 57
Aggregate increase of, in weight, by States and Territories 58
Average increase of, in weight (164+pounds) 58
Number of (91,463) 58
STORE-KEEPERS:
Expenditure for salaries of, greater than estimated, reasons why 10
Number of (536) 16
Pay of, assigned to distilleries of daily capacities not over 20 bushels, $2 per day 16
Pay of, not over $4 per day 16
STORE-KEEPER AND GAUGERS:
Number of (884) 16
Pay of, assigned to distilleries of daily capacities not over 20 bushels, $2 per day 16
Pay of, not over $4 per day 16
STORE-KEEPERS' AND STORE-KEEPER AND GAUGERS' COMPENSATION:
Scale of 16
TABLES:
Titles of, for fiscal year 1889 and years previous 3, 4
TOBACCO:
Increase or decrease of special taxes relating to, as compared with previous year, amount of 24
Receipts from all sources relating to, during last fiscal year ($31,866,860.42) 5, 23
Receipts from each source and from all sources relating to, during fiscal years 1888 and 1889, compared 5, 23, 24
Receipts from the several sources relating to, during first three months of fiscal years 1889 and 1890, compared 9
Special-tax payers engaged in the manufacture and sale of, during fiscal years 1888 and 1889, number of 24

Page.

TOBACCO FACTORIES:
Aggregate number of (914) 26
Number of, by States and Territories 26
TOBACCO, LEAF:
Aggregate quantity of, used in manufacture of cigars and cigarettes during calendar year 1888 (82,866,929 pounds) 25
Aggregate quantity of, used in manufacture of tobacco and snuff during calendar year 1888 (185,268,700 pounds) 26
Used in manufacture of cigars and cigarettes during calendar year 1888, quantities of, by States and Territories 25
Used in manufacture of tobacco and snuff during calendar year 1888, quantities of, by States and Territories 26
TOBACCO, LEAF, DEALERS IN:
Distribution of, among the several collection districts 35-37
Distribution of, among the States and Territories 33, 34, 38, 39
TOBACCO, LEAF, NOT OVER 25,000 POUNDS, DEALERS IN:
Distribution of, among the several collection districts 35-37
Distribution of, among the States and Territories 33, 34, 38, 39
TOBACCO, LEAF, RETAIL DEALERS IN:
Distribution of, among the several collection districts 35-37
Distribution of, among the States and Territories 33, 34, 38, 39
TOBACCO, MANUFACTURED, DEALERS IN:
Distribution of, among the several collection districts 35-37
Distribution of, among the States and Territories 33, 34, 38, 39
TOBACCO, MANUFACTURERS OF:
Distribution of, among the several collection districts 35-37
Distribution of, among the States and Territories 33, 34, 38, 39
TOBACCO, PEDDLERS OF:
Distribution of, among the several collection districts 35-37
Distribution of, among the States and Territories 33, 34, 38, 39
TOBACCO, MANUFACTURED, AND SNUFF:
Exported during calendar year 1888, quantity of (13,963,211 pounds) 27
Increase (118,183 pounds) over previous year in quantity of, exported 23, 24
Increase of collections on, over previous year, amount of 5, 23
Increase (12,162,267 pounds) over previous year, in production of 24
In process of manufacture, December 31, 1888, quantity of (8,951,116 pounds) 26
Manufactured during calendar year 1888, aggregate quantity of (209,353,016 pounds) 27
Materials used in manufacture of, during calendar year 1888, aggregate quantity of different kinds of (260,524,854 pounds) 26
Materials used in manufacture of, during calander year 1888, different kinds of 26
On hand January 1, 1888, quantity of (21,921,660 pounds) 27
On hand January 1, 1889, quantity of (20,143,611 pounds) 27
Production of, during fiscal years 1888 and 1889, compared 24
Production of, during fiscal year 1889 (235,147,279 pounds) 24
Quantities of different kinds of, made during calendar year 1888, by States and Territories 27
Quantities of, on which tax was paid during last two fiscal years, compared 6
Quantity of, on which tax was paid during fiscal year 1889 (221,524,869 pounds) 6, 24
Quantity of (231,274,676 pounds), to be accounted for during calendar year 1888 27
Sold during calendar year 1888, quantity of (197,167,854 pounds) 27
Special-tax payers, relating to, increase in number of, during the year, apparent not real 25
Statistics relating to production, sale, exportation, etc., of, during calendar year 1888, by States and Territories 24, 27
Statistics relating to quantities of leaf-tobacco and other materials used in the manufacture of, during calendar year 1888, by States and Territories 26
Tables showing number of persons or firms engaged in business of manufacturing, materials used, and products manufactured by them, compiled from reports of collectors, for calendar year 1888 25
Value of, imported during the year ($70,353) 23
Value of stamps used to cover sales of, during calendar year 1888 ($15,773,428.32) 27
TOBACCO, MANUFACTURED, AND SNUFF IN BOND:
Exported and accounted for during the year, quantity of (13,858,377⅞ pounds) 159
Removed for export and unaccounted for July 1, 1888, quantity of (1,296,672 pounds) 159
Removed for export and unaccounted for June 30, 1889, quantity of (1,060,704⅛ pounds) 159
Removed for export during fiscal year 1889, quantity of (13,622,410⅛ pounds) 24, 159
WHISKY, SUSPECTED, REPORT OF MICROSCOPIST ON ANALYSES OF:
Acetic ether:
Action of, when used as a medicine 63
Defined 63
Specific gravity of 63
Toxic dose of 63
Used for addition to poorer classes of wine, liqueurs, etc 63
Vapor density of 63
Alcohol and carbonic acid, theoretical yield of, from 100 parts of cane sugar (51 and 49 parts, respectively) 60
Alcohol contained in fermented wort is separated by distiller from foreign matter associated with it 62
Alcohol, different varieties of 62
Alcohol not a simple homogeneous substance 62
Alcohols, higher and artificial bouquets, toxic effects of, on animals 64
Aldehyde:
Defined 63
Effects of inhalation of vapors of, in large quantities 63
Is miscible with water, and soluble in alcohol and ether 63
Toxic dose of 63
Amyl alcohol:
Common name for 64
Description of 64
Effect of inhalation of vapors of 64
Effect of, when used in small doses 64

Page.

WHISKY, SUSPECTED, REPORT OF MICROSCOPIST ON ANALYSES OF—Continued.
Amyl alcohol—Continued.
Fermentation, description of ... 64
Proportion of, in different kinds of whisky ... 64
Toxic dose of ... 64
Two modifications of ... 64
Where found ... 64
Why so called ... 64
Beer yeast plant, name of species constituting ... 61
Butyl alcohol:
Description of ... 63
Discovered in 1852 ... 63
Properties of ... 63
Toxic dose of ... 63, 64
Where found ... 63
Distillation, products of, divided into three classes ... 62
Distillation, products of first class of, have low boiling points ... 63
Distillation, products of, table showing boiling points of ... 62
Distillation, tails or faints of, description of ... 63
Distilled liquors, maximum amount of alcohol capable of being produced, sought in manufacture of ... 60
Ethyl alcohol, properties of, described in Commissioner's report for 1888 ... 63
Fermentation, alcoholic or spirituous, described ... 60
Fermentation defined ... 60
Ferments are living, minute vegetable cells ... 60
Ferments, different varieties of ... 60
Malt and distilled liquors, object in manufacture of, to convert starch of the grain into alcohol ... 60
Malt liquors, low percentage of alcohol sought in manufacture of ... 60
Materials from which alcohol can be produced by fermentation arranged in three groups ... 60
Methyl alcohol, properties of, described in Commissioner's report for 1888 ... 63
New whiskies artificially colored, so that they may be marketed as soon as possible ... 60
Oak, well-seasoned:
Experiments with cologne alcohol of 93 per cent. to ascertain the quantity of extractive matter that could be obtained from ... 65
Experiments with proof spirits to ascertain the quantity of extractive matter that could be obtained from ... 66
Organisms, living, harmful, forming true ferments of disease, are found everywhere in the air ... 61
Propyl alcohol:
Chiefly used in scientific research ... 63
Discovered in 1853 ... 63
Properties of ... 63
Toxic dose of ... 63
Saccharomyces cerevisiæ, bottom, two varieties of, cultivated by Professor Hansen near Copenhagen, which give different results ... 61
Saccharomyces cerevisiæ, characteristics obtained by cultivation of different varieties of, can be maintained, through many successive fermentations ... 62
Saccharomyces cerevisiæ, cultivation of, on commercial scale, how to be conducted ... 62
Saccharomyces cerevisiæ, different results obtained from cultivation of several species of ... 61, 62
Saccharomyces cerevisiæ, two varieties of, extensively cultivated, one used at a high, the other at a low, temperature ... 61
"Spirits" of commerce and all kinds of spirits, composition of ... 64
Spirits, raw, deleterious effects of, to what attributable ... 64
Spirits, raw, how changed to a topaz color ... 65
Standard by which samples of suspected whisky can be judged, how established ... 60
Valerianic ether, description of ... 64
Whisky, cheap, manufacture of ... 64, 65
Whisky, table showing analyses of, made by microscopist ... 67
Wort a proper soil for harmful as well as true ferments ... 61
Yeast, large number of varieties and species of ... 60, 61
Yeast plant can be cultivated ... 61
Yeast plant, cultivation, "pure," of, carried on in breweries in Denmark, Germany, and elsewhere in Europe ... 61
Yeast plants and germs very minute in size ... 61
Yeast, pure, experiments on, are being carried on at Burton-on-Trent in England with different species of ... 61
Yeasts, germs of, float in the air and when they find a favorable soil grow and multiply like other plants ... 61
Yeasts resemble each other in form, but differ in properties and character ... 61
Yeasts, spontaneous, several species of, set up alcoholic fermentation in the wort, but some yield bad product ... 61
WORK PERFORMED IN THE SEVERAL DIVISIONS IN THE OFFICE OF THE COMMISSIONER:
By Division of Law ... 17, 18
By Division of Distilled Spirits ... 18
By Division of Tobacco ... 18
By Division of Stamps ... 18, 19
By Division of Assessments ... 19
By Division of Accounts ... 19
By Division of Revenue Agents ... 19
By Division of Appointments, Records, and Files ... 20

TABLES.

Page.
Titles of, for fiscal year 1889 and years previous ... 219

TABLE A.

Receipts from each specific source of internal revenue and the amounts refunded in each collection district, State, and Territory ... 220-257
Spirits, by collection districts ... 220-223
Spirits distilled from apples, peaches, or grapes ... 220, 222
materials other than apples, peaches, or grapes ... 220, 222
Rectifiers ... 220, 222
Wine made in imitation of champagne, and liquors produced by being rectified, etc., in pint bottles ... 220, 222
Wine made in imitation of champagne, and liquors produced by being rectified, etc., in quart bottles ... 221, 223
Wine made in imitation of champagne, and liquors produced by being rectified, etc., in larger quantities of such merchandise, however put up or whatever may be the package ... 221, 223
Dealers, retail liquor ... 221, 223
wholesale liquor ... 221, 223
Manufacturers of stills ... 221, 223
Stills or worms for distilling, manufactured ... 221, 223
Stamps for distilled spirits intended for export ... 221, 223
Total collections on spirits ... 221, 223
Tobacco, by collection districts ... 224-227
Cigars and cheroots of all descriptions, domestic or imported ... 224, 226
Cigarettes, domestic or imported, weighing not over 3 pounds per thousand ... 224, 226
over 3 pounds per thousand ... 224, 226
Manufacturers of cigars ... 224, 226
Snuff of all descriptions, domestic or imported, and snuff-flour sold or removed for use. 224, 226
Tobacco, chewing and smoking, fine-cut, cavendish, plug, or twist, etc., twisted by hand, etc., fine-cut shorts and refuse scraps, clippings, cuttings, and sweepings of tobacco, domestic or imported ... 224, 226
Dealers in leaf tobacco ... 225, 227
Dealers in leaf tobacco, not exceeding 25,000 pounds ... 225, 227
Retail dealers in leaf tobacco, annual sales not over $500 ... 225, 227
monthly sales in excess of rate of $500 per annum ... 225, 227
Dealers in manufactured tobacco ... 225, 227
Manufacturers of tobacco ... 225, 227
Peddlers of tobacco, when traveling with more than two horses, mules, or other animals. 225, 227
two horses, mules, or other animals ... 225, 227
one horse, mule, or other animal ... 225, 227
on foot or by public conveyance ... 225, 227
Total collections on tobacco ... 225, 227
Fermented liquors, by collection districts ... 228, 230
Fermented liquors, tax of $1 per barrel on ... 228, 230
Brewers, annual manufacture less than 500 barrels ... 228, 230
500 barrels or more ... 228, 230
Retail dealers in malt liquors ... 228, 230
Wholesale dealers in malt liquors ... 228, 230
Total collections on fermented liquors ... 228, 230
Oleomargarine, by collection districts ... 229, 231
Oleomargarine, domestic ... 229, 231
Oleomargarine, imported from foreign countries ... 229, 231
Manufacturers of oleomargarine ... 229, 231
Manufacturers of oleomargarine commencing business subsequent to the 30th day of June in any year ... 229, 231
Retail dealers in oleomargarine ... 229, 231
Wholesale dealers in oleomargarine ... 229, 231
Total collections on oleomargarine ... 229, 231
Banks and bankers, by collection districts ... 232, 234
Bank circulation ... 232, 234
exceeding 90 per cent. of capital ... 232, 234
Banks, bankers, and other parties liable, on amount of notes of any person, State bank, or State banking association, or of any town, city, or municipal corporation, paid out by them ... 232, 234
Total collections on banks and bankers ... 232, 234
Collections not otherwise herein provided for, by collection districts ... 232, 234
Total collections not otherwise herein provided for ... 232, 234
Penalties, etc., by collection districts ... 233, 235
Unassessed penalties ... 233, 235
Penalties upon unstamped instruments ... 233, 235
United States' share of penalties recovered by suits ... 233, 235
Penalties received on compromises ... 233, 235
Interest ... 233, 235
Costs ... 233, 235
Total of penalties, etc., collected ... 233, 235
Recapitulation of receipts from each general source of internal revenue and the amounts refunded in each collection district ... 236-243
Spirits ... 236, 237
Tobacco ... 236, 237
Fermented liquors ... 238, 239
Oleomargarine ... 238, 239
Banks and bankers ... 240, 241
Collections not otherwise herein provided for ... 240, 241
Penalties, etc ... 242, 243
Aggregate receipts ... 242, 243

INDEX.

Receipts from each specific source of internal revenue, by States and Territori
Spirits, by States and Territories
Spirits distilled from apples, peaches, or grapes
materials, other than apples, peaches, or grapes
Rectifiers
Wine made in imitation of champagne, and liquors produced by being rec
pint bottles
Wine made in imitation of champagne, and liquors produced by being rec
quart bottles
Wine made in imitation of champagne, and liquors produced by being rec
larger quantities of such merchandise, however put up or whatever
package
Dealers, retail liquor
wholesale liquor
Manufacturers of stills
Stills, or worms for distilling, manufactured
Stamps for distilled spirits intended for export
Total collections on spirits
Tobacco, by States and Territories
Cigars and cheroots of all descriptions, domestic or imported
Cigarettes, domestic or imported, weighing not over 3 pounds per thousan
over 3 pounds per thousand
Manufacturers of cigars
Snuff of all descriptions, domestic or imported, and snuff flour, sold or rem
Tobacco, chewing and smoking, fine-cut, cavendish, plug or twist, etc., twi
etc., fine-cut shorts and refuse scraps, clippings, cuttings, and sweepin
domestic or imported
Dealers in leaf tobacco
Dealers in leaf tobacco not exceeding 25,000 pounds
Retail dealers in leaf tobacco, annual sales not over $500
monthly sales in excess of rate of $500 per an
Dealers in manufactured tobacco
Manufacturers of tobacco
Peddlers of tobacco, when traveling with more than two horses, mules, or c
two horses, mules, or other anima
one horse, mule, or other animal
on foot or by public conveyance
Total collections on tobacco
Fermented liquors, by States and Territories
Fermented liquors, tax of $1 per barrel on
Brewers, annual manufacture less than 500 barrels
500 barrels or more
Retail dealers in malt liquors
Wholesale dealers in malt liquors
Total collections on fermented liquors
Oleomargarine, by States and Territories
Oleomargarine, domestic
Oleomargarine, imported from foreign countries
Manufacturers of oleomargarine
Manufacturers of oleomargarine commencing business subsequent to th
June in any year
Retail dealers in oleomargarine
Wholesale dealers in oleomargarine
Total collections on oleomargarine
Banks and bankers, by States and Territories
Bank circulation
exceeding 90 per cent. of capital
Banks, bankers, and other parties liable on amount of notes of any person
or State banking association, or of any town, city, or municipal corpora
by them
Total collections on banks and bankers
Collections not otherwise herein provided for, by States and Territories
Total collections not otherwise herein provided for
Penalties, etc., by States and Territories
Unassessed penalties
Penalties upon unstamped instruments
United States' share of penalties recovered by suits
Penalties received on compromises
Interest
Costs
Total of penalties, etc., collected
Recapitulation of receipts from each general source of internal revenue, and th
funded in each State and Territory
Spirits
Tobacco
Fermented liquors
Oleomargarine
Banks and bankers
Collections not otherwise herein provided for
Penalties, etc
Aggregate receipts

TABLE B.

Number and value of stamps for fermented liquors and number of brewers' p
to collectors of internal revenue during the fiscal year ended June 30,
Number, kind, and value of special-tax stamps issued to collectors of internal
ing the fiscal year ended June 30, 1889

Page.
Number and value of stamps for oleomargarine issued to collectors of internal revenue during the fiscal year ended June 30, 1889 ..... 258, 259
Number and value of stamps for distilled spirits issued to collectors of internal revenue during the fiscal year ended June 30, 1889 260-263
Number and value of stamps for tobacco, snuff, cigars, and cigarettes issued to collectors of internal revenue during the fiscal year ended June 30, 1889 ..... 264, 265
Number and value of internal-revenue adhesive stamps ordered monthly from the office of the Commissioner of Internal Revenue during the fiscal year ended June 30, 1889 266
Monthly receipts from the sale of internal-revenue adhesive stamps during the fiscal year ended June 30, 1889 267

TABLE C.

Comparative table showing the percentages of receipts from the several general sources of internal revenue now taxable, including penalties, in each State and Territory of the United States, to the aggregate receipts from the same sources, by fiscal years, from July 1, 1863, to June 30, 1889 268-281
Percentages of collections on spirits 268-270
tobacco 271-273
fermented liquors 273-276
oleomargarine 276
on penalties, etc., collected 276-279
of aggregate receipts 279-281

TABLE D.

Comparative statement showing the aggregate receipts of internal revenue in each collection district, State, and Territory of the United States, by fiscal years, from September 1, 1862, to June 30, 1889 282-323
Appendix No. 1, showing the differences between the internal-revenue collections in the districts, States, Territories, and years named, as reported by collectors and published in the several annual reports of the Commissioner, and the true collections 324-331
Appendix No. 2, showing, by collection districts, States, and Territories, the aggregate amount of internal-revenue returned directly to the office of the Commissioner by banks, insurance, railroad, canal, and turnpike companies, from September 1, 1862, to June 30, 1867 332-335

TABLE E.

Table showing the receipts from specific and general sources of internal revenue, by fiscal years, from September 1, 1862, to June 30, 1889 336-347

TABLE F.

Table exhibiting the percentages of receipts from specific and general sources of internal revenue to the aggregate receipts of the same, by fiscal years, from July 1, 1863, to June 30, 1889 348-355

TABLE G.

Table showing the returns of distilled spirits, fermented liquors, manufactured tobacco, snuff, cigars, cheroots, and cigarettes, under the several acts of legislation, and by fiscal years, from September 1, 1862, to June 30, 1889; also statement of the production of distilled spirits and fermented liquors in the several States and Territories, by fiscal years, from July 1, 1877, to June 30, 1889 356-369
Manufactured tobacco and snuff 356, 357
Cigars, cheroots, and cigarettes 358-360
Distilled spirits 361-363
Fermented liquors 364, 365
Production of distilled spirits, by States and Territories 366, 367
Production of fermented liquors, by States and Territories 368, 369

TABLE H.

Statement showing the internal-revenue receipts from special taxes in the several States and Territories for the special-tax year ended April 30, 1889 ..... 370, 371
Aggregate for special-tax year 1888 ..... 370, 371

TABLE I.

Abstracts of reports of United States district attorneys, marshals, and others, of suits and prosecutions under the internal-revenue laws during the fiscal year ended June 30, 1889 372-376
Aggregate for fiscal year 1888 372-376

TABLE K.

Abstract of seizures of property for violation of internal-revenue laws for the fiscal year ended June 30, 1889 377
Aggregate for fiscal year 1888 377

TABLE L.

Statement of collections, expenses, and percentage of cost of collection for each district during the fiscal year ended June 30, 1889 ..... 378, 379

O

51ST CONGRESS, 1st Session. } HOUSE OF REPRESENTATIVES. { E

ANNUAL REPORT

OF THE

ATTORNEY-GENERAL

OF THE

UNITED STATES

FOR

THE YEAR 1889.

WASHINGTON:
GOVERNMENT PRINTING OFFICE.
1889.

REPORT

OF

THE ATTORNEY-GENERAL.

DEPARTMENT OF JUSTICE,
Washington, D. C., December 2, 1889.

To the Senate and House of Representatives of the United States in Congress assembled:

Complying with the law, I respectfully submit the following report of the business of the Department of Justice during the fiscal year ending June 30, 1889, with statistics of crime against the United States, and a statement of the appropriations under the control of the Attorney-General.

BUSINESS OF THE SUPREME COURT.

The docket of the Supreme Court of the United States at the close of the last term, as compared with its condition at the close of the term next preceding, shows an increase of 133 cases undisposed of, appellate and original.

At the close of the October term, 1887, there remained undisposed of on the appellate docket 1,013 cases, and on the original 2 cases. The number of cases docketed at the October term, 1888, was 556, of which 550 were on the appellate and 6 on the original docket, making the total number of cases on the docket at that term, 1,571, of which 1,563 were on the appellate and 8 on the orginal docket. Of this number, 423 were disposed of, and of these, 417 were on the appellate, and 6 on the original docket.

The number of cases actually considered by the court was 289, of which 188 were argued orally, and 101 submitted on printed arguments.

Of the 417 appellate cases disposed of, 147 were affirmed, 95 reversed, 96 dismissed, 76 settled by the parties and dismissed, and in 3 cases questions certified to the court were answered.

The number of cases decided at this term, (October term, 1888) in which the United States was concerned was 53, of which 24 were decided in favor of and 25 against the United States, and in 4 criminal cases questions certified were answered.

Of those in which the United States appealed, 18 were affirmed, 12 reversed, and 2 dismissed. Fifteen of the cases were appeals from the Court of Claims, in 11 of which the judgment was affirmed and in 4 reversed. Besides the cases in which the United States was concerned that were decided, there were 2 others dismissed by the court, and of these 1 was dismissed at the instance of the United States and 1 at the instance of the other side.

Thus the total number of cases disposed of at the October term, 1888, in which the United States was interested, was 55. The above does not include 1 case on the appellate docket from the Court of Claims, in which the District of Columbia was a party.

BUSINESS OF THE COURT OF CLAIMS.

Since the last report 309 suits, claiming upward of $2,000,000, have been brought, under the ordinary jurisdiction of the court.

The total number of such cases now pending is 1,187, claiming upward of $20,500,000.

Under the act of March 3, 1883, known as the Bowman Act, there have been transmitted to the court to date 7,232 cases. The amount claimed can not be stated, but involves a very large sum.

During the last term 279 cases, claiming about $1,488,752.49, were acted on by the court and have been or will be reported to Congress. Of this number 161 cases, claiming $780,796.04, were dismissed.

In 118 cases, claiming $707,956.45, findings favorable to claimants were filed by the court, so far as is shown by the findings, for $105,600.10.

There are now pending 6,417 cases, involving, so far as can be ascertained from the petitions and other papers received, upward of $350,000,000.

Under the same act there have been transmitted by heads of Departments, to date, 36 cases.

Four of these cases were acted on by the court during the term, and the findings and opinion of the court certified to the Department transmitting the claim.

There are now pending 6 cases in which the court is asked to pass upon certain disputed questions, the determination of which will settle claims involving large amounts.

CLAIMS AGAINST THE UNITED STATES.

There were brought to trial 191 suits, claiming $2,304,271.98. In 35 of these, claiming $565,189.53, judgment was for defendant.

In 156 cases, claiming $1,739,082.45, judgment was for claimants for $1,421,156.71.

Nine cases, claiming $5,573.08, were dismissed, on defendant's motion, for want of prosecution. Five cases, claiming $157,595.05, were dismissed on claimants' motion, and one case, claiming $144, was discontinued.

CLAIMS AGAINST THE DISTRICT OF COLUMBIA.

Of these, there were brought to trial five suits, claiming $50,064.74, and judgment was rendered in them in favor of claimants for $53,468.34.

There are now pending 28 cases, claiming upward of $1,358,960.

Whole number of cases disposed of	211
Amount claimed in them	$2,517,648.85
For defendants, 50 cases, claiming	$728,501.66
For claimants 161 cases, claiming	$1,789,147.19
Amount recovered by claimants therein	$1,454,625.15

CLAIMS UNDER THE "BOWMAN ACT."

Congressional cases:	
Number of cases brought to trial	279
Amount claimed in them	$1,488,752.49
Number of cases dismissed on loyalty	154
Amount claimed in them	$658,784.04
Number of cases dismissed for other causes than loyalty	7
Amount claimed in them	$122,012.00
Number of cases in which court filed findings	118
Amount claimed in them	$707,956.45
For claimants, so far as shown by the findings	$105,600.10
Departmental cases:	
Number of cases brought to trial	4

FRENCH SPOLIATION CASES.

Five thousand five hundred and sixty-nine petitions, representing 2,386 vessels and about $30,000,000, have been filed in the Court of Claims under the act of January 20, 1885, commonly known as the French Spoliation Act.

Of these cases, each petition being treated as a case, 155 have been dismissed on claimants' motions, and the court has reported to Congress, with findings favorable to claimants, 276 other cases, amounting to $1,651,439.05. It has also reported 30 cases adversely to claimants, and has decided 12 other cases, in whole or in part, adversely to claimants, but has not yet reported its conclusions and findings to Congress in them, for the reason that they have been placed on the new trial docket for the term 1889-'90.

Twenty-eight other cases, heretofore argued, have been remanded for re-argument and they are now on the docket.

In addition to these there are 101 cases on the trial docket for the present term.

The average amount of the findings in the above 276 cases is $5,983.47. If the same average shall be applied to the 155 cases dismissed by claimants, and the 30 cases reported to Congress adversely to them, making 185 in all, they would aggregate $1,106,941.95. As the cases last named have not been passed upon by the court, there is no criterion by which the actual amount involved in them can be arrived at; hence this average to approximate the amount.

Experience has shown from the trials and findings in this class of

cases, that the findings for claimants have fallen far below the amounts claimed, from which it may reasonably be concluded that the estimate of $30,000,000 will exceed the amount for which the Government may be ultimately found liable.

PROCEEDINGS UNDER THE ACT GIVING CIRCUIT AND DISTRICT COURTS OF THE UNITED STATES CONCURRENT JURISDICTION WITH THE COURT OF CLAIMS.

Under the provisions of section 6 of the act approved March 3, 1887, (Forty-ninth Congress, second session, chapter 359) copies of petitions in suits for settlement of claims in the circuit and district courts of the United States have been received in this office in 797 cases, which may be classified as follows:

For fees of United States attorneys	3
For fees of clerks of United States courts	19
For fees of United States marshals	7
For fees of United States commissioners	56
For fees of United States deputy surveyors	7
For fees of United States supervisors and deputy marshals at elections	631
For pay of night engineer at post-office in Omaha	1
For fees of United States consuls	2
For refund of penalty under revenue laws	2
For repairs on revenue steamer	1
For work on public building, Governor's Island	1
For compensation as interpreter to United States legation in China	1
For certain donated indemnity land	1
For services to United States prisoners as physician	1
For supplies seized	4
For services as stenographer in United States cases	1
For witness fees	6
For fees as shipping commissioner	1
For use of property for Hawkin's Point light-house	1
For judgment of French-American Commission	1
For services as messenger	1
For funds confiscated in Indian outbreak	1
For issuance of land patents	24
For contract for public buildings	3
For proceeds of sale of bark *Teresita*	1
For damage to riparian rights	1
For land used as dock	1
For value of land	1
For use and repair of barge	1
For duties illegally exacted	1
For value of chandelier	1
For fees of chief supervisors at elections	5
For express service	1
For judgment paid in suit wherein plaintiff acted for United States	1
For rental of office	1
For fees of United States surveyor	1
For rental of post-office	1
For balance of salary due deputy collector of port of New York	1
For contract for constructing Kempe Levee	1
For services as stone-cutter	1
For contract with the Indian Bureau to furnish beef	1

In all these cases the petitions have been referred to the several Departments, before which the matters would ordinarily be brought for examination, with a request that this Department be advised, for the instruction of the defending district attorneys, of any matters of counter-claim, set-off, or defense within the knowledge of the officers of those Departments. Such replies as have been received to these requests have been furnished to the several district attorneys. Such requests for advice in the preparation of defenses as have been received from district attorneys have been or will be promptly complied with. Some of these cases have been heard since the last report, and, where I have deemed it necessary, appeals have been directed to be taken to the Supreme Court. Three cases so appealed from the circuit court for the district of Oregon have been determined, the Supreme Court reversing the decrees of the court below.

Many of the cases brought under this jurisdiction are class cases, so that the determination by the court of final resort disposes of a large number at one time.

In accordance with this act, the Attorney-General, on February 21, 1889, certified to Congress the judgments pending at that date and which had not been appealed, 19 in number, amounting to $16,304.88. Congress failed to appropriate for the same.

EXHIBITS ACCOMPANYING THIS REPORT.

Exhibit A is a statement of the civil suits, to which the United States was a party, terminated in the circuit and district courts of the United States during the fiscal year ending June 30, 1889, and of such suits pending in said courts July 1, 1889, as reported by the district attorneys.

During the last fiscal year 2,287 civil suits were terminated: In 934 of these judgments were for the United States; in 531 against the United States; and 738 were either *nolle prosequied*, dismissed, or discontinued; 62 were appealed from the district to the circuit court, and 22 from the circuit to the Supreme Court. Many of the civil suits reported *nolle prosequied*, dismissed, or discontinued, were settled by authority of the Treasury Department, and discontinued under its direction. There were pending July 1, 1889, 2,950 civil suits to which the United States was a party.

Exhibit B is a statement of the criminal prosecutions terminated in the circuit and district courts of the United States during the last fiscal year, and of such prosecutions pending July 1, 1889.

There were terminated during the last year 14,588 criminal prosecutions; 403 of these were prosecutions under the customs laws, in which there were 206 convictions, 101 acquittals, and 96 were entered *nol. pros.*, discontinued, or quashed; 5,648 under the internal revenue laws, in which there were 3,158 convictions, 926 acquittals, and 1,564 were

entered *nol. pros.*, discontinued, or quashed; 724 under post-office laws, in which there were 370 convictions, 110 acquittals, and 244 entered *nol. pros.*, discontinued, or quashed; 414 under election laws, in which there were 126 convictions, 74 acquittals, and 214 entered *nol. pros.*, discontinued, or quashed; 12 under the civil rights act, entered nol. pros., discontinued, or quashed; 380 under intercourse acts, in which there were 326 convictions, 8 acquittals, and 46 entered *nol. pros.*, discontinued, or quashed; 204 under the pension laws, in which there were 91 convictions, 27 acquittals, and 86 entered *nol. pros.*, discontinued, or quashed; 68 for embezzlement, in which there were 32 convictions, 22 acquittals, and 14 entered *nol. pros.*, discontinued, or quashed; 3 under the naturalization laws, in which there were 1 acquittal, and 2 entered *nol. pros.*, discontinued, or quashed; 6,732 miscellaneous prosecutions, in which there were 4,175 convictions, 1,187 acquittals, 1,370 entered *nol. pros.*, discontinued, or quashed.

In many of the prosecutions under the internal-revenue-laws entered *nol. pros.*, discontinued, or quashed, a compromise and settlement were made in the Internal Revenue Bureau of the Treasury Department.

There were pending July 1, 1889, 7,212 criminal prosecutions, viz: 103 for violation of customs laws, 2,874 for violation of internal-revenue laws, 488 for violation of post-office laws, 348 for violation of election laws, 68 under naturalization laws, 152 under the intercourse laws, 156 under pension laws, 6 under civil rights acts, 47 for embezzlement, 1 for violation of sections 1 and 3 interstate-commerce law, and 2,969 miscellaneous prosecutions.

Exhibit C shows the amount arising and realized from civil suits to which the United States was a party, and from criminal prosecutions in the circuit and district courts of the United States during the last fiscal year.

The aggregate amount of the judgments rendered in favor of the United States in civil suits during the last year was $629,132.96, and the amount actually collected on these judgments was $86,078.63, while $51,638.30 was obtained during the year on judgments rendered in former years for the United States, and $78,976.02 was otherwise realized in civil suits.

The aggregate amount of fines, forfeitures, and penalties imposed during the year in criminal prosecutions was $478,609.60, and the amount of these fines, forfeitures, and penalties collected during the year was $73,778.03, while $18,135.95 was realized on fines, forfeitures, and penalties imposed in former years.

Exhibit D is a statement of civil suits, to which the United States was not a party, commenced and terminated in the circuit and district courts of the United States during the last fiscal year, and of such suits, pending July 1, 1889, 9,173 were commenced during the year, of which 1,497 were cases in admiralty, and 7,676 were other miscellaneous suits.

Judgments for plaintiffs in these cases were as follows: 767 in ad-

miralty, amounting to $703,318.42, and 2,446 in other suits, amounting to $71,854,616.91.

Judgments for defendants were 115 in admiralty, amounting to $29,018.34, and 678 in other suits, amounting to $224,764.64; 584 in admiralty were either dismissed or discontinued, as were also 3,490 other suits; 38,872 civil suits, to which the United States was not a party, were pending in the circuit and district courts of the United States July 1, 1889, viz, 4,391 in admiralty, and 34,481 other miscellaneous suits.

Exhibit E is a general statement of all appropriations placed under the Department of Justice which were available, and those from which payments were made during the fiscal year ending June 30, 1889.

Exhibit F 1 is a statement of the court expenses incurred in the fiscal year 1887 and paid in the fiscal year 1889.

Exhibit F 2 is a statement of the court expenses incurred in the fiscal year 1888 and paid in the fiscal year 1889.

Exhibit F 3 is a statement of the court expenses incurred and paid in the fiscal year 1889, viz:

To United States marshals	$530,979.83
To attorneys	186,886.21
To assistant attorneys	100,222.71
To clerks	127,078.41
To jurors	624,788.20
To witnesses	912,638.50
To commissioners	70,668.85
To prisoners	344,186.11
To rents	46,610.35
To bailiffs	140,519.27
To miscellaneous expenses	144,995.46
To special deputies at elections	123,135.00
Amounting to	3,353,608.90

Exhibit F 4 is a statement showing items, amounts, cause of expenditure, and persons paid from the appropriation for prosecution of crimes.

Exhibit F 5 is a statement showing items, amounts, cause of expenditure, and persons paid from the appropriation for defending suits in claims against the United States.

Exhibit F 6 is a statement showing items, amounts, cause of expenditure, and persons paid from the appropriation for defending suits in claims against the District of Columbia.

Exhibit F 7 is a statement showing items, amounts, cause of expenditure, and persons paid from the appropriation for making defense in French Spoliation cases.

Exhibit F 8 is a statement showing items, amounts, cause of expenditure, and persons paid from the appropriation for repairs to court-house, District of Columbia.

Exhibit F 9 is a statement showing items, amounts, cause of expenditure, and persons paid from the appropriation for punishing violations of intercourse acts and frauds.

Exhibit F 10 is a statement showing items, amounts, cause of expenditure, and persons paid from the appropriation for support of convicts.

Exhibit F 11 is a statement showing items, amounts, cause of expenditure, and persons paid from the appropriation for contingent expenses, Department of Justice, including the appropriation for furniture and repairs, books for Department library, books for the office of the Solicitor, stationery, official transportation, and miscellaneous items.

Exhibit F 12 is a statement showing items, amounts, cause of expenditure, and persons paid from the appropriation for building, Department of Justice.

Exhibit G is a statement of payments made during the fiscal year 1889 to supervisors at Congressional elections.

Exhibit H shows the number of assistant attorneys, regular and special, and the compensation paid to each, as required by sections 195 and 385 of the Revised Statutes.

Exhibit I is the report of the Solicitor of the Treasury, showing the amount, character, and results of the litigation under his direction for the fiscal year ending June 30, 1889.

Exhibit K is the report of the Librarian of the Department.

Exhibit L is a detailed statement, giving the names of the penitentiaries where United States prisoners are confined, their location, and the number of convicts confined in each.

Exhibit M is the annual report of the President of the Board of Trustees of the Reform School for the fiscal year ending June 30, 1889.

Exhibit N is the annual report of the Warden of the United States jail in the District of Columbia.

Exhibit O is a report of the Architect of the Capitol upon the improvements and repairs to the court-house, District of Columbia, during the fiscal year ending June 30, 1889.

Exhibit P is a report of the Clerk of Pardons of the Department of Justice, showing the names of the persons convicted in the United States courts who were pardoned during the fiscal year ending June 30, 1889, the districts in which they were tried, the terms of court at which they were convicted, their offenses, sentences, dates of pardon, and the principal reasons for recommending executive clemency.

Exhibit Q is a letter and statement from the Marshal for the western district of Arkansas as to the expenses of the United States courts in that district.

UNITED STATES PRISONERS.

As has been the custom for a number of years, the usual examinations of the penitentiaries, prisons, and reformatories where United States prisoners are confined have been made, and every attention paid by the Department's agents to the care and treatment of the prisoners of the United States. The reports of the agents show the penitentiaries to be generally in good condition and the convicts humanely treated and well cared for.

UNITED STATES PENITENTIARY AND A UNITED STATES REFORMATORY.

I will not repeat what has been stated heretofore, but would respectfully call your attention to the several reports of my predecessors. With each year the need of Government penal institutions becomes more apparent. In the present situation of affairs the Department is compelled to rely upon the several State institutions for the care and maintenance of Government convicts. Owing to the agitation of the labor question, a number of States have passed laws prohibiting the employment of prisoners on contract labor. Congress, on February 23, 1887, passed an act prohibiting the employment of United States prisoners on contract labor. The result has been that many institutions throughout the country have been compelled to change their system of labor, and as a result have not been self-supporting. This, together with the fact that United States prisoners can no longer be employed on contract labor, has obliged the penitentiary authorities to charge the Government stated per diems for the subsistence of United States prisoners, whereas heretofore they were able to keep them without charge, the extra expense being but small, and the labor of the prisoners more than compensating for the cost.

Again, the legislatures in several States have enacted laws to the effect that no prisoners convicted outside of the State can be received in the several penal institutions of the State. In many of the districts of the United States there is no penitentiary suitable for the confinement of Government convicts, and the Attorney-General is compelled to make arrangements for their incarceration in prisons situated in other States and Territories. At the present time there is not a single institution in the country which will receive United States prisoners free of cost. The number of penitentiaries which will receive United States prisoners from outside the State at all is becoming limited, and in some cases the transfer of Government convicts from one penitentiary to another becomes necessary in view of the vacillating enactments of the legislatures in the several States. Should all the States in which suitable penitentiaries are located enact laws excluding United States prisoners, the Government will be compelled to hire quarters for its criminals, or to designate institutions which are in no way proper places for their confinement.

A large proportion of the prisoners of the United States are those who have committed but one offense against the laws of their country. Their lives theretofore have in a great many instances been exemplary. This one yielding to temptation has been the cause of their downfall. If such persons could be confined in an institution where contact with the criminal classes could be avoided, their reformation would often be speedy and complete, since their inclination in life is not towards crime. For the confinement of such prisoners, and especially for juveniles, in my opinion, a model United States reformatory should be built and conducted on the most approved plan.

The United States penitentiary should be provided for the reception of others than those who have committed their first offense. The number of this class is amply large to warrant the building of a good institution.

It seems to me that the United States should not be compelled to depend upon the several States for places in which to confine its prisoners.

PRISON BUREAU.

It is urged with much force that a prison bureau should be established in the Department of Justice, where could be gathered, collated, and recorded in a permanent form the criminal statistics of the United States. It is impossible at the present time to find any office or bureau where information concerning crime and criminals in this country can be obtained. The criminal statistics of the United States can not be compared with those of other nations. The advantages of such a bureau to the Government, State, county and municipal officers and the public generally, would be invaluable. This prison bureau could be made the central office of the Bertillon system of measurements for the identification of criminals. It is believed the several States and Territories would co-operate and heartily indorse such a plan, and it would undoubtedly meet with the favor of the wardens and superintendents of the several penitentiaries.

I earnestly urge an appropriation necessary to carry out the above recommendations.

STATISTICS.

During the year ending June 30, 1889, there were received in the different penitentiaries, reformatories, etc., throughout the United States 1,083 prisoners. The total number in custody during the year was 2,307. There were discharged during the year 1,055, and on the 30th day of June, 1889, there were still in confinement 1,252. Of the 1,055 discharged there were 944 by expiration of sentences, 38 died, 49 were pardoned, 19 released by writ of *habeas corpus*, and 5 transferred to the insane asylum.

Of the 1,083 prisoners received during the year 29 were committed for violation of the revenue laws, 146 for counterfeiting, 119 for violation of the postal laws, and 657 for other offenses; 621 were born in the

United States and 330 were foreign born; 951 were males and 132 were females; 601 claimed to be temperate and 350 admitted themselves to be intemperate; there were 734 whites, 163 blacks, 39 Indians, and 15 Chinese; 778 could read and write, 35 could read only, 138 could neither read nor write; 547 were married and 404 were single; 859 were in prison for the first time and 92 had heretofore served sentence; 118 were under 20 years of age when admitted, 275 between 20 and 30, 185 between 30 and 40, 157 between 40 and 50 and 216 over 50 years of age. Of the 1,252 prisoners in confinement on the 30th day of June, 1889, 220 were idle, 24 disabled or sick, 150 were working "on contract," 82 "on piece price," 421 "on State account," and 345 on prison duties.

Attached to my report (Exhibit L) is a detailed statement giving the names of the penitentiaries used by the Government during the past year, their locations, the names of the wardens, districts from which United States prisoners have been received during the past year, and detailed statistics of each institution, such as are referred to in the above general summary.

JAIL, DISTRICT OF COLUMBIA.

Your attention is invited to the following suggestions in relation to the United States jail in the District of Columbia:

A divided jurisdiction, such as at present exists, can not but render the management of the jail unsatisfactory. Action should be taken to place the entire control under some one authority, and as the Attorney-General is required to pass upon and approve all disbursements of funds, it would seem proper that the jail should be placed entirely under his supervision.

The need of a separate wing for female prisoners certainly commends itself as important. It is earnestly hoped that some action in this connection will be taken.

The building of a wall about the jail inclosure is greatly needed. As the jail stands at present it is open to the commons and easy of access to outsiders. An appropriation for this purpose should be made.

The removal of the small-pox hospital, which is now within the jail inclosure, should receive attention.

During the administration of my predecessor the salaries of the different officials employed at the jail, with the exception of the warden, were arranged upon an equitable basis. The compensation of the warden, which is fixed by an act of Congress, is too small for the duties of the office and responsibilities involved. In my opinion, the salary of the warden should be increased from $1,800 to $2,500 per annum.

The report of the warden is annexed hereto, marked Exhibit N.

THE NEAGLE-TERRY CASE.

Information was brought to the Attorney-General last spring that David S. Terry and Sarah Althea Terry, his wife, were possessed by a

very bitter feeling of hostility toward Mr. Justice Stephen J. Field of the Supreme Court, and Judge Lorenzo Sawyer of the circuit court of the ninth circuit; that this feeling of hostility had its origin in a decision made by these judges in the circuit court for the northern district of California in 1888, in a suit to which said Terrys were parties; that further litigation was still pending in that court to be passed upon during the summer circuit for 1889, and that there was great danger that violence would be attempted upon the persons of Mr. Justice Field and Judge Sawyer by the Terrys during said summer session.

So strong were these representations, and so convincing the evidence brought in their support, that I became satisfied unusual means should be provided for the protection of those judges. Accordingly I instructed the United States marshal for the northern district of California to furnish such protection. In pursuance of these instructions Marshal Franks directed Deputy Marshal David Neagle to attend upon the person of Mr. Justice Field, while in and about his circuit duties in California during the summer. The event proved the wisdom of these precautions.

On the morning of the 14th day of August, while at breakfast at the railroad eating house at Lathrop, on his way from Los Angeles, where he had been holding a session of the circuit court, to San Francisco, for the purpose of holding a session of the circuit court there, Mr. Justice Field was violently assaulted by David S. Terry, under such circumstances as evinced a purpose to revenge his fancied grievances, even at the expense of taking the life of Mr. Justice Field; and thereupon said Neagle, in the necessary defense of the life of Mr. Justice Field, shot and killed David S. Terry.

Proceedings were commenced, on account of this homicide, against Mr. Justice Field and Deputy Marshal Neagle with a view to their trial in the State courts of California. These proceedings, so far as Mr. Justice Field was concerned, were soon abandoned, but were prosecuted against the deputy marshal until he was released from the custody of the State officer upon a writ of *habeas corpus* issued out of the circuit court of the United States for the northern district of California. From the judgment of that court discharging him from the custody of the sheriff, the State of California has appealed, and such appeal is now pending in the Supreme Court of the United States. The question at issue is, whether the circuit court was authorized to discharge the deputy marshal from arrest, under State law, for that homicide, or whether, as the State contends, the jurisdiction of the State court in the premises is exclusive.

LAWLESSNESS.

Very soon after the 4th of March last, it was brought to my attention that, at the then recent Congressional elections, there were very numerous and far-reaching violations of the Federal laws relating to

such elections. It was charged that, by intimidation of voters, by seizing and destroying ballot-boxes, by substitution of false ballots, by false returns, by bribery of voters and election officers, and by various other means well known to those engaged in this nefarious business, the popular will was stifled and falsified and returns obtained wholly at variance with what would have been the result of a free and fair vote honestly counted. In every case where such charges were brought to the attention of this Department, instructions were given to the district attorneys to investigate and prosecute to the utmost of their power, every person implicated in such violations of Federal laws, and I am happy to be able to report that in a number of Districts such prosecutions have been successful.

A large number of indictments have been returned; upon some of them trials have been had; in a number of cases convictions have been obtained, and in some instances the culprits have pleaded guilty and asked for mercy at the hands of the court. A large number of these cases are still pending, and the instructions to the district attorneys are still to push them to the end. It is proper to say that in some cases efforts have been made, some of them very recently, to prevent and cripple these prosecutions by attempts to intimidate the marshal from serving process, and witnesses from giving their testimony; such intimidation going to the extent of actual assassination.

But it must not be supposed that hostility to the United States courts and United States officers is confined to election matters. On the contrary, the records of the Department of Justice show that in some districts civil actions in these courts and criminal prosecutions wholly disconnected with the elective franchise, can not proceed, because the lives of necessary witnesses are in such danger, that it would be simply inhuman to enforce their attendance and the giving of their testimony; while the evidence is abundant, that, in certain localities no occupation is so dangerous as a faithful performance of duty by United States marshals. Of course, such lawlessness can not be tolerated. In every case the instructions to prosecute have been coupled with the assurance, that, no means within the power of this Department will be spared to protect officers and witnesses in the discharge of their duties, and to bring to punishment every man who illegally attempts to thwart such prosecutions.

THE BELL TELEPHONE CASE.

Since the last report of the Attorney-General the suit of the United States against the American Bell Telephone Company, to cancel patents, numbers 174465 and 186787, has been vigorously prosecuted. The Telephone Company demurred to the bill pending in the circuit court of the United States for the district of Massachusetts, upon the ground "that no power or authority in law exists in any person or party or any

court to bring said suit, nor to entertain the same, nor to give any relief thereunder, or touching the subject-matter thereof."

This demurrer was sustained in the circuit court, but, upon appeal to the Supreme Court of the United States, that decision, on the 12th day of November, 1888, was reversed. Such proceedings were thereupon had in the circuit court, Alexander Graham Bell having in the meantime been made a party, that early last summer the suit was at issue and an examiner appointed to take testimony. Afterward the Telephone Company applied to the circuit court for leave to withdraw its answer, and to file an amended answer. Leave was granted by the court over the objections of the Government counsel, and on the 5th day of October, 1889, the plea and answer were filed by the company. To this a general replication has been filed, and the case is again ready for the taking of testimony.

MORMON CHURCH RECEIVERSHIP.

The proceedings commenced under the act of March 3, 1887 (24 Statutes at Large, page 635), requiring the Attorney-General to institute suits to forfeit property in Utah illegally held, and to close up and settle the affairs of the Mormon Church and the Perpetual Emigration Fund Company, resulted in a decree in favor of the Government, which now awaits the decision of the Supreme Court of the United States, upon an appeal from the supreme court of the Territory of Utah. The appeal was argued at the last term, and is under advisement.

POTOMAC FLATS LITIGATION.

The suit for the settlement of the title to the Potomac flats has been pushed forward as rapidly as practicable during the past year. The evidence has been largely taken, and I am advised by the special counsel in charge of the case that it will be ready for hearing at the next general term of the supreme court of the District.

OTHER SUITS BROUGHT IN COMPLIANCE WITH ACTS OF CONGRESS.

Acts were passed by the last Congress requiring proceedings to be commenced by the Attorney-General in a number of cases for the settlement of the rights of the United States.

First. An act of Congress of August 7, 1888 (25 Statutes at Large, page 382), requires all telegraph lines subsidized by the Government, by and through their own respective corporate officers and employés, to maintain and operate for railroad, governmental, commercial, and all other purposes such telegraph lines; and, also, requires the Attorney-General, by proper proceedings, to prevent any unlawful interference with the rights and equities of the United States in relation to such telegraph lines.

In pursuance of these requirements a suit has been commenced in the circuit court of the United States for the district of Nebraska, against

the Union Pacific Railway Company and the Western Union Telegraph Company, for the determination of the questions involved and the enforcement of the rights of the United States. Other suits, doubtless, will be necessary, but this has been brought first as a test suit.

Second. Proceedings have also been commenced in pursuance of the act of March 1, 1889 (25 Statutes at Large, page 768), for the settlement of the titles to lands claimed by and under the Black Bob band of Shawnee Indians in Kansas.

Third. In pursuance of the act of March 2, 1889 (25 Statutes at Large, page 850), proceedings have been commenced in the United States circuit court for the State of Oregon for the forfeiture of wagon-road land grants, referred to in said resolution.

In addition to the foregoing, suits have been commenced on the request of the Department of the Interior to recover a very large amount of lands alleged to have been improperly patented to the State of Iowa for the use of the Sioux City and St. Paul Railroad Company in the State of Iowa; also, to recover lands alleged to have been improperly patented to the same State for the use of the Des Moines River Navigation Company.

All of said proceedings are being pushed forward as rapidly as practicable.

ASSISTANT ATTORNEY-GENERAL FOR DEPARTMENT OF AGRICULTURE.

An estimate has been made for the pay of an Assistant Attorney-General for the Department of Agriculture. The necessity of this need not be argued. That Department has continual and urgent need for such an officer; not only for counsel in the ordinary routine matters of the Department, but also because it is continually brought face to face with questions of law, and is often drawn into litigation, in its efforts to restrict and stamp out contagious diseases affecting agricultural interests all over the country.

ADDITIONAL ASSISTANT ATTORNEY-GENERAL IN DEPARTMENT OF JUSTICE.

I have also recommended the appointment and made an estimate for the compensation of an additional Assistant Attorney-General, to be located in this Department. Since the working force of the Department was organized the business has grown to such magnitude, and the current business, both in the courts and in the Department, has been so enlarged that the Attorney-General, the Solicitor-General, and one Assistant Attorney-General, all the force available for the general legal business of the Department outside of the Court of Claims, are inadequate to the work in hand. The result is that the other Departments are often greatly delayed in obtaining opinions upon questions of law to which they are entitled, and which ought to be rendered promptly.

Moreover, crowded as these officers are, no sufficient attention can be given to the vast litigated interests of the Government pending in the Territorial, district, circuit, and supreme courts.

UNITED STATES ATTORNEY, ARIZONA.

The United States attorney for the Territory of Arizona urges, and it seems to me with good reason, that whereas the United States attorney of each of the other Territories is allowed to make a maximum of $6,000 in the way of fees, he is limited to $3,500. The expense of living and traveling, and the difficulties and responsibilities of the work to be performed by the attorney for Arizona, are not less than in any of the other Territories. I ask that he be put upon an equality with the other United States attorneys.

ASSISTANT ATTORNEYS IN THE DISTRICT OF COLUMBIA.

The law under which provision is made for assistant district attorneys in the District of Columbia was passed in 1870, and allows only four thousand dollars for the pay of such assistants. Since the enactment of that law the business within the District has increased to such an extent that the force available with such an appropriation is entirely inadequate. Aside from the growth of the District in population, and the consequent increase of criminal business, there is a large amount of civil business, in settling titles to property, defending suits brought against various officers of the Government, and otherwise, for which provision ought to be made, and which can in no way so well be attended to as by assistant attorneys under the general direction of the district attorney and the Attorney-General. The appropriation for this purpose ought to be at least $8,000, instead of $4,000; and, unless such provision is made, the civil business of the Government in the District of Columbia can not receive that attention which its importance demands.

REORGANIZATION OF THE JUDICIARY.

The importance of some change in the judicial system of the United States, which will enable the courts, and especially the Supreme Court, to dispose of the large number of cases now accumulated, and decide current cases as they shall come upon the dockets, can hardly be exaggerated. I am aware that there is among judges and lawyers, as well as laymen, great diversity of opinion as to the manner in which this end shall be accomplished. Numerous plans have been suggested, some formulated into bills which have received the consideration of one or both branches of Congress; and it would, perhaps, be presumptuous in me to urge one or another of these plans as the best. I may, however, safely and properly urge that Congress shall address itself to this subject, with a determination to find a remedy for the crying evil of delay in the administration of justice in some of the circuit courts, and in the

Supreme Court; an evil which amounts practically to a denial of justice in a large number of cases.

Without entering into details as to any plan in this matter, I simply suggest, as an illustration of the urgency of doing something, that the eighth circuit, including the two new States of Dakota, consists of nine States, embracing twelve districts and twenty-five divisions. It is, of course, unnecessary to say that no circuit judge can hold the circuit courts as contemplated by the present system in all of these districts. The condition of things in the Supreme Court is still worse, and that court is getting every year further in arrears. The docket of the Supreme Court at the end of 1887 showed an increase of sixty-seven cases during the year, and for 1888 an increase of one hundred and thirty-three cases during the year. In other words the increase was twice as great in the last year as in the one next preceding; and the present state of the business indicates that the proportionate increase of the business will be still greater in the current year. Without further dwelling on this matter, I call special attention to the recommendations upon this subject of my predecessor in each one of his annual reports, and especially to the report of 1885, where he set out in full what was known as the Davis bill.

RESTORATION OF RECORDS.

I also call the attention of Congress to the recommendations found on page XIII of the Report of the Attorney-General for 1888 in reference to the necessity for the restoration and care of the records of the United States courts, and urge that an appropriation be made as therein suggested.

PAY OF ASSISTANT ATTORNEYS AND CHIEF CLERK.

I also concur in the recommendation found on page XIX of the last report of my predecessor for an increase of the compensation of the assistant attorneys and chief clerk in this Department. For the reasons for these changes I refer to that report.

DISPUTED CLAIMS FOR MONEY DUE FROM THE GOVERNMENT.

Many questions are presented for opinions by the various Departments, which arise out of disputes in regard to the right of various claimants to receive money admitted to be due from the Government or in the hands of its officers for distribution. These questions are often most difficult to determine; so difficult that nothing less than judicial investigation can arrive at a satisfactory conclusion in the premises. I suggest, as a remedy, that in such cases the Attorney-General be authorized, according to the general practice of equity, to file a bill of interpleader in the supreme court of the District of Columbia, making the different claimants parties defendant, pay the money into court, have the Government discharged, and leave the parties to settle their controversies among themselves.

REPORT OF THE SOLICITOR OF THE TREASURY.

By the report of the Solicitor of the Treasury, (Exhibit 1,) it will be seen that he is making great efforts to collect judgments due the United States, many of which have been long in abeyance, and that he has succeeded in collecting a large amount of money. In this work, however, he is hampered by the fact that there is no fund available with which to pay for the services of district attorneys and others in hunting up parties and evidence, and doing the legal work necessary to these collections. As a remedy he suggests that a fund be placed at the disposition of the Attorney-General to be used for this purpose. If this be done, and I recommend that it shall be done, I suggest that it embrace and take the place of the $500 appropriation heretofore made for the prosecution and collection of claims. An estimate for an appropriation of $5,000 for this purpose has been made.

AMENDMENTS OF THE LAWS.

Some months since I addressed a circular letter to the judges of the circuit and district courts asking for suggestions, as to amendments of the laws, which their experience indicated as important. To these letters a number of answers have been received, many of them speaking upon the same subjects and expressing concurrent views. To these, as well as to some amendments which have been otherwise suggested, I ask attention.

DEGREES OF MURDER.

In most of the States a distinction is recognized between degrees of murder, and punishment graded accordingly. In the United States statutes no such distinction is recognized. The result is that convictions are had, and sentences of death imposed, in cases which, according to the practice in most of the States, would be murder in the second degree. As a natural consequence there immediately follows an application for executive clemency. The judge is constrained by the laws to impose a sentence against which his judgment protests, and the only remedy is to immediately importune the President to undo the action of the court by a commutation. I think this should be remedied by statute.

TERRITORIAL JURISDICTION OF CIRCUIT COURTS.

It is certainly anomalous that courts of the same sovereignty should be regarded as foreign to each other, and yet such is in some cases the fact with reference to United States courts. For instance, it has been held, though perhaps the question can not be regarded as settled, that a receiver, appointed by the circuit court of the United States in one district, can not maintain a suit in the circuit court of another dis-

trict; and the effect of a decree appointing a receiver in one district upon the property belonging to the same person or corporation in another district is doubtful.

It is suggested by judges of much experience, and the suggestion seems to me to be of much force, that it would be an improvement were some legislation had, which, in the appointment of a receiver for instance, would give to the court first taking jurisdiction over a party whose property is found in several districts, the primary right to hear and determine all questions in relation thereto, as in bankruptcy proceedings, and as the courts of one county in a State are given jurisdiction over property in that and other counties of the same State. Authority should also be given to a receiver appointed in one district to bring suit for assets in the Federal courts of any other district.

FEDERAL JURISDICTION OF CRIMES AGAINST THE GOVERNMENT.

The United States courts ought to have jurisdiction to investigate and punish any crime perpetrated in, and as a part of, the commission of any offense against the laws of the United States. Thus, if in resisting an officer, intimidating a witness, or otherwise violating the Federal laws, murder is committed, the Federal courts ought to have authority to try such murderer for murder. So, provision ought to be made giving Federal courts exclusive jurisdiction for the full and final trial of Federal officers who, while in the discharge of their duties, acting in good faith, as an incident of such a discharge of duty, commit acts which would otherwise be violations of the laws of some State. The constitutional right of Congress to provide for such jurisdiction is recognized in section 643 of the Revised Statutes—a statute upheld by the Supreme Court. Recent events, of great public interest, emphasize the necessity for an extension of such legislation.

UNITED STATES COMMISSIONERS.

From a number of judges, as well as from other sources, comes the information that very great abuses arise out of the action of commissioners of the circuit courts in the amount of fees they make and charge for themselves, as well as those which they assist the marshals, and, in some cases, district attorneys, in making. Whether it is practicable to eliminate entirely the excessive charges in the enormous bills of expense in proceedings had before these commissioners is perhaps doubtful; but certainly Congress, by enacting a clear and definite fee bill for such proceedings, and by providing that no prosecutions shall be commenced except in an emergency shown in an affidavit, until the district attorney shall have approved of the commencement of such proceedings, and by prescribing severe punishment for any violations of the laws so enacted, can do much to repress these abuses and relieve the Treasury from illegal exactions.

THE TERRITORIAL COURT IN THE INDIAN TERRITORY.

The judicial situation in the Indian Territory is anomalous and unsatisfactory. The law organizing a court for that Territory provides for no grand jury, no commissioners, or examining magistrates, and is in other ways defective; but, as this subject is likely to have attention in connection with the erection of a Territorial government for Oklahoma, I need not enlarge upon it.

In connection with this court, however, I call attention to the fact that this court, the court in the western district of Arkansas, and the court recently provided for at Paris, Texas, require an expenditure of money, in the payment of witnesses, that very largely depletes the appropriation made by Congress for that purpose. Indeed, I am advised by the accounting officer of this Department, that the demands of these three courts are such, that, if they are met, the result will be a very large deficiency, or else the courts in other districts will be obliged to stop for want of funds.

In view of these facts the estimate for the payment of witnesses for the next year has been made in the sum of $1,000,000, instead of $900,000, as appropriated for the current year. This item will account for any excess in the estimates of this Department over the estimates for the last year. Aside from this item the aggregate estimates are less than last year.

As illustrating how a failure in the appropriations, resulting in a stoppage of the courts, adds to the expenses of the Government, a statement of the marshal of the western district of Arkansas is printed as Exhibit Q to this report, where it appears that the failure of funds at a single term of court cost the Government $25,000.

I ask attention to this statement also, as an evidence of the vast criminal business of that district, and the efficiency shown in dispatching that business by the court and court officers.

APPEALS IN ADMIRALTY.

It is suggested by a judge of large experience in admiralty matters that section 631, allowing an appeal from a decree in admiralty, where the matter in dispute exceeds $50, should be changed, so as to make the limit $500. A sailor brings a suit for wages and gets a decree for $51; the ship may appeal and put him to great expense and delay. It seems that the judgment of a district judge ought to be conclusive to the amount of $500, at least.

ELECTION LAW.

Section 5511, it is said, does not cover an attempt to commit any of the crimes therein defined, except that of voting in the name of another person. It ought to provide for the punishment of an attempt to commit any of the crimes therein specified. Other valuable amendments

to this and the cognate sections are suggested, which I shall be glad to place at the disposal of any committee considering the subject.

OTHER AMENDMENTS.

A number of amendments are suggested in matters of detail which seem to be necessary to make the statutes properly cover the subject-matter embraced in existing laws.

Thus, section 5342 relates to an attempt to commit murder or manslaughter, but confines it to means "not constituting the offense of an assault with a dangerous weapon." This limitation, it would seem, ought to be stricken out.

Section 5345 provides for punishment of rape. Should it not also cover assault with intent?

A judge who has given a good deal of thought to the subject, as brought to his attention by experience, suggests that great hardship often results to persons without means, who are brought long distances to court, and being discharged without indictment or after acquittal at the place of trial, have no means of getting home.

It is also suggested that the law requiring judges to audit and certify to allowances of claims ought to be repealed, in view of the fact that Congress has provided that suits upon such claims may be brought before the same judges, wherein they will be called upon to hear and determine the same judicially.

Section 5391, directing that the punishment of offenses not specially provided for by Federal law, shall be the same as prescribed by the laws of the State in which the offense is committed, "*now in force*," should be amended by adding "or which may be in force at the time of the commission of such offense."

Section 5467 should be amended by striking out the words "any such person" in the seventh line from the bottom of said section and inserting the word "or" in its place; an amendment evidently necessary to carry out the purpose of the section.

Section 968 ought to be amended to correspond with the judiciary act of 1887, so that in order to recover costs the plaintiff must recover the minimum of jurisdiction, $2,000. As the law now is, it is said if he sues for over $2,000 and recovers over $500, he recovers costs.

By the same judge it is suggested that there ought to be a law giving jurisdiction of crime committed on American vessels upon the lakes upon either side of the boundary line. For the want of such a law many crimes go unpunished, the Canadian courts not having any special interest therein.

He also says that section 5478, punishing burglary of post-offices, ought to be amended by increasing the maximum of punishment to twenty years, as five years is wholly inadequate for the case of a persistent house-breaker.

Another judge, who has had great experience in the administration of the internal revenue laws, is of the opinion that the minimum punishment for infraction of these laws might be made less, as it is the certainty and not the magnitude of punishment that deters crime.

The answers to the circular letter above referred to, point out many other defects in the Federal laws as well as the needed amendments—defects and amendments which only experience in the actual administration of the laws in court would suggest. In some instances draughts of the needed amendments are submitted.

All of these papers I shall be glad to place at the disposal of Congress.

REPAIRS FOR THE COURT-HOUSE OF THE DISTRICT OF COLUMBIA.

I beg to call the attention of Congress to the following communication from the supreme court of the District of Columbia with reference to the sanitary condition of the court-house. This communication speaks for itself and certainly demands prompt action on the part of Congress:

SUPREME COURT OF THE DISTRICT OF COLUMBIA,
November 23, 1889.

Hon. W. H. H. MILLER,
Attorney-General:

SIR: We respectfully call the attention of the Hon. the Attorney-General to the urgent necessity of a prompt appropriation by Congress for alterations and repairs to the building known as the old City Hall, in which the sessions of the Supreme Court of the District of Columbia are held.

In consequence of orders of the Attorney-General, something was done after the adjournment in July towards a rectification of the serious defects of the system of water-closets, but the small amount of money at the disposal of the office could only accomplish reforms as to a few of the many establishments of this character, located at numerous points about this large building. Those untouched are in a seriously defective condition—some being without any ventilation whatever, and the others very imperfectly provided with such appliances as are now considered essential for safety. We are assured by competent authority that such insufficient safeguards would not be tolerated by the health officers, in any building, public or private, under their charge.

Perhaps a more serious cause of complaint is the faulty arrangement for the supply of external air to the heating system in use throughout the building.

This supply is supposed to come through two horizontal gratings level with the surface of the ground; thence descending some 10 feet to a tunnel, communicating at each end, east and west, with these gratings, This tunnel is about 8 feet in height by about 6 feet in width; the bottom laid with brick like an ordinary pavement, and the sides of stone, with an arch at the top. The open gratings admit the rain, and the damp air, which it is supposed passes through the length of the tunnels and at different points is admitted to the registers opening into the court-room. The imperfect paving of the floor of the tunnel offers no obstacle to the escape of exhalations from the ground beneath. The tunnel is about 276 feet long; and at the points where the air ascends to many of the rooms the atmosphere appears quite unaffected by the external air, but seems to be dead and disagreeable. That such a system needs prompt modification, must be apparent. One obvious remedy would be to erect towers in the grounds surrounding the building, to the east and west respectively of

the present gratings, through which wholesome air, taken from an elevation some 15 feet above the ground, could be conducted to a tunnel, protected by thick coatings of cement from impurities from the ground beneath the cellars, and from infiltration, from the masonry at the sides.

We are painfully sensible of the necessity of a prompt reformation of these glaring evils. The health officer and the Inspector of plumbing of the District have each expressed themselves very positively to this effect.

We also suggest that the comfort of the justices, and the becoming discharge of their duties would be much promoted by a change in the room used by the General Term, which would be accomplished by the removal of a wall between it and our consultation-room, and its reconstruction at the opposite end of the chamber.

We respectfully request that the Attorney-General should incorporate the substance of these suggestions in his forthcoming report, and urge the passage of an appropriation for the purpose, to be made available at the earliest possible day.

Very respectfully, for the Court.

E. F. BINGHAM, *C. J.*

All of which I have the honor to submit.

Your obedient servant,

W. H. H. MILLER,
Attorney-General.

9595 AT G——III

EXHIBITS.

EXHIBIT A.—*Statement showing number of civil suits to which the United States was a party, pending in the district and circuit courts of the United States, July 1, 1889, with the number terminated during the fiscal year ending June 30, 1889.*

Districts.	Number pending July 1, 1889.					Number terminated during the fiscal year ending June 30, 1889.																Appealed from district court to circuit court.			Appealed from circuit court to supreme court.			Total number terminated and appealed.
						Judgments in favor of the United States.				Judgments for defendants.				Dismissed or discontinued.				Total.										
	Customs.	Internal revenue.	Post-office.	Miscellaneous.	Total.	Customs.	Internal revenue.	Post-office.	Miscellaneous.	Customs.	Internal revenue.	Post-office.	Miscellaneous.	Customs.	Internal revenue.	Post-office.	Miscellaneous.	Customs.	Internal revenue.	Post-office.	Miscellaneous.	Customs.	Internal revenue.	Miscellaneous.	Customs.	Internal revenue.	Miscellaneous.	
Alabama, northern district	....	20	10	18	48	....	....	....	155	....	....	1	138	....	2	....	1	....	2	1	294	....	....	....	....	....	....	297
Alabama, middle district	....	3	....	10	13	....	....	....	....	....	....	....	9	....	1	....	....	....	1	....	9	....	....	....	....	....	....	10
Alabama, southern district	....	....	....	15	15	....	....	....	15	....	....	....	....	....	....	....	46	....	....	....	61	....	....	2	....	....	....	63
Alaska	....	....	..	10	10	....	....	....	2	....	....	....	....	....	....	....	1	....	1	....	3	....	....	....	....	....	....	4
Arkansas, eastern district	....	....	1	5	6	....	....	....	1	....	....	....	....	....	....	....	....	....	....	....	1	....	....	....	....	....	....	1
Arkansas, western district	....	....	....	57	57	....	....	....	7	....	....	....	....	....	....	....	20	....	....	....	27	....	....	....	....	....	....	27
Arizona	....	....	1	15	16	....	....	....	6	....	....	2	....	1	....	....	2	1	....	....	17	....	....	*3	....	....	....	21
California, northern district	10	9	10	102	131	10	....	....	12	3	....	....	....	2	5	1	6	15	6	1	18	....	....	2	....	....	2	44
California, southern district	2	....	....	14	16	1	....	....	1	....	....	....	1	....	1	..	1	1	1	....	3	....	....	....	....	....	....	5
Colorado	....	....	4	62	66	....	....	....	39	....	....	....	6	....	....	....	43	....	....	....	88	....	....	....	....	....	3	91
Connecticut	....	....	....	4	4	....	3	....	....	....	....	....	....	....	....	....	....	....	3	....	3	....	....	....	....	....	....	3
Dakota	....	....	1	131	132	....	....	....	....	....	....	....	....	....	....	....	4	....	....	....	4	....	....	....	....	....	....	4
Delaware	....	....	....	....	....	....	....	....	....	....	....	....	....	....	....	2	....	....	....	2	....	....	....	....	....	....	....	2
District of Columbia	5	3	6	36	50	....	....	12	1	....	....	....	3	....	....	....	5	....	....	12	9	....	....	....	....	....	....	21
Florida, northern district	....	....	19	8	27	....	....	....	....	....	....	1	5	....	....	1	....	....	....	2	5	....	....	....	....	....	....	7
Florida, southern district	....	....	3	....	3	1	....	2	....	....	....	....	3	....	....	4	....	1	....	6	3	....	....	....	....	....	....	10
Georgia, northern district	....	8	2	53	63	....	2	....	64	....	....	....	....	....	3	....	70	....	5	....	134	....	....	....	....	....	..	139
Georgia, southern district	....	....	11	3	14	....	....	1	1	....	....	3	1	....	....	....	1	....	....	4	3	....	....	....	....	....	....	7
Idaho	....	....	4	6	10	....	....	1	4	....	....	....	....	....	....	....	9	....	....	1	13	....	....	....	11	....	....	15
Illinois, northern district	7	2	5	5	19	2	2	....	....	....	....	....	2	....	....	....	....	2	2	....	4	....	....	....	....	....	....	6
Illinois, southern district	....	1	4	2	7	....	1	....	....	....	....	....	1	....	1	1	2	....	2	1	3	....	....	....	....	....	....	6
Indiana	....	....	1	7	8	1	....	....	....	....	....	....	....	1	....	....	....	2	....	....	....	....	....	....	....	....	....	2
Indian Territory	....	....	....	1	1	....	....	....	....	....	....	....	....	....	....	....	....	....	....	....	....	....	....	....	....	....	....	....
Iowa, northern district	..	....	....	2	2	....	....	....	1	....	....	....	....	....	....	....	2	..	....	....	3	....	....	....	....	....	..	3
Iowa, southern district	....	1	4	5	10	....	....	....	....	....	....	....	1	....	1	....	1	..	1	....	2	....	....	....	....	....	....	3
Kansas	....	....	5	23	28	....	....	3	17	....	....	....	11	....	....	....	18	....	....	3	46	....	11	....	....	....	....	49
Kentucky	....	46	2	9	57	....	30	..	10	....	1	1	....	....	5	....	5	....	36	1	15	....	....	....	1	1	19	53
Louisiana, eastern district	23	6	2	36	67	10	1	....	4	....	....	2	1	4	4	....	8	14	5	2	13	1	....	....	1	1	19	39

Louisiana, western district			1	25	26			1	23			1	10				10			2	43			7			1	53
Maine	1			3	4	2		1	3				2	2			3	4		1	8			1				14
Maryland			3	41	44				3				163				1				167							167
Massachusetts	207	28	15	66	311	13	22		2	5			1	4	4		9	22	26		12							60
Michigan, eastern district	12		1	15	28	6		2	3							10	44	6		12	47							65
Michigan, western district			3	10	13	3			11							1	1	3		1	12			1			1	18
Minnesota	4	2	12	88	106				17				2	1		4	16	1		4	35							40
Mississippi, northern district				16	16			1	2		2		23						2	1	25							28
Mississippi, southern district				5	5				13				3				2				18							18
Missouri, eastern district				13	13	1			1	1			1	1			3	3			5							8
Missouri, western district	1	5	5	5	16		4	1							1		14		5	1	14							20
Montana				4	4				5												5							5
Nebraska				2	2				8				1				2				11							11
Nevada				10	10				1												1							1
New Hampshire																												
New Jersey	5			17	22				4			1					7			1	11							12
New Mexico			1	68	69			3	4							2	31			5	35							40
New York, northern district	12	4	2	19	37	2		3	2									2		3	2							7
New York, southern district	217	18	5	42	282	53	1		6	1			2	20	1		7	74	2		15						1	92
New York, eastern district	8		1	18	27					2				24			8	26			8							34
North Carolina, eastern district		2			2		1		5		1	1					8		2	1	13							16
North Carolina, western district		1	4	21	26				57		3		1				16		3		74							77
Ohio, northern district	2		1	3	6	3			1				2	3				6			3							9
Ohio, southern district			7	1	8			1	2							1	8			2	10							12
Oregon				45	45				5				8				2				15						4	19
Pennsylvania, eastern district	152	194		12	358	2	1	1	2	12	1			14	7		1	28	9	1	3			2	3			40
Pennsylvania, western district	5	1	2	156	164										9		1		9		1							10
Rhode Island		2			2				51												51							51
South Carolina		1	2	2	5			5	2				3						5		5							10
Tennessee, eastern district		1	1	11	13			3	6								2		3		8							11
Tennessee, middle district		1		26	27		1		47		1		2		3		1		5		50			1				56
Tennessee, western district			1	42	43				9								55				64							64
Texas, northern district				2	2			2	1				15				5		2		21							23
Texas, eastern district				24	24		1	1	2				1				4		1	1	7							9
Texas, western district	72		2	5	79	3			1	1							2	4			3	1						8
Utah			19	41	60			1	13				7				2			1	22						1	24
Vermont				4	4																							
Virginia, eastern district			1	36	37			3	3		1	2	41						1	5	44		1	35			1	87
Virginia, western district		27	2	8	37		23		8						7	1	46		30	1	54							85
Washington	4			58	62	2			3				9				1	2			13			4				19
West Virginia		6	3		9												1				1							1
Wisconsin, eastern district				5	5				3						1				1		3							4
Wisconsin, western district	1		2	9	12			2	1					1			8	1		2	9							12
Wyoming				5	5				4				2				3				9							9
Total	750	387	191	1,622	2,950	115	95	50	674	25	10	18	483	78	56	28	576	218	161	91	1,733	2	2	58	5	1	16	2,287

* Appealed to supreme court of Territory.

† Post-office.

EXHIBIT B 1.—*Statement showing the number of criminal prosecutions pending in the circuit and district courts of the United States on July 1, 1889, with the number terminated during the fiscal year ending June 30, 1889.*

Districts.	Number pending July 1, 1889.										Number terminated during the fiscal year ending June 30, 1889.													
											Customs.				Internal revenue.				Post-office.				Election laws.			
	Customs prosecutions.	Internal-revenue prosecutions.	Post-office prosecutions.	Prosecutions under the election laws.	Prosecutions under naturalization laws.	Prosecutions under intercourse laws.	Prosecutions under pension laws.	Prosecutions for embezzlement.	Miscellaneous prosecutions.	Total.	Convictions.	Acquittals.	Nolled, discontinued, or quashed.	Total.	Convictions.	Acquittals.	Nolled, discontinued, or quashed.	Total.	Convictions.	Acquittals.	Nolled, discontinued, or quashed.	Total.	Convictions.	Acquittals.	Nolled, discontinued, or quashed.	Total.
Alabama, northern district	....	288	3	....	....	....	....	....	18	309	....	....	....	....	175	62	119	356	2	1	3	6	....	....	....	....
Alabama, middle district	....	87	....	....	....	....	....	1	58	146	....	....	....	....	118	28	65	211	....	....	....	....	....	....	....	....
Alabama, southern district	....	6	....	....	....	....	....	....	158	164	....	....	....	....	....	....	....	....	1	....	....	1	....	....	....	....
Alaska	....	....	....	....	....	....	....	....	21	21	....	....	....	....	....	....	....	....	....	....	....	....	....	....	....	....
Arkansas, eastern district	....	30	....	4	....	....	....	....	8	42	....	....	....	....	15	....	6	21	5	....	....	5	9	2	....	11
Arkansas, western district	....	17	4	....	....	18	....	....	69	108	....	....	....	....	107	9	20	136	3	2	....	5	....	....	....	....
Arizona	....	....	....	....	....	....	....	....	4	4	5	2	....	7	....	....	1	1	1	....	....	1	....	....	....	....
California, northern district	12	207	3	1	....	....	2	1	64	290	4	5	1	10	5	....	3	8	3	1	7	11	2	2	2	6
California, southern district	1	3	2	....	....	....	....	....	7	13	1	....	....	1	1	....	....	1	2	1	....	3	....	....	....	....
Colorado	....	1	11	2	....	....	1	1	11	27	....	....	....	....	....	....	....	....	3	....	....	3	3	1	5	9
Connecticut	....	4	....	....	....	....	....	1	....	5	....	....	....	....	3	....	8	11	5	....	3	8	4	....	....	4
Dakota	....	5	2	....	*1	2	....	....	21	31	3	....	1	4	14	....	4	18	6	....	1	7	1	....	2	3
Delaware	....	....	....	....	....	....	....	....	....	....	....	....	....	....	1	1	....	2	5	....	2	7	....	....	....	....
District of Columbia	....	2	9	....	....	....	12	....	907	930	....	....	....	....	....	....	....	....	2	1	....	3	....	....	....	....
Florida, northern district	....	....	....	....	....	....	....	....	31	31	....	....	....	....	1	....	....	1	....	1	....	1	....	1	1	2
Florida, southern district	1	4	....	....	....	....	....	....	....	5	1	....	1	2	2	1	1	4	1	....	....	1	....	....	....	....
Georgia, northern district	....	171	7	....	....	....	4	....	32	214	....	....	....	....	877	135	284	796	3	1	6	10	....	....	....	....
Georgia, southern district	....	19	2	....	....	....	....	....	9	30	....	....	....	....	11	2	7	20	6	5	5	16	....	....	....	....
Idaho	....	....	6	....	....	1	4	....	55	66	....	....	....	....	....	....	....	....	....	....	....	....	....	....	....	....
Illinois, northern district	2	20	23	2	....	....	4	1	15	67	....	....	1	1	4	1	27	32	18	2	13	33	1	....	1	2
Illinois, southern district	....	18	11	8	....	....	1	....	4	42	....	....	....	....	93	6	12	111	28	3	11	42	....	....	....	....
Indiana	1	3	7	32	....	....	7	....	19	69	....	....	....	....	7	1	13	21	10	1	18	29	4	14	154	172
Indian Territory	....	....	....	....	....	....	....	....	4	4	....	....	....	....	....	....	6	6	....	....	....	....	....	....	....	....
Iowa, northern district	....	28	1	....	....	....	1	4	15	49	....	....	....	....	131	12	21	164	8	....	3	11	....	....	....	....
Iowa, southern district	....	40	7	....	....	....	....	2	5	54	....	....	....	....	67	2	33	102	6	1	1	8	....	....	....	....
Kansas	....	32	24	....	....	31	4	....	194	285	....	....	....	....	16	....	25	41	15	2	10	27	....	....	....	....
Kentucky	....	60	4	....	....	....	4	....	26	94	....	....	....	....	345	90	36	471	3	1	....	4	2	1	....	3
Louisiana, eastern district	....	10	63	1	....	....	9	....	34	117	....	....	....	....	3	3	....	6	1	1	1	3	....	....	....	....
Louisiana, western district	....	8	....	....	....	....	3	....	17	28	....	....	....	....	5	7	1	13	1	2	1	4	....	....	....	....
Maine	6	49	5	....	....	....	4	2	2	68	2	....	4	6	91	2	30	123	4	....	2	6	2	....	....	2

Maryland			2	3				3	8					8	4	17	29	6	5	2	13	9	2	3	14
Massachusetts	1	91	24	7	1		9	3	21	157					86	19	6	61	10	2	13	25	25	1	5	31
Michigan, eastern district	7	26	14	2			2		52	103	9	2	2	13	28	3	7	38	11	1		12				
Michigan, western district		1	6				2		21	30					11	1	4	16	7	1	2	10				
Minnesota		39	7			45		2	76	169					8	1	93	102	7	3		10				
Mississippi, northern district		324	5						9	338					205	76	75	358	3	4	1	8				
Mississippi, southern district		31	1				1		23	56					42	11	5	58	2	1		3				
Missouri, eastern district		34	16	5	65	†1	5	1	11	138					76	2	43	121	6	5	4	15	4	3	2	9
Missouri, western district		50	15		*5		3		55	128					109	31	36	176	12	5	14	31	4	3	2	9
Montana									4	4																
Nebraska		4	8				1		22	35					6	5	12	23	18	6	16	35	14		1	15
Nevada																										
New Hampshire		2	5				2			9					3			3	1			1				
New Jersey	4	3	2		2	1			12	24		1	2	3	2	1	1	4	3	1		4	2		1	3
New Mexico		2	3	39					133	177							3	3	1			1			3	3
New York, northern district	8	20	25	10			4	12	26	105	5		5	10	51		14	65	22		7	29	16	2	3	21
New York, southern district	11	26	22	14			7		31	111	6		6	12	3		3	6	13	1	2	16	1		1	2
New York, eastern district			1						5	6			3	3			8	8	1	1	5	7	2		7	9
North Carolina, eastern district		14	2	1					2	19					19	4	7	30	5	1		6	1	3		4
North Carolina, western district		175								175					118	41	76	235	1	1	1	3				
Ohio, northern district		4	8				2		4	18					46	2	16	64	15	3	7	25	1			1
Ohio, southern district		3	14	1			10		29	57					6	1		7	12	2	3	17		1	2	3
Oregon		1	7	6		3		1	18	36	6		2	3	5			5	9			9	5	1	1	7
Pennsylvania, eastern district		3	2							5					2	1	3	6	10	9	11	30				
Pennsylvania, western district		9	12				16		21	58					1		13	14	9	5	13	27				
Rhode Island		3	3				3			9					1		2	3	4	1	4	9				
South Carolina		18	5				1		5	29	115	87	16	218	4	3	3	10								
Tennessee, eastern district		147		13			2		10	172					185	50	45	280	8	2	4	14	8	6	1	15
Tennessee, middle district		37	1				1	1	5	45					151	89	35	275	1	1	5	7				
Tennessee, western district		81		73					2	156					92	45	56	193	2	4		6		1		1
Texas, northern district		6	3			3		7	45	64					4	6	11	21	9	6	3	18				
Texas, eastern district		20	10						11	41					20	8	15	43	4	3	10	17				
Texas, western district	40	15	8	1			1		10	75	89	3	52	94	12	2	12	26	3	3	20	26			3	3
Utah		1	14						361	376					1			1			3	3				
Vermont		15	8				1		6	30	1			1	1		5	6	5		2	7				
Virginia, eastern district			14	2			9	1	50	76					6	4	1	11	1	2		3	1		1	2
Virginia, western district		182						3	12	197					130	64	68	262			1	1				
Washington Territory	9		4			2		2	28	45	9	1		10	4		1	5								
West Virginia		369	18	121			8		17	533					164	88	145	397	8	4	2	14	5	30	18	48
Wisconsin, eastern district		1	4				6		14	25					6		1	7	2			2				
Wisconsin, western district		5	2			46				53									2		2	4				
Wyoming									7	7										1		1				
Total	103	2,874	488	348	74	153	156	47	2,969	7,212	206	101	96	403	3,158	926	1,564	5,648	370	110	244	724	126	74	214	414

*Civil rights act.

†Prosecution for violation of sections 1 and 3, interstate commerce laws.

EXHIBIT B 2.—*Statement showing the number of criminal prosecutions pending in the district and circuit courts of the United States on July 1, 1889, with the number terminated during the fiscal year ending June 30, 1889.*

Districts.	Number terminated during the fiscal year ending June 30, 1889.																				Total number terminated during the fiscal year ending June 30, 1889.
	Civil-rights act.				Intercourse laws.				Pension laws.				Embezzlement.				Miscellaneous.				
	Convictions.	Acquittals.	Nolled, discontinued, or quashed.	Total.	Convictions.	Acquittals.	Nolled, discontinued, or quashed.	Total.	Convictions.	Acquittals.	Nolled, discontinued, or quashed.	Total.	Convictions.	Acquittals.	Nolled, discontinued, or quashed.	Total.	Convictions.	Acquittals.	Nolled, discontinued, or quashed.	Total.	
Alabama, northern district	.....	.....	.....	.....	.....	.....	.....	.....	.....	.....	.....	.....	.....	.....	.....	.....	10	19	13	42	404
Alabama, middle district	.....	.....	.....	.....	.....	.....	.....	.....	.....	.....	.....	.....	.....	.....	.....	.....	84	14	2 51	349	560
Alabama, southern district	.....	.....	.....	.....	.....	.....	.....	.....	.....	.....	.....	.....	.....	.....	.....	.....	155	44	32	231	232
Alaska	.....	.....	.....	.....	.....	.....	.....	.....	.....	.....	.....	.....	.....	.....	.....	.....	21	1	15	37	37
Arkansas, eastern district	.....	.....	.....	.....	.....	.....	.....	.....	.....	.....	.....	.....	.....	.....	.....	.....	5	4	.....	9	46
Arkansas, western district	.....	.....	.....	.....	137	5	26	168	.....	.....	.....	.....	.....	.....	.....	.....	145	86	50	281	590
Arizona	.....	.....	.....	.....	8	.....	1	9	.....	.....	.....	.....	.....	.....	.....	.....	14	7	8	29	47
California, northern district	.....	.....	.....	.....	.....	.....	.....	.....	.....	.....	1	1	.....	1	2	3	9	6	45	60	99
California, southern district	.....	.....	.....	.....	.....	.....	.....	.....	.....	.....	.....	.....	.....	.....	.....	.....	17	12	2	31	36
Colorado	.....	.....	.....	.....	.....	.....	.....	.....	.....	.....	.....	.....	.....	.....	.....	.....	3	3	4	10	22
Connecticut	.....	.....	.....	.....	.....	.....	.....	.....	2	.....	.....	2	.....	.....	.....	.....	2	.....	.....	2	27
Dakota	.....	.....	.....	.....	5	.....	2	7	.....	.....	.....	.....	2	.....	.....	2	3	1	30	34	75
Delaware	.....	.....	.....	.....	.....	.....	.....	.....	.....	.....	.....	.....	.....	.....	4	4	.....	.....	2	2	15
District of Columbia	.....	.....	.....	.....	.....	.....	.....	.....	1	2	5	8	.....	.....	.....	.....	2,599	687	130	3,416	3,427
Florida, northern district	.....	.....	.....	.....	.....	.....	.....	.....	.....	.....	.....	.....	.....	.....	.....	.....	13	21	43	77	81
Florida, southern district	.....	.....	.....	.....	.....	.....	.....	.....	.....	.....	.....	.....	.....	.....	.....	.....	2	1	2	5	12
Georgia, northern district	.....	.....	.....	.....	.....	.....	.....	.....	.....	.....	.....	.....	.....	.....	.....	.....	1	6	12	19	825
Georgia, southern district	.....	.....	.....	.....	.....	.....	.....	.....	.....	.....	.....	.....	.....	.....	.....	.....	3	2	9	14	50
Idaho	.....	.....	.....	.....	1	.....	.....	1	.....	.....	.....	.....	.....	.....	.....	.....	24	5	39	68	69
Illinois, northern district	.....	.....	.....	.....	.....	.....	.....	.....	1	.....	1	2	1	.....	.....	1	6	.....	15	21	92
Illinois, southern district	.....	.....	.....	.....	.....	.....	.....	.....	5	.....	5	10	.....	.....	.....	.....	15	7	8	30	193
Indiana	.....	.....	.....	.....	.....	.....	.....	.....	4	.....	3	7	1	1	1	3	13	1	10	24	256
Indian Territory	.....	.....	.....	.....	1	.....	.....	1	.....	.....	.....	.....	.....	.....	.....	.....	14	3	.....	17	24
Iowa, northern district	.....	.....	.....	.....	.....	.....	.....	.....	1	.....	.....	1	.....	.....	1	1	6	2	10	18	195
Iowa, southern district	.....	.....	.....	.....	.....	.....	.....	.....	.....	.....	.....	.....	.....	.....	.....	.....	8	.....	1	9	119
Kansas	.....	.....	.....	.....	21	1	11	33	3	2	6	11	.....	.....	.....	.....	31	16	58	105	217
Kentucky	.....	.....	.....	.....	.....	.....	.....	.....	2	1	.....	3	.....	.....	.....	.....	10	5	4	19	500
Louisiana, eastern district	.....	.....	.....	.....	.....	.....	.....	.....	.....	.....	.....	.....	.....	.....	.....	.....	.....	2	.....	2	11
Louisiana, western district	.....	.....	.....	.....	.....	.....	.....	.....	1	1	.....	2	.....	.....	.....	.....	9	10	12	31	56
Maine	.....	.....	.....	.....	.....	.....	.....	.....	9	.....	3	12	.....	.....	.....	.....	8	3	3	11	160

Maryland								2	3	2	7	2			2	25	6	20	51	116
Massachusetts								3	1	4	8	1			1	22	5	10	37	163
Michigan, eastern district								5		3	8					15	6	2	23	94
Michigan, western district								2	2	3	7					16	4	8	28	61
Minnesota					13	1	1	15				1			1	22	6	12	40	168
Mississippi, northern district									1		1					5	4	7	16	383
Mississippi, southern district								2	2	2	6					14	2	3	19	86
Missouri, eastern district						1		*1	3	2	3	8				21	3	16	40	194
Missouri, western district			12	12				4		5	9					118	21	61	200	437
Montana																	1	2	3	3
Nebraska										1	1					12	3	44	59	133
Nevada																2		1	3	3
New Hampshire																		1	1	5
New Jersey							2	2	1		1	2				15	6	7	28	46
New Mexico																8	19	94	121	128
New York, northern district								1		11	12	2			2	32	4	27	63	202
New York, southern district								2		2	4			1	1	24	8	6	38	79
New York, eastern district					1		1	*2								6	2	11	21	59
North Carolina, eastern district								1			1					3	1	1	5	46
North Carolina, western district										2	2					2			2	242
Ohio, northern district								2	1	1	4					10	1	1	12	100
Ohio, southern district								3	1	4	8					8		1	9	44
Oregon					75	1		76								20	7	3	30	135
Pennsylvania, eastern district								6	1	2	9					12	5	9	26	71
Pennsylvania, western district								1	1	1	3					35	11	6	52	96
Rhode Island										2	2					3	1	3	7	21
South Carolina									1	1	2	17	19	3	39					269
Tennessee, eastern district								10	2	2	14					13	3	4	20	343
Tennessee, middle district								2	1	2	5					3	5	5	13	300
Tennessee, western district								2			2					11	2		13	215
Texas, northern district					1			1						1	1	7	13	18	33	74
Texas, eastern district																3	6	4	13	73
Texas, western district										3	3					3	4	12	19	191
Utah																360	36	134	530	534
Vermont										2	2									16
Virginia, eastern district												5		1	6	20		17	37	59
Virginia, western district								1		2	3		1		1	2	4	1	7	274
Washington Territory					19			19								43	13	6	62	96
West Virginia								6	2		8					6	5	7	18	485
Wisconsin, eastern district								1	1	1	3					22	2	3	27	39
Wisconsin, western district					45		3	48	1		1					3			3	56
Wyoming																				1
Total			12	12	327	9	47	383	91	27	86	204	32	22	14	68	4,175	1,187	1,370	6,732	14,588

* Naturalisation acts.

EXHIBIT C 1.—*Statement of the amount arising from civil suits to which the United States was a party, and from criminal prosecutions in the circuit and district courts of the United States, during the fiscal year ending June 30, 1889.*

Districts.	Amount of judgments obtained during the year in favor of the United States.					Amounts of fines, forfeitures, and penalties imposed during the year.								
	Customs.	Internal revenue.	Post-office.	Miscellaneous.	Total.	Customs.	Internal revenue.	Post-office.	Election laws.	Intercourse laws.	Pension laws.	Embezzlement.	Miscellaneous.	Total.
Alabama, northern district				$22,881.85	$22,881.85		$23,935.39	$164.35					$952.98	$25,052.72
Alabama, middle district							16,796.21						7,144.16	23,940.37
Alabama, southern district				2,425.01	2,425.01			100.00					6,354.49	6,454.49
Alaska		$600.00			600.00								3,075.00	3,075.00
Arkansas, eastern district				1,584.54	1,584.54		2,210.00	612.80	$1,197.20				5,161.00	9,181.00
Arkansas, western district				2,700.00	2,700.00		12,100.00	100.60		$3,985.00			5,795.00	21,980.00
Arizona				6,171.21	6,171.21	$50.00				25.00			303.00	378.00
California, northern district	$12,886.19	250.00		51,521.78	64,657.97	300.00	250.00	501.00	50.00				6,250.00	7,351.00
California, southern district	187.00				187.00	500.00		25.00					954.00	1,479.00
Colorado				8,061.63	8,061.63			10.00	75.00				232.00	317.00
Connecticut		362.19			362.19		214.88	733.93	1,013.36		$546.80		124.63	2,633.60
Dakota							120.00			100.00		$973.02	50.00	1,243.02
Delaware								600.00						600.00
District of Columbia			$3,554.30	640.41	4,194.71								15,663.65	15,663.65
Florida, northern district				24.45	24.45		100.00						968.05	1,068.05
Florida, southern district			1,787.59		1,787.59	50.00	200.00	50.00						300.00
Georgia, northern district		154.87		13,323.97	13,478.84		17,100.00	300.00					100.00	17,500.00
Georgia, southern district			605.15		605.15		2,856.08	486.61					823.66	4,166.35
Idaho			10,000.00	452.20	10,452.20								860.00	860.00
Illinois, northern district		2,696.90			2,695.90		40.00	2,772.00	50.00		300.00	300.00	603.00	4,065.00
Illinois, southern district		1,963.92		21.46	1,885.38		9,141.00	1,706.00			698.47		3,336.83	14,882.30
Indiana	5,582.00				5,532.00		580.00	425.00	320.00		51.00		235.00	1,611.00
Indian Territory										15.00			401.00	416.00
Iowa, northern district				1,050.00	1,050.00		1,247.00	501.00			500.00		601.00	2,849.00
Iowa, southern district		4.70			4.70		7,677.00	410.00					102.00	8,189.00
Kansas			269.53	2,806.54	3,076.07		1,250.00	300.00		307.00	2.00		54.00	1,913.00
Kentucky		2,777.35	1,197.00	2,000.00	5,974.35		26,820.00		10.00		700.00		55.00	27,585.00
Louisiana, eastern district	480.68			1,235.58	1,716.26		100.00	100.00						200.00
Louisiana, western district			4,411.46	3,797.56	8,209.02		10.00							10.00
Maine	25.00			10,146.67	10,171.67	50.00	4,540.00		2.00		1,150.00		25.00	5,767.00
Maryland							2,175.00	31.00	50.00				200.00	2,456.00
Massachusetts	453.47			1,890.60	2,344.07		480.00	550.00	100.00		130.00		2,944.00	4,204.00
Michigan, eastern district	6,852.90		388.78	1,116.18	8,357.86	2,715.00	1,136.54	3,000.00			400.00		1,706.00	8,957.54
Michigan, western district	96.65			10,270.86	10,367.51		1,400.00	325.00					4,034.25	5,759.25
Minnesota				13,530.31	13,530.31		160.00	1,350.00		325.00			110.00	2,445.00
Mississippi, northern district							11,220.00							11,220.00
Mississippi, southern district				7,283.92	7,283.92		1,448.00				1,000.00		936.50	3,384.50
Missouri, eastern district	3,200.00			10,000.00	13,200.00		1,629.00	760.00	196.00		4,000.00		105.00	6,690.00

Missouri, western district		600.00	2,000.00		2,600.00		3,725.90	1,025.00	123.00		1,185.00		12,771.34	18,832.24
Montana				11,364.70	11,364.70									
Nebraska				2,207.80	2,207.30		155.00	400.00	94.00				290.00	939.00
Nevada				287.29	287.29								50.00	50.00
New Hampshire														
New Jersey								100.00	500.00				3,350.00	3,950.00
New Mexico			1,200.00		1,200.00								1,179.28	1,179.28
New York, northern district	12,593.00		894.08	4,162.22	17,649.30	11,800.09	1,660.00	900.00	780.00		250.00	87.00	2,466.00	17,443.00
New York, southern district	5,827.71			3,697.04	9,024.75	1,328.00		235.00					33.00	1,596.00
New York, eastern district								1.00					8.00	9.00
North Carolina, eastern district				100.00	100.00		2,620.00						120.00	2,740.00
North Carolina, western district	1,854.03				1,854.03		25,106.16	503.72						25,609.88
Ohio, northern district	300.00			100.00	400.00		3,480.71	2,081.61	245.59				775.61	6,583.52
Ohio, southern district			380.03	1,027.00	1,407.03		400.00	30.00			200.00		200.00	830.00
Oregon				407.65	407.65	425.00	260.00	450.00	827.82	654.00			900.00	3,516.82
Pennsylvania, eastern district	2,920.52	130,955.33	12,517.19	107,899.07	254,292.11		60.00	1,056.00			230.00		530.00	1,876.00
Pennsylvania, western district				286.88	286.88		100.00	865.45					270.00	1,235.45
Rhode Island				1,813.16	1,813.16			15.00					200.00	215.00
South Carolina			501.31		501.31	8,850.00							1,300.00	10,150.00
Tennessee, eastern district				7,854.02	7,854.02		14,358.67	1,153.65	736.86		4,610.80		3,331.53	24,191.51
Tennessee, middle district		194.82		15,923.65	16,118.47		16,075.42	234.30			2,371.40		1,443.20	20,124.32
Tennessee, western district				1,900.00	1,900.00		4,220.00	35.00					1,250.00	5,505.00
Texas, northern district			1,500.88	4,690.00	6,190.88		100.00	32.00					13.00	145.00
Texas, eastern district				1,870.00	1,870.00		1,361.60	550.00					20.00	1,931.60
Texas, western district														
Utah			123.16	35,519.08	35,642.24								28,706.15	28,706.15
Vermont						200.00	38.00	369.75			50.00			657.75
Virginia, eastern district			348.23	3,522.80	3,871.03		600.00	2.50	5.00			500.00	2,600.00	3,707.50
Virginia, western district		1,659.61		2,787.85	4,447.46		13,700.00				1,000.00		205.00	14,905.00
Washington Territory	2,226.10			2,261.52	4,487.62	603.20	200.00						610.25	1,413.45
West Virginia							18,035.54	1,667.13	337.10		610.45		1,001.07	21,651.29
Wisconsin, eastern district				1,937.84	1,937.84		625.00	100.00			1,000.00		1,014.00	2,739.00
Wisconsin, western district			798.58	1,645.95	2,444.53					220.00				220.00
Wyoming				1,100.00	1,100.00									
Total	54,935.25	142,118.69	42,777.27	389,301.75	629,132.96	26,371.20	253,918.10	27,720.80	6,654.93	6,131.00	20,985.92	1,860.02	134,967.63	478,609.60

EXHIBIT C 1.—*Statement of the amounts arising from civil suits to which the United States was a party, etc.*—Continued.

Districts.	Amounts realized from judgments obtained during the year.					Amounts realized on fines, forfeitures, and penalties imposed during the year.							
	Customs	Internal revenue.	Post-office.	Miscellaneous.	Total	Customs.	Internal revenue.	Post-office.	Election laws.	Intercourse laws.	Pension laws.	Miscellaneous.	Total.
Alabama, northern district				$528.83	$528.83		$50.00					$156.52	$206.52
Alabama, middle district												135.75	135.75
Alabama, southern district				1,453.59	1,453.59							1,994.55	1,994.55
Alaska		$275.00			275.00							45.00	45.00
Arkansas, eastern district				769.45	769.45				$972.80				972.80
Arkansas, western district				300.00	300.00			$100.00		$450.00		15.00	565.00
Arizona				71.21	71.21	$50.00				25.00		3.00	78.00
California, northern district				106.14	106.14	150.00	150.00	500.00				650.00	1,450.00
California, southern district	$187.00				187.00			25.00				503.00	528.00
Colorado				3,979.22	3,979.22				75.00			50.00	125.00
Connecticut		362.19			362.19		87.77	733.93	1,013.26		$546.80	124.63	2,506.39
Dakota							120.00			100.00		50.00	270.00
Delaware													
District of Columbia				640.41	640.41							10,430.92	10,430.92
Florida, northern district												423.05	423.05
Florida, southern district			$1,787.59		1,787.59	50.00	100.00	50.00					200.00
Georgia, northern district				200.71	200.71		402.38						402.38
Georgia, southern district								150.00					150.00
Idaho				256.20	256.20							360.00	360.00
Illinois, northern district		163.50			163.50		40.00	720.00	50.00		300.00	500.00	1,610.00
Illinois, southern district		1,863.92		21.46	1,885.38		1,087.26	1,512.56			45.94	354.80	3,000.56
Indiana	5,532.00				5,532.00		80.00		300.00				380.00
Indian Territory												50.00	50.00
Iowa, northern district							530.00	100.00					630.00
Iowa, southern district		4.70			4.70		382.61	125.00					507.61
Kansas			113.40		113.40			200.00					200.00
Kentucky		253.83			253.83						400.00		400.00
Louisiana, eastern district				1,001.83	1,001.83			10.00					10.00
Louisiana, western district				141.50	141.50		10.00						10.00
Maine	25.00			579.25	604.25	50.00	1,260.00		2.00		150.00		1,462.00
Maryland								81.00	50.00			200.00	281.00
Massachusetts							460.00	550.00	100.00		130.00	591.00	1,831.00
Michigan, eastern district	6,767.90		388.78	1,116.18	8,272.86	2,715.00	1,136.54				400.00		4,251.54
Michigan, western district	96.65			1,743.79	1,840.44		1,300.00	325.00				1,650.00	3,275.00
Minnesota							40.00	250.00		200.00			490.00
Mississippi, northern district							404.10						404.10
Mississippi, southern district													
Missouri, eastern district	3,200.00			2,000.00	5,200.00		662.00	566.61				159.88	1,389.09

Missouri, western district							2,203.43	300.00	100.00		160.00	1,055.50	3,818.93
Montana				11,293.70	11,293.70								
Nebraska				1,918.82	1,918.82		151.05		80.21				231.26
Nevada				287.29	287.29							50.00	50.00
New Hampshire													
New Jersey													
New Mexico			1,200.00		1,200.00							1,179.28	1,179.28
New York, northern district	12,593.00				12,593.00	500.00	1,225.00	675.00			250.00	125.00	2,775 00
New York, southern district	4,640.45			1,253.03	5,893.48	1,325.00		235.00					1,560.00
New York, eastern district													
North Carolina, eastern district							100.00						100.00
North Carolina, western district	510.79				510.79		755.93						755.93
Ohio, northern district	74.10				74.10		1,332.71	910.29					2,243.00
Ohio, southern district			115.00	390.00	505.00		100.00						100.00
Oregon				100.00	100.00	425.00	250.00	350.00	827.82	209.00		900.00	3,061.82
Pennsylvania, eastern district			122.78		122.78		50.00	1.00				10.00	61.00
Pennsylvania, western district				286.88	286.88								
Rhode Island				1,813.16	1,813.16								
South Carolina			98.05		98.05								
Tennessee, eastern district				273.35	273.35		200.47	21.52			371.41		593.40
Tennessee, middle district		194.82		121.34	316.16		1,111.75				669.65	262.25	2,042.65
Tennessee, western district													
Texas, northern district													
Texas, eastern district							100.00	50.00				10.00	160.00
Texas, western district													
Utah			123.16	4,494.90	4,618.06							10,877.25	10,877.25
Vermont						200.00	38.00	369.75			50.00		657.75
Virginia, eastern district			348.23	3,522.80	3,871.03								
Virginia, western district		252.51			252.51							15.00	15.00
Washington Territory	2,226.10			175.00	2,401.10	603.20						301.45	904.65
West Virginia							100.00	540.00			240.85		880.85
Wisconsin, eastern district				502.80	502.80		100.00	103.00				485.00	685.00
Wisconsin, western district				1,215.34	1,215.34					100.00			100.00
Wyoming													
Total	35,852.99	3,370.47	4,296.99	42,558.18	86,078.63	5,968.20	16,121.60	9,501.66	3,571.09	1,184.00	3,713.65	33,717.83	73,778.03

EXHIBIT C 1.—*Statement of the amounts arising from civil suits to which the United States was a party, etc.*—Continued.

Districts.	Amounts realized on fines, forfeitures, and penalties imposed in former years.						Amounts realized on judgments obtained in former years.					Amounts realized during the year by compromise, and otherwise, included in the foregoing.				
	Customs.	Internal revenue.	Post-office.	Pension laws.	Miscellaneous.	Total.	Customs.	Internal revenue.	Post-office.	Miscellaneous.	Total.	Customs.	Internal revenue.	Post-office.	Miscellaneous.	Total.
Alabama, northern district																
Alabama, middle district					$234.24	$234.24										
Alabama, southern district					21.90	21.90				$1,988.63	$1,988.63					
Alaska															$6,084.14	$6,084.14
Arkansas, eastern district			$73.55			73.55			$400.00	816.94	1,216.94					
Arkansas, western district															250.00	250.00
Arizona																
California, northern district					2,400.00	2,400.00	$2,785.00				2,785.00		$47.46			47.46
California, southern district	$100.00		500.00		952.00	1,552.00										
Colorado																
Connecticut																
Dakota																
Delaware														$100.00		100.00
District of Columbia										11,666.40	11,666.40				2,212.57	2,212.57
Florida, northern district					10.00	10.00	220.80			85.00	305.80					
Florida, southern district																
Georgia, northern district		$317.70				317.70		$340.77	130.05	22.14	492.96					
Georgia, southern district																
Idaho																
Illinois, northern district		10.50				10.50			12,101.45		12,101.45					
Illinois, southern district		978.97	452.24	$305.90		1,737.11									2,000.00	2,000.00
Indiana		8.00			20.00	28.00										
Indian Territory																
Iowa, northern district		1,348.00				1,348.00									48.41	48.41
Iowa, southern district		308.74	57.00			365.74										
Kansas			225.00		100.00	325.00										
Kentucky								30.42			30.42					
Louisiana, eastern district							349.49				349.49	$100.48	1,000.00		15.00	1,115.48
Louisiana, western district																
Maine												75.00		1,400.00		1,475.00
Maryland																
Massachusetts																
Michigan, eastern district		60.73				60.73				1,798.35	1,798.35					
Michigan, western district					300.00	300.00				200.00	200.00					
Minnesota										902.76	902.76	1,902.80		1,493.00	797.78	4,193.58
Mississippi, northern district		184.85				184.85										
Mississippi, southern district																
Missouri, eastern district		44.24				44.24				441.30	441.30					
Missouri, western district																

Montana																
Nebraska																
Nevada																
New Hampshire												687.60				687.60
New Jersey															560.00	560.00
New Mexico																
New York, northern district																
New York, southern district							10,254.41				10,254.41	4,102.49	7,847.75		732.29	12,682.53
New York, eastern district															2,772.00	2,772.00
North Carolina, eastern district								272.97			272.97					
North Carolina, western district		717.49				717.49	428.02				428.02					
Ohio, northern district		179.69				179.69										
Ohio, southern district																
Oregon																
Pennsylvania, eastern district												64.74	335.00			399.74
Pennsylvania, western district																
Rhode Island																
South Carolina									958.68		958.68			107.44		107.44
Tennessee, eastern district																
Tennessee, middle district		274.26				274.26		253.75		175.10	428.85		773.30			773.30
Tennessee, western district																
Texas, northern district																
Texas, eastern district																
Texas, western district																
Utah					7,669.70	7,669.70										
Vermont																
Virginia, eastern district															37,965.00	37,965.00
Virginia, western district		100.00				100.00										
Washington Territory		50.00				50.00	1,745.07			633.00	2,378.07				344.84	344.84
West Virginia				131.25		131.25										
Wisconsin, eastern district													166.93			166.93
Wisconsin, western district										2,637.80	2,637.80					
Wyoming															5,000.00	5,000.00
Total	100.00	4,583.17	1,307.79	437.15	11,707.84	18,135.95	15,782.79	897.91	13,590.18	21,367.42	51,638.30	6,938.11	10,170.44	3,100.44	58,772.03	78,976.02

EXHIBIT D.—*Statement showing the number of civil suits to which the United States was not a party, commenced and terminated in the circuit and district courts of the United States during the fiscal year ending June 30, 1889, with the number pending July 1, 1889.*

Districts.	Number commenced during the fiscal year ending June 30, 1889.			Number terminated during the fiscal year ending June 30, 1889.								Number pending July 1, 1889.		
				Admiralty.				Other suits.						
	Admiralty.	Other suits.	Total.	Judgments for plaintiff.	Judgments for defendant.	Dismissed or discontinued.	Total.	Judgments for plaintiff.	Judgments for defendant.	Dismissed or discontinued.	Total.	Admiralty.	Other suits.	Total.
Alabama, northern district		20	20					8	2	9	19		51	51
Alabama, middle district	1	14	15			1	1	21	11	1	33		52	52
Alabama, southern district	23	2	25	10		10	20	1		2	3	3	6	9
Alaska	2	47	49			1	1	14	1	17	32	1	33	34
Arkansas, eastern district		82	82					41		7	48		34	34
Arkansas, western district		20	20					3	2	5	10		39	39
Arizona														
California, northern district	36	114	150	7	6	15	28	66	6	113	185	135	119	254
California, southern district	7	56	63	2	1	2	5	8	1	14	23	4	71	75
Colorado		154	154					55	17	49	121		413	413
Connecticut	4	48	52	2		1	3	8	9	24	41	7	294	301
Dakota														
Delaware	22	5	27	11	1	6	18	4		3	7	26	35	61
District of Columbia														
Florida, northern district		35	35					31	4	8	43	5	35	40
Florida, southern district	37	7	44	26	3	1	30	4			4	11	4	15
Georgia, northern district		40	40					24	2	24	50		87	87
Georgia, southern district	9	25	34	2		4	6	15	1	16	32	8	73	81
Idaho														
Illinois, northern district	35	352	387	16		80	96	131	12	280	423	221	1,776	1,997
Illinois, southern district		86	86					29	5	67	101		196	196
Indiana	2	63	65	1			1	28	12	164	204	3	143	146
Indian Territory		229	229					79		12	91		138	138
Iowa, northern district		73	73	1			1	14	12	50	76	1	168	169
Iowa, southern district		66	66					25	5	27	57		633	633
Kansas		146	146					99	15	199	313		316	316
Kentucky	5	39	44	1	3		4	12	8	11	31	1	27	28
Louisiana, eastern district	96	75	171	33	12	23	68	41	7	30	78	697	160	857
Louisiana, western district		6	6					4	3		7		13	13
Maine	26	9	35	16		4	20	8		14	22	17	104	121
Maryland	1	4	5					4			4	1	11	12
Massachusetts	74	205	279	27	11	21	59	54	55	125	234	146	1,575	1,721
Michigan, eastern district	124	97	221	158	18	19	195	41	14	93	148	703	2,591	3,294
Michigan, western district	47	134	181	35		5	40	20	13	49	82	86	1,147	1,233

Minnesota	4	143	147	10		2	12	42	14	37	93		310	310
Mississippi, northern district		23	23					13	1		14		46	46
Mississippi, southern district		18	18					26	1		27		29	29
Missouri, eastern district	9	96	105	37	3	4	44	49	18	43	110		183	183
Missouri, western district		105	105					43	20	86	149		203	203
Montana		3	3										3	3
Nebraska		245	245					99	18	98	215		272	272
Nevada								9	2	7	18		31	31
New Hampshire		11	11					1	1	3	5		101	101
New Jersey	126	65	191	62		50	112	13	9	36	58		935	935
New Mexico														
New York, northern district	24	110	134	3	1	13	17	12	20	62	94	134	4,887	5,021
New York, southern district	420	2,063	2,483	143	27	*174	344	83	58	†739	880	987	11,180	12,167
New York, eastern district	174	60	234	68	18	81	167	9	15	20	44	1,024	904	1,928
North Carolina, eastern district	5	13	18	2		2	4	18	9	3	30	2	37	39
North Carolina, western district		19	19					35	10	5	50		61	61
Ohio, northern district	26	133	159	4		8	12	30	3	93	126	42	333	375
Ohio, southern district	4	125	129			4	4	84	17	78	129		327	327
Oregon	21	60	81	4		9	13	32	3	13	48	17	88	105
Pennsylvania, eastern district														
Pennsylvania, western district	10	87	97	9	4	4	17	32	12	29	73	29	1,479	1,508
Rhode Island	1	15	16	1			1	49		16	65	5	89	94
South Carolina	16	24	40	8	1	8	17	5	5	26	36	4	53	57
Tennessee, eastern district	3	57	60	5	1	2	8	6	3	3	12		60	60
Tennessee, middle district	2	12	14	2			2			8	8		14	14
Tennessee, western district	4	61	65	1		2	3	9	21	31	61	30	83	113
Texas, northern district		122	122					51	20	69	140		224	224
Texas, eastern district	10	73	83	10	1	1	12	29	9	107	145	12	157	169
Texas, western district		32	32					13	4	7	24		48	48
Utah		940	940					534	80	166	780		588	588
Vermont		15	15					13	2	6	21		36	36
Virginia, eastern district	59	19	78	42	3	7	52		1	5	6	7	16	23
Virginia, western district		45	45					6	7	10	23		64	64
Washington Territory		8	8					4	4		8			
West Virginia	1	30	31	2		5	7	13	4	9	26	6	392	398
Wisconsin, eastern district	26	48	74	6	1	15	22	13	4	35	52	16	157	173
Wisconsin, western district	1	29	30					25	12	37	74		241	241
Wyoming		514	514					204	54	190	448		506	506
Total	1,497	7,676	9,173	767	115	584	1,466	2,446	678	3,490	6,614	4,391	34,481	38,872

* 20 terminated by decree or order.

† 78 terminated by decree or order.

EXHIBIT D (SUPPLEMENT).—*Statement of the amounts of judgments in civil suits to which the United States was not a party, in the circuit and district courts of the United States during the fiscal year ending June* 30, 1889.

Districts.	Amount of judgments for plaintiff.			Amount of judgments for defendant.		
	Admiralty.	Other suits.	Total.	Admiralty.	Other suits.	Total.
Alabama, northern district		$20,892.04	$20,892.04			
Alabama, middle district		71,633.01	71,633.01			
Alabama, southern district	$10,603.30	47,834.99	58,438.29			
Alaska		3,285.82	3,285.82			
Arkansas, eastern district		159,585.00	159,585.00			
Arkansas, western district		11,204.89	11,204.89			
Arizona						
California, northern district	17,037.89	493,710.02	510,747.91		$233.85	$233.85
California, southern district	1,751.81	2,049.40	3,801.21			
Colorado		6,900,602.64	6,900,602.64			
Connecticut	2,778.66	8,028.34	10,807.00		862.50	862.50
Dakota						
Delaware	1,071.71	16,115.82	17,187.53	$732.35		732.35
District of Columbia						
Florida, northern district		6,038,955.51	6,038,955.51			
Florida, southern district	21,638.73	6,888.11	28,526.84			
Georgia, northern district		99,797.51	99,797.51		526.45	526.45
Georgia, southern district	2,745.97	71,842.77	74,588.74		116.90	116.90
Idaho						
Illinois, northern district	16,669.61	706,605.19	723,274.86		22,705.91	22,705.91
Illinois, southern district		15,300,000.00	15,300,000.00			
Indiana	70.00	24,418,188.67	24,418,258.67			
Indian Territory		71,922.39	71,922.39			
Iowa, northern district	603.45	247,749.69	248,353.14		2,548.20	2,548.20
Iowa, southern district		114,782.80	114,782.80		2,945.00	2,945.00
Kansas		640,575.47	640,575.47			
Kentucky	7,700.50	110,797.14	118,497.64	150.00	650.15	800.15
Louisiana, eastern district	56,433.69	266,451.39	322,885.08	20,523.21		20,523.21
Louisiana, western district						
Maine	12,631.24	8,246.55	20,877.79			
Maryland		1,926.23	1,926.23			
Massachusetts	64,056.19	62,000.00	126,056.19	488.13	1,250.00	1,738.13
Michigan, eastern district	75,004.65	205,903.87	280,908.52			
Michigan, western district	7,648.15	165,424.75	173,072.90		720.25	720.25
Minnesota	25,215.24	92,756.06	117,971.30		8,017.63	8,017.63
Mississippi, northern district		30,937.14	30,937.14			
Mississippi, southern district		55,818.39	55,818.39			
Missouri, eastern district	16,267.82	205,545.38	221,813.20			
Missouri, western district		591,279.43	591,279.43			
Montana						
Nebraska		466,673.13	466,673.13		65,137.14	65,137.14
Nevada		1,747.00	1,747.00		74.45	74.45
New Hampshire		5,565.00	5,565.00			
New Jersey	17,756.51	36,419.05	54,175.56		1,109.00	1,109.00
New Mexico						
New York, northern district	1,659.46	8,906,561.52	8,908,220.98		7,357.00	7,357.00
New York, southern district	239,421.18	1,736,273.16	1,975,694.34	7,039.85	24,181.53	31,221.38
New York, eastern district	2,918.18	1,979.30	4,897.48		1,681.21	1,681.21
North Carolina, eastern dist	1,793.00	49,969.90	51,762.90			
North Carolina, western dist		66,171.10	66,171.10		101.80	101.80
Ohio, northern district	483.12	755,839.06	756,322.18			
Ohio, southern district		558,112.57	558,112.57		5,860.42	5,860.42
Oregon	20,266.34	125,173.34	145,439.68		175.75	175.75
Pennsylvania, eastern district						
Pennsylvania, western district	20,551.92	256,867.20	277,419.12		784.82	784.82
Rhode Island	2,478.32	41,853.62	44,331.94			
South Carolina	18,724.22	9,942.10	28,666.32		281.03	281.03
Tennessee, eastern district	1,754.53	10,998.18	12,752.71		1,855.73	1,855.73
Tennessee, middle district	599.96		599.96		413.53	413.53
Tennessee, western district	2,260.15	47,500.00	49,760.15			
Texas, northern district		442,053.26	442,053.26		26,296.00	26,296.00
Texas, eastern district	7,172.19	28,126.05	35,298.24		25.00	25.00
Texas, western district		56,159.32	56,159.32			
Utah		412,393.00	412,393.00		12,046.20	12,046.20
Vermont		158,168.36	158,168.36			
Virginia, eastern district	25,000.19	437.50	25,437.69			
Virginia, western district		4,422.94	4,422.94		122.80	122.80
Washington Territory						
West Virginia		37,353.44	37,353.44			
Wisconsin, eastern district	550.54	36,258.75	36,809.29	84.80	415.97	500.77
Wisconsin, western district		13,279.77	13,279.77		1,319.10	1,319.10
Wyoming		338,982.88	338,982.88		34,949.32	34,949.32
Total	703,318.42	71,854,616.91	72,557,935.33	29,018.34	224,764.64	253,782.98

EXHIBIT F.—*General statement of all the appropriations placed under the Department of Justice which were available, and those from which payments were made, during the fiscal year ending June 30, 1889, as required by section 3, act of June 30, 1879.*

Expenses of United States courts, 1879 and prior years:			
Deficiency appropriation, act of October 19, 1888		$128.04	
Re-appropriated		327.26	
		455.30	
Payments during fiscal year		455.30	
Funeral expenses of late Chief-Justice Morrison R. Waite:			
Repayment			$18.33
Support of prisoners, 1880:			
Re-appropriated		455.00	
Payments during fiscal year		455.00	
Fees and expenses of marshals, 1881 and prior years:			
Balance July 1, 1888		2,334.21	
Carried to surplus fund	$1,999.64		
To certified claims	334.57		
		2,334.21	
Fees of witnesses, 1881 and prior years:			
Balance July 1, 1888		59.95	
Transferred to certified claims		59.95	
Fees of clerks, 1881 and prior years:			
Balance July 1, 1888		18.35	
Payments during fiscal year		18.35	
Fees of commissioners, 1881 and prior years:			
Balance July 1, 1888		25.05	
Payments during fiscal year		25.05	
Miscellaneous expenses, 1881 and prior years:			
Balance July 1, 1888		825.30	
Transferred to certified claims		825.30	
Fees and expenses of marshals, 1882 and prior years:			
Balance July 1, 1888		1,774.13	
Payments during fiscal year	$1,557.51		
Transferred to certified claims	216.62		
		1,774.13	
Fees of witnesses, 1883 and prior years:			
Balance July 1, 1888		37.50	
Payments during fiscal year		37.50	
Uniform system of book-keeping for United States courts:			
Balance July 1, 1888		3,773.41	
Balance July 1, 1889			3,773.41
Fees and expenses of marshals, 1883 and prior years:			
Balance July 1, 1888		9,283.81	
Payments during fiscal year	$35.72		
To surplus fund	1,017.71		
To certified claims	8,230.38		
		9,283.81	
Support of prisoners, 1883 and prior years:			
Balance July 1, 1888		7.45	
Transferred to certified claims		7.45	
Contingent expenses, Department of Justice; horses and wagons, 1883:			
Deficiency appropriation, act of October 19, 1888		200.00	
Payments during fiscal year		200.00	

Repairs to court-house, Washington, D. C., 1883:			
Deficiency appropriation, act of October 19, 1888		$6.72	
Payments during fiscal year		6.72	
Fees and expenses of marshals, 1884:			
Balance July 1, 1888		1,979.34	
Payments during fiscal year	$636.55		
To surplus fund	1,342.79		
		1,979.34	
Fees of witnesses, 1884:			
Balance July 1, 1888		321.50	
Balance July 1, 1889			$321.50
Rent of court-house rooms, 1884:			
Balance July 1, 1888		73.00	
To surplus fund		73.00	
Contingent expenses, Department of Justice; miscellaneous items, 1884:			
Balance due July 1, 1888		3.75	
To surplus fund		3.75	
Fees and expenses of marshals, 1885 and prior years:			
Balance July 1, 1888		3,082.84	
Payments during fiscal year		3,082.84	
Fees of clerks, 1885 and prior years:			
Balance July 1, 1888		93.30	
Payments during fiscal year		93.30	
Fees of commissioners, 1885 and prior years:			
Balance July 1, 1888		23.85	
Payments during fiscal year		23.85	
Support of prisoners, 1885 and prior years:			
Balance July 1, 1888		1,185.75	
Transferred to certified claims		1,185.75	
Miscellaneous expenses, 1885 and prior years:			
Balance July 1, 1888			77.92
Payments during fiscal years	$45.00		
Transferred to certified claims	32.92		
		77.92	
Fees and expenses of marshals, 1885:			
Balance July 1, 1888		29.77	
To surplus fund		29.77	
Fees of clerks, 1885:			
Balance July 1, 1888		11,139.51	
Payments during fiscal year	$68.90		
To surplus fund	8,369.64		
		8,438.54	
Balance July 1, 1889			2,700.97
Fees of commissioners, 1885:			
Balance July 1, 1888		300.75	
Payments during fiscal year		52.55	
Balance July 1, 1889			248.20
Expenses of Territorial courts in Utah, 1885:			
Balance July 1, 1888	$40.25		
Deficiency appropriation, act October 19, 1888	5,644.82		
		5,685.07	
Payments during fiscal year	5,344.92		
To surplus fund	40.25		
		5,385.17	
Balance July 1, 1889			299.90

Contingent expenses Department of Justice; miscellaneous items, 1885:			
Balance July 1, 1888		$82.68	
To surplus fund		82.68	
Fees and expenses of marshals, 1886:			
Balance July 1, 1888	$3,511.36		
Deficiency appropriation, act of October 19, 1888	40,000.00		
Repayment	2,179.96		
		45,691.32	
Payments during fiscal year		19,524.99	
Balance July 1, 1889			$26,166.33
Fees of district attorneys, 1886:			
Balance July 1, 1888	$40.18		
Deficiency appropriation, act of October 19, 1888	4,454.07		
Repayment	73.12		
		4,567.37	
Payments during fiscal year		4,439.07	
Balance July 1, 1889			128.30
Fees of commissioners, 1886:			
Balance July 1, 1888		2,715.49	
Payments during fiscal year		629.40	
Balance July 1, 1889			2,086.09
Fees of clerks, 1886:			
Deficiency appropriation, act of October 19, 1888		7,500.00	
Payments during fiscal year		6,833.88	
Balance July 1, 1889			666.12
Fees of jurors, 1886:			
Balance July 1, 1888		13,122.31	
Payments during fiscal year		12,305.96	
Balance July 1, 1889			816.35
Fees of witnesses, 1886:			
Balance July 1, 1888		15,603.73	
Payments during fiscal year		12,192.24	
Balance July 1, 1889			3,411.49
Support of prisoners, 1886:			
Balance July 1, 1888	$248.42		
Deficiency appropriation, act of October 19, 1888	12,675.64		
		12,924.06	
Payments during fiscal year		12,868.19	
Balance July 1, 1889			55.87
Miscellaneous expenses, 1886:			
Balance July 1, 1888		11,668.05	
Payments during fiscal year	$2,106.01		
To surplus fund	8,006.52		
		10,112.53	
Balance July 1, 1889			1,555.52
Rent of court-rooms, 1886:			
Balance July 1, 1888		167.51	
Payments during fiscal year		150.00	
Balance July 1, 1889			17.51
Expenses of Territorial courts in Utah, 1886:			
Balance July 1, 1888	$9,718.56		
Deficiency appropriation, act of October 19, 1888	2,866.67		
		12,585.23	
Payments during fiscal year		2,613.44	
Balance July 1, 1889			9,971.79

Digest of Opinions of Attorneys-General:			
Balance July 1, 1888		$1,000.00	
Balance July 1, 1889			$1,000.00
Contingent expenses Department of Justice; books for Department library, 1886:			
Balance July 1, 1888		6.50	
Balance July 1, 1889			6.50
Fees and expenses of marshals, 1886, and prior years:			
Deficiency appropriation, act of October 19, 1888	$2,127.21		
Repayments	7,327.37		
		9,454.58	
Payments during fiscal year	2,091.71		
To transfer account	106.05		
To certified claims	35.50		
To surplus fund	7,221.32		
		9,454.58	
Fees of jurors, 1886 and prior years:			
Deficiency appropriation, act of October 19, 1888	510.40		
Deficiency appropriation, act of March 2, 1889	1,045.60		
Repayments	3,838.57		
		5,394.57	
Payments during fiscal year	715.75		
To certified claims	161.20		
To surplus fund	3,778.87		
		4,655.82	
Balance July 1, 1889			738.75
Fees of witnesses, 1886 and prior years:			
Deficiency appropriation, act of October 19, 1888	$4,434.00		
Deficiency appropriation, act of March 2, 1889	2,262.20		
Repayments	10,720.40		
		17,776.60	
Payments during fiscal year	421.40		
To surplus fund	14,778.10		
		15,199.50	
Balance July 1, 1889			2,567.10
Support of prisoners, 1886 and prior years:			
Deficiency appropriation, act October 19, 1888	$248.28		
Deficiency appropriation, act March 2, 1889	10,812.65		
Repayments	2,676.20		
		13,737.13	
Payments during fiscal year	2,633.28		
To surplus fund	2,640.20		
		5,273.48	
Balance July 1, 1889			8,463.65
Miscellaneous expenses, 1886 and prior years:			
Deficiency appropriation, act October 19, 1888	$785.72		
Repayments	4,191.45		
		4,977.17	
Payments during fiscal year	693.37		
To surplus fund	4,283.80		
		4,977.17	
Miscellaneous expenses, 1886 and prior years; transfer account:			
Repayments		142.35	
Payments during fiscal year		142.35	

Expenses of Territorial courts in Utah, 1886 and prior years:			
Deficiency appropriation, act of October 19, 1888		$9,085.84	
Payments during fiscal year		9,085.84	
Contingent expenses, Department of Justice; miscellaneous items, 1886 and prior years:			
Repayment		47.01	
To surplus fund		47.01	
Constructing elevator, etc., Department of Justice, 1886 and prior years:			
Repayment		6.03	
To surplus fund		6.03	
Support of convicts, 1886 and prior years:			
Repayments		200.69	
To surplus fund		200.69	
Fees of clerks, 1886 and prior years:			
Deficiency appropriation, act October 19, 1888		604.50	
Payments during fiscal year	$152.75		
To surplus fund	451.75		
		604.50	
Fees of commissioners, 1886 and prior years:			
Deficiency appropriation, act October 19, 1888		255.00	
Payments during fiscal year	$213.00		
To certified claims	42.00		
		255.00	
Fees of district attorneys, 1886 and prior years:			
Deficiency appropriation, act March 2, 1889		876.47	
Payments during fiscal year		713.77	
Balance July 1, 1889			$152.70
Fees and expenses of marshals, 1887:			
Balance July 1, 1888	$7,959.78		
Deficiency appropriation, act October 19, 1888	50,000.00		
Repayments	6,222.07		
		64,181.85	
Payments during fiscal year		41,565.30	
Balance July 1, 1889			22,616.55
Fees of district attorneys, 1887:			
Balance July 1, 1888	$0.80		
Deficiency appropriation, act October 19, 1888	55,392.73		
Deficiency appropriation, act March 2, 1889	3,395.15		
		58,788.68	
Payments during fiscal year		54,771.21	
Balance July 1, 1889			4,017.47
Fees of clerks, 1887:			
Balance July 1, 1888	$3,967.74		
Repayment	152.60		
		4,120.34	
Payments during fiscal year	1,456.70		
To surplus fund	2,663.64		
		4,120.34	
Fees of commissioners, 1887:			
Balance July 1, 1888	$0.14		
Deficiency appropriation, act October 19, 1888	19,757.35		
		19,757.49	
Payments during fiscal year		19,756.67	
Balance July 1, 1889			.82

Fees of jurors, 1887:			
Balance July 1, 1888	$43,738.83		
Repayments	9,794.31		
		$53,533.14	
Payments during fiscal year		8,734.75	
Balance July 1, 1889			$44,798.39
Fees of witnesses, 1887:			
Balance, July 1, 1888	$69,549.60		
Repayments	10,132.12		
		79,681.72	
Payments during fiscal year		13,521.14	
Balance July 1, 1889			66,160.58
Support of prisoners, 1887:			
Deficiency appropriation, act October 19, 1888	$25,000.00		
Deficiency appropriation, act March 2, 1889	7,601.72		
Repayments	5,696.70		
		38,298.42	
Payments during fiscal year		25,076.48	
Balance July 1, 1889			13,221.94
Rent of court-rooms, 1887:			
Balance July 1, 1888		2,130.44	
Payments during fiscal year		727.50	
Balance July 1, 1889			1,402.94
Miscellaneous expenses, 1887:			
Balance July 1, 1888	$19,100.08		
Deficiency appropriation, act March 2, 1889	61.78		
Repayments	5,433.68		
		24,595.54	
Payments during fiscal year	5,211.75		
To surplus fund	19,322.01		
		24,533.76	
Balance July 1, 1889			61.78
Salaries, Department of Justice, 1887:			
Balance July 1, 1888		2,028.03	
To surplus fund		2,028.03	
Defending suits in claims against the United States, 1887:			
Balance July 1, 1888	$5,983.69		
Repayments	313.40		
		6,297.09	
To surplus fund		6,297.09	
Prosecution and collection of claims, 1887:			
Balance July 1, 1888		500.00	
To surplus fund		500.00	
Traveling expenses, Territory of Alaska, 1887:			
Balance July 1, 1888		1,500.00	
Payments during fiscal year	$45.00		
To surplus fund	1,455.00		
		1,500.00	
Rent and incidental expenses, office of Marshal, Territory of Alaska, 1887:			
Balance July 1, 1888	$651.68		
Repayments	9.95		
		661.63	
To surplus fund		661.63	
Support of insane convicts, 1887:			
Balance July 1, 1888		702.00	
Payments during fiscal year		702.00	

Support of convicts, 1887:		
Balance July 1, 1888		$2,403.67
To surplus fund		2,403.67
Expenses Territorial courts, Utah, 1887:		
Balance July 1, 1888	$1.12	
Deficiency appropriation, act October 19, 1888	10,016.81	
Deficiency appropriation, act March 2, 1889	1,076.00	
Repayments	349.69	
		11,443.62
Payments during fiscal year		11,443.46
Balance July 1, 1889		
Building, Department of Justice, 1887:		
Balance July 1, 1888		122.08
To surplus fund		122.08
Postage, Department of Justice, 1887:		
Balance July 1, 1888		95.00
To surplus fund		95.00
Repairs to court-house, Washington, D. C., 1887:		
Balance July 1, 1888		3.16
To surplus fund		3.16
Prosecution of crimes, 1887:		
Balance July 1, 1888		542.40
Payments during fiscal year	$205.28	
To surplus fund	337.12	
		542.40
Punishing violations of intercourse acts, etc., 1887:		
Balance July 1, 1888		1,205.88
To surplus fund		1,205.88
Prosecution of crimes, Territory of Utah:		
By transfer		2,957.00
Payment during fiscal year		1,691.00
Balance July 1, 1889		1,2
Contingent expenses, Department of Justice, furniture and repairs, 1887:		
Balance July 1, 1888		168.05
To surplus fund		168.05
Contingent expenses, Department of Justice; stationery, 1887:		
Balance July 1, 1888	$2.95	
Repayment	.10	
		3.05
Payment during fiscal year	.80	
To surplus fund	2.25	
		3.05
Contingent expenses, Department of Justice; transportation, 1887:		
Balance July 1, 1888		146.90
To surplus fund		146.90
Contingent expenses, Department of Justice; miscellaneous items, 1887:		
Balance July 1, 1888		16.08
Balance July 1, 1889		
Fees and expenses of marshals, 1888:		
Balance July 1, 1888	$32,801.36	
Deficiency appropriation, act March 2, 1889	50,000.00	
Repayments	16,600.57	
		99,401.93
Payments during fiscal year		96,527.09
Balance July 1, 1889		2,8

Fees of district attorneys, 1888:			
Balance July 1, 1888	$15,844.76		
Deficiency appropriation, act October 19, 1888	41,043.21		
Deficiency appropriation, act March 2, 1889	18,720.10		
		$75,608.07	
Payments during fiscal year	71,651.42		
To surplus fund	2,150.10		
		73,801.52	
Balance July 1, 1889			$1,806.55
Pay of assistant attorneys, 1888:			
Balance July 1, 1888	$3,400.89		
Deficiency appropriation, act October 19, 1889	41,025.00		
Deficiency appropriation, act March 2, 1889	3,718.66		
		48,144.55	
Payments during fiscal year		48,144.55	
Fees of clerks, 1888:			
Balance July 1, 1888	$58,701.93		
Deficiency appropriation, act March 2, 1889	10,000.00		
Repayment	150.15		
		68,852.08	
Payments during fiscal year		68,852.08	
Fees of commissioners, 1888:			
Deficiency appropriation, act October 19, 1888	$52,498.72		
Deficiency appropriation, act March 2, 1889	15,000.00		
		67,498.72	
Payments during fiscal year		66,640.54	
Balance July 1, 1889			858.18
Fees of jurors, 1888:			
Balance July 1, 1888	$53,334.60		
Repayments	58,092.47		
		111,427.07	
Payments during fiscal year		25,601.20	
Balance July 1, 1889			85,825.87
Fees of witnesses, 1888:			
Balance July 1, 1888	$43,081.35		
Repayments	49,964.72		
		93,046.07	
Payments during fiscal year		53,838.79	
Balance July 1, 1889			39,207.28
Support of prisoners, 1888:			
Balance July 1, 1888	$15,408.41		
Deficiency appropriation, act March 2, 1889	14,168.64		
Repayments	35,944.39		
		65,521.44	
Payments during fiscal year		52,311.26	
Balance July 1, 1889			13,210.18
Rent of court-rooms, 1888:			
Balance July 1, 1888	$10,704.91		
Deficiency appropriation, act October 19, 1888	11,310.00		
		22,014.91	
Payments during fiscal year		18,664.81	
Balance July 1, 1889			3,350.10

Pay of bailiffs, etc., 1888:			
Balance July 1, 1888	$53.75		
Deficiency appropriation, act October 19, 1888	25,000.00		
Repayments	13,465.32		
		$38,519.07	
Payments during fiscal year		16,832.25	
Balance July 1, 1889			$21,686.82
Miscellaneous expenses, 1888:			
Balance July 1, 1888	$73,920.39		
Repayments	18,216.87		
		92,137.26	
Payments during fiscal year		13,719.92	
Balance July 1, 1889			78,417.34
Salaries, Department of Justice, 1888:			
Balance July 1, 1888		985.21	
Balance July 1, 1889			985.21
Traveling expenses, Territory of Alaska, 1888:			
Balance July 1, 1888		1,000.00	
Payments during fiscal year		125.50	
Balance July 1, 1889			874.50
Prosecution and collection of claims, 1888:			
Balance July 1, 1888		500.00	
Payment during fiscal year		50.00	
Balance July 1, 1889			450.00
Defending suits in claims against the United States, 1888:			
Balance July 1, 1888		1,939.25	
Balance July 1, 1889			1,939.25
Support of convicts, 1888:			
Balance July 1, 1888	$13,919.75		
Repayment	120.65		
		14,040.40	
Payments during fiscal year		6,739.82	
Balance July 1, 1889			7,300.58
Postage, Department of Justice, 1888:			
Balance July 1, 1888		95.00	
Balance July 1, 1889			95.00
Rent and incidental expenses, office of marshal, Territory of Alaska, 1888:			
Repayments		203.15	
Payments during fiscal year		1.00	
Balance July 1, 1889			202.15
Expenses of Territorial courts in Utah, 1888:			
Balance July 1, 1888	$2.10		
Deficiency appropriation, act of October 19, 1888	15,000.00		
Deficiency appropriation, act of March 2, 1889	5,326.55		
Repayments	696.77		
		21,025.42	
Payments during fiscal year		20,328.65	
Balance July 1, 1889			696.77
Punishing violations of intercourse acts, etc., 1888:			
Balance July 1, 1888		1,756.13	
Payments during fiscal year		420.00	
Balance July 1, 1889			1,336.13

Contingent expenses, Department of Justice; miscellaneous items, 1888:			
Balance July 1, 1888	$656.50		
Repayments	61.61		
		$718.11	
Balance July 1, 1889			$718.11
Contingent expenses, Department of Justice; stationery, 1888:			
Balance July 1, 1888	$538.17		
Repayments	25.00		
		563.17	
Payment during fiscal year		5.05	
Balance July 1, 1889			558.12
Building, Department of Justice, 1888:			
Balance July 1, 1888		260.90	
Payments during fiscal year		20.75	
Balance July 1, 1889			240.15
Contingent expenses, Department of Justice; furniture and repairs, 1888:			
Repayment		4.68	
Balance July 1, 1889			4.68
Prosecution of crimes, 1888:			
Repayments		345.92	
Payments during fiscal year		214.04	
Balance July 1, 1889			131.88
Repairs to court-house, District of Columbia, 1888:			
Balance July 1, 1888		21.53	
Payments during fiscal year		21.53	
Defending suits in claims against the United States, 1888:			
Balance July 1, 1888	$0.82		
Deficiency appropriation, act of October 19, 1888	129.17		
		129.99	
Payment during fiscal year		129.17	
Balance July 1, 1889			.82
Contingent expenses, Department of Justice; transportation, 1888:			
Balance July 1, 1888	$53.95		
Repayment	29.15		
		83.10	
Balance July 1, 1889			83.10
Fees of supervisors of elections:			
Appropriation, warrant June 29, 1889	$258,732.31		
Repayments	3,370.00		
		262,102.31	
Payments during fiscal year		262,102.31	
Fees and expenses of marshals, 1889:			
Act of October 2, 1888	$675,000.00		
Repayments	1,002.63		
		676,002.63	
Payments during fiscal year		530,979.83	
Balance July 1, 1889			145,022.80
Fees of district attorneys, 1889:			
Act of October 2, 1888	$225,000.00		
Deficiency appropriation, act March 2, 1889	15,000.00		
Repayment	1,000.00		
		241,000.00	
Payments during fiscal year		181,958.78	
Balance July 1, 1889			59,041.22

Special compensation of district attorneys, 1889:			
Act of October 2, 1888		$5,000.00	
Payments during fiscal year		4,927.23	
Balance July 1, 1889			
Pay of regular assistant attorneys, 1889:			
Act of October 2, 1888		105,000.00	
Payments during fiscal year		80,700.16	
Balance July 1, 1889			24,
Pay of special assistant attorneys, 1889:			
Act of October 2, 1888		20,000.00	
Payments during fiscal year		19,522.55	
Balance July 1, 1889			
Fees of clerks, 1889:			
Act of October 2, 1888		175,000.00	
Payments during fiscal year		127,978.41	
Balance July 1, 1889			47,
Fees of commissioners, 1889:			
Appropriation, act of October 2, 1888		100,000.00	
Payments during fiscal year		70,668.85	
Balance July 1, 1889			29,
Fees of jurors, 1889:			
Appropriation, act of October 2, 1888	$650,000.00		
Repayments	17,267.50		
		667,267.50	
Payments during fiscal year		624,788.20	
Balance July 1, 1889			42,
Fees of witnesses, 1889:			
Appropriation, act of October 2, 1888	$900,000.00		
Repayments	16,789.54		
		916,789.54	
Payments during fiscal year		912,638.50	
Balance July 1, 1889			4,
Support of prisoners, 1889:			
Appropriation, act of October 2, 1888	$300,000.00		
Deficiency appropriation, act of March 2, 1889	50,000.00		
Repayments	7,395.08		
		357,395.08	
Payments during fiscal year		344,186.11	
Balance July 1, 1889			13,
Rent of court-rooms, 1889:			
Appropriation, act of October 2, 1888		75,000.00	
Payments during fiscal year		46,610.35	
Balance July 1, 1889			28,
Pay of bailiffs, etc., 1889:			
Appropriation, act of October 2, 1888	$135,600.00		
Transfer appropriation warrant	3,243.52		
Repayment	1,765.59		
		140,609.11	
Payments during fiscal year		140,519.27	
Balance July 1, 1889			
Miscellaneous expenses, 1889:			
Appropriation, act of October 2, 1888	$140,000.00		
Deficiency appropriation, act of March 2, 1889	10,000.00		
Repayments	1,450.41		
		151,450.41	
Payments during fiscal year		144,996.46	
Balance July 1, 1889			6,

Salaries, Department of Justice, 1889:			
Appropriation, act of July 11, 1888		$142,480.87	
Payments during fiscal year		141,225.70	
Balance July 1, 1889			$1,225.17
Salaries, employés of court-house, District of Columbia, 1889:			
Appropriation, act of July 11, 1888		11,760.00	
Payments during fiscal year		11,760.00	
Salary, warden of jail, District of Columbia, 1889:			
Appropriation, act of July 11, 1888		1,800.00	
Payments during fiscal year		1,800.00	
Prosecution and collection of claims, 1889:			
Appropriation, act of October 2, 1888		500.00	
Balance July 1, 1889			500.0
Defending suits in claims against United States, 1889:			
Appropriation, act of October 2, 1888		10,000.00	
Payments during fiscal year		10,000.00	
Support of convicts, 1889:			
Appropriation, act of October 2, 1888		15,000.00	
Payments during fiscal year		14,454.80	
Balance July 1, 1889			545.2
Expenses of Territorial courts in Utah, 1889:			
Appropriation, act of October 2, 1888	$35,000.00		
Repayment	150.45		
		35,150.45	
Payments during fiscal year		34,896.70	
Balance July 1, 1889			253.7
Punishing violations of intercourse acts, etc., 1889:			
Appropriation, act of October 2, 1888		5,000.00	
Payments during fiscal year		3,242.56	
Balance July 1, 1889			1,757.4
Repairs to court-house, District of Columbia, 1889:			
Appropriation, act of October 2, 1888		3,400.00	
Payments during fiscal year		3,400.00	
Prosecution of crimes, 1889:			
Appropriation, act of October 2, 1888		30,000.00	
Payments during fiscal year		29,864.42	
Balance July 1, 1889			135.
Contingent expenses, Department of Justice; furniture and repairs, 1889:			
Appropriation, act of July 11, 1888		1,000.00	
Payments during fiscal year		1,000.00	
Contingent expenses, Department of Justice; books for Department library, 1889:			
Appropriation, act of July 11, 1888		2,500.00	
Payments during fiscal year		2,500.00	
Contingent expenses, Department of Justice; books for solicitor's office, 1889:			
Appropriation, act of July 11, 1888		500.00	
Payments during fiscal year		500.00	
Contingent expenses, Department of Justice; stationery, 1889:			
Appropriation, act of July 11, 1888		1,900.00	
Payments during fiscal year		1,800.00	
Balance July 1, 1889			100.0

Contingent expenses, Department of Justice; transportation, 1889:			
Appropriation, act of July 11, 1888		$500.00	
Payments during fiscal year		400.00	
Balance July 1, 1889			$100.00
Postage, Department of Justice, 1889:			
Appropriation, act of July 11, 1888		100.00	
Balance July 1, 1889			100.00
Contingent expenses, Department of Justice: miscellaneous items, 1889.			
Appropriation, act of July 11, 1888		7,160.00	
Payments during fiscal year		7,160.00	
Defending suits in claims against the District of Columbia, 1889.			
Appropriation, act of July 18, 1888		2,500.00	
Payments during fiscal year		497.75	
Balance July 1, 1889			2,002.25
Expenses of United States court, Indian Territory, 1889:			
Deficiency appropriation, act of March 2, 1889		5,300.00	
Payments during fiscal year		4,314.00	
Balance July 1, 1889			986.00
Building, Department of Justice, 1889:			
Appropriation, act of October 2, 1888		300.00	
Payments during fiscal year		161.08	
Balance July 1, 1889			138.92
Traveling expenses, Territory of Alaska, 1889:			
Appropriation, act of October 2, 1888		1,000.00	
Payments during fiscal year		154.00	
Balance July 1, 1889			846.00
Rent and incidental expenses, office of marshal, Territory of Alaska, 1889:			
Appropriation, act of October 2, 1888		500.00	
Payments during fiscal year		88.12	
Balance July 1, 1889			411.88
Repairing for occupancy fifth floor rooms, Department of Justice building:			
Appropriation, act of August 4, 1886		3,500.00	
Payments during fiscal year		3,450.00	
Balance July 1, 1889			50.00
Fitting up fire-proof record room, Department of Justice building:			
Balance July 1, 1888		1,562.50	
Payments during fiscal year		1,282.92	
Balance July 1, 1889			279.58
Defense in French spoliation claims:			
Balance July 1, 1888	$1,688.21		
Appropriation, act of October 2, 1888	5,000.00		
		6,688.21	
Payments during fiscal year		5,400.00	
Balance July 1, 1889			1,288.21
Pay of special deputy marshals at Congressional elections:			
Appropriation, act of March 2, 1889	$124,000.00		
Repayments	480.00		
		124,480.00	
Payments during fiscal year		123,135.00	
Balance July 1, 1889			1,345.00

EXHIBIT F 1.—*A statement showing the expenses of the United States courts incurred in the fiscal year* 1887 *and paid in the fiscal year* 1889, *advances to marshals, and payments upon certificates from the Treasury Department.*

Judicial district.	Marshals.	Jurors.	Witnesses.	Prisoners.	Miscellaneous.	Attorneys.	Clerks.	Commissioners.	Rents.	Total.
Alabama, northern district			$32.10			$50.90		$806.75		$889.75
Alabama, middle district	$2,132.41		180.55	$297.53	$30.00			55.35		2,695.84
Alabama, southern district	109.76					39.83		107.00		256.59
Alaska		$229.30	6.40	4,121.49	102.90	750.00				5,210.09
Arizona	5,145.91					768.00		52.15		5,966.06
Arkansas, eastern district				25.00		1,025.00		15.35		1,065.35
Arkansas, western district	2,560.00		821.60	2,466.35	751.62			638.00		7,177.57
California					119.81	2,597.10				2,716.91
Colorado	295.95			623.75		371.00		25.45	$75.00	1,391.15
Connecticut						255.00		109.55		364.55
Dakota	114.50	16.00	26.00			195.15				351.65
Delaware										
District of Columbia supreme court		134.00	8.75			1,500.00		122.80		1,765.55
Florida, northern district				12.00		10.00		128.35		150.35
Florida, southern district						220.00				220.00
Georgia, northern district			58.80			400.00		287.20		746.00
Georgia, southern district	127.64	16.30		411.80	200.00	560.00		165.40		1,481.14
Idaho		858.80				55.00		10.55	237.50	1,161.85
Illinois, northern district	32.61		11.65	1,372.40	46.80	1,479.53		5.00		2,947.99
Illinois, southern district			80.76			745.45		95.05		921.26
Indiana				.80	30.00	555.00	$90.10	97.85		773.75
Iowa, northern district	883.32	2,067.50	451.83	89.05	10.00	895.40		119.25		4,016.35
Iowa, southern district		165.10	950.64					86.55		1,202.29
Kansas					50.00	26.00		839.95		915.95
Kentucky	680.21			2,680.94				1,519.45		4,850.60
Louisiana, eastern district					3.75	1,395.00		440.55		1,839.30
Louisiana, western district						81.40		7.10		88.50
Maine	169.06					597.60		80.45		847.11
Maryland	50.00			88.95		620.00		8.70		767.65
Massachusetts				568.92		1,100.60		717.10		2,386.62
Michigan, eastern district	261.00					867.60		48.85		1,177.45
Michigan, western district	178.90					912.80		22.30		1,114.00
Minnesota	249.67		58.20	751.55		4,544.80	536.40	1,062.95		7,203.57
Mississippi, northern district				178.10		395.00		11.65		584.75
Mississippi, southern district										
Missouri, eastern district			288.90			20.00	58.10	59.53		426.53
Missouri, western district	3,776.42		127.40	1,982.55		1,136.04	152.60	1,680.25		8,855.26
Montana			64.00		42.72	796.80		4.00		907.52
Nebraska	977.15					908.90		54.25		1,940.30
Nevada	106.67					209.60		16.80		333.07
New Hampshire						80.00		.10		80.10
New Jersey				801.48		512.90		359.35		1,673.42

New Mexico	1,033.43	165.95	497.45	7.50	225.00	1,100.00	273.20	59.75		3,362.28
New York, northern district	96.80			31.54		1,664.40		1,870.70		3,663.44
New York, eastern district	60.00		138.00	164.88		2,380.00		128.44		2,861.82
New York, southern district			223.00							223.00
North Carolina, eastern district			30.70	133.00		250.00	54.80	128.35		596.85
North Carolina, western district		10.00	51.40	31.65	5.00			3,034.50		3,132.55
Ohio, northern district						806.60		11.25		817.85
Ohio, southern district	135.86		10.30	480.25		842.00		114.35		1,582.76
Oregon				407.94		1,500.00		145.60		2,053.54
Pennsylvania, eastern district						1,640.00		27.80		1,667.80
Pennsylvania, western district				227.85		343.40		37.00		608.25
Rhode Island	181.00	88.00			12.00	895.00		1.75		1,177.75
South Carolina				3,003.40		1,342.96		446.70		4,793.06
Tennessee, eastern district	4,102.03	626.00	646.80	8.80		20.00	103.35	712.93		6,219.91
Tennessee, middle district	72.40			54.55	18.60			348.60		494.15
Tennessee, western district	583.16					3,035.60		237.90		3,856.66
Texas, northern district	162.07		239.51	10.35		268.50		492.80		1,173.23
Texas, eastern district	2.54	2,500.00	1,200.00	50.39		923.80		14.70		4,691.43
Texas, western district	2,023.92	23.20	108.20			1,534.00		267.95		3,957.27
Utah	10,756.20		2,815.45		1,216.70	3,069.85		515.80	150.00	18,524.00
Vermont						92.60				92.60
Virginia, eastern district	449.04			59.40	2,069.95	1,091.40		217.35		3,887.14
Virginia, western district	4,612.31	728.10	4,297.65	853.63	71.56	492.40		694.35	250.00	12,000.00
West Virginia			20.20		27.00	1,117.40		37.10		1,201.70
Washington		1,106.50	138.60	3,019.89	178.34	893.00	75.00	287.10	15.00	5,713.43
Wisconsin, eastern district						614.40	113.65	60.85		788.90
Wisconsin, western district						1,520.00				1,520.00
Wyoming	8.36					657.40		6.90		667.66
Total	41,565.30	8,734.75	13,521.04	25,076.48	5,211.75	54,771.21	1,456.70	19,756.67	727.50	170,821.40

EXHIBIT F 2.—*A statement showing the expenses of the United States courts incurred in the fiscal year* 1888 *and paid in the fiscal year* 1889; *advances to marshals on requisitions, and payments upon certificates from the Treasury Department.*

Judicial district.	Marshals.	Jurors.	Witnesses.	Prisoners.	Bailiffs.	Miscellaneous.	Assistant attorneys.	Attorneys.	Clerks.	Commissioners.	Rents.	Total.
Alabama, northern district	$3,865.11			$511.30	$381.25		$800.00		$411.90	$2,924.15	$875.00	$9,768.71
Alabama, middle district	4,792.00		$115.80	81.49		$117.58			1,651.50	1,565.36		8,323.73
Alabama, southern district	3,419.64		.90					$1,563.80	879.30	1,157.95		7,021.59
Alaska			1,005.80				250.00			221.10	125.00	1,601.90
Arizona	1,500.00	$863.00	5.90	8.00	189.00			1,326.00	1,196.40	712.80	600.00	6,401.10
Arkansas, eastern district				3,300.00	971.90		300.00	1,591.20	990.82	161.75	625.00	7,940.67
Arkansas, western district			14,500.00				480.00	3,885.00	2,163.65	2,790.75		23,818.80
California, northern district		1,215.00	17.50	8.72	3,734.15	2,425.05	2,800.00	1,160.00		390.85		11,752.17
California, southern district					2.00	95.00	175.00	520.00	776.74	389.75	750.00	2,706.49
Colorado		$27.20				105.60	1,781.32	929.00	1,149.53	73.95	1,100.00	5,466.60
Connecticut						1.77		882.40	412.89	226.10		1,523.16
Dakota	319.46			295.20	192.50	20.00	800.00	88.20	70.00	372.65	950.00	3,108.01
Delaware					636.00	18.40		463.60	426.55	52.70		1,597.25
District of Columbia supreme court		2.00	109.44	5.00		2,682.46	3,034.38	1,072.00				6,905.28
United States Supreme Court												
Florida, northern district		22.00						115.00	272.24	131.85	870.00	1,411.09
Florida, southern district			11.25					160.00	241.65	48.80	250.00	711.70
Georgia, northern district	2,320.13	4.70	142.00	1,440.75			490.60	955.00	1,895.20	3,138.10		10,386.48
Georgia, southern district		8.00	200.00	25.10	815.00	136.78		355.00	580.00	1,177.55	250.00	3,027.43
Idaho	2,000.00		65.30			106.85		1,127.40	407.25	105.70	655.00	4,467.50
Illinois, northern district	478.63				443.32		1,671.17	4,237.20	1,160.20	356.05		8,351.57
Illinois, southern district	863.33			3,287.77		25.00	594.35	1,003.50	1,121.62	534.95		7,433.52
Indiana	439.66	545.65		82.95	45.00		2,970.00	780.00	125.89	288.35		5,277.50
Iowa, northern district	1,993.17		16.65			37.83	600.00	1,623.40	1,163.10	813.50		6,247.05
Iowa, southern district				25.35	117.30		760.00	972.40	1,408.13	421.55	1,205.00	4,969.73
Kansas	3,079.92		772.00	660.40		413.95	600.00	1,714.00	2,008.54	1,524.50	150.00	10,923.31
Kentucky	9,846.51	780.00	15,000.00	7,361.38	136.70	1.95	600.00	1,364.20	2,439.00	3,153.35		40,683.09
Louisiana, eastern district		12,974.00	26.20		732.00	182.70	1,000.00	1,550.00	1,788.00	578.75		18,781.65
Louisiana, western district		71.90						363.60	334.55	92.30	100.00	962.35
Maine	931.85							562.60	304.00	291.50		2,099.95
Maryland	347.46		219.90	1,460.00		23.58	339.84	1,384.00	1,009.65	102.50		4,886.93
Massachusetts	1,235.97	446.20	746.00	398.30	24.00	346.93	1,354.61	1,020.00	102.59	579.70		6,253.30
Michigan, eastern district	203.35		231.00	10.00		174.00	800.00	1,448.40	1,207.98	221.45		4,296.18
Michigan, western district			81.90	122.38			400.00	1,147.70	948.02	349.05	300.00	3,349.00
Minnesota		98.70		64.00			480.00	1,756.90	1,077.20	894.70		4,371.50
Mississippi, northern district	3,248.70	783.50	811.00	450.00				1,274.00	1,269.40	35.20		7,891.80
Mississippi, southern district						25.00		1,045.00	556.13	67.35		1,693.48
Missouri, eastern district		1,695.60	447.90			10.00	794.50	1,147.00	1,562.06	766.95		6,424.01
Missouri, western district	11,162.27	1,776.60	2,113.00	4,066.20		167.00	600.00	1,018.05	2,160.76	2,377.45	625.00	26,066.33
Montana						33.06		879.80	246.20	77.05	490.60	1,726.71
Nebraska			385.50	137.70		55.05	400.00	385.00	1,441.30	196.65		3,001.20
Nevada		.10		652.00		637.00		492.40		19.40	300.00	2,051.90

New Hampshire	335.78							129.60	406.55	61.15	50.00		983.03
New Jersey				2,349.00			477.88	557.80	40.57	467.25	48.00		3,940.50
New Mexico							600.00	961.40	1,524.65	172.40			3,258.45
New York, northern district	1,075.56	647.90	616.74	11,854.18	202.55	44.57	1,800.00	491.60	278.80	2,718.00	300.00		20,029.90
New York, eastern district		50.00	624.50	215.32	2,072.00		720.00		74.50	194.45	1,000.00		4,950.77
New York, southern district		26.00	158.80		3,160.40	3,348.20	4,950.00	1,404.75	153.60	6.50			13,208.25
North Carolina, eastern district					1.20		400.00	238.20	296.21	408.15	337.50		1,681.26
North Carolina, western district			2,534.20	2,500.00		116.10	680.00	1,502.00	2,228.05	7,507.56	100.00		17,167.91
Ohio, northern district		362.60	19.20				400.00	726.20	580.46	457.65	375.00		2,923.11
Ohio, southern district							1,657.85	1,005.00	512.30	585.70			3,710.85
Oregon	3,012.40			722.46				1,461.20	1,492.60	710.55			7,999.21
Pennsylvania, eastern district		518.90				33.80	1,879.05	1,405.00		518.85			4,445.60
Pennsylvania, western district			51.80	22.50		16.15	1,500.00	807.20	1,232.40	264.70	278.30		4,163.05
Rhode Island	957.19	797.50	51.00		1,233.85	75.48		463.80	451.55	42.85			4,073.22
South Carolina	3,491.84		11,500.00	1,564.10		725.00	1,400.00	2,397.00	1,662.50	3,494.47			26,234.91
Tennessee, eastern district	4,947.75			537.77	6.00		480.00	27.40	890.13	4,558.35			11,447.40
Tennessee, middle district		14.15			20.00	180.40	480.00	255.00	1,931.75	4,593.65			7,773.95
Tennessee, western district	1,184.69	520.00	1,050.80	676.55	104.00		600.00	3,371.00	2,854.70	806.65			11,168.39
Texas, northern district	331.61			2,041.30	237.60	495.22		744.40	1,323.95	974.95	800.00		6,948.13
Texas, eastern district								942.60	949.86	364.55	400.00		2,657.01
Texas, western district	1,000.00		407.86	2,260.00			480.00	150.92	2,800.80	1,137.05	1,585.00		9,821.63
Utah	18,376.36		514.40		559.03		1,500.00	1,646.50	2,423.87	2,755.10	1,779.16		29,554.42
Vermont								343.20	271.00	21.05			635.25
Virginia, eastern district		887.10		62.70	400.00	541.60	600.00	2,763.00	1,945.86	207.20	250.00		7,657.46
Virginia, western district	7,999.13		61.40	1,044.02	71.00	83.61	480.00	1,067.40	895.19	1,750.75	443.75		13,896.25
West Virginia							250.00	2,309.00	1,655.23	185.15	112.50		4,511.88
Washington Territory		162.00	223.75	983.69	844.50	190.25		1,012.60	1,855.59	875.35			6,147.73
Wisconsin, eastern district				109.48			1,200.00	492.20	337.50	653.55			2,792.73
Wisconsin, western district	1,164.67						600.00	906.80	662.22	489.30			3,822.99
Wyoming				14.25		80.00	134.00	834.00	151.35	15.75	525.00		1,754.35
Total	96,527.09	25,601.20	54,838.79	52,311.26	16,832.25	13,719.92	48,144.55	73,801.52	68,852.08	66,640.84	18,664.81		535,934.31

EXHIBIT F 3.—*A statement showing the expenses of the United States courts incurred in sitions and payments upon certifi*

	Judicial districts.	Marshals.	Jurors.	Witnesses.	Prisoners.	Bailiffs.	Miscellaneous.
1	Alabama, northern district	$20,067.40	$4,592.00	$27,000.00	$7,000.00	$425.00	$625.00
2	Alabama, middle district	21,622.32	4,674.00	19,500.00	860.00	500.00	200.00
3	Alabama, southern district	4,325.10	3,400.00	12,200.00	400.00	800.00	400.00
4	Alaska	4,700.00	4,200.00	2,500.00	10,500.00	200.00	1,500.00
5	Arizona	15,444.37	9,580.00	17,500.00	6,105.75	2,000.00	2,050.00
6	Arkansas, eastern district	6,676.58	16,800.00	23,500.00	13,345.85	2,490.00	1,350.00
7	Arkansas, western district	26,500.00	27,750.00	137,240.00	21,500.00	5,800.00	3,765.00
8	California, northern district	7,500.00	13,500.00	14,373.00	7,325.00	4,500.00	8,523.00
9	California, southern district	4,534.89	4,000.00	7,200.00	2,000.00	600.00	3,667.70
10	Colorado	7,100.00	16,367.00	8,205.00	1,515.00	964.00	2,194.70
11	Connecticut	2,270.00	2,300.00	1,500.00	950.00	1,430.90	300.00
12	Dakota	7,596.98	10,500.00	10,000.00	10,200.00	1,600.00	1,120.00
13	Delaware	1,500.00	1,000.00	560.00	100.00	942.00	50.00
14	Dist. Columbia supreme court	6,526.00	23,500.00	8,788.50	41,100.00	12,800.00	11,165.81
15	U. S. Supreme Court					3,243.52	34,256.48
16	Florida, northern district	2,400.00	3,800.00	5,000.00	500.00	900.00	590.00
17	Florida, southern district	1,114.00	3,090.00	1,522.00	300.00	934.00	765.00
18	Georgia, northern district	28,525.22	7,500.00	18,000.00	6,342.55	1,300.00	1,600.00
19	Georgia, southern district	6,010.00	7,500.00	7,000.00	1,500.00	3,315.00	1,580.00
20	Idaho	10,073.74	9,220.00	8,550.00	1,900.00	1,040.00	637.50
21	Indian Territory	1,000.00	3,000.00		1,000.00		500.00
22	Illinois, northern district	2,607.58	9,200.00	2,100.00	4,200.00	2,345.00	2,525.00
23	Illinois, southern district	9,973.40	12,500.00	13,500.00	10,278.00	1,500.00	250.00
24	Indiana	7,000.00	11,300.00	15,000.00	4,500.00	2,905.00	1,400.00
25	Iowa, northern district	5,312.98	9,800.00	10,900.00	2,100.00	740.00	380.00
26	Iowa, southern district	4,960.00	8,196.10	7,500.00	1,500.00	1,470.00	1,370.00
27	Kansas	6,500.00	11,298.00	26,600.00	11,612.00	1,000.00	1,624.30
28	Kentucky	16,218.19	12,092.10	39,543.00	8,453.46	660.00	370.00
29	Louisiana, eastern district	2,500.00	16,320.00	5,484.00	500.00	2,420.00	1,455.25
30	Louisiana, western district	3,350.00	6,000.00	8,515.00	815.00	1,042.00	358.85
31	Maine	8,419.66	4,122.00	6,157.00	1,840.00	1,120.00	1,021.00
32	Maryland	3,500.00	6,000.00	4,115.00	4,920.00	2,295.00	800.00
33	Massachusetts	4,298.80	10,500.00	6,500.00	3,500.00	4,000.00	1,193.20
34	Michigan, eastern district	3,000.00	8,860.00	8,520.00	2,000.00	2,630.00	484.95
35	Michigan, western district	2,642.76	6,420.00	5,012.00	1,175.00	552.00	270.00
36	Minnesota	9,217.19	12,012.00	16,348.00	2,800.00	1,440.00	485.00
37	Mississippi, northern district	5,639.87	8,909.00	7,417.00	2,350.00	600.00	943.00
38	Mississippi, southern district	3,650.00	7,377.00	5,670.00	327.00	1,057.00	649.00
39	Missouri, eastern district	5,027.48	9,300.00	8,000.00	1,000.00	2,400.00	466.00
40	Missouri, western district	4,924.80	13,972.00	19,268.00	4,887.00	727.00	1,410.50
41	Montana	3,500.00	7,700.00	4,100.00	4,500.00	1,522.00	226.00
42	Nebraska	3,657.58	11,200.00	11,000.00	2,000.00	1,540.00	475.00
43	Nevada	4,000.00	2,006.30	4,000.00	2,750.00	558.00	170.00
44	New Hampshire	1,300.00	1,600.00	600.00	200.00	700.00	500.00
45	New Jersey	2,000.00	5,000.00	5,600.00	1,823.00	2,400.00	57.00
46	New Mexico	7,973.71	19,960.00	17,700.00	4,150.00	2,054.00	2,360.00
47	New York, northern district	14,668.52	7,939.00	45,078.00	14,147.65	1,480.00	1,698.44
48	New York, eastern district	3,278.80	2,100.00	1,000.00	900.00	3,000.00	2,965.00
49	New York, southern district	5,093.39	12,550.00	4,477.00	4,755.00	11,104.00	15,101.83
50	North Carolina, eastern dist.	2,100.00	3,501.50	2,400.00	700.00	217.00	795.10
51	North Carolina, western dist.	8,677.77	10,000.00	17,600.00	4,500.00	700.00	750.00
52	Ohio, northern district	3,725.00	7,000.00	3,300.00	1,250.00	995.00	920.00
53	Ohio, southern district	3,945.16	8,796.00	7,194.00	14,339.00	2,325.30	2,185.76
54	Oregon	15,132.43	7,400.00	5,791.00	7,000.00	2,684.00	288.00
55	Pennsylvania, eastern dist	4,000.00	5,601.00	4,277.00	4,951.00	2,418.00	2,767.46
56	Pennsylvania, western dist	10,020.85	14,214.20	14,955.00	6,400.00	1,750.50	848.85
57	Rhode Island	1,511.36	1,600.00	400.00	1,800.00	2,700.00	250.00
58	South Carolina	20,219.38	12,400.00	39,500.00	5,500.00	1,691.00	1,840.00
59	Tennessee, eastern district	11,050.00	8,250.00	21,000.00	5,000.00	1,300.00	1,360.00
60	Tennessee, middle district	9,706.88	3,930.00	16,000.00	3,700.00	120.00	47.75
61	Tennessee, western district	3,304.67	4,100.00	7,321.00	800.00	2,190.00	70.00
62	Texas, northern district	13,495.87	11,450.00	13,800.00	5,200.00	1,285.95	1,367.69
63	Texas, eastern district	3,500.00	10,000.00	10,500.00	1,150.00	2,280.00	2,500.00
64	Texas, western district	7,750.00	15,050.00	13,500.00	7,500.00	1,150.00	1,315.50
65	Utah	23,020.59	24,000.00	19,200.00	500.00	4,220.00	2,122.35
66	Vermont	1,600.00	2,187.00	2,870.00	779.00	378.00	419.00
67	Virginia, eastern district	3,000.00	6,506.00	3,000.00	950.00	2,250.00	2,150.00
68	Virginia, western district	13,849.25	10,000.00	25,500.00	3,500.00	720.00	591.00
69	West Virginia	9,317.27	12,650.00	31,300.00	3,800.00	1,425.00	1,575.00
70	Washington	6,900.00	5,400.00	3,168.00	17,410.00	2,700.00	1,642.55
71	Wisconsin, eastern district	6,967.15	3,550.00	5,500.00	1,800.00	1,050.00	175.00
72	Wisconsin, western district	6,139.89	5,300.00	4,000.00	1,129.85	615.00	100.00
73	Wyoming	2,350.00	700.00	750.00	6,100.00	1,310.00	750.00
		530,979.83	624,788.20	912,638.50	344,186.11	140,519.27	144,995.46

the fiscal year 1889, *and paid in the fiscal year* 1889; *advances to marshals on requicates from the Treasury Department.*

Regular fees attorneys.	Special fees attorneys.	Regular assistant attorneys.	Special assistant attorneys.	Clerks.	Commissioners.	Rents.	Election deputies.	Total.	
$5,593.35	.....	$900.00	.....	$5,322.95	$5,058.30	$2,250.00	.....	$78,834.00	1
2,294.20	.....	525.00	.....	7,966.35	3,055.55	.....	.....	55,197.42	2
4,242.70	.....	.....	.....	3,255.27	822.15	.....	$330	30,175.22	3
.....	.....	.....	.....	.....	162.00	450.00	.....	24,012.00	4
3,295.20	.....	.....	$1,000.00	8,629.43	992.70	1,800.00	.....	63,397.45	5
1,343.40	$300.00	946.15	.....	1,839.30	334.55	1,875.00	.....	70,800.83	6
3,380.25	.....	1,567.80	.....	2,787.03	3,010.45	.....	.....	233,300.53	7
2,270.00	2,000.00	3,375.00	850.00	.....	1,090.30	.....	6,660	71,966.30	8
1,205.00	350.00	.....	.....	3,731.70	506.00	2,250.00	2,020	33,065.20	9
2,220.60	300.00	1,376.40	4,587.90	1,715.75	143.35	2,775.00	.....	49,464.70	10
1,590.27	.....	.....	.....	984.56	310.20	.....	1,600	13,235.03	11
2,294.09	158.00	1,774.69	.....	1,469.50	330.70	2,400.00	.....	49,443.96	12
1,063.60	.....	.....	.....	1,347.05	.....	.....	.....	6,502.65	13
12,632.46	250.00	.....	.....	.....	5.00	.....	.....	116,767.77	14
.....	.....	.....	.....	.....	.....	.....	.....	37,560.00	15
1,440.20	.....	.....	.....	1,025.65	41.35	1,295.00	.....	16,092.20	16
442.80	.....	.....	.....	530.55	82.10	860.00	.....	9,640.45	17
6,687.36	.....	1,527.47	.....	5,177.82	4,289.55	.....	.....	80,949.97	18
1,080.20	.....	.....	.....	1,955.80	443.45	750.00	.....	31,134.45	19
1,133.60	.....	.....	858.40	1,120.55	100.10	884.25	.....	36,218.14	20
.....	.....	.....	.....	.....	.....	.....	.....	5,500.00	21
1,296.40	.....	3,150.00	.....	728.80	791.85	.....	19,450	48,394.03	22
3,175.40	300.00	1,125.00	.....	2,868.34	426.85	.....	.....	55,916.09	23
1,231.70	.....	1,125.00	800.00	2,262.45	687.15	.....	2,560	50,771.30	24
2,476.20	.....	1,125.00	.....	563.00	1,065.85	.....	.....	34,463.03	25
2,828.30	.....	937.61	.....	591.62	703.80	2,185.00	.....	32,262.43	26
4,103.10	.....	1,125.00	.....	3,161.30	990.10	162.50	.....	68,176.30	27
4,517.40	.....	1,125.00	.....	3,379.40	3,134.45	.....	2,110	91,603.00	28
385.10	.....	1,875.00	.....	1,437.60	288.40	.....	1,250	33,915.35	29
2,254.20	.....	.....	.....	305.20	147.35	300.00	.....	23,087.60	30
1,773.00	.....	.....	.....	1,186.92	673.30	.....	.....	26,312.88	31
2,233.00	100.00	.....	185.00	1,756.10	907.15	.....	6,400	32,911.25	32
2,365.00	.....	2,400.00	9,548.40	1,026.39	2,100.70	.....	.....	47,432.49	33
2,664.80	.....	1,500.00	.....	1,043.08	600.80	50.00	.....	31,353.63	34
3,304.50	68.98	750.00	.....	1,265.75	294.10	450.00	.....	22,235.09	35
4,384.50	25.00	900.00	227.00	846.25	838.80	.....	.....	49,523.74	36
5,096.60	.....	.....	300.00	2,231.61	40.70	.....	.....	33,527.78	37
2,359.00	.....	.....	.....	423.05	.....	.....	.....	21,512.05	38
1,978.00	.....	1,671.27	.....	1,221.35	1,008.05	.....	3,105	35,171.15	39
3,250.60	.....	1,540.80	.....	2,868.61	1,780.15	1,250.00	.....	55,379.46	40
1,166.60	.....	.....	.....	330.35	16.20	575.00	.....	23,636.15	41
1,416.00	.....	750.00	.....	683.80	6.10	.....	.....	32,728.48	42
784.20	.....	.....	.....	396.80	22.25	.....	.....	14,689.55	43
109.80	.....	.....	.....	854.25	101.85	150.00	.....	6,115.90	44
952.85	150.00	600.00	.....	325.25	274.35	.....	.....	19,699.45	45
3,238.80	.....	703.30	.....	3,406.25	70.70	112.00	.....	61,728.76	46
1,842.40	.....	3,750.00	.....	3,324.15	2,141.60	500.00	.....	96,564.76	47
.....	.....	1,125.00	.....	47.78	.....	10,000.00	19,100	43,516.58	48
3,150.66	.....	15,140.30	200.00	.....	725.70	.....	49,100	121,397.88	49
1,094.80	.....	282.61	.....	1,156.50	330.40	1,012.50	.....	13,590.41	50
3,992.20	.....	1,275.00	.....	1,884.83	3,041.45	600.00	.....	53,021.25	51
2,011.20	.....	750.00	.....	1,057.43	147.55	.....	.....	21,156.18	52
1,249.00	50.00	3,300.00	.....	1,909.40	467.70	.....	2,305	48,066.26	53
4,722.00	90.00	.....	.....	3,634.25	1,064.60	.....	.....	47,806.28	54
1,300.00	.....	3,300.00	.....	2,219.45	325.40	.....	300	31,459.31	55
3,123.70	.....	1,875.00	894.35	2,717.70	611.30	91.35	4,730	62,232.80	56
1,228.80	.....	.....	.....	1,576.25	11.75	.....	.....	11,098.16	57
4,906.60	.....	2,625.00	.....	4,082.15	4,545.20	350.00	250	97,909.33	58
4,488.14	.....	1,032.00	.....	3,184.10	2,704.80	.....	.....	59,369.04	59
2,390.00	.....	900.00	.....	1,226.25	3,658.00	.....	.....	41,678.88	60
2,429.00	.....	900.00	.....	1,193.45	800.25	.....	.....	23,108.37	61
2,567.60	.....	.....	.....	1,372.69	2,291.65	1,674.00	.....	54,505.45	62
3,114.45	70.25	.....	.....	2,014.49	435.30	800.00	.....	36,394.49	63
2,359.90	.....	1,061.83	.....	1,254.00	1,217.20	2,505.00	.....	51,666.43	64
5,579.00	.....	2,814.93	.....	5,634.80	3,080.10	3,937.50	.....	94,109.27	65
332.00	.....	.....	.....	283.15	29.50	.....	.....	8,877.65	66
2,425.80	.....	1,125.00	.....	2,837.42	318.50	750.00	1,440	26,746.72	67
4,321.80	.....	900.00	.....	6,011.34	3,207.40	468.75	425	69,498.54	68
3,049.80	.....	750.00	.....	3,273.52	821.55	225.00	.....	68,178.14	69
3,050.90	.....	.....	.....	535.63	973.70	22.50	.....	41,803.28	70
1,225.60	.....	2,250.00	.....	1,025.55	74.30	.....	.....	23,617.60	71
837.00	.....	1,125.00	.....	573.30	160.45	.....	.....	19,980.49	72
1,621.30	715.00	.....	71.50	1,404.05	16.70	850.00	.....	16,638.55	73
161,958.98	4,927.23	80,700.16	19,522.55	127,978.41	70,668.85	46,610.35	123,135	3,353,608.90	

EXHIBIT F 4.—PROSECUTION OF CRIMES, 1889.

1888.			
	Howard Perry:		
July 7.	For expenses actually and necessarily incurred under direction of Attorney-General's letter dated June 27, 1888, as per following statement:		
1.	Railroad fare, Washington to New York and return	$10.00	
	Cab to depot, Washington	.50	
	Pullman car, Washington to Philadelphia	.75	
	Dinner, New York	1.00	
2.	Breakfast, New York	.70	
	Car and bridge fare, New York	.26	
	Carriage to penitentiary, Brooklyn	3.00	
	Dinner, New York	1.15	
3.	Room, New York, vou. 1	3.00	
	Breakfast, New York	.50	
	Dinner, Philadelphia	1.00	
	Pullman car, Philadelphia to Washington	.75	
	Cab to residence, Washington	.50	
	Jurat	.25	
			$23.36
	Frank Strong:		
31.	For services as general agent, Department of Justice, from July 1, 1888, to July 31, 1888, dates inclusive, 31 days, at $10 per day		310.00
	Leigh Chalmers:		
	For services as examiner, Department of Justice, from July 1, 1888, to July 31, 1888, dates inclusive, 31 days, at $8 per day		248.00
	David A. Fisher:		
	For services as examiner, Department of Justice, from July 1, 1888, to July 31, 1888, dates inclusive, 31 days, at $8 per day		248.00
	Thomas B. Hardin:		
	For services as examiner from July 1, 1888, to July 31, 31, 1888, dates inclusive, 31 days, at $6 per day	186.00	
25.	Railway fare, Washington, D. C., to Dubuque, Iowa	22.90	
	Sleeping-car fare, Washington, D. C., to Chicago, Ill.	5.00	
	Copy of postal-route map of States of Iowa and Illinois, bought from Post-Office Department for official use, vou. 1	5.50	
	Transportation of self and baggage from house to depot, at Washington	.85	
	Supper on train, en route to Dubuque	.60	
26.	Breakfast at Pittsburgh, Pa	.75	
	Dinner at Crestline, Ohio	.75	
	Supper on train	.75	
	Sleeping-car fare, Chicago, Ill., to Dubuque, Iowa	1.50	
	Baggage	.10	
27.	Transportation self and baggage, depot to hotel, at Dubuque, Iowa	.25	
31.	Five days' board and lodging at Dubuque, July 26–31, vou. 2	12.50	
	Jurat	.25	
			237.70
	D. Ira Baker:		
	For services as examiner, Department of Justice, from July 1, 1888, to July 31, 1888, dates inclusive, 31 days, at $8 per day	248.00	
	For expenses actually and necessarily incurred as per following statement:		
July 2.	Bill at Falmouth Hotel, Portland, Me., vou. 1	5.25	
	To railroad depot for Ellsworth, etc	.50	
	Railroad fare, Portland to Ellsworth	6.00	
	Dinner, en route, buffet-car	1.00	
	Supper, en route, buffet-car	.75	
	Bus fare to Hancock House, Ellsworth	.25	
3.	Bill at Hancock House, vou. 2	1.50	
	Bus, cars, en route for Hancock and Bluffs	.25	
	Railroad fare to Bluffs	.75	

1888.		Dr. Ira Baker—Continued.	
July	3.	Dinner at Hancock	$0.75
		Supper at the Bluffs	1.00
		Fare on steam-boat to Bar Harbor	.75
	9.	Bill at West End Hotel, Bar Harbor, and transfer, vou. 3	22.25
		Fare on steamer to Portland	4.00
		Supper on steamer	.75
	10.	Breakfast on steamer	.75
		Self and luggage to Ottawa House, Portland	.75
	13.	Railroad fare to Boston, $3.10, and to depot, 25 cents	3.35
		Supper at Portland, en route	.85
		To Young's Hotel, Boston	.25
	14.	Breakfast, Young's Hotel, Boston	.95
		Dinner, Young's Hotel, Boston	1.00
		Bill at Young's Hotel, Boston, vou. 4	2.50
		To cars for Portland	.25
		Railroad fare, Boston to Portland	3.10
		To hotel at Portland (Cushing's Island)	.25
	31.	Bill at hotel, Portland, 21 days, vou. 5	73.50
		Self and luggage to cars for Washington	1.00
		Railroad fare to Boston	3.10
		Dinner, en route, Exeter	.75
		Supper, en route, Boston	1.00
		Transfer self and luggage to Old Colony Railroad	1.00
		Steamer and railroad fare, Fall River and Pennsylvania Railroad, to Washington from Boston	12.50
		Seat in cars	1.25
		Supper on steamer, $1; breakfast on cars, $1	2.00
		Street-car fare, New York City to Jersey City ferry	.05
		Self and luggage to Ebbitt, Washington	.75
		Affidavit to account	.25
			404.9

[Explanation.—My expenses in Boston, on the 14th, exceeds the usual limit slightl as my stay was so short I was unable to secure special rates. (Signed).—D. I BAKER.]

Howard Perry:

For expenses actually and necessarily incurred under direction of the Attorney-General's letter dated August 17, 1888, as per following statement:

Aug.	19.	Railroad fare, Washington to New York and return	$10.00
		Hansom to depot, Washington	.50
		Pullman car, Washington to New York	1.25
		Supper, New York	.75
		Lodging, New York, vou. 1	1.00
	20.	Breakfast, New York	.90
		Railroad fare, New York to Albany, N. Y	3.10
		Pullman, New York to Albany, N. Y	1.00
		Baggage to depot, New York	.25
		Elevated train, New York	.05
		Carriage to penitentiary, Albany	1.50
		Lunch on cars	1.00
	22.	Carriage to penitentiary, Albany	1.00
		Hotel bill, Albany, vou. 2	*8.00
		Baggage to depot, Albany	.25
		Railroad fare, Albany to New York	3.10
		Pullman, Albany to New York	1.00
		Dinner on cars	1.00
		Elevated train, New York	.05
		Sleeper, New York to Washington	2.00
		Hansom from depot to residence	.50
		Jurat	.25
			38.4

* The lowest rates that could be secured at the Delavan House, Albany, or oth suitable house, for so short a time, were $4 per day.

HOWARD PERRY.

1888.		Frank Strong:		
Aug.	31.	For services as general agent, Department of Justice, from August 1, 1888, to August 31, 1888, dates inclusive, 31 days, at $10 per day	$310.00	
		For expenses actually and necessarily incurred, as per following statement:		
		Bill of Western Union Telegraph Co. for July, 1888, vou.	10.24	
		Railway Guide for official use, vou	.50	
		Jurat	.25	
				$320.99
		William N. McKenney:		
		For services as examiner from August 1, 1888, to August 31, 1888, dates inclusive, 31 days, at $7 per day		217.00
		James W. Nightingale:		
July	31.	For services as examiner, Department of Justice, from July 1, 1888, to July 31, 1888, dates inclusive, 31 days, at $8 per day	248.00	
		For expenses actually and necessarily incurred, as per following statement:		
	1.	Breakfast, New York City	.85	
		Dinner, New York City	1.00	
		Self and baggage from Gilsey House to Des Brosses street ferry, New York City	1.25	
		Pullman car, New York to Washington, D. C	1.25	
		Supper on train	.70	
		Self and baggage, depot to residence, Washington, D. C.	.75	
	6.	Self and baggage, residence to depot, Washington, D. C.	.75	
		Railroad fare, Washington, D. C., to Chicago, Ill	25.00	
		Dinner, dining-car	1.00	
		Supper, dining-car	1.00	
	7.	Breakfast, dining-car	1.00	
		Conveyance from depot to United States court, Chicago, Ill	.50	
		District-messenger service used in connection with finding of baggage lost between Washington, D. C., and Chicago, Ill	.85	
		Dinner, Chicago, Ill	.95	
	8.	Transfer of baggage, Pennsylvania depot to hotel, Chicago, Ill	.50	
		Board, Grand Pacific Hotel, Chicago, Ill., supper 7th to noon 8th, inclusive, vou. 1	3.50	
		Self and baggage, hotel to depot, Chicago, Ill	1.00	
		Railroad fare, Chicago, Ill., to Omaha, Nebr	12.75	
		Pullman car, Chicago, Ill., to Omaha, Nebr	2.50	
		Dinner, dining-car	.75	
		Supper, dining-car	.75	
	9.	Breakfast, Millard House, Omaha, Nebr	.75	
		Street-car fare, depot to Millard House and return, Omaha, Nebr	.10	
		Railroad fare, Omaha, Nebr., to Ogden, Utah, transportation order No. 235, Union Pacific Railroad.		
		Pullman car from Omaha, Nebr., to San Francisco, Cal.	13.00	
		Dinner, train	.80	
		Supper, Grand Island, Nebr	.75	
	10.	Breakfast, Laramie, Wyo	.75	
		Dinner, Rollins, Wyo	.75	
		Supper, Green River, Wyo	.75	
		Railroad fare, Ogden, Utah, to San Francisco, Cal., transportation order No. 234, Central Pacific Railroad.		
	11.	Breakfast, Wells, Nevada	.75	
		Dinner, Battle Mountain, Nev	.75	
		Supper, Humboldt, Nev	.75	
	12.	Breakfast, Blue Canyon, Cal	.75	
		Dinner, Sacramento	.75	
		Telegram to United States marshal, San Francisco, from Sacramento, vou. 2	.22	
		Baggage from ferry to hotel, San Francisco, Cal	.50	
		Conveyance from ferry to office of United States marshal, San Francisco, Cal	.75	
		Supper, San Francisco, Cal	.90	

1888.		James W. Nightingale—Continued.		
July.	13.	Breakfast, San Francisco, Cal	$1.00	
		Room, Palace Hotel, San Francisco, Cal., vou. 3	1.50	
		Self and baggage, hotel to wharf Pacific Coast Steam-ship Company, San Francisco, Cal	1.50	
		Passage on steam-ship *Umatilla* from San Francisco, Cal., to Sitka, Alaska	70.00	
	26.	Transfer of baggage from steamship wharf to hotel, Sitka, Alaska	.50	
	30.	Board, Hotel Baranoff, Alaska, vou. 4	12.00	
		Jurat	.25	
				$417.12
		James W. Nightingale:		
Aug.	31.	For services as examiner, Department of Justice, from Aug. 1, 1888, to Aug. 31, 1888, dates inclusive, 31 days, at $8 per day	248.00	
		For expenses actually and necessarily incurred, as per following statement:		
	9.	Board, Hotel Baranoff, Sitka, Alaska, 8 days, vou. 1	16.00	
		Baggage from hotel to steam-ship wharf, Sitka, Alaska	.50	
	10.	Passage on steam-ship *Ancon* from Sitka, Alaska, to Tacoma, Wash	54.00	
	17.	Use of conveyance from steam-ship wharf, Victoria, British Columbia, to office of Joseph Boscowitz, etc., and return to steamer, official business	2.00	
	18.	Conveyance, self and baggage, steam-ship wharf to hotel, Tacoma, Wash	1.00	
		Breakfast, Tacoma, Wash	1.00	
		Dinner, Tacoma, Wash	.85	
		Supper, Tacoma, Wash	1.00	
	19.	Breakfast, Tacoma, Wash	.95	
		Room, Hotel Fife, Tacoma, Wash., vou. 2	1.00	
		Omnibus and baggage, hotel to depot, Tacoma, Wash	.50	
		Railroad fare Tacoma, Wash., to St. Paul, Minn., transportation order No. 237, Northern Pacific Railroad.		
		Pullman car Tacoma, Wash., to St. Paul, Minn	13.50	
		Dinner, dining-car	.75	
		Supper, dining-car	.75	
	20.	Breakfast, dining-car	.75	
		Dinner, dining-car	.75	
		Supper, dining-car	.75	
	21.	Breakfast, dining-car	.75	
		Dinner, dining-car	.75	
		Supper, dining-car	.75	
	22.	Breakfast, dining-car	.75	
		Dinner, dining-car	.75	
		Supper, dining-car	.75	
		Omnibus and baggage from depot to Hotel Ryan, St. Paul, Minn	.50	
	23.	Board, Hotel Ryan, St. Paul, Minn., 1½ days, vou. 3	4.50	
		Omnibus and baggage, Hotel Ryan to depot, St. Paul, Minn	.50	
		Railroad fare from St. Paul, Minn., to Chicago, Ill	11.50	
		Pullman car from St. Paul, Minn., to Chicago, Ill	2.00	
		Supper, dining-car, Chicago, Milwaukee and St. Paul Railroad	.75	
	24.	Breakfast, Chicago, Ill	1.00	
		Dinner, Chicago, Ill	.95	
		Conveyance from United States court building to Pennsylvania Railroad depot, Chicago, Ill	.50	
		Checking and care of baggage (hand bags, etc.) at Pennsylvania Railroad depot check-room, Chicago, Ill., while awaiting departure of train	.30	
		Railroad fare from Chicago, Ill., to Washington, D. C	17.50	
		Pullman car from Chicago, Ill., to Washington, D. C	5.00	
		Supper on train	.85	
	25.	Breakfast on train	.90	
		Dinner on train	.95	
		Supper on train	1.00	

1888.	James W. Nightingale—Continued.		
Aug. 25.	Conveyance self and baggage from depot to residence, Washington, D. C.	$1.00	
	Jurat	25	
			$398.50
	J. Monroe Heiskell:		
July 31.	For services as examiner, Department of Justice, from July 1, 1888, to July 31, 1888, dates inclusive, 31 days, at $8 per day	248.00	
	For expenses actually and necessarily incurred, as per following statement:		
1.	Breakfast, 90 cents; dinner, $1.20; supper, 85 cents	2.95	
2.	Breakfast, 85 cents; dinner, $1.15; supper, 95 cents	2.95	
3.	Breakfast, 85 cents; dinner, $1.25; supper, 85 cents	2.95	
4.	Breakfast, $1; dinner, $1.25; supper, 85, cents	3.10	
5.	Breakfast, 85 cents; dinner, $1.25; supper, 90 cents	3.00	
6.	Breakfast, 90 cents; dinner, $1.25; supper, 85 cents	3.00	
7.	Breakfast, 90 cents; dinner, $1.25; supper, 90 cents	3.05	
8.	Breakfast, 90 cents; dinner, $1.25; supper, 85 cents	3.00	
9.	Breakfast, 90 cents; dinner, $1.25; supper, 90 cents	3.05	
10.	Breakfast, 90 cents; dinner, $1.25; supper, 85 cents	3.00	
11.	Breakfast, 85 cents; dinner, $1.30; supper, 90 cents	3.05	
12.	Breakfast, 90 cents; dinner, $1.20; supper, 90 cents	3.00	
13.	Breakfast, 90 cents; dinner, $1.25; supper, 80 cents	2.95	
14.	Breakfast, $1; dinner, $1.10; supper, 80 cents	2.90	
15.	Breakfast, 95 cents; dinner, $1.25; supper, 90 cents	3.10	
16.	Breakfast, 90 cents; dinner, $1.25; supper, 80 cents	3.00	
17.	Breakfast, 90 cents; dinner, $1.25; supper, 90 cents	3.05	
18.	Breakfast, 90 cents; dinner, $1.25; supper, 85 cents	3.00	
	Hack used six hours in locating a man (Holland) in navy-yard investigation	6.00	
	Two extra meals paid in same service for assistant	2.00	
19.	Hack used by self in going from Brooklyn to hotel, N. Y. (Gilsey), 2 o'clock a. m	3.00	
	Street-car fare to McEry, sent on errand	.25	
	Breakfast, 85 cents; dinner, $1.25; supper, 95 cents	3.05	
20.	Breakfast, 95 cents; dinner, $1.20; supper, 80 cents	2.95	
21.	Breakfast, $1; dinner, $1.20; supper, 80 cents	3.00	
22.	Breakfast, $1; dinner, $1.10; supper, 90 cents	3.00	
23.	Breakfast, $1; dinner, $1.10; supper, 80 cents	2.90	
24.	Breakfast, 90 cents; dinner, $1.10; supper, 90 cents	2.90	
25.	Breakfast, 90 cents; dinner, $1.20; supper, 95 cents	3.05	
26.	Breakfast, 90 cents; dinner, $1.25; supper, 90 cents	3.05	
27.	Breakfast, 85 cents; dinner, $1.25; supper, 85 cents	2.95	
28.	Breakfast, $1; dinner, $1.20; supper, 80 cents	3.00	
29.	Breakfast, 85 cents; dinner, $1.20; supper, 90 cents	2.95	
30.	Breakfast, 90 cents; dinner, $1.25; supper, 95 cents	3.10	
31.	Breakfast, 85 cents; dinner, $1.30; supper, 80 cents	2.95	
	Room rent at Gilsey House, nou. 1	46.50	
	Street-car fare in New York City from July 1 to July 15, inclusive, while engaged there on duty for the Department	2.55	
	Street-car fare from July 16 to 31, inclusive, while engaged on naval investigation, which includes street-car fare in New York on Broadway and cross-town lines, elevated and bridge roads, street cars on Fulton avenue and Sand street lines, Brooklyn, going and returning from these cities respectively, and while in them	7.20	
	Paid car fare for others connected with this investigation during said period	1.65	
	Two telegrams, nou. B and C (dated July 17, to Commandant navy-yard, and dated July 18, to general agent Department of Justice)	.56	
	Jurat to this account	.25	
			410.91
	[These expenses incurred while exclusively engaged on naval investigation.]		

1888.	J. Monroe Heiskell—Continued.		
Aug. 31.	For services as examiner, Department of Justice, from Aug. 1, 1888, to Aug. 31, 1888, dates inclusive, 31 days, at $8 per day	$248.00	
	For expenses actually and necessarily incurred, as per following statement:		
1.	Breakfast, 90 cents; dinner, $1.25; supper, 80 cents	2.95	
2.	Breakfast, 85 cents; dinner, $1.25; supper, 90 cents	3.00	
3.	Breakfast, 85 cents; dinner, $1.30; supper, 80 cents	2.95	
4.	Breakfast, $1; dinner, $1.20; supper, 80 cents	3.00	
5.	Breakfast, 90 cents; dinner, $1.20; supper, 80 cents	2.90	
	Cab for 3 hours	3.00	
6.	Breakfast, 85 cents; dinner, $1.25; supper, 75 cents	2.85	
7.	Breakfast, 90 cents; dinner, $1.25; supper, 85 cents	3.00	
8.	Breakfast, $1; dinner, $1.20; supper, 75 cents	2.95	
9.	Breakfast, 85 cents; dinner, $1.25; supper, 85 cents	2.95	
10.	Breakfast, 85 cents; dinner, $1.30; supper, 80 cents	2.95	
11.	Breakfast, 85 cents; dinner, $1.25; supper, 95 cents	3.05	
12.	Breakfast, 90 cents; dinner, $1.10; supper, 95 cents	2.95	
13.	Breakfast, 90 cents; dinner, $1.20; supper, 95 cents	3.05	
14.	Breakfast, 85 cents; dinner, $1.25; supper, 90 cents	3.00	
15.	Breakfast, 95 cents; dinner, $1.20; supper, 80 cents	2.95	
	Cab, 3½ hours	3.50	
16.	Breakfast, $1; dinner, $1.20; supper, 80 cents	3.00	
17.	Breakfast, 90 cents; dinner, $1; supper, 90 cents	2.80	
18.	Breakfast, 85 cents; dinner, $1.30; supper, 75 cents	2.90	
19.	Breakfast, 85 cents; dinner, $1.20; supper, 90 cents	2.95	
20.	Breakfast, $1; dinner, $1.20; supper, 80 cents	3.00	
21.	Breakfast, 90 cents; dinner, $1.20; supper, 80 cents	2.90	
22.	Breakfast, 80 cents; dinner, $1.25; supper, 85 cents	2.90	
23.	Breakfast, 95 cents; dinner, $1.25; supper, 85 cents	3.05	
24.	Breakfast, 90 cents; dinner, $1.25; supper, 75 cents	2.90	
25.	Breakfast, 90 cents; dinner, $1.25; supper, 95 cents	3.05	
26.	Breakfast, 85 cents; dinner, $1.25; supper, 85 cents	2.95	
27.	Breakfast, $1; dinner, $1.15; supper, 85 cents	3.00	
28.	Breakfast, 90 cents; dinner, $1.20; supper, 85 cents	2.95	
	Cab, 3 hours	3.00	
29.	Breakfast, 95 cents; dinner, $1.20; supper, 80 cents	2.95	
30.	Breakfast, 90 cents; dinner, $1.20; supper, 90 cents	3.00	
31.	Breakfast, $1; dinner, 95 cents; supper, 85 cents	2.80	
	Bill for room at Gilsey, from Aug. 1 to 31, inclusive, vou. 1	46.50	
	Telegrams to Paymaster Allen, vou. 1½, 2, 3, 4, 5, 6	2.52	
	Street-car and elevated railroad fare for self, from Aug. 1 to 31, inclusive (three Sundays) excepted, in going and returning from New York City to Brooklyn navy-yard, using twice daily the following lines: Broadway surface and New York cross-town lines, Third avenue elevated, and bridge cable; in Brooklyn, the Sands street and Fulton avenue lines	12.88	
	Extra street-car fare of self and persons connected with this investigation in going and returning from navy-yard to the office of United States attorney, marshal, and commissioner	2.15	
	Jurat to this account	.25	
			$413.40
	[These expenses incurred while exclusively engaged in naval investigation.]		
	David A. Fisher:		
	For services as examiner, Department of Justice, from Aug. 1, 1888, to Aug. 31, 1888, dates inclusive, 31 days, at $8 per day	248.00	
	For expenses actually and necessarily incurred, as per following statement:		
11.	Transferring baggage, hotel to depot, Washington, D. C.	.25	
	Dinner at Harrisburgh, Pa	.60	
	Sleeping-car fare, Altoona, Pa., to Chicago, Ill	3.50	
	Lunch at Pittsburgh, Pa	.50	
12.	Breakfast at Crestline, Ohio	.75	
	Dinner at Fort Wayne, Ind	.50	
	Supper at Chicago, Ill	.75	

1888.				
		David A. Fisher—Continued.		
Aug.	13.	Sleeping-car fare, Chicago, Ill., to Springfield, Ill	$2.00	
	31.	Hotel, Springfield, Ill., vou. 1	51.00	
		Jurat to account	.25	
				$308.10
		Thomas B. Hardin:		
		For services as examiner from Aug. 1 to Aug. 31, 1888, dates inclusive, 31 days, at $6 per day	186.00	
		For expenses actually and necessarily incurred, as per following statement:		
	17.	Board and lodging at Dubuque, vou. 1	40.75	
		Bus fare, hotel to depot, Dubuque	.25	
		Railroad fare, Dubuque to Fort Dodge, Iowa	5.75	
		Pullman-car fare, Dubuque to Waterloo, Iowa	.50	
		Dinner at Waterloo, Iowa	.50	
		Bus fare, depot to hotel, Fort Dodge, Iowa	.25	
		Telegram to Van Duzee, clerk of courts at Dubuque, sent from Fort Dodge, 34 words, vou. 2	.34	
	20.	Board and lodging at Fort Dodge, vou. 3	6.00	
		Bus fare, hotel to depot, en route to Sioux City	.25	
		Railroad fare, Fort Dodge to Sioux City, Iowa	4.05	
		Bus fare and transportation of baggage, depot to hotel, Sioux City, Iowa	.50	
		Supper at Sioux City, Iowa	.60	
	31.	Board and lodging at Sioux City, Iowa, vou. 4	33.00	
		Jurat to this account	.25	
				278.99
		D. Ira Baker:		
	31.	For services as examiner, Department of Justice, from Aug. 1 to Aug. 31, 1888, dates inclusive, 31 days, at $8 per day	248.00	
		For expenses actually and necessarily incurred as per following statement:		
		Paid telegram, Strong, agent, to Portland, Me	.75	
	12.	Self and luggage to railroad depot, Washington, D. C	.75	
		Railroad fare, Washington to Fort Smith, Ark	33.45	
		Seat to Harrisburg, Pennsylvania Railroad	.75	
		Dinner en route, Harrisburg, Pa	1.00	
		Sleeper, Harrisburg to St. Louis, Mo	5.00	
		Supper en route, Altoona, Pennsylvania Railroad	1.00	
	13.	Breakfast en route, buffet	1.10	
		Dinner en route, Terre Haute	1.00	
		Supper, St. Louis depot	.75	
	14.	Breakfast, Monett	.75	
		Dinner, Chester	.75	
		Fort Smith, Ark., self and luggage to hotel	1.00	
	24.	Street-car fare, Fort Smith, as follows: 14th, 10 cents; 16th, 20 cents; 17th, 10 cents; 18th, 15 cents; 20th, 6 cents	.61	
		21st, 10 cents	.10	
		22d, 20 cents; 23d, 10 cents; 24th, 10 cents; 26th, 15 cents	.55	
		Hotel bill, 10½ days, at $2.25 per day, vou. 1	23.07	
	25.	Hotel bill, 1 day, at $2.25 per day, vou. 2	2.25	
		Transfer self and luggage to Mr. Wheeler's, Sixth street	1.00	
	31.	Street-car fare, Fort Smith, 10 cents; 28th, 10 cents; 29th, 20 cents	.40	
		30th, 20 cents; 31st, 10 cents	.30	
		Board bill to date, 25th to date (meals only), vou. 3	6.00	
		Affidavit to account	.25	
			330.58	
		Less disallowance as above for the reason that the telegram was charged for in the monthly account of the Western Union Telegraph Company for July, 1888, and paid for by Department of Justice	.75	
				329.83
		Leigh Chalmers:		
		For services as examiner, Department of Justice, from Aug. 1, 1888, to Aug. 31, 1888, dates inclusive, 31 days, at $8 per day	248.00	

Leigh Chalmers—Continued.

For expenses actually and necessarily incurred as per following statement:

1888.			
Aug.	2.	Transportation ticket No. 253 from Washington, D. C., to Madison, Wis., self and baggage from hotel to depot, Washington	$0.60
		Sleeper from Washington to Chicago	5.00
		Dinner on dining-car	1.00
		Supper at Grafton, W. Va	.75
	3.	Breakfast on train (dining-car)	.75
		Depot to hotel at Chicago	.50
	4.	Hotel bill at Chicago, vou. 1	2.50
		(Missed connection at Chicago on account of detention to repair broken bridge in W. Va.)	
		Sleeper from Chicago to Madison, Wis	.75
		Depot to hotel at Madison, Wis	.50
	11.	Hotel bill at Madison, Wis., vou. 2	19.75
	13.	Hotel bill at Madison, Wis., vou. 3	*9.50
		Railroad fare from Madison to Milwaukee	2.44
		Self and baggage from hotel to depot	.75
		Self and baggage from depot to hotel, Milwaukee	.75
	14.	Street-car fare	.20
	15.	Street-car fare	.20
	16.	Street-car fare	.20
	17.	Street-car fare	.20
	18.	Street-car fare	.20
	20.	Hotel bill at Milwaukee, vou. 4	23.25
		Street-car fare	.20
	21.	Street-car fare	.20
	22.	Street-car fare	.20
	23.	Hotel bill at Milwaukee, vou. 5	9.00
		Self and baggage, hotel to depot	.75
		Railroad fare, Milwaukee to Chicago	2.55
		Self and baggage from depot to hotel, Chicago	1.00
	24	Street-car fare	.20
	25.	Street-car fare	.20
	26.	Street-car fare	.20
	27.	Street-car fare	.20
	28.	Street-car fare	.20
	29.	Street-car fare	.20
	30.	Street-car fare	.20
	31.	Street-car fare	.10
		Hotel bill at Chicago, vou. 6	26.25
			$359.41

Baltimore and Ohio Railroad Company:

For railroad fare (transportation order 253) from Washington, D. C., to Madison, Wis., for one passenger (Leigh Chalmers), by order of G. A. Jenks, Acting Attorney-General 20.65

James W. Nightingale:

Sept.	30.	For services as examiner, Department of Justice, from Sept. 1, 1888, to Sept. 30, 1888, dates inclusive, 30 days, at $8 per day	240.00
		For expenses actually and necessarily incurred as per following statement:	
	12.	Passage on steamer, Washington, D. C., to Norfolk, Va.	2.00
	12.	State-room on steamer, Washington, D. C., to Norfolk, Va.	2.00
		Supper on steamer	1.00
	14.	Breakfast on steamer	1.00
		Conveyance from wharf, Norfolk, Va., to office of Virginia Pilot Association, etc	.75
		Dinner, St. James Hotel, Norfolk, Va	1.00
		Conveyance to wharf, Norfolk, Va	.25
		Passage on steamer, Norfolk, Va., to Washington, D. C.	2.00
		Conveyance from Fortress Monroe to Hampton, and use of same	1.00
		Supper, Barnes Hotel, Hampton, Va	1.00
		Conveyance from Hampton to Old Point, etc	1.00

* Disallowed.

1888.	Baltimore and Ohio Railroad Company—Continued.		
Sept. 14.	Board, Hygeia Hotel, Fortress Monroe, Va., vou. 1 (from after supper, 13, to after breakfast, 14)	$2.00	
	Legal-cap paper for official use	.10	
	Dinner, Fortress Monroe, Va	1.00	
	Supper, Fortress Monroe, Va	.75	
15.	Breakfast, Fortress Monroe, Va	.75	
16.	Board, Hygeia Hotel, Fortress Monroe, Va., 1 day, vou 2.	3.00	
	State-room on steamer, Fortress Montroe, Va., to Washton, D. C	2.00	
	Supper on steamer	1.00	
17.	Conveyance and baggage from wharf, Washington, D. C.	.50	
	Jurat	.25	
			$264.35
	Leigh Chalmers:		
30.	For services as examiner, Department of Justice, from Sept. 1, 1888, to Sept. 30, 1858, dates inclusive, 30 days, at $8 per day	240.00	
	For expenses actually and necessarily incurred as per following statement:		
10.	Hotel bill at Chicago, Ill., vou. 1	27.75	
	Railroad fare from Chicago to Washington, D. C.	17.50	
	Sleeper from Chicago to Washington, D. C	5.00	
	Self and baggage from hotel to depot	.75	
	Dinner at restaurant	.75	
	Supper on dining-car	.75	
11.	Breakfast at Grafton, W. Va	.75	
	Dinner on dining-car	1.00	
	Street-car fare from Sept. 1 to 10, inclusive	1.70	
	Self and baggage from depot to residence, Washington, D. C	.50	
	Jurat	.25	
			296.70
	Wm. N. McKenney:		
30.	For services as examiner from Sept. 1, 1888, to Sept. 30, 1888, dates included, 30 days, at $7 per day	210.00	
	For expenses actually and necessarily incurred, as per following statement:		
7.	Railroad ticket, Washington, D. C., to Pittsburgh, Pa.	9.00	
	Cab to depot, Washington, D. C	.25	
	Parlor-car to Pittsburgh, Pa	1.50	
	Dinner on railroad train	1.00	
	Omnibus to hotel, Pittsburgh, Pa	.25	
13.	Hotel bill, Pittsburgh, Pa., as per vou	20.15	
	Omnibus to depot, Pittsburgh, Pa	.25	
	Railroad ticket to Washington, D. C	9.00	
	Pullman car to Washington, D. C	1.50	
	Dinner at Harrisburg, Pa	.75	
	Supper on railroad train	.80	
	Cab from depot, Washington, D. C	.25	
30.	Jurat	.25	
			254.95
	Frank Strong:		
	For services as general agent, Department of Justice, from Sept. 1, 1888, to Sept. 30, 1888, dates inclusive, 30 days, at $10 per day	300.00	
	For expenses actually and necessarily incurred, as per following statement:		
	Bill of Western Union Telegraph Company for Aug., 1888, vou	6.06	
6.	Paid Rollins, cab hire to District jail and return, vou..	2.50	
	Jurat	.25	
			308.81
	J. Monroe Heiskell:		
30.	For services as examiner, Department of Justice, from Sept. 1 to Sept. 30, 1888, dates inclusive, 30 days, at $8 per day	240.00	
	For expenses actually and necessarily incurred, as per following statement:		
1.	Breakfast, 75 cents; dinner, $1.25	2.00	

1888.			
	J. Monroe Heiskell—Continued.		
Sept.	2. Breakfast, 85 cents; dinner, $1.15	$2.00	
	3. Breakfast, 85 cents; dinner, $1.15	2.00	
	4. Breakfast, $1; dinner, $1	2.00	
	5. Breakfast, $1; dinner, $1	2.00	
	6. Breakfast, $1	1.00	
	Removal of baggage, New York to Brooklyn	.75	
	Room at Gilsey House from Sept. 1 to 5, inclusive, von. 1.	7.50	
	9. Fare to Washington, D. C. (ordered there)	6.60	
	Pullman sleeper en route	2.00	
	Supper en route	1.00	
	10. Herdic	.25	
	Breakfast	1.00	
	Lunch	.80	
	Dinner en route returning to Brooklyn	1.00	
	Limited express returning to Brooklyn, taken by order of Department	8.85	
	Cab, Brooklyn, going and returning from Annex	1.00	
	16. (Sunday) cab hire in going to and returning from the residence of Mr. Hicks, on business connected with navy-yard investigation, 4 hours	4.00	
	30. Bill at Mansion House, Brooklyn, from Sept. 6 to 30, inclusive, von. 2	81.00	
	Street car fare in the city of Brooklyn in going to and returning from navy-yard, and going to and returning from the United States court building and other places, in connection with the investigation, for 26 days	5.20	
	Jurat to this account	.25	
			$372.20
	D. Ira Baker:		
	For services as examiner, Department of Justice, from Sept. 1, 1888, to Sept. 30, 1888, dates inclusive, 30 days, at $8 per day	240.00	
	For expenses actually and necessarily incurred, as per following statement:		
Aug.	13. Sleeper to Selligman, en route to Ft. Smith, Ark., inadvertently omitted in August account	3.00	
	Ferriage across Pothan and Arkansas River at Ft. Smith, Ark., 50 cents and $1	1.50	
Sept.	3. Street-car fare, Fort Smith, 20 cents; 5th, 30 cents; 6th, 10 cents; 11th, 10 cents; 12th, 15 cents; 13th, 20 cents; 15th, 20 cents; 17th, 20 cents; 18th, 10 cents	1.55	
	4. Hack to Solinger suburbs and return	.75	
	8. To Eureka, Dr. Buell, $1; dinner, 75 cents	1.75	
	10. Fare to see tank and well-man	1.00	
	14. Dinner, $1; supper, 75 cents	1.75	
	To Sergist's ast. tank, hack, etc	.75	
	15. Dinner, 75 cents; supper at restaurant, 75 cents	1.50	
	17. Dinner, 75 cents; supper at restaurant, $1	1.75	
	18. Bill at Campbell's, Fort Smith, von. 1	18.00	
	Self and luggage to depot for Topeka, Kans	1.00	
	Railroad fare, Fort Smith to Kansas City, en route	10.60	
	Dinner, Chester	1.00	
	Seat and sleeper to Kansas City, 50 cents and $3	3.50	
	Supper, Monett	.75	
	Transfer at Springfield to Gulph Route, night	.25	
	19. Breakfast Kansas City	.75	
	Railroad fare, Kansas City to Topeka, Kans., and seat	2.75	
	Self and luggage to Copeland House, evening, at Topeka.	1.00	
	Street-car fare, 20 cents; 20th, 10 cents; 22d, 15 cents; 24th, 20 cents	.65	
	25. To North Topeka and return, hack	1.00	
	Dinner, Topeka	.75	
	26. Street car fare, 20 cents; 27th, 10 cents; 28th, 30 cents; 29th, 35 cents	.95	
	30. Bill at Copeland House to date, von. 2 (Sept. 19th to date, at $3)	36.00	
	Affidavit to account	.25	
			334.50

		David A. Fisher:		
		For services as examiner, Department of Justice, from Sept. 1, 1888, to Sept. 30, 1885, dates inclusive, 30 days, at $8 per day	$240.00	
		For expenses actually and necessarily incurred, as per following statement:		
1888.				
Sept.	7.	Hotel, Springfield, Ill., vou. 1	17.25	
		Transferring baggage, hotel to depot, Springfield, Ill	.25	
		Railroad fare, Springfield, Ill., to Omaha, Nebr	10.80	
		Sleeping-car fare, Springfield, Ill., to Kansas City, Mo	2.00	
	8.	Breakfast at Kansas City, Mo., and baggage to depot	.75	
	30.	Hotel, Omaha, Nebr., vou. 2	56.85	
		Jurat to this account	.25	
				$328.15
		Thomas B. Hardin:		
		For services as examiner from Sept. 1, 1888, to Sept. 30, 1888, dates inclusive, 30 days, at $6 per day	180.00	
		For expenses actually and necessarily incurred, as per following statement:		
	11.	Hotel bill at Sioux City, Iowa, vou. 1	25.50	
		Expressage on clerk's accounts, vou. 2	.30	
		Porterage on baggage between hotel and depot	.20	
		Railway fare, Sioux City to Merrill, Iowa	.55	
	12.	Board and lodging at Merrill, vou. 3	.75	
		Railway fare to Alton from Merrill, Iowa	.70	
		Railway fare, Alton to Sheldon, Iowa	.50	
		Hire of train at Sheldon, vou. 4	1.00	
		Transportation of baggage, depot to hotel, Sheldon	.25	
	13.	Board and lodging at Sheldon, Iowa, vou. 5	2.00	
		Railway fare, Sheldon to Ashton, Iowa	.30	
		Dinner at Ashton	.50	
		Transportation, self and baggage by team, Ashton to Sibley, Iowa, vou. 6	1.00	
	14.	Board and lodging at Sibley, Iowa, vou. 7	2.00	
		Railway fare, Sibley to Sheldon, Iowa	.50	
		Supper at Sheldon	.50	
		Railway fare, Sheldon to Hull, Iowa	.45	
	15.	Board and lodging at Hull, vou. 8	.85	
		Railway fare, Hull to Sanborn, Iowa	.72	
	16.	Board and lodging at Sheldon, Iowa, vou. 9	3.25	
		Transfer of baggage, Chicago, Milwaukee and St. Paul depot to Cherokee and Dakota depot at Sheldon	.25	
		Railway fare, Sheldon to Cherokee, Iowa	1.16	
	17.	Hotel bill at Cherokee, vou. 10	1.75	
		Railway fare, Cherokee to Washta, Iowa	.47	
		Dinner at Washta	25	
		Transportation by team, Washta to Correctionville, vou. 11	1.50	
	18.	Board and lodging at Correctionville, vou. 12	2.00	
		Railway fare, Correctionville to Onawa, Iowa	1.11	
		Transportation of self, by team, Onawa to Whitney, Iowa, vou. 13	2.00	
		Telephone message, from Whitney to the postmaster at Sloan, Iowa, vou. 14	.25	
		Railway fare, Whitney to Onawa	.25	
	19.	Board and lodging at Onawa, Iowa, vou. 15	1.50	
		Transportation of baggage, I. C. depot to N. W. depot at Onawa	.25	
		Railway fare, Onawa to Castana, Iowa	.35	
		Porterage on baggage, depot to post-office, Castana	.10	
		Railway fare, Castana to Mapleton, Iowa	.27	
		Dinner and supper at Mapleton, Iowa	1.00	
		Railway fare, Mapleton to Ida Grove, Iowa	.66	
	20.	Board and lodging at Ida Grove, vou. 16	1.00	
		Transfer of baggage to and from hotel, Ida Grove	.50	
		Railway fare, Ida Grove to Adebolt	.37	
		Dinner at Adebolt	.50	
		Supper at Adebolt	.35	
		Railway fare, from Adebolt to Grand Junction, Iowa	1.90	
		Railway fare, from Grand Junction to Ogden, Iowa	.35	

1888.		David A. Fisher—Continued.		
Sept.	21.	Board and lodging at Ogden, vou. 17	$1.00	
		Transfer baggage, N. W. depot to Minneapolis and St. Louis depot at Ogden	.25	
		Railway fare, Ogden to Ft. Dodge, Iowa	1.05	
		Bus fare at Ft. Dodge, depot to hotel	.25	
		Telegram from Ft. Dodge to postmaster at Sioux City, vou. 18	.20	
	25.	Board and lodging at Ft. Dodge, vou. 19	8.50	
		Bus fare to depot at Ft. Dodge	.25	
		Railway fare, Ft. Dodge to Webster City, Iowa	.60	
		Supper at Webster City	.50	
		Railway fare, Webster City to Iowa Falls	.90	
	26.	Board and lodging at Iowa Falls, vou. 20	1.00	
		Bus fare to and from hotel, at Iowa Falls	.50	
		Transfer of baggage, I. C. depot to Burlington depot, at Iowa Falls	.25	
		Dinner at Iowa Falls	.50	
		Railway fare, Iowa Falls to Wellsburgh, Iowa	.65	
		Transfer of baggage to and from hotel at Wellsburgh	.50	
		Supper at Wellsburgh	.25	
		Railway fare, Wellsburgh to Grundy Centre, Iowa	.45	
	27.	Bus fare to hotel, Grundy Centre (2 a. m.)	.25	
		Board and lodging at Grundy Centre, vou. 21	1.00	
		Railway fare, Grundy Centre to Reinbeck, Iowa	.30	
		Transfer of baggage, Burlington depot to Diagonal depot at Reinbeck	.25	
		Railway fare, Reinbeck to Waterloo, Iowa	.53	
		Supper at Waterloo	.45	
		Transfer of baggage, depot to hotel, Waterloo, Iowa	.25	
	28.	Board and lodging at Waterloo, Iowa, vou. 22	2.00	
		Bus fare, hotel to depot, Waterloo	.25	
		Railway fare, Waterloo to Dubuque, Iowa	2.80	
		Pullman-car, Waterloo to Dubuque, Iowa	.50	
		Bus fare and baggage, depot to hotel, Dubuque	.50	
	30.	Board and lodging at Dubuque, vou. 23	5.75	
		Jurat to account	.25	
				$274.59
		Frank Strong:		
Oct.	31.	For services as general agent, Department of Justice, from Oct. 1, 1888, to Oct. 31, 1888, dates inclusive, 31 days, at $10 per day		310.00
		James W. Nightingale:		
		For services as examiner, Department of Justice, from Oct. 1, 1888, to Oct. 31, 1888, dates inclusive, 31 days, at $8 per day		248.00
		William N. McKenney:		
		For services as examiner, from Oct. 1, 1888, to Oct. 31, 1888, dates inclusive, 31 days, at $7 per day		217.00
		David A. Fisher:		
		For services as examiner, Department of Justice, from Oct. 1, 1888, to Oct. 31, 1888, dates inclusive, 31 days, at $8 per day	248.00	
		For expenses actually and necessarily incurred, as per following statement:		
	2.	Hotel, Omaha, Nebr., vou. 1	3.75	
		Railroad fare, Omaha to Lincoln, Nebr	1.65	
		Parlor-car fare, Omaha to Lincoln, Nebr	.25	
	3.	Hotel, Lincoln, Nebr., vou. 2	2.00	
		Railroad fare, Lincoln, Nebr., to Omaha, Nebr	1.65	
	13.	Hotel, Omaha, Nebr., vou. 3	30.00	
		Railroad fare, Omaha, Nebr., to Washington, D. C	30.25	
		Transferring baggage, hotel to depot, Omaha, Nebr	.50	
	14.	Sleeping-car fare, Des Moines, Iowa, to Chicago, Ill	2.00	
	15.	Breakfast on dining-car	.75	
		Dinner at Chicago, Ill	.80	
		Necessary porterage, Chicago, Ill	.25	
		Sleeping-car fare, Chicago, Ill., to Pittsburgh, Pa	2.50	
	16.	Breakfast at Lima, Ohio	.75	
		Dinner at Crestline, Ohio	.75	

1888.			
	Frank Strong—Continued.		
Oct. 16.	Lunch at Pittsburgh, Pa	$0.60	
	Necessary porterage at Pittsburgh, Pa	.25	
	Sleeping-car fare, Pittsburgh, Pa., to Washington, D. C.	2.00	
17.	Necessary porterage, Washington, D. C	.25	
	Transferring baggage, depot to hotel, Washington, D. C.	.25	
	Jurat to this account	.25	
			$329.45
	J. Monroe Heiskell:		
31.	For services as examiner, Department of Justice, from Oct. 1, 1888, to Oct. 31, 1888, dates inclusive, 31 days, at $8 per day		248.00
	Thomas B. Hardin:		
	For services as examiner, from Oct. 1, 1888, to Oct. 31, 1888, dates inclusive, 31 days, at $6	186.00	
	For expenses actually and necessarily incurred, as per following statement:		
6.	5½ days' board and lodging at Dubuque, Iowa, vou. 1	13.75	
	Railway fare, Dubuque to Council Bluffs, Iowa	10.25	
	Sleeping-car fare, Sabula Junction, Iowa, to Council Bluffs	2.00	
	Bus fare, hotel to depot, at Dubuque, Iowa	.25	
	Supper on dining-car (en route) to Council Bluffs	.75	
7.	Bus and baggage, depot to hotel, at Council Bluffs	.50	
9.	Two and a half days' board and lodging at Council Bluffs, vou. 2	8.00	
	Bus and baggage, hotel to depot, at Council Bluffs	.50	
	Railway fare, Council Bluffs to Des Moines, Iowa	4.50	
	Sleeping-car fare, Council Bluffs, to Des Moines, Iowa	1.50	
	Supper at Avoca, Iowa	.20	
	Bus fare, depot to hotel, at Des Moines	.25	
25.	Sixteen days' board and lodging at Des Moines, vou. 3	48.25	
	Bus fare, hotel to depot, at Des Moines	.25	
	Railway fare, Des Moines to Keokuk, Iowa	5.03	
	Sleeping-car fare, Des Moines to Keokuk, Iowa	1.50	
26.	Bus fare and baggage, depot to hotel, Keokuk	.50	
31.	6 days' board and lodging at Keokuk, vou. 4	15.00	
	Jurat to account	.25	
			299.23
	Leigh Chalmers:		
	For services as examiner, Department of Justice, from Oct. 1, 1888, to Oct. 31, 1888, dates inclusive, 31 days, at $8 per day	248.00	
	For expenses actually and necessarily incurred, as per following statement:		
17.	Railroad fare, from Washington, D. C., to Austin, Tex	40.45	
	Sleeper from Washington, D. C., to Cincinnati	3.00	
	Self and baggage from hotel to depot	.75	
	Dinner	.75	
	Supper	.75	
	Sleeping-car porter, at Cincinnati	.25	
	Breakfast	.75	
18.	Parlor car, Cincinnati, to St. Louis	1.00	
	Dinner on train	.90	
	Supper at St. Louis	.75	
	Sleeper from St. Louis to Austin, Tex	6.50	
19.	Breakfast, 75 cents; dinner, 75 cents; supper, 80 cents.	2.30	
20.	Breakfast on train	.85	
	Self and luggage to room, 75 cents; porterage, 25 cents.	1.00	
	Dinner, 75 cents; supper, 50 cents	1.25	
21.	Breakfast, 75 cents; dinner, 75 cents; supper, 50 cents	2.00	
22.	Breakfast, 75 cents; dinner, 80 cents; supper, 50 cents	2.05	
23.	Breakfast, 65 cents; dinner, 85 cents; supper, 65 cents	2.15	
24.	Breakfast, 75 cents; dinner, 85 cents; supper, 75 cents	2.35	
25.	Dinner, 90 cents; supper, 60 cents	1.50	
26.	Breakfast, 75 cents; dinner, 85 cents; supper, 75 cents	2.35	
27.	Breakfast, 85 cents; dinner, 75 cents; supper, 75 cents	2.35	
28.	Breakfast, 75 cents; supper, 75 cents	1.50	
29.	Breakfast, 85 cents; dinner, 90 cents; supper, 50 cents	2.25	

1888.		Leigh Chalmers—Continued.		
Oct.	30.	Breakfast, 75 cents; dinner, 90 cents; supper, 70 cents..	$02.35	
	31.	Breakfast, 75 cents; dinner, 85 cents.....	1.60	
		Room rent, vou. 1.....	5.00	
				$336.70
		D. Ira Baker:		
		For services as examiner, Department of Justice, from Oct. 1, 1888, to Oct. 31, 1888, dates inclusive, 31 days, at $8 per day	248.00	
		For expenses actually and necessarily incurred as per following statement:		
	5.	Railway guide to calculate distances	.50	
	6.	Street-car fare, Topeka, Kans.....	.35	
	7.	Bill at Copeland House, Topeka, vou. 1	18.75	
		Self and luggage to railroad depot for Garden City, etc.	1.00	
		Railroad fare to Garden City	9.63	
		Seat, parlor-car, to Newton, (en route).....	1.00	
	8.	Depot Hotel, bill at Newton, vou. 2	1.25	
		Breakfast; Hutchinson (en route)	.75	
		Seat in parlor-car to Garden City.....	1.00	
		Dinner, Kinsley, en route	.75	
		To hotel at Kinsley and return to depot for Garden City	.50	
		Supper at Garden City	.50	
		Railroad fare, Garden City to Arkansas City.....	8.83	
		Sleeper, Garden City to Arkansas City.....	2.00	
	9.	Breakfast en route	.75	
		Dinner at Wichita, 75 cents; supper at Wichita, 75 cents	1.50	
		Seat, Newton to Arkansas City	.75	
		Self and luggage to Hotel Gladstone, Arkansas City....	.75	
	10	Bill at Hotel Gladstone, Arkansas City, vou. 3	2.00	
		Self and luggage to railroad depot	.75	
		Railroad fare to Columbus, Kans	4.45	
		Seat in car to Columbus, 50 cents; to hotel at Columbus, 50 cents.....	1.00	
		Dinner en route (Neosha, 50 cents) to Columbus.....	.50	
	11.	Bill at Palace Hotel, Columbus, vou. 4	1.50	
		To Baxter Springs from Columbus (buggy), vou. 5	2.00	
		Dinner, Baxter Springs, 50 cents; to railroad depot, self and luggage, 50 cents	1.00	
		Railroad fare to Joplin, 40 cents; to hotel at Joplin, 25 cents	.65	
		Supper at Joplin, 75 cents; hack to depot (midnight), 75 cents	1.50	
		Transfer luggage from Ft. Scott depot to Mo. Pac. depot	.25	
		Railroad fare, Joplin to Leavenworth, Kans.....	5.50	
		Sleeper, Joplin to Leavenworth, Kans	2.00	
	12.	Breakfast, Kansas City, en route	.75	
		Self and luggage to Delmonico Hotel, Leavenworth....	.50	
	13.	Fare to North Leavenworth and return.....	.50	
	16.	To railroad depot for Atchison, 25 cents; railroad fare to Atchison, 68 cents.....	.93	
		Dinner at Atchison	.75	
	19	Bill at Delmonico Hotel, vou. 6	14.50	
		Self and luggage to railroad depot for Topeka, Kans...	1.00	
		Railroad fare, Leavenworth to Topeka, $1.68; seat, 75 c.	2.43	
		Self and luggage to Hotel Throop, Topeka.....	.75	
	20	Bill at Hotel Throop, Topeka, vou. 7	4.25	
		Self and luggage to depot, en route east.....	.75	
		Railroad fare to Chicago, $14.01; sleeper to Chicago, $3.	17.01	
		Dinner en route, dining-car, $1; supper, $1.....	2.00	
	21	Breakfast, $1; self and luggage to Tremont House, Chicago, $1	2.00	
		Train delayed—no connection—and Sunday had to remain in Chicago till next through train.		
	22.	Bill at Tremont House, Chicago, vou. 8.....	4.50	
		Self and luggage to railroad depot.....	.75	
		Railroad fare to New York, Pennsylvania road.....	20.00	
		Sleeper to New York, Pennsylvania road.....	5.00	
		Supper en route, dining-car	1.00	

1888.		D. Ira Baker—Continued.		
Oct.	23.	Breakfast en route, dining-car	$1.00	
		Dinner en route, dining-car	.75	
		Supper en route, dining-car	1.00	
		To Hotel Normandie, New York City, self and luggage	.75	
	26.	Breakfast at restaurant	1.00	
		Street-car fare, New York City	*.20	
		Dinner, $1.25; supper, 75 cents	2.00	
	27.	Breakfast, 75 cents; dinner, $1; supper, $1	2.75	
	28.	Street-car fare, New York and Brooklyn	*.45	
		Breakfast, 75 cents; dinner, $1.20; supper, 85 cents	2.80	
	29.	Breakfast, 95 cents; dinner, 80 cents; supper, $1	2.75	
	30.	Breakfast	.75	
		Street-car fare, New York City	*.20	
		Dinner, $1.10; supper, 75 cents	1.85	
	31.	Street-car fare to U. S. office, etc., 4 times each way	*.80	
		Breakfast, 75 cents; dinner, $1.15; supper, $1	2.90	
		Bill at Hotel Normandie to Nov. 1, for room	7.00	
		Affidavit to account	.25	
			430.23	
		By disallowances as above	1.65	
				$428.50
		Frank Strong:		
	31.	For expenses actually and necessarily incurred, as per following statement:		
		Bill of Western Union Telegraph Company for Sept., 1888, vou. 1	1.61	
	30.	Washington to Fort Smith, Ark., on transportation order No. 283—		
		Sleeper, Washington to St. Louis	5.00	
		Self and trunk to depot, Washington	.50	
	31.	Breakfast at Pittsburgh, 75 cents; dinner at Columbus, 75 cents	1.50	
		Supper on train	.50	
		Jurat	.25	
				9.36
		Frank Strong:		
Nov.	30.	For services as general agent, Department of Justice, from Nov. 1, 1888, to Nov. 30, 1888, dates inclusive, 30 days, at $10 per day	300.00	
		For expenses actually and necessarily incurred, as per following statement:		
	1.	Necessary porterage at St. Louis, 25 cents; breakfast, 75 cents	1.00	
		Sleeper, St. Louis, Mo., to Fort Smith, Ark	3.00	
		Dinner at Newburgh, Mo., 50 cents; supper at Monet, Mo., 75 cents	1.25	
		Self and trunk to hotel, Fort Smith, Ark	.75	
	2.	Breakfast, 50 cents; dinner, 50 cents; supper, 50 cents; at Fort Smith	1.50	
		Use of hack to see United States judge, etc	2.50	
	3.	Room at hotel, Fort Smith, vou. 1	1.50	
		Railroad fare, Fort Smith to Little Rock, Ark	4.00	
		Breakfast, Fort Smith, 50 cents; baggage to depot, 50 cents	1.00	
		Dinner, Russellville, Ark	.50	
		Cab from station, Little Rock	.50	
	6.	Transportation order No. 274, from Little Rock to El Paso.		
		Hack to penitentiary and return (for self and assistant), and to depot, vou. 2	5.00	
		Sleeper, Little Rock to El Paso	7.50	
		Dinner 75 cents and supper 50 cents, on train	1.25	
	7.	Breakfast 50 cents and dinner 85 cents, on train	1.35	
		Supper 75 cents, Big Spring	.75	
	8.	Breakfast, Sierra Blanca	.75	
		Conveyance to hotel and necessary porterage	1.00	

* Disallowed.

1888.		Frank Strong—Continued.	
Nov.	8.	Street-car fare	$0.20
	9.	Hotel bill at El Paso, including baggage to depot, vou. 3.	4.25
		Sleeper, El Paso to Tucson, Ariz	2.50
		Transportation order No. 275, from El Paso to San Francisco.	
		Supper at Bowie, Ariz	.75
	10.	Necessary porterage at Tucson	.50
	11.	Hotel bill at Tucson, Ariz., vou. 4	3.50
		Sleeper, Tucson to Los Angeles, Cal	3.50
		Breakfast on train, 55 cents; dinner at Indio, 75 cents.	1.30
		Self and trunk to hotel, Los Angeles	1.00
	13.	Hotel bill, Los Angeles, Cal., vou. 5	5.75
		Conveyance to depot, $1; necessary porterage, 50 cents.	1.50
		Supper at Mojave	.75
	14.	Breakfast at Lathrop, 75 cents; necessary porterage, 50 cents	1.25
		Self and trunk to hotel, San Francisco	1.00
	15.	Railroad fare, San Francisco to San Quentin and return	.50
		Street cars, 20 cents; railroad to Oakland and back, on 16th, 25 cents; street cars, 30 cents	.75
	17.	Hotel bill, San Francisco, Cal., and baggage to depot, vou. 6	13.50
		Sleeper, San Francisco to Ogden, $6; necessary porterage, 50 cents	6.50
		Conveyance to United States court and to depot, San Francisco	1.00
		Baggage to depot	.50
		Transportation order No. 276, San Francisco to Ogden, Utah.	
		Supper, at Sacramento	.75
	18.	Breakfast, at Reno, 75 cents; dinner, Humboldt, 75 cents, supper, Elko, 75 cents	2.25
	19.	Breakfast, Ogden, 75 cents; necessary porterage, 50 cents.	1.25
		Railroad fare, Ogden to Salt Lake, $1.50; Pullman car, 25 cents	1.75
		Depot to hotel, Salt Lake	.25
		Telegram from Attorney-General, repeated from Salt Lake, vou. 7	.35
		Hotel bill, Salt Lake, vou. 8	4.50
		Self and trunk to depot, Salt Lake	.50
	20.	Railroad fare, Salt Lake to Ogden	1.50
		Sleeper, Salt Lake to Omaha	8.00
		Necessary porterage at Salt Lake	.50
		Transportation order No. 277, Ogden to Omaha.	
	21.	Breakfast at Green River, 75 cents; necessary porterage, 25 cents	1.00
		Dinner, Rawlins, 75 cents; supper at Laramie, 75 cents.	1.50
	22.	Breakfast, North Platte, 75 cents; dinner, Grand Island, 75 cents; lunch, Council Bluffs, 50 cents	2.00
		Bridge fare to Council Bluffs, 15 cents; necessary porterage, 25 cents	.40
		Railroad fare, Council Bluffs to Chicago, Ill	12.50
		Sleeper, Council Bluffs to Chicago, Ill	2.50
	23.	Breakfast on train, 75 cents; depot to hotel, 50 cents	1.25
	24.	Hotel bill, Chicago, Ill., vou. 9	4.00
		Self and trunk to depot	1.00
		Railroad fare, Chicago to Detroit, $8; Pullman car, $1	9.00
		Dinner at Marshall, Mich	.75
		Self and trunk to hotel, Detroit	1.00
	25.	Street-car fare, Detroit	.20
		Hotel bill and fire, Detroit	5.50
		Self and trunk to depot, Detroit	1.00
		Railroad fare to Rochester, N. Y., $8.35; sleeper, $2.50	10.85
	26.	Breakfast on train, $1; necessary porterage, Buffalo, 25 cents	1.25
		Wagner car, Buffalo to Rochester	.50
		Railroad fare, Rochester to Washington, $10.48; sleeper, $2	12.48
	27.	Necessary porterage	.25

1888.		Frank Strong—Continued.		
Nov.	27.	Self and trunk from depot, Washington	$1.00	
	31.	Bill of Western Union Telegraph Company for Oct., 1888, vou. 11	4.60	
		Jurat	.25	
				$481.98
		J. Monroe Heiskell:		
	30.	For services as examiner, Department of Justice, from Nov. 1, 1888, to Nov. 30, 1888, dates inclusive, 30 days, at $8 per day		240.00
		Thomas B. Hardin:		
		For services as examiner from Nov. 1, 1888, to Nov. 30, 1888, dates inclusive, 30 days, at $6 per day	180.00	
		For services actually and necessarily incurred, as per following statement:		
	7.	Hotel bill at Keokuk, Iowa, vou. 1	16.25	
		Railroad fare, Keokuk, Iowa, to Council Bluffs, Iowa	10.11	
		Supper at Burlington, Iowa	.75	
		Sleeping-car fare, Keokuk to Council Bluffs	2.25	
	8.	Transportation self and baggage, depot to hotel, Council Bluffs	.50	
	14.	Hotel bill at Council Bluffs, Iowa, vou. 2	20.50	
	8.	Necessary porterage Council Bluffs	.15	
	14.	Transportation self and baggage to transfer depot, Council Bluffs, Iowa	1.00	
		Railroad fare, Council Bluffs to Shenandoah, Iowa	1.46	
	16.	Board and lodging at Shenandoah, Iowa, vou. 3	3.50	
		Bus fare at Shenandoah	.25	
		Railroad fare, Shenandoah to Clarinda, Iowa	.65	
		Hotel bill at Clarinda, vou. 4	1.50	
		Bus and baggage to and from hotel at Clarinda	.50	
		Railroad fare, Clarinda to Corning, Iowa	.90	
	17.	Hotel bill at Corning, vou. 5	1.50	
		Railroad fare, Corning, Iowa, to Creston, Iowa	.65	
		Necessary porterage	.10	
	19.	Hotel bill at Creston, Iowa, vou. 6	6.00	
		Necessary porterage	.25	
		Railroad fare, Creston, Iowa, to Albia, Iowa	2.72	
		Pullman-car fare, Creston to Albia, Iowa	.50	
		Bus fare to and from hotel at Albia	.25	
	20.	Hotel bill at Albia, Iowa, vou. 7	1.75	
		Railroad fare, Albia to Des Moines, Iowa	2.04	
		Telegram to Express Company at Council Bluffs, vou. 8	.22	
	21.	Expressage on account from Council Bluffs to Des Moines, Iowa, vou. 9	.35	
		Telegram to U. S. Marshal Campbell, at Fairfield, Iowa, vou. 10	.31	
		Railroad fare, Des Moines, Iowa, to Washington, D. C.	27.65	
		Sleeper, Des Moines, Iowa, to Chicago, Ill.	2.00	
		Hotel bill at Des Moines, Iowa, vou. 11	5.25	
		Bus and baggage to and from hotel at Des Moines	.50	
	22.	Breakfast on dining-car en route to Chicago	.75	
		Dinner at Chicago	.95	
		Baggage at Chicago	.45	
		Pullman-car fare, Chicago to Pittsburgh, Pa.	2.50	
		Supper at Fort Wayne, Ind.	.75	
	23.	Breakfast at Pittsburgh, Pa.	.75	
		Pullman-car fare, Pittsburgh, Pa., to Washington, D. C.	2.00	
		Supper on train	.50	
	24.	Necessary porterage	.25	
		Transportation self and baggage, depot to residence, at Washington, D. C.	.85	
		Jurat to account	.25	
				302.31
		Howard Perry:		
		For expenses actually and necessarily incurred under direction of the Attorney-General's letter, dated Oct. 30, 1888, as per following statement:		
	30.	Railroad fare, Washington, D. C., to Fort Smith, Ark., transportation order No. 286.		
		Sleeper, Washington, D. C., to St. Louis, Mo.	5.00	

1888.		Howard Perry—Continued.	
Nov.	30.	Self and luggage to depot, Washington, D. C	$0.75
	31.	Breakfast, Pittsburgh, Pa., 75 cents; dinner, Columbus, Ohio, 75 cents	1.50
		Supper on train	.45
	1.	Necessary porterage, St. Louis, Mo	.50
		Breakfast, St. Louis, Mo	.75
		Sleeper, St. Louis to Fort Smith, Ark	3.00
		Dinner, Newburgh, Mo., 50 cents; supper, Monette, Mo., 75 cents	1.25
	2.	Baggage, necessary porterage, and hack to hotel, Fort Smith	.75
		Breakfast, 50 cents; dinner, 50 cents; supper, 50 cents, Fort Smith	1.50
	3.	Breakfast, Fort Smith, 50 cents; baggage to depot, 50 cents	1.00
		Room, Fort Smith, vou. 1	1.50
		Railroad fare, Fort Smith to Little Rock, Ark	4.90
		Baggage to hotel, Little Rock, and necessary porterage.	.50
		Dinner, Russellville, Ark., 50 cents; hack to hotel, Little Rock, 25 cents	.75
	5.	Street-car, Little Rock	.05
	6.	Hotel bill, Little Rock, vou. 2	9.85
		Necessary porterage, Little Rock	.25
		Railroad fare, Little Rock to El Paso, Tex., transportation order No. 287.	
		Sleeper, Little Rock to El Paso, Tex	7.50
		Supper on train	1.20
	7.	Breakfast, Fort Worth, Tex., 75 cents; dinner on train, 85 cents	1.60
		Supper, Big Springs, Tex	.75
	8.	Breakfast, Sierra Blanca, Tex	.75
		Necessary porterage, El Paso, Tex	.50
		Omnibus to hotel, El Paso, Tex	.25
	9.	Hotel bill, El Paso, vou. 3	4.25
		Necessary porterage, El Paso	.25
		Railroad fare, El Paso to San Francisco, Cal., transportation order No. 288.	
		Sleeper, El Paso to Tucson, Ariz	2.50
		Lunch on train, 25 cents; supper, Bowie, 75 cents	1.00
		Necessary porterage, Tucson	.25
	10.	Hotel bill, Tucson, Ariz., vou. 4	3.50
		Necessary porterage, Tucson, 25 cents; sleeper to Los Angeles, $3.50	3.75
	11.	Breakfast on train, 60 cents; dinner, Indio, Cal., 75 cents.	1.35
		Necessary porterage, Los Angeles	.25
		Self and baggage to hotel, Los Angeles	1.00
	13.	Hotel bill, Los Angeles, vou. 5	5.75
		Baggage to depot, and necessary porterage	.75
		Sleeper to San Francisco, Cal, $2.50; supper, Mojave, 75 cents	3.25
	14.	Breakfast, Lathrop, Cal	.75
		Necessary porterage, San Francisco, Cal	.25
		Hack to hotel, San Francisco	.50
	15.	Fare to San Quentin and return	.50
	16.	Street-car, San Francisco	.10
		Fare to Oakland and return to San Francisco	.25
	17.	Railroad fare, San Francisco to Ogden, Utah, transportation order No. 290.	
		Sleeper, San Francisco to Ogden	6.00
		Hotel bill, San Francisco, Cal., vou. 6	13.50
		Carriage to court-house and depot and necessary porterage, San Francisco	1.25
		Baggage to depot, San Francisco	.50
		Supper, Sacramento, Cal	.75
	18.	Breakfast, Reno, Nev., 75 cents; dinner, Humboldt, Nev., 75 cents	1.50
		Supper, Elko, Nev	.75
	19.	Breakfast, Ogden, Utah	.75
		Railroad fare, Ogden to Salt Lake City, Utah	1.50

1888.		Howard Perry—Continued.		
Nov.	19.	Pullman, Ogden to Salt Lake City, Utah	$0.25	
		Necessary porterage, Ogden	.50	
		Baggage to hotel, Salt Lake City	.25	
	20.	Railroad fare, Salt Lake City to Ogden	1.50	
		Railroad fare, Ogden to Omaha, Nebr., transportation order No. 289.		
		Sleeper, Salt Lake City to Omaha, Nebr	8.00	
		Hotel bill, Salt Lake, vou. 7	4.50	
		Baggage and bus to depot, Salt Lake	.50	
	21.	Breakfast, Green River, 75 cents; necessary porterage, Green River, 25 cents	1.00	
		Dinner, Rawlins, 75 cents; supper, Laramie, 75 cents; necessary porterage, Cheyenne, 25 cents	1.75	
	22.	Breakfast, North Platte, 75 cents; dinner, Grand Island, 75 cents	1.50	
		Lunch, Council Bluffs, 20 cents; necessary porterage at Council Bluffs, 25 cents	.45	
		Railroad fare, Council Bluffs to Chicago, Ill	12.50	
		Sleeper, Council Bluffs to Chicago, Ill	2.50	
		Bridge fare, Omaha to Council Bluffs	.15	
	23.	Breakfast on cars, 75 cents; necessary porterage, Chicago, 25 cents	1.00	
		Baggage to hotel, Chicago	.25	
	24.	Hotel bill, Chicago, vou. 8	4.00	
		Carriage and baggage to depot, Chicago	.75	
		Railroad fare, Chicago to Detroit, Mich	8.00	
		Pullman, Chicago to Detroit, Mich	1.00	
		Dinner, Marshal, Mich., 75 cents; necessary porterage, Detroit, 25 cents	1.00	
		Carriage to hotel, Detroit	.50	
	25.	Hotel bill, Detroit, vou. 9	4.25	
		Carriage and baggage to depot, Detroit, Mich	1.00	
		Railroad fare, Detroit to Buffalo, N. Y	7.00	
		Sleeper, Detroit to Buffalo, N. Y	2.00	
	26.	Breakfast, Buffalo, 15 cents; necessary porterage, Buffalo, 25 cents	.40	
		Carriage, depot to penitentiary, Buffalo	.50	
		Carriage, hotel to depot, Buffalo	.50	
		Railroad fare, Buffalo to Washington, D. C	11.20	
		Sleeper, Rochester to Washington, D. C	2.00	
		Dinner, on car	1.20	
	27.	Breakfast on car, 35 cents; necessary porterage, Washington, D. C., 25 cents	.60	
		Baggage to residence, Washington, D. C	.25	
		Cab to residence, Washington, D. C	.50	
		Jurat	.25	
				$167.00
		James W. Nightingale:		
	30.	For services as examiner, Department of Justice, from Nov. 1, 1888, to Nov. 30, 1888, dates inclusive, 30 days at $8 per day		240.00
		David A. Fisher:		
		For services as Examiner, Department of Justice, from Nov. 1, 1888, to Nov. 30, 1888, dates inclusive, 30 days, at $8 per day	240.00	
		For expenses actually and necessarily incurred, as per following statement:		
	4.	Transferring baggage, hotel to depot, Washington, D. C.	.25	
		Railroad ticket, Washington, D. C., to Kansas City, Mo.	28.00	
		Sleeping-car fare, Washington, D. C., to Tiffin, Ohio	3.50	
		Dinner on dining-car	.75	
		Supper at Grafton, W. Va	.75	
	8.	Sleeping-car fare, Tiffin, Ohio, to Chicago, Ill	1.50	
	9.	Breakfast in Chicago, Ill. (Arrived at 6:30 a. m.)	1.00	
		Dinner in Chicago, Ill. (Left at 2 p. m.)	.60	
		Sleeping-car fare, Chicago, Ill., to Kansas City, Mo	2.50	
		Supper on dining-car	.75	
	10.	Transferring baggage, depot to hotel, Kansas City, Mo.	.50	

1888.		James W. Nightingale—Continued.		
Nov.	30.	Hotel, Kansas City, Mo., vou. 1	$63.00	
		Jurat to account	.25	
				$343.25
		D. Ira Baker:		
	30.	For services as examiner, Department of Justice, from Nov. 1, 1888, to Nov. 30, 1888, dates inclusive, 30 days, at $8 per day	240.00	
		For services actually and necessarily incurred, as per following statement:		
	1.	Breakfast, New York City, $1; street-car fare, 20 cents	1.20	
		Street-car fare	.30	
		Dinner, $1.15; supper, $1, at restaurant	2.15	
	2.	Breakfast, 90 cents; dinner, $1.10, at restaurant	2.00	
		Street-car fare, New York, bridge and Brooklyn	.56	
		Supper, 75 cents; street-car fare, 20 cents	.95	
	3.	Breakfast, 75 cents; dinner, $1; supper, $1, at restaurant	2.75	
	4.	Breakfast, 85 cents; dinner, $1; supper, 50 cents, restaurant	2.35	
	5.	Breakfast, 75 cents; dinner, $1; supper, $1, restaurant	2.75	
	6.	Breakfast, 80 cents; dinner, $1; supper, $1, restaurant	2.80	
		Bill at Hotel Normandie, vou. 1	6.00	
	7.	Breakfast, $1; dinner, $1; supper, 75 cents, restaurant	2.75	
		Self and luggage to railroad depot for Washington, D.C.	1.00	
		Railroad fare to Washington, D. C	6.50	
		Sleeper to Washington	2.50	
	8.	Breakfast en route—buffet-cars	.50	
		Self and luggage to hotel, Washington	.75	
	23.	To railroad depot, Washington, self and luggage, for Danville, Va	.75	
		Railroad fare, Washington, to seat in sleeper, Washington to Danville, Va	7.15	
		Seat in sleeper, Washington to Danville, Va	1.25	
		Dinner, buffet-car, 90 cents; supper do, 85 cents	1.75	
		Self and luggage, Arlington Hotel, Danville	.75	
	24.	Street-car fare, Danville, 10 cents; 27th, 10 cents	.20	
	28.	Bill at Arlington Hotel, Danville, vou. 2	9.50	
		To railroad depot, self and luggage, for Lynchburgh, Va.	.75	
		Railroad fare, Danville to Lynchburgh, and seat	2.75	
		Dinner en route, buffet-car	1.05	
	30.	Bill at Lynchburgh hotel and to and from depot, vou. 3	6.00	
		Railroad fare, Lynchburgh to Abingdon, Va., $6; seat in sleeper, $1.25	7.85	
		Dinner en route	1.00	
		Affidavit to account	.25	
				318.81
		Leigh Chalmers:		
	31.	For services as examiner, Department of Justice, from Nov. 1, 1888, to Nov. 30, 1888, dates inclusive, 30 days, at $8 per day	240.00	
		For expenses actually and necessarily incurred, as per following statement:		
	1.	Breakfast, 75 cents; dinner, 80 cents; supper, 70 cents	2.25	
	2.	Breakfast, 75 cents; dinner, 85 cents; supper, 75 cents	2.35	
	3.	Breakfast, 85 cents; dinner, 80 cents; supper, 75 cents	2.40	
	4.	Breakfast, 85 cents; dinner, 85 cents; supper, 75 cents	2.45	
	5.	Breakfast, 75 cents; dinner, 80 cents; supper, 75 cents	2.30	
	6.	Breakfast, 80 cents; dinner, 80 cents; supper, 75 cents	2.35	
	7.	Breakfast, 85 cents; dinner, 85 cents; supper, 75 cents	2.45	
	8.	Breakfast, 80 cents; dinner, 85 cents; supper, 75 cents	2.40	
	9.	Breakfast, 75 cents; dinner, 85 cents; supper, 75 cents	2.35	
	10.	Lunch	.50	
		Room-rent, vou. 1	4.50	
		Self and baggage from room to depot	.75	
		Railroad fare, Austin to San Antonio, Tex	2.45	
		Sleeper, Austin to San Antonio, Tex	.50	
		Self and baggage from depot to hotel at San Antonio	.75	
		Necessary porterage	.25	
	11, 12, 13, 14.	Street-car fare	.60	
	15.	Hotel bill at San Antonio, vou. 2	17.50	

1888.		Leigh Chalmers—Continued.		
Nov.	17.	Hotel bill at San Antonio, vou. 3	$7.50	
		Railroad fare San Antonio to El Paso, Tex	19.00	
		Self and baggage from hotel to depot	1.00	
		Sleeper from San Antonio to El Paso	5.00	
		Dinner, 75 cents; supper, 75 cents	1.50	
	18.	Breakfast, 75 cents; porterage, 25 cents	1.00	
		Self from depot to hotel	.25	
	21.	Hotel bill at El Paso, Tex., vou. 4	11.00	
		Railroad fare, El Paso, Tex., to New Orleans, La	35.40	
		Sleeper, El Paso, Tex., to New Orleans, La	7.50	
		Self and baggage from hotel to depot	.50	
		Supper	.75	
	22.	Breakfast, 75 cents; supper, 75 cents; dinner, 75 cents	2.25	
	23.	Breakfast, 75 cents; porterage, 25 cents	1.00	
		Self and baggage from depot to hotel, New Orleans	1.00	
	24.	Car-fare from 24th to 30th	1.00	
	30.	Hotel bill at New Orleans, La., vo. 5	32.00	
		Jurat	.25	
				$417.00
		Howard Perry:		
		For expenses actually and necessarily incurred under direction of Attorney-General's letter, dated December 11, as per following statement:		
Dec.	11.	Railroad fare, Washington to New York and return	10.00	
		Sleeper, Washington to New York and return	2.00	
		Cab to depot	.50	
	12.	Necessary porterage, Jersey City	.25	
		Breakfast, New York	.80	
		Elevated and horse-car fare, New York	.15	
		Baggage, New York	.10	
		Lunch, New York	.55	
		Railroad fare, New York to Boston, Mass	5.00	
		Sleeper, New York to Boston, Mass	1.50	
	13.	Necessary porterage, Boston, Mass	.25	
		Hack to hotel, Boston	.50	
		Breakfast and dinner, Boston	2.75	
		Railroad fare, Boston to New York	5.00	
		Pullman, Boston to New York	1.00	
		Cab to depot, Boston	.25	
		Elevated and horse-car fare, New York	.10	
		Lunch, New York	.50	
		Sleeper, New York to Washington, D. C	2.00	
	14.	Necessary porterage	.25	
		Jurat	.25	
				33.70
		Thomas B. Hardin:		
	30.	For services as examiner from December 1, 1888, to December 31, 1888, dates inclusive, 31 days, at $6 per day	186.00	
		For expenses actually and necessarily incurred as per following statement:		
	10.	Transportation self and baggage, residence to B. and O. depot, Washington, D. C	1.00	
		Railroad fare, Washington to Philadelphia	4.00	
		Pullman car, Washington to Philadelphia	.75	
		Transportation self and baggage, depot to hotel, Philadelphia	1.00	
	10.	Necessary porterage	.20	
	11.	Board and lodging at Continental Hotel, Philadelphia, vou. 1	4.00	
		Transportation of baggage from Continental Hotel to Girard House	.25	
	14.	Board and lodging at Girard House, and carriage hire, same being for official use, vou. 2	13.50	
		Railroad fare, Philadelphia to Washington	4.00	
		Pullman car, Philadelphia to Washington	.75	
		Transportation self and baggage, hotel to depot, Philadelphia	1.00	
		Necessary porterage	.10	

1888.				
		Thomas B. Hardin—Continued.		
Dec.	14.	Supper at Baltimore, en route to Washington	$0.75	
		Transportation self and baggage, depot to residence at Washington	.50	
		Jurat to account	.25	
				$218.05
		Frank Strong:		
	31.	For services as general agent Department of Justice, from December 1, 1888, to December 31, 1888, dates inclusive, 31 days, at $10 per day	310.00	
		For expenses actually and necessarily incurred, as per following statement:		
		Bill of Western Union Telegraph Company for November, 1888, voucher	22.43	
		Jurat	.25	
				332.68
		David A. Fisher:		
		For services as examiner, Department of Justice, from December 1, 1888, to December 31, 1888, dates inclusive, 31 days, at $8 per day	248.00	
		For expenses actually and necessarily incurred, as per following statement:		
	13.	Hotel, Kansas City, vou. 1	36.75	
		Jurat to account	.25	
		Railroad fare, Kansas City, Mo., to Washington, D. C	27.75	
		Sleeper, Kansas City, Mo., to Chicago, Ill	2.50	
	14.	Breakfast on train	.75	
		Sleeper, Chicago, Ill., to Washington, D. C	5.00	
				321.00
		Leigh Chalmers:		
	31.	For services as examiner, Department of Justice, from December 1, 1888, to December 31, 1888, dates inclusive, 31 days, at $8 per day	248.00	
		For expenses actually and necessarily incurred, as per following statement:		
	2.	Hotel bill at New Orleans, vouch. 1	8.00	
		Transfer self and baggage from hotel to room	.75	
	3.	Breakfast, 85 cents; dinner, $1; supper, 80 cents; car fare, 20 cents	2.85	
	4.	Breakfast, 85 cents; dinner, 90 cents; supper, 85 cents; car fare, 20 cents	2.80	
	5.	Breakfast, 90 cents; dinner, $1; supper, 85 cents; car fare, 10 cents	2.85	
	6.	Breakfast, 90 cents; dinner, $1; supper, 75 cents; car fare, 15 cents	2.80	
	7.	Breakfast, 85 cents; dinner, 95 cents; supper, 85 cents; car fare, 20 cents	2.85	
	8.	Breakfast, 80 cents; dinner, $1; supper, 75 cents; car fare, 15 cents	2.70	
	9.	Breakfast, 90 cents; dinner, 95 cents; supper, 75 cents	2.60	
	10.	Breakfast, 80 cents; dinner, 90 cents; supper, 80 cents; car fare, 20 cents	2.70	
	11.	Breakfast, 85 cents; dinner, 95 cents; supper, 75 cents; car fare, 20 cents	2.75	
	12.	Breakfast, 90 cents; dinner, $1; supper, 75 cents; car fare, 10 cents	2.75	
	13.	Breakfast, 90 cents; dinner, $1; supper, 75 cents; car fare, 20 cents	2.85	
	14.	Breakfast, 85 cents; dinner, $1; supper, 85 cents; car fare, 20 cents	2.90	
	15.	Breakfast, 95 cents; dinner, $1; supper, 80 cents; car fare, 15 cents	2.90	
	15.	Room rent and fire (extra of room rent), vou. 2	17.50	
	16.	Breakfast, 80 cents; dinner, 95 cents; supper, 80 cents;	2.55	
	17.	Breakfast, 85 cents; dinner, $1; supper, 80 cents; car fare, 20 cents	2.85	
	18.	Breakfast, 85 cents; dinner, $1; supper, 75 cents; car fare, 20 cents	2.80	
	19.	Breakfast, 85 cents; dinner, 90 cents; supper, 80 cents; car fare, 15 cents	2.75	

1888.		Leigh Chalmers—Continued.		
Dec.	20.	Breakfast, 85 cents; dinner, 95 cents; supper, 80 cents; car fare, 20 cents	$2.75	
	21.	Breakfast, 80 cents; dinner, $1; supper, 75 cents; car fare, 20 cents	2.75	
	22.	Breakfast, 80 cents; dinner, 95 cents; supper, 80 cents; car fare, 20 cents	2.75	
	23.	Breakfast, 95 cents; dinner, $1; supper, 75 cents	2.70	
	24.	Breakfast, 85 cents; dinner, 95 cents; supper, 80 cents; car fare, 20 cents	2.80	
	25.	Breakfast, 90 cents; dinner, $1; supper, 75 cents; car fare, 20 cents	2.85	
	26.	Breakfast, 85 cents; dinner, $1	1.85	
		Room rent and fires, vou. 3	14.50	
		Railroad fare, New Orleans to Washington	27.50	
		Sleeper, New Orleans to Washington	7.00	
		Supper at Mobile	.75	
	27.	Breakfast on train, 80 cents; dinner on train, 85 cents	1.65	
		Supper at Charlotte, N. C	.75	
	28.	Necessary porterage, 25 cents; self and baggage to room, 75 cents	1.00	
	31.	Jurat	.25	
				$393.35
		J. Monroe Heiskell:		
		For services as examiner, Department of Justice, from December 1, 1888, to December 31, 1888, dates inclusive, 31 days, at $8 per day	248.00	
		For expenses actually and necessarily incurred, as per following statement:		
	16.	Breakfast, 90 cents; dinner, $1.10	2.00	
	17.	Breakfast, 85 cents; dinner, $1.15	2.00	
	18.	Breakfast, 75 cents; dinner, $1.25	2.00	
	19.	Breakfast, 75 cents; dinner, $1.25	2.00	
	20.	Breakfast, 75 cents; dinner, $1.25	2.00	
	21.	Breakfast, 85 cents	.85	
		Baggage and self to depot	1.50	
		Round trip ticket to Washington and return to New York	10.00	
		Dinner en route	1.00	
		Pullman car, New York to Baltimore	1.00	
		Room at Colonnade, vou. 1	7.50	
		Fires in room, vou. 2	3.25	
	27.	Breakfast	1.00	
		Pullman car, Baltimore to New York	1.00	
		Dinner en route	1.00	
		Baggage and self to quarters	1.50	
	28.	Breakfast, 75 cents; lunch, 50 cents; dinner, 90 cents	2.15	
	29.	Breakfast, 80 cents; lunch, 50 cents; dinner, $1	2.30	
	30.	Breakfast, 75 cents; lunch, 50 cents; dinner, $1	2.25	
	31.	Breakfast, 85 cents; lunch, 50 cents; dinner, 90 cents	2.25	
		Rent of room 41 W. Twenty-ninth street, from December 27 to Dec. 31, inclusive, $10 per week, vou. 3	7.15	
		Jurat to this account	.25	
		Street car fare from Dec. 16 to 31, inclusive of 22, 23, 24, 25, and 26	3.15	
				307,10
		James W. Nightingale:		
	31.	For services as examiner, Department of Justice, from Dec. 1, 1888 to Dec. 31, 1888, dates inclusive, 31 days, at $8 per day	248.00	
		For expenses actually and necessarily incurred, as per following statement:		
	4.	Baggage to depot, Washington, D. C	.25	
		Railroad fare from Washington, D. C., to Salt Lake City, Utah, on transportation order.		
		Sleeping-car, Washington, D. C,. to Chicago, Ill., Pennsylvania Railroad	5.00	
	5.	Breakfast, Altoona, Pa	.75	
		Dinner, Pittsburgh, Pa	.75	

1888.		James W. Nightingale—Continued.		
Dec.	5.	Supper, Alliance, Ohio	$0.75	
	6.	Necessary porterage, Dec. 4 and 5	.50	
		Breakfast, Chicago, Ill	1.00	
		Sleeping-car, Chicago to Omaha, Nebr., C. B. and Q. R. R.	2.50	
	6.	Dinner on train	.75	
		Supper on train	.75	
	7.	Necessary porterage	.25	
		Breakfast, Omaha, Nebr.	.75	
		Sleeping-car, Omaha, Nebr., to Salt Lake City, Utah	8.00	
		Dinner, Grand Island, Nebr	.75	
		Supper, North Platte, Nebr	.75	
	8.	Breakfast, Laramie, Wyo	.75	
		Dinner, Rawlins, Wyo	.75	
		Supper, Green River, Wyo	.75	
	9.	Necessary porterage, Dec. 7, 8, 9	.50	
		Baggage from depot, Salt Lake City, Utah	.50	
	13.	Memorandum book, official use, vou. 1	.75	
	28.	Legal cap paper, official use, vou. 2	.25	
	31.	Board and room from Dec. 9 to Dec. 31, 1888, inclusive, 23 days, at $2 per day, vou. 3	46.00	
		Jurat	.25	
				$322.00
		J. J. Wiggs:		
		For services as special examiner, Department of Justice, from Dec. 1, 1888, to Dec. 31, 1888, dates inclusive, 31 days, at $6 per day	186.00	
		For expenses actually and necessarily incurred as per following statement:		
	3.	Board at restaurant, Seattle, Wash., vou. 1	6.00	
		Room rent, vou. 2	4.00	
		Fare to Olympia, $1; lodging and meal on steamer, $1	2.00	
	7.	Hotel Carlton, Olympia, vou. 3	8.00	
		Porter to and from hotel to boat	.50	
		Fare and meal from Olympia to Seattle	1.50	
	11.	Board at restaurant at Seattle, vou. 4	3.45	
		Hotel room rent at Seattle, vou. 5	4.00	
		Railroad fare from Seattle to Portland	6.75	
		Two meals on cars	1.50	
		Supper at Portland	65	
		Baggage wagon	25	
	20.	Edmond Hotel, Portland, Ore., vou. 6	25.00	
		Hack to depot	50	
		One meal on car	75	
		Sleeper from Portland to San Francisco	5.00	
	21.	Three meals	2.25	
	22.	Hack to hotel at San Francisco	50	
		Two meals at restaurant	1.40	
	23.	Three meals at restaurant	1.75	
	24.	Three meals at restaurant	1.75	
	25.	Three meals at restaurant	1.75	
		Palace Hotel, San Francisco, vou. 7	6.00	
	26.	One meal on car	75	
		Hughes Hotel, Fresno, Cal	4.75	
	28.	Three meals	2.00	
		Hack to hotel, Los Angeles	50	
	29.	Three meals	2.00	
	30.	Three meals	2.00	
	31.	Three meals	2.00	
		Hotel, Los Angeles, Cal., vou. 9	4.00	
		Jurat	25	
				289.50
1889.		J. J. Wiggs:		
Jan.	9.	For services as special examiner, Department of Justice, from January 1, 1889, to January 9, 1889, dates inclusive, 9 days, at $6 per day	54.00	
		For expenses actually and necessarily incurred, as per following statement:		
	1.	For three meals	1.75	
	2.	For three meals	1.75	

1889.		J. J. Wiggs—Continued.		
Jan.	2.	Hack to depot at Los Angeles	$0.50	
		Hotel room rent, vou. 1	1.00	
		Sleeper to El Paso	5.50	
	3.	Three meals	2.25	
	4.	Three meals	2.25	
		Sleeper from El Paso to Little Rock	7.50	
	5.	Three meals	2.25	
	6.	Three meals	2.25	
	7.	Three meals	1.75	
	8.	Three meals	1.75	
		Jurat to this account	.25	
				$34.75
1888.		D. Ira Baker:		
Dec.	15.	For services as examiner, Department of Justice, from December 15, 1888, to December 31, dates inclusive, 15 days, at $8 per day	120.00	
		For expenses actually and necessarily incurred, as per following statement:		
	3.	Index map and guide, towns, etc., Virginia	.75	
		Self and luggage to hotel, Abingdon, Va	.50	
		Bill at Colonnade Hotel, Abingdon, Va., vou. 1	5.50	
		Self and luggage to railroad depot for Wytheville	.50	
		Railroad fare to Wytheville, $1.95; seat parlor car, 50 cents	2.45	
		Breakfast en route "Glade Springs"	.50	
		Bus from depot to Wytheville	.25	
		Telegram to United States Marshal Jordan, vou. 2	.22	
		Dinner at Wytheville	.50	
		To railroad depot for Dublin	.25	
		Railroad fare to Dublin for Newbern, and seat	1.25	
		Self and luggage, Dublin to Newbern	.50	
	7.	Bill at Newbern House, Newbern, vou. 3	6.50	
		To Dublin station from Newbern	.50	
		Railroad fare to Waynesborough Junction	5.15	
		Seat in parlor car to Waynesborough Junction	.75	
		Dinner en route, 85 cents; supper, 75 cents	1.60	
		Luggage to Hotel Roanoke, Roanoke	.25	
	8.	Bill at Hotel Roanoke, voucher 4	2.25	
		To depot en route to Waynesborough Junction	.25	
		12.30 night sleeper, Waynesborough Junction	2.00	
	9.	Breakfast, dinner, and supper at Waynesborough Junction Station, 50 cents each	1.50	
		Sunday no train till 11.30 night, railroad fare	.40	
		To hotel at Staunton, Va., to sleep	.25	
	10.	Bill at Virginia Hotel, Staunton, vou. 5	1.00	
		Self to Baltimore and Ohio Railroad and transfer luggage from Shenandoah Railroad	.75	
		Railroad fare Staunton to Harrisonburgh	.85	
		Self and luggage to hotel, Harrisonburgh	.50	
	15.	Bill at Hotel Wilton, Harrisonburgh, vou. 6	10.00	
		For services as examiner, Department of Justice, from Dec. 16, 1888, to Dec. 31, 1888, dates inclusive, 16 days, at $8 per day	128.00	
		For expenses actually and necessarily incurred, as per following statement:		
	16.	Paid porterage Hotel Wilton, Harrisonburgh	.35	
		Self and luggage to railroad depot for Woodstock	.50	
		Railroad fare to Woodstock, $1.25; seat in parlor car, 50 cents	1.75	
		Dinner en route to Woodstock	.50	
		Self and luggage to Shenandoah Hotel	.50	
	18.	Porterage at Shenandoah Hotel	.50	
		Bill at Shenandoah Hotel, vou. 7	6.00	
		To railroad depot for Washington	.50	
		Railroad fare, Woodstock to Washington	3.25	
		Dinner en route, Winchester, Va	.75	
		Self and luggage to hotel, Washington	.75	
		Affidavit to account	.25	
				311.27

1889.	Frank Strong:		
Jan. 31	For services as general agent, Department of Justice, from Jan. 1, 1889, to Jan. 31, 1889, dates inclusive, 31 days, at $10 per day	$310.00	
	Bill of Western Union Telegraph Company for December, 1888, vou. 1	8.07	
	Jurat	.25	
			$318.32
	D. Ira Baker:		
	For services as examiner, Department of Justice, from Jan. 1, 1889, to Jan. 31, 1889, dates inclusive, 31 days, at $8 per day		248.00
	David A. Fisher:		
	For services as examiner, Department of Justice, from Jan. 1, 1889, to Jan. 31, 1889, dates inclusive, 31 days, at $8 per day	248.00	
	For expenses actually and necessarily incurred, as per following statement:		
29.	Railroad fare, Washington, D. C., to Kansas City, Mo..	27.75	
	Sleeping-car fare, Washington, D. C., to Chicago, Ill ..	5.00	
30.	Sleeping-car fare, Chicago, Ill., to Kansas City	2.50	
	Dinner on buffet-car	.60	
	Supper on buffet-car	.75	
31.	Breakfast on buffet-car	.75	
	Necessary porterage, Kansas City, Mo	.25	
	Transferring baggage, depot to hotel, Kansas City	.25	
	Jurat	.25	
			286.10
	J. Monroe Heiskell:		
31.	For services as examiner, Department of Justice, from Jan. 1, 1889, to Jan. 31, 1889, dates inclusive, 31 days, at $8 per day	248.00	
	For expenses actually and necessarily incurred, as per following statement:		
	Room-rent from Jan. 1 to 31, inclusive, as per vou. 1	44.95	
	Meals from Jan. 1 to 31, inclusive, as per vou. 2	86.80	
	Street-car fare from Jan. 1 to 31, inclusive	7.35	
	Jurat to this account	.25	
		387.35	
	By disallowance of overcharge in hotel bill	7.75	
			379.60
	Leigh Chalmers:		
	For services as examiner, Department of Justice, from Jan. 1, 1888, to Jan. 31, 1889, dates inclusive, 31 days, at $8 per day	248.00	
	For expenses actually and necessarily incurred, as per following statement:		
27.	Self and baggage from room to depot	.85	
	Railroad fare from Washington, D. C., to Galveston, Tex.	39.50	
	Sleeper fare from Washington, D. C., to New Orleans..	7.00	
	Dinner, 75 cents; supper, 75 cents	1.50	
28.	Breakfast, 75 cents; dinner, 75 cents; supper, 75 cents; porterage at New Orleans, 25 cents	2.50	
	Sleeper from New Orleans to Galveston, Tex.	2.50	
30.	Breakfast, 75 cents; dinner, $1; supper, 75 cents	2.50	
	Self and baggage to room	.75	
31.	Breakfast, 75 cents; dinner, 85 cents; supper, 75 cents.	2.35	
	Room-rent, vou. 1	1.50	
			311.30
	Thomas B. Hardin:		
31.	For services as examiner, Department of Justice, from Jan. 1, 1889, to Jan. 31, 1889, 31 days, at $6 per day	186.00	
	For expenses actually and necessarily incurred, as per following statement:		
26.	Transportation, self and baggage, residence to depot	.85	
	Railroad fare, Washington to St. Paul, Minn	29.00	
	Sleeping-car, Washington to Chicago, Ill	5.00	

1889.		Thomas B. Hardin—Continued.		
Jan.	26.	Supper on train, buffet-car	$0.60	
	27.	Breakfast at Pittsburgh, Pa	.75	
		Necessary porterage	.10	
	29.	Dinner at Crestline, Ohio	.75	
		Supper on car, buffet-car	1.05	
		Necessary porterage	.20	
		Sleeping-car fare, Chicago to St. Paul	2.00	
	30.	Breakfast on dining-car en route	.75	
		Dinner on dining-car en route	.75	
		Necessary porterage	.30	
		Sleeping-car fare, St. Paul to Tacoma, Wash	13.50	
		Railway travel to Tacoma made on Order of Transportation No. 316.		
		Supper on dining-car en route to Tacoma	.75	
	31.	Breakfast on dining-car	.75	
		Dinner on dining-car	.75	
		Supper on dining-car	.75	
		Jurat to this account	.25	
				$244.85
		James W. Nightingale:		
	31.	For services as examiner, Department of Justice, from Jan. 1, 1889, to Jan. 31, 1889, dates inclusive, 31 days, at $8 per day	248.00	
		For expenses actually and necessarily incurred, as per following statement:		
	5.	Railroad fare, Salt Lake City to Ogden, Utah	1.50	
		Omnibus to depot	.25	
		Railroad fare, Ogden to Salt Lake City	1.50	
	9.	Legal cap paper (official use), voucher 1	.25	
	15.	Conveyance to depot, Salt Lake City, Utah	.25	
		Railroad fare, Salt Lake City to Ogden	1.50	
		Conveyance, depot to hotel	.25	
	17.	Board, Brown House, Ogden, Utah, voucher 2	6.25	
		Conveyance, hotel to depot	.25	
		Railroad fare, Ogden to Salt Lake City	1.50	
	21.	Conveyance, depot to marshal's office, Salt Lake City	.25	
		Conveyance to depot, Salt Lake City	.25	
		Railroad fare, Salt Lake City to Provo, Utah	2.00	
		Conveyance, depot to U. S. clerk's office, Provo, Utah	.25	
		Dinner, Provo, Utah	.75	
		Conveyance to depot, Provo	.25	
		Railroad fare, Provo to Salt Lake City, Utah	2.00	
		Seat in Pullman car, Provo to Salt Lake City	.25	
		Conveyance from depot, Salt Lake City	.25	
	31.	Board, Salt Lake City, 29 days, voucher 3	58.00	
		Street-car fare, Salt Lake City, Utah, month of Jan	.70	
		Jurat	.25	
				326.70
		James W. Nightingale:		
Feb.	28.	For services as examiner, Department of Justice, from Feb. 1, 1889, to Feb. 28, 1889, dates inclusive, 28 days, at $8 per day	224.00	
		For expenses actually and necessarily incurred, as per following statement:		
	2.	Board, Salt Lake City, 2 days, voucher 1	4.00	
		Self and baggage to depot, Salt Lake City, Utah	.50	
		Railroad fare, Salt Lake City to Ogden	1.50	
		Sleeping-car, Salt Lake City to Reno, Nev	4.75	
		Railroad fare, Ogden, Utah, to Reno, Nev., on transportation order No. 297, Central Pacific R. R.		
	3.	Breakfast, Wells, Nev	.75	
		Dinner, Battle Mountain, Nev	.75	
		Supper, Humboldt, Nev	.75	
		Sleeping-car porterage	.25	
	4.	Lodging and breakfast, Reno, Nev., voucher 2	1.50	
		Railroad fare, Reno to Carson City, Nev	2.00	
	7.	Board, International Hotel, Virginia City, Nev., 3 days, voucher 3	10.00	
		Railroad fare, Virginia City to Reno, Nev	3.00	

1889.		James W. Nightingale—Continued.		
Feb.	8.	Board, Depot Hotel, Reno, Nev., vou. 4	$2.00	
		Railroad fare, Reno, Nev., to Ogden, Utah, on transportation order No. 298, Central Pacific R. R.		
	4.	Dinner, Carson City, Nev	.75	
		Railroad fare, Carson City to Virginia City, Nev	1.50	
	8.	Sleeping-car, Reno, Nev., to Salt Lake City	4.75	
		Dinner, Humboldt, Nev	.75	
		Supper, Elks	.75	
	9.	Sleeping-car porterage	.25	
		Breakfast, Ogden, Utah	.75	
		Railroad fare to Salt Lake City, Utah	1.50	
		Conveyance from depot, Salt Lake City	.25	
	12.	Railroad fare, Salt Lake City to Provo, Utah, and return	3.50	
		Dinner, Provo, Utah	.75	
	15.	Board, Salt Lake City, Utah, 7 days, voucher 5	14.00	
		Self and baggage to depot, Salt Lake City	.50	
		Railroad fare, Salt Lake City to Ogden, Utah	1.50	
		Sleeping-car to Omaha, Nebr	8.00	
		Railroad fare, Ogden, Utah, to Omaha, Nebr., transportation order No. 299, Union Pacific R. R.		
	16.	Breakfast, Ogden, Utah	.75	
		Dinner, Evanston, Wyo	.75	
		Supper, Green River, Wyo	.75	
	17.	Breakfast, Laramie, Wyo	.75	
		Dinner, Sydney, Nebr	.75	
		Supper, North Platte, Nebr	.75	
	18.	Sleeping-car porterage, 16th and 17th	.50	
		Breakfast 75 cents, dinner 75 cents, Omaha	1.50	
		Omnibus to depot, Omaha	.25	
		Railroad fare, Omaha, Nebr., to Chicago, Ill	12.60	
		Sleeping-car, Omaha, Nebr., to Chicago, Ill	2.50	
		Supper on train, C. B. & Q. R. R	.75	
	19.	Sleeping-car porterage	.25	
		Breakfast $1, dinner 85 cents, Chicago, Ill	1.85	
		Conveyance to depot	.50	
		Railroad fare, Chicago to Washington, D. C	17.50	
		Sleeping-car, Chicago to Washington, D. C	5.00	
	20.	Supper on train	1.00	
		Breakfast $1, dinner $1, supper 85 cents on train	2.85	
		Sleeping-car porterage	.25	
		Self and baggage from depot, Washington, D. C	.50	
		Jurat	.25	
				$347.80
		Frank Strong:		
	28.	For services as general agent, Department of Justice, from Feb. 1, 1889, to Feb. 28, 1889, dates inclusive, 28 days, at $10 per day	280.00	
		For expenses actually and necessarily incurred as per following statement:		
		Bill of Western Union Telegraph Co., Jan., 1889, vou. 1.	1.57	
		Bill of Postal Telegraph Co., Dec., 1888, vou. 2	.25	
		Jurat	.25	
				282.07
		J. Monroe Heiskell:		
		For services as examiner, Department of Justice, from Feb. 1, 1889, to Feb. 28, 1889, dates inclusive, 28 days, at $8 per day	224.00	
		For expenses actually and necessarily incurred as per following statement:		
	28.	Room rent as per vou. 1	40.60	
		Meals as per vou. 2	71.40	
		Street-car fare, Feb. 1st to 28th inst	5.60	
		Jurat to this account	.25	
				341.85
		D. Ira Baker:		
		For services as examiner, Department of Justice, from the 1st day of Feb., 1889, to the 28th day of Feb., 1889, dates inclusive, 28 days, at $8 per day	224.00	
	7.	Self and luggage to railroad depot for Jacksonville, Fla.	.50	

1889.		D. Ira Baker—Continued.	
Feb.	7.	Railroad fare for Jacksonville from Washington	$22.75
		Sleeper for Jacksonville from Washington	5.50
		Dinner en route, buffet car	1.10
		Supper, en route, buffet car	1.00
	8.	Breakfast, en route, buffet car	1.00
		Dinner, en route, buffet car	1.00
		Porterage on car, 25 cents, self and luggage to hotel at Jacksonville, Fla., $1	1.25
		Diary note book and railroad guide	1.25
		Street-car fare, 10 cents; 13th, 15 cents; 15th, 20 cents	.45
	14.	To railroad depot for Ocala, U. S. commissioner ex'm	.25
		Railroad fare, Jacksonville to Ocala	3.00
		Seat parlor-car, $1; dinner at Ocala, $1	2.00
		Supper en route Ocala to Jacksonville	1.00
		Railroad fare, Ocala to Jacksonville	3.00
		Seat parlor-car, Ocala to Jacksonville	1.00
		To hotel at Jacksonville, midnight, 1 a. m	.75
	20.	Bill at St. James Hotel, Jacksonville, 12 days, Feb. 8th to 20th, vou. 1	48.00
		Railroad depot for Pensacola, self and luggage	.75
		Railroad fare to Pensacola, $12; seat parlor-car, $1.25	13.25
		Dinner, en route, $1; supper, $1, buffet car	2.00
		Midnight Pensacola to hotel at Pensacola	1.00
		Street-car fare, Pensacola, 20 cents; 25th, street car-fare, 15 cents	.35
	22.	Bill at Continental Hotel, Pensacola, vou. 2	8.00
		Porterage at hotel, 50 cents, self and luggage to railroad depot, 50 cents	1.00
		Railroad fare from Pensacola to Tallahassee	6.63
		Sleeper from Pensacola to Tallahassee	2.00
	23.	Porterage on sleeper, 25 cents; breakfast buffet car, 75 cents	1.00
		Self and luggage to Leon Hotel, Tallahassee	.50
	25.	Bill at Leon Hotel, vou. 3	5.50
		Porterage at Leon Hotel	.25
		Railroad fare, Tallahassee to Jacksonville	6.00
		Seat parlor-car, $1.25; dinner buffet car, $1	2.25
		Porterage parlor-car, 25 cents; to hotel Jacksonville, 50 cents	.75
		Affidavit to account	.25
			$370.28

Leigh Chalmers:

	For services as examiner, Department of Justice, from the 1st day of Feb., 1889, to the 28th day of Feb. 1889, 28 days, at $8 per day	224.00
	For expenses actually and necessarily incurred, as per following statement:	
1.	Diary	.50
	Breakfast, 80 cents; dinner, 90 cents; supper, 80 cents; car fare, 10 cents	2.60
2.	Breakfast, 80 cents; dinner, 90 cents; supper, 75 cents; street car, 10 cents	2.55
3.	Breakfast, 80 cents; dinner, 90 cents; supper, 75 cents.	2.45
4.	Breakfast, 90 cents; dinner, 95 cents; supper 75 cents.	2.60
5.	Breakfast, 80 cents; dinner, 95 cents; supper 75 cents; street car, 10 cents	2.55
6.	Breakfast, 75 cents; dinner, 95 cents; supper, 80 cents.	2.50
7.	Breakfast, 80 cents; dinner, 90 cents; supper, 75 cents; street car, 10 cents	2.55
8.	Breakfast, 80 cents; dinner, 90 cents; supper, 75 cents; street car, 10 cents	2.55
	Room rent, 8 days, vou. 1	4.00
	Railroad fare, Galveston to Jefferson, Tex	9.65
	Sleeper, Galveston to Jefferson, Tex	2.50
	Self and baggage from room to depot	.75
9.	Breakfast, 75 cents; porterage, 25 cents; self and baggage from depot to hotel, 75 cents	1.75
12.	Hotel bill at Jefferson, vou. 2	7.50
	Self and baggage from hotel to depot	.75

1889.		Leigh Chalmers—Continued.	
Feb.	12.	Railroad fare from Jefferson, Tex., to Shreveport, La	$1.95
		Sleeper fare from Jefferson, Tex., to Marshall, Tex	.50
		Hotel bill at Marshall, Tex., vou 3	1.75
		Bus to and from hotel	.50
		Self and baggage from depot to hotel, Shreveport	.75
	14.	Hotel bill at Shreveport, vou. 4	6.00
		Railroad fare from Shreveport to New Orleans, La	11.50
		Sleeper from Shreveport to New Orleans, La	2.00
		Self and baggage from hotel to depot	.75
		Breakfast, 75 cents; dinner, 75 cents; supper, 75 cents	2.25
		Self and baggage from depot to room, New Orleans	1.00
	15.	Breakfast, 65 cents; dinner, $1; supper, 95 cents; car fare, 20 cents	2.80
	16.	Breakfast, 95 cents; dinner, $1; supper, 85 cents; car fare, 25 cents	3.05
	17.	Breakfast, 90 cents; dinner, $1; supper, 85 cents; car fare, 20 cents	2.95
	18.	Breakfast, 95 cents; dinner, $1; supper, 85 cents; car fare, 20 cents	3.00
	19.	Breakfast, 90 cents; dinner, 95 cents; supper, 85 cents; car fare, 25 cents	2.95
	20.	Breakfast, 90 cents; dinner, $1; supper, 80 cents; car fare, 20 cents	2.90
	21.	Breakfast, 95 cents; dinner 95 cents; supper, 85 cents; car fare, 20 cents	2.95
	22.	Breakfast, 95 cents; dinner, 90 cents; supper, 85 cents; car fare, 20 cents	2.90
	23.	Breakfast, 95 cents; dinner, 95 cents; supper, 85 cents; car fare, 20 cents	2.95
	24.	Breakfast, 90 cents; dinner, $1; supper, 85 cents	2.75
	25.	Breakfast, 95 cents; dinner, 95 cents; supper, 80 cents; car fare, 30 cents	3.00
	26.	Breakfast, 95 cents; dinner, $1; supper, 85 cents; car fare, 15 cents	2.95
	27.	Breakfast, 90 cents; dinner, $1; supper, 85 cents; car fare, 20 cents	2.95
	28.	Breakfast, 95 cents; dinner, 95 cents; supper, 80 cents; car fare, 10 cents	2.80
		Room rent and fires, vou. 5	17.90
		Railroad fare from New Orleans to Washington, D. C	27.50
		Sleeper from New Orleans to Washington, D. C	7.00
		Jurat	.25
			$394.25
		Thomas B. Hardin:	
		For services as examiner, Department of Justice, from the 1st day of Feb., 1889, to the 26th day of Feb., 1889, dates inclusive, 26 days, at $6 per day	156.00
		For expenses actually and necessarily incurred, as per following statement:	
	1.	Breakfast in dining-car en route Washington, D. C., to Seattle, Wash	.75
		Dinner and supper, at 75 cents each	1.50
	2.	Breakfast, dinner, and supper as above	2.25
	3.	Necessary porterage	.60
		Bus fare, depot to hotel at Tacoma (while waiting for boat for Seattle, it being Sunday)	.25
		Breakfast at Tacoma	1.00
		Bus fare, hotel to steamer wharves, Tacoma	.25
		Steamer fare, Tacoma to Seattle, Wash	.50
		Bus fare, wharf to hotel at Seattle, Wash	.25
		Board and lodging at Seattle, per vou. 1	2.25
	4.	Breakfast	.50
		Lunch	.75
		Dinner	.50
	5.	Breakfast and lunch	1.00
	6.	Breakfast	.50
		Lunch	.75
		Dinner	.40
	7.	Breakfast	.50

1889.		Thomas B. Hardin—Continued.	
Feb.	7.	Lunch	$0.40
	8.	Breakfast	.50
		Lunch	.20
		Dinner	.50
	9.	Breakfast	.50
		Lunch	.20
		Dinner	.50
	10.	Breakfast	.75
		Lunch	.20
		Dinner	.50
	11.	Breakfast	.50
		Lodging in Seattle, as per vou. 2	8.00
		Lunch	.20
		Dinner	.50
	12.	Breakfast	.50
		Lunch	.50
		Dinner	.50
		Transportation of self and baggage from lodging-house to steamer wharf	.50
		Steamer fare, Seattle to Tacoma, Wash	.50
		Transportation, self and baggage, from wharf to hotel at Tacoma	.25
	13.	Hotel bill at Tacoma, vou. 3	2.75
		Bus fare, hotel to boat	.25
		Steamer fare, Tacoma to Olympia, Wash	.50
		Lunch at Olympia	.15
	14.	Hotel bill at Olympia, vou. 4	3.00
		Lunch after leaving hotel and before going aboard steamer	.25
		Steam-boat fare, Olympia to Tacoma	.50
		State-room on board steamer, vou. 5 (steamer leaving very early in the morning, spent the night on board)	1.50
	15.	Bus fare, steamer to hotel at Tacoma	.25
		Hotel bill at Tacoma, vou. 6	2.75
		Hack hire, hotel to train at Tacoma	.50
		Transportation, Tacoma to Portland, Oregon, en route to Vancouver, Wash., furnished by Union Pacific R. R. on order of transportation No. 317:	
		Sleeping-car fare, Tacoma to Portland	2.00
	16.	Cab fare, depot to hotel at Portland (waiting on train)	.50
		Necessary porterage	.25
		Breakfast at Portland, Oregon	.75
		Railroad fare, round trip, Portland to Vancouver	.50
		Dinner at Vancouver	.75
		Supper at Portland, en route Vancouver to Walla Walla, Wash	.75
		Hack fare, hotel to depot	1.00
		Railroad fare, Portland to Walla Walla	10.15
		Sleeping-car, Portland to Walla Walla	2.50
	17.	Necessary porterage	.25
		Breakfast at Walla Walla	.60
	18.	Hotel bill at Walla Walla, vou. 7	3.00
		Railroad fare, Walla Walla to Wallula Junction	1.55
		Supper at Wallula Junction	.50
		Transportation from Wallula Junction to Spokane Falls, furnished by Union Pacific R. R., order No. 319:	
	18.	Sleeping-car fare, Wallula Junction to Spokane Falls, Washington	2.00
	21.	Hotel bill at Spokane Falls, vou. 8	8.00
		Transportaton, Spokane Falls to Tacoma, Washington, furnished by Union Pacific Railroad on the order of transportation No. 319.	
		Sleeping-car fare, Spokane to Pasco Junction	.75
		Dinner in dining-car en route	.75
		Sleeping-car fare, Pasco Junction to Tacoma	2.00
	22.	Necessary porterage	.25
		Steamer fare, Tacoma to Seattle, Washington	.50
		Breakfast on steamer en route	.50
		Dinner at Seattle, Washington	.50

1889.		Thomas B. Hardin—Continued.		
Feb.	22.	Transportation of baggage, steamer to lodging house..	$0.25	
		Supper at Seattle	.50	
	23.	Breakfast, lunch, and dinner at Seattle	1.30	
	24.	Breakfast, lunch, and dinner at Seattle	1.70	
	25.	Breakfast, lunch, and dinner at Seattle	1.75	
		Lodging at Seattle, vou. 9	3.00	
		Jurat to account	.25	
				$248.15
		David A. Fisher:		
	28.	For services as examiner, Department of Justice, from Feb. 1, 1889, to Feb. 28, 1889, dates inclusive, 28 days, at $8	224.00	
		For expenses actually and necessarily incurred, as per following statement:		
	21.	Hotel, Kansas City, Mo., vou. 1	63.75	
		Transferring baggage, Kansas City, hotel to depot	.25	
		Sleeping-car fare, Kansas City to Omaha	2.00	
	22.	Transfer of self and baggage, Union depot to depot of Fremont, Elkhorn, and Missouri Valley Railroad, Omaha, Nebr	.50	
		Breakfast at Omaha, Nebr	.50	
		Necessary porterage	.25	
		Sleeping-car fare, Fremont, Nebr., to Whitewood, Dak..	4.00	
		Dinner at Norfolk Junction, Nebr	.50	
		Supper at Long Pine, Nebr	.50	
	23.	Breakfast at Rapid City, Dak	.50	
		Necessary porterage at Whitewood, Dak	.25	
		Transfer of baggage, Whitewood to Deadwood, Dak...	.50	
	28.	Hotel, Deadwood, Dak., vou. 2	10.00	
		Jurat to account	.25	
				307.75
		Frank Strong:		
Mar.	31.	For services as general agent, Department of Justice, from Mar. 1, 1889, to Mar. 31, 1889, 31 days, at $10 per day	310.00	
		For expenses actually and necessarily incurred, as per following statement:		
		Bill of W. U. Telegraph Co., for Feb., 1889, vou	11.28	
		Paid expenses Howard Perry, examination, Baltimore, Md., vou	3.45	
		Jurat	.25	
		Copy Railroad Guide for official use	.50	
				325.48
		James W. Nightingale:		
		For services as examiner, Department of Justice, from Mar. 1 1889, to Mar. 31, 1889, dates inclusive, 31 days, at $8 per day	248.00	
		For expenses actually and necessarily incurred, as per following statement:		
	14.	Conveyance to railroad depot, Washington, D. C	.25	
		Railroad fare, Washington, D. C., to New York City	6.50	
		Sleeping-car, Washington, D. C., to New York	2.00	
	15.	Sleeping-car porterage	.25	
		Conveyance from Cortland-street ferry, New York	.50	
		Breakfast, 70 cents; dinner, $1; supper, $1	2.70	
	16.	Breakfast, 80 cents; dinner, $1; supper, 70 cents	2.55	
	17.	Breakfast, 95 cents; dinner, 85 cents; supper, 95 cents.	2.70	
		Room rent, New York City, vou. 1 and 2	4.00	
		Railroad fare, New York City to Washington, D. C	6.50	
		Sleeping-car, New York City to Washington, D. C	2.00	
	18.	Breakfast on train	.55	
		Sleeping-car porterage	.25	
		Street-car and elevated railroad fare, New York City, March 15, 16, 17	.35	
		Jurat	.25	
				279.35
		J. Monroe Heiskell:		
	31.	For services as examiner, Department of Justice, from March 1, 1889, to March 31, 1889, dates inclusive, 31 days, at $8 per day	248.00	

1889.		J. Monroe Heiskell—Continued.		
Mar.	31.	For expenses actually and necessarily incurred, as per following statement:		
	1.	Breakfast, 85 cents; dinner, $1; supper, 70 cents	$2.55	
	2.	Breakfast, 85 cents; dinner, $1.10; supper, 60 cents	2.55	
	3.	Breakfast, 80 cents; dinner, $1.15; supper, 75 cents	2.70	
	4.	Breakfast, 75 cents; dinner, $1; supper, 60 cents	2.35	
	5.	Breakfast, 75 cents; dinner, $1.20; supper, 60 cents	2.55	
	6.	Breakfast, 75 cents; dinner, $1.20; supper, 60 cents	2.55	
	7.	Breakfast, 75 cents; dinner, $1.10; supper, 70 cents	2.50	
		Room-rent (1 week), vou. 1	10.00	
		Baggage and self to depot, New York	2.00	
		Railroad fare, New York to Washington, D. C	6.50	
		Pullman sleeper, New York to Washington, D. C	2.00	
	8.	Porterage	.25	
		Baggage and self to residence, Baltimore	1.50	
		Street-car fare, New York	1.75	
		Jurat to account	.25	
Jan.	22.	Telegram omitted in former account, vou. 2	.35	
				$290.40
		David A. Fisher:		
Mar.	31.	For services as examiner, Department of Justice, from Mar. 1, 1889, to Mar. 31, 1889, dates inclusive, 31 days, at $8 per day	248.00	
		For expenses actually and necessarily incurred, as per following statement:		
	25.	Hotel, Deadwood, Dak., vou. 1	46.00	
		Transferring baggage, Deadwood to Whitewood, Dak.	1.00	
		Dinner at Whitewood, Dak	.50	
		Sleeping-car fare, Whitewood, Dak., to Missouri Valley, Iowa	4.00	
		Supper at Chadron, Neb	.50	
	26.	Dinner at Norfolk, Neb	.50	
		Necessary porterage, Missouri Valley, Iowa	.25	
		Sleeping-car fare, Missouri Valley to Chicago, Ill	2.50	
		Supper in dining-car	.75	
	27.	Breakfast in dining-car	.75	
		Porterage (necessary), Chicago, Ill	.25	
		Transfer self and baggage from Northwestern to Pennsylvania Railroad depot, Chicago, Ill	.50	
		Dinner at Chicago, Ill	.75	
		Railroad fare, Chicago, Ill., to Washington, D. C	17.75	
		Sleeping-car fare, Chicago, Ill., to Washington, D. C	5.00	
		Supper in buffet car	.70	
	28.	Breakfast at Pittsburgh, Pa	.75	
		Dinner at Harrisburg, Pa	.75	
		Necessary porterage, Washington, D. C	.25	
		Transfer baggage, depot to hotel, Washington, D. C	.25	
		Bus fare, depot to hotel, Washington, D. C	.25	
		Jurat to account	.25	
		Ira Baker:		
	31.	For services as examiner, Department of Justice, from March 1, 1889, to March 31, 1889, dates inclusive, 31 days, at $8 per day	248.00	
		For expenses actually and necessarily incurred as per following statement:		
	7.	Bus fare to depot for St. Augustine, Fla	.25	
		Railroad fare, Jacksonville to St. Augustine, Fla	1.50	
		Seat in parlor car, 50 cents; to hotel, St. Augustine, 25 cents	.75	
		Dinner at St. Augustine	1.00	
		Bus fare to depot for Jacksonville	.25	
		Railroad fare to Jacksonville from St. Augustine	1.50	
		Seat in cars, 50 cents; bus to hotel, Jacksonville, 25 cents	.75	
	9.	Street-car fare, Jacksonville, 20 cents; and 11th, 15 cents	.35	
	12.	Street-car fare and ferriage to South Jacksonville	.30	
	13.	Street-car fare to Brooklyn, etc., suburbs	.20	
	15–16.	Street-car fare, Jacksonville, 20 cents each day	.40	

1889.	Ira Baker—Continued.		
Mar. 17.	Bill at St. James Hotel, Jacksonville, 3 weeks and 1 day, 22 days, at $4 per day, vou. 1	$88.00	
	Fires at St. James Hotel	2.50	
	Bus to railroad depot, Jacksonville, and porterage	.75	
	Fare to Enterprise	4.00	
	Bill at "Brock House," Enterprise, vou. 2	5.00	
	To railroad depot, 25 cents; porterage hotel, 25 cents	.50	
	Railroad fare to Jacksonville, $3.75; seat in car, $1	4.75	
	Railroad fare, Jacksonville to Washington, D. C	22.75	
	Sleeper Jacksonville to Washington, D. C	12.50	
	[NOTE.—Was compelled to either wait at hotel at Jacksonville for 3 or 4 days at a much larger expense, or come on this vestibule train, for the reason that no berth could be had in sleeper, all engaged days ahead.]		
	Porterage on train to Washington	.50	
	Dinner en route, buffet	1.00	
	Supper en route, buffet	1.00	
19.	Breakfast en route	1.00	
	Bus to hotel, self and luggage, Washington	.50	
	Affidavit to account	.25	
			$400.25
	Leigh Chalmers:		
31.	For services as examiner, Department of Justice, from March 1, 1889, to March 31, 1889, dates inclusive, 31 days, at $8 per day	248.00	
	For expenses actually and necessarily incurred as per following statement:		
1.	Room rent at New Orleans, vou. 1	1.00	
	Breakfast, 90 cents; dinner, $1; supper, 75 cents	2.65	
	Self and baggage from room to depot at New Orleans	1.00	
2.	Breakfast on train, 85 cents; dinner, 75 cents; supper, 75 cents	2.35	
3.	Porter on sleeper, 25 cents; self and baggage depot to room, 75 cents	1.00	
26.	Self and baggage from room to depot	.50	
	Railroad from Washington to Trenton, N. J	4.80	
	Self and baggage, depot to hotel, Trenton, N. J	.50	
31.	Hotel bill at Trenton, N. J., vou. 2	16.50	
	Jurat	.25	
			278.55
	Frank B. Crostwaite:		
	For services as examiner from March 1, 1889, to March 31, 1889, dates inclusive, 31 days, at $6 per day	186.00	
	For expenses actually and necessarily incurred as per following statement:		
	31 days' lodging, at Seattle, Wash, vou. 1	31.00	
	Meals at Seattle—		
1.	Breakfast, —; dinner, 50 cents; supper, 50 cents	1.00	
2.	Breakfast, 50 cents; dinner, 25 cents; supper, 50 cents.	1.25	
3.	Breakfast, 50 cents; dinner, 50 cents; supper, 35 cents.	1.35	
4.	Breakfast, 35 cents; dinner, 40 cents; supper, 50 cents.	1.25	
5.	Breakfast, 45 cents; dinner, 30 cents; supper, 50 cents.	1.25	
6.	Breakfast, 40 cents; dinner, 30 cents; supper, 50 cents.	1.20	
7.	Breakfast, 35 cents; dinner, 50 cents; supper, 35 cents.	1.20	
8.	Breakfast, 60 cents; dinner, 20 cents; supper, 50 cents.	1.30	
9.	Breakfast, 60 cents; dinner, 30 cents; supper, 50 cents.	1.40	
10.	Breakfast, 50 cents; dinner, 30 cents; supper, 40 cents.	1.20	
11.	Fare to Tacoma and return	1.00	
11.	Breakfast, 35 cents; lunch, 40 cents; dinner at Tacoma, $1	1.75	
12.	Breakfast, 35 cents; dinner, 25 cents; supper, 50 cents.	1.10	
13.	Breakfast, 75 cents; dinner, 40 cents; supper, 50 cents.	1.65	
14.	Breakfast, 75 cents; dinner, 40 cents; supper, 50 cents.	1.65	
15.	Breakfast, 75 cents; dinner, 40 cents; supper, 50 cents.	1.65	
16.	Breakfast, 45 cents; dinner, 25 cents; supper, 60 cents.	1.30	
17.	Breakfast, 60 cents; dinner, 25 cents; supper, 50 cents.	1.35	
18.	Breakfast, 60 cents; dinner, 40 cents; supper, 50 cents.	1.50	
19.	Breakfast, 60 cents; dinner, 25 cents; supper, 50 cents.	1.35	
20.	Breakfast, 60 cents; dinner, 35 cents; supper, 50 cents.	1.45	

Frank B. Crostwaite—Continued.

1889.		Meals at Seattle—		
Mar.	21.	Breakfast, 50 cents; dinner, 40 cents; supper, 50 cents.	$1.40	
	22.	Breakfast, 60 cents; dinner, 50 cents; supper, 50 cents.	1.60	
	23.	Breakfast, 75 cents; dinner, 30 cents; supper, 50 cents.	1.55	
	24.	Breakfast, 75 cents; dinner, 40 cents; supper, 50 cents.	1.65	
	25.	Breakfast, 60 cents; dinner, 40 cents; supper, 50 cents.	1.50	
	26.	Breakfast, 70 cents; dinner, 30 cents; supper, 50 cents.	1.50	
	27.	Breakfast, 60 cents; dinner, 40 cents; supper, 50 cents.	1.50	
	28.	Breakfast, 70 cents; dinner, 30 cents; supper, 50 cents.	1.50	
	29.	Breakfast, 70 cents; dinner, 30 cents; supper, 45 cents.	1.45	
	30.	Breakfast, 70 cents; dinner, 30 cents; supper, 45 cents.	1.45	
	31.	Breakfast, 60 cents; dinner, 30 cents; supper, 50 cents.	1.40	
		Jurat to account	.25	
				$261.90

David A. Fisher:

Apr.	15.	For services as examiner, Department of Justice, from April 1, 1889, to April 15, 1889, dates inclusive, 15 days, at $8 per day		120.00

Frank Strong:

	30.	For services as general agent, Department of Justice, from April 1, 1889, to April 30, 1889, dates inclusive, 30 days, at $10 per day	300.00	
		For expenses actually and necessarily incurred as per following statement:		
		Bill of W. U. Telegraph Company for March, 1889, vou. 1	13.75	
	19.	Carriage to jail, District of Columbia, and return, order Attorney-General, vou. 2	6.00	
	20.	Carriage to jail, District of Columbia, and return, order Attorney-General	3.50	
		Jurat	25	
				323.50

Leigh Chalmers:

	20.	For services as examiner, Department of Justice, from April 1, 1889, to April 30, 1889, dates inclusive, 30 days, at $8 per day	240.00	
		For expenses actually and necessarily incurred as per following statement:		
	6.	Hotel bill at Trenton, N. J., vou. 1	18.40	
		Hack for self, hotel to depot	50	
		Railroad fare from Trenton, N. J., to New York	1.70	
		Self and baggage from depot to room	1.00	
		Supper	.75	
	7.	Breakfast, 90 cents; dinner, $1; supper, 85 cents	2.75	
	8.	Breakfast, 90 cents; dinner, $1; supper, 95 cents	2.85	
	9.	Room rent, vou. 2	3.00	
		Breakfast, 95 cents; dinner, $1; supper, 85 cents; car-fare, 25 cents	3.05	
	10.	Breakfast, 90 cents; dinner, 95 cents; supper, 85 cents; car-fare, 25 cents	2.95	
	11.	Breakfast, 95 cents; dinner, $1; supper, 85 cents; car-fare, 25 cents	3.05	
	12.	Breakfast, 90 cents; dinner, $1; supper, 80 cents; car-fare, 25 cents	2.95	
	13.	Breakfast, 95 cents; dinner, 95 cents; supper, 90 cents; car-fare, 20 cents	3.00	
		Railroad fare from New York to Newark and return	.25	
	14.	Breakfast, 90 cents; dinner, $1; supper, 85 cents; car-fare, 20 cents	2.95	
	15.	Breakfast, 95 cents; dinner, 95 cents; supper, 85 cents; car-fare, 20 cents	2.95	
		Railroad fare from New York to Washington	6.50	
		Self and baggage from depot to room	1.00	
		Jurat	.25	
		Room rent, vou. 3	6.00	
				306.10

James W. Nightingale:

	30.	For services as examiner, Department of Justice, from April 1, 1889, to April 30, 1889, dates inclusive, 30 days, at $8 per day	240.00	

James W. Nightingale—Continued.

For expenses actually and necessarily incurred, as per following statement:

1889.			
Apr.	16.	Self and baggage to depot, Washington, D. C	$0.75
		Railroad fare, Washington, D. C., to Philadelphia, Pa	4.00
		Seat in Pullman car, Washington, D. C., to Philadelphia, Pa	.75
		Breakfast on train	1.00
		Self and baggage, from depot to Philadelphia, Pa	.55
		Dinner, Philadelphia, Pa	.85
		Supper, Philadelphia, Pa	.95
	17.	Breakfast, 85 cents; dinner, 80 cents; supper, $1	2.65
	18.	Breakfast, 95 cents; dinner, 75 cents; supper, 95 cents	2.65
	19.	Breakfast, $1; dinner, 75 cents; supper, 95 cents	2.70
	20.	Breakfast, 80 cents; dinner, 65 cents; supper, $1	2.45
	21.	Breakfast, 70 cents; dinner, $1; supper, $1	2.70
	22.	Breakfast, 85 cents; dinner, 90 cents; supper, 95 cents	2.70
	23.	Breakfast, 55 cents; dinner, 80 cents; supper, $1	2.35
	24.	Breakfast, 70 cents; dinner, 80 cents; supper, $1	2.50
	25.	Breakfast, 90 cents; dinner, 70 cents; supper, 95 cents	2.55
	26.	Breakfast, 75 cents; dinner, $1, supper, $1	2.75
	27.	Breakfast, 55 cents; dinner, $1; supper, $1	2.55
	28.	Breakfast, 85 cents; dinner, 90 cents; supper, 95 cents	2.70
	29.	Breakfast, 75 cents; dinner, $1; supper, 65 cents	2.40
	30.	Breakfast, 60 cents; dinner, 80 cents; supper, 90 cents	2.30
		Room, Dooner's Hotel, Philadelphia, Pa., 15 days, vou. 1	15.00
		Jurat	.25
			$300.05

J. Monroe Heiskell:

	30.	For services as examiner, Department of Justice, from April 1, 1889, to April 30, 1889, dates inclusive, 30 days, at $8 per day	240.00
		For expenses actually and necessarily incurred, as per following statement:	
	15.	Baggage and self to depot	1.25
		Railroad fare, Washington to St. Paul, Minn	29.00
		Sleeper to Chicago	4.50
		Breakfast, en route	.85
		Dinner, en route	1.00
		Supper, en route	.75
		Porterage on sleeper	.25
	16.	Breakfast, 90 cents; dinner, $1; supper, 85 cents; en route	2.75
	17.	Breakfast, 90 cents; dinner, $1; supper, 80 cents; en route	2.70
		Porterage on sleeper	.25
		Sleeper from Chicago to St. Paul	2.00
		Baggage and self to hotel, St. Paul	1.00
	19.	Cab hire, St. Paul, to prosecute business	2.00
	20.	Fare to Stillwater and return	1.00
		Fare to Minneapolis and return	.50
	22.	For cab hire, to prosecute business	2.50
	24.	Fare to Minneapolis and return	.50
	25.	Fare to Minneapolis and return	.50
	30.	Hotel bill at Hotel Ryan, vou. 1	45.50
		Jurat to this account	.25
			339.05

D. Ira Baker:

	30.	For services as examiner, Department of Justice, from April 1, 1889, to April 30, 1889, dates inclusive, 30 days, at $8 per day	240.00
	23.	Self and baggage to railroad depot for Indianapolis	.75
		Railroad fare to Indianapolis from Washington	16.00
		Seat in parlor-car to Harrisburg, en route	.75
		Dinner, en route	1.00
		Porterage on parlor-car	.25
		Sleeper, Harrisburg to Indianapolis	4.00
		Supper, dining-car	1.00
	24.	Breakfast, dining-car	1.00
		Dinner, dining-car	1.00

1889.		D. Ira Baker—Continued.		
Apr.	25.	Porterage, sleeper	$0.25	
		Self and luggage to hotel, Indianapolis	.50	
		Street-car fare at Indianapolis	.10	
	26.	Street-car fare (26th and 29th at 15 cents each), Indianapolis	.30	
		Hotel bill, 7 days, at $3 per day, viz, from April 24 to May 1, 1889 (vou. 1)	21.00	
		Affidavit to account	.25	
				$288.15
		William E. Hazen:		
	30.	For services as examiner, from April 15, 1889, to April 30, 1889, dates inclusive, 16 days, at $6 per day	96.00	
		For expenses actually and necessarily incurred, as per following statement:		
	16.	Railroad fare, Washington, D. C., to Philadelphia, Pa	4.00	
		Baggage transport, Washington, D. C	.25	
		Baggage transport, Philadelphia, Pa	.25	
		Supper in Philadelphia	.80	
	17.	Breakfast, 90 cents; dinner, 75 cents; supper, 80 cents	2.45	
	18.	Breakfast, 75 cents; dinner, 80 cents; supper, 70 cents	2.25	
	19.	Breakfast, 75 cents; dinner, 60 cents; supper, 90 cents	2.25	
	20.	Breakfast, 85 cents; dinner, 65 cents; supper, 80 cents	2.30	
	21.	Breakfast, 85 cents; dinner, 60 cents; supper, 60 cents	2.05	
	22.	Breakfast, 85 cents; dinner, 80 cents; supper, 85 cents	2.50	
	23.	Breakfast, 90 cents; dinner 60 cents; supper, 90 cents	2.40	
	24.	Breakfast, 75 cents; dinner, 80 cents; supper, 80 cents	2.35	
	25.	Breakfast, 90 cents; dinner, 70 cents; supper, 85 cents	2.45	
	26.	Breakfast, 70 cents; dinner, 90 cents; supper, 90 cents	2.50	
	27.	Breakfast, 70 cents; dinner, 80 cents; supper, 85 cents	2.35	
	28.	Breakfast, 85 cents; dinner, 80 cents; supper, 80 cents	2.45	
	29.	Breakfast, 75 cents; dinner, 90 cents; supper, 85 cents	2.50	
	30.	Breakfast, 80 cents; dinner, 85 cents; supper, 80 cents	2.45	
		Room in Philadelphia, 15 days, per voucher	15.00	
		Jurat	.25	
				149.80
		Frank B. Crosthwaite:		
		For services as examiner, Department of Justice, from April 1, 1889, to April 30, 1889, dates inclusive, 30 days, at $6 per day	180.00	
		For expenses actually and necessarily incurred, as per following statement;		
	1.	At Seattle, Wash., breakfast, 45 cents; dinner, 30 cents; supper, 50 cents	1.25	
	2.	At Seattle, Wash., breakfast, 75 cents; dinner, 40 cents; supper, 50 cents	1.65	
		Telegram, Seattle to Olympia, Wash., vou. 1	.40	
	3.	Seattle, Wash., breakfast, 65 cents; dinner, 35 cents; supper, 50 cents	1.50	
	4.	Seattle, Wash., breakfast, 70 cents; dinner, 40 cents; supper, 50 cents	1.60	
	5.	Seattle, Wash., breakfast, 60 cents; dinner, 30 cents; supper, 50 cents	1.40	
		Telegram, Seattle, Wash., to San Francisco, Cal., vou. 2.	.35	
	6.	At Seattle, breakfast, 75 cents; dinner, 30 cents; supper, 50 cents	1.55	
		Telegram, San Francisco, Cal., to Seattle, Wash., vou. 3.	.42	
	7.	At Seattle, Wash., breakfast, 70 cents; dinner, 30 cents; supper, 50 cents	1.50	
	8.	At Seattle, Wash., breakfast, 60 cents; dinner, 50 cents; supper, 50 cents	1.60	
	9.	At Seattle, Wash., breakfast, 70 cents; dinner, 40 cents.	1.10	
		Fare, Seattle, Wash., to Tacoma, Wash	.50	
		Supper at Tacoma, Wash	1.00	
		Sleeper, Tacoma, Wash., to Portland, Oregon	2.00	
		Lodging, 8 days, April 1 to 8 inclusive, at $1 per day, vou. 4	8.00	
		Transfer baggage and self, Tacoma, Wash	.50	
	10.	At Portland, Oregon, breakfast, 85 cents; dinner, 75 cents; supper, 75 cents	2.35	

1889.		Frank B. Crosthwaite—Continued.		
Apr.	10.	Transfer baggage and self, Portland, Oregon	$0.75	
		Pullman car, Portland, Oregon, to Cheyenne, Wyo., vou. 5	10.00	
	11.	Breakfast, Dallas, Oregon, 75 cents; dinner, Grand, Oregon, 75 cents	1.50	
		Supper at Pendleton, Oregon	.75	
	12.	Breakfast, 80 cents; dinner, 75 cents; supper, 75 cents; buffet car	2.30	
	13.	Breakfast, 65 cents; dinner, 75 cents	1.40	
	19.	Board and room, Denver, 6 days, at $4 per day, vou. 6	24.00	
		Fire in room Sunday, Apr. 14, vou. 6	.75	
	20.	At Denver, breakfast, 75 cents; dinner, 50 cents; supper, 50 cents	1.75	
	21.	At Denver, breakfast, 50 cents; dinner, 50 cents; supper, 50 cents	1.50	
	22.	At Denver, breakfast, 40 cents; dinner, 50 cents; supper, 50 cents	1.40	
	23.	At Denver, breakfast, 60 cents; dinner, 50 cents; supper, 50 cents	1.60	
	24.	At Denver, breakfast, 75 cents; dinner, 30 cents; supper, 50 cents	1.55	
	25.	At Denver, breakfast, 60 cents; dinner, 40 cents; supper, 50 cents	1.50	
	26.	At Denver, breakfast, 60 cents; dinner, 40 cents; supper, 50 cents	1.50	
	27.	At Denver, breakfast, 75 cents; dinner, 50 cents; supper, 50 cents	1.75	
	28.	At Denver, breakfast, 70 cents; dinner, 60 cents; supper, 60 cents	1.90	
	29.	At Denver, breakfast, 60 cents; dinner, 75 cents; supper, 60 cents	1.95	
	30.	At Denver, breakfast, 75 cents; dinner, 65 cents; supper, 50 cents	1.90	
		Oath to jurat	.25	
		Lodging, Denver, 12 days, $1 per day, vou. 7	12.00	
				$280.67
		L. P. Richardson:		
	25.	For services as stenographer, assisting J. Monroe Heiskell, examiner Department of Justice, while engaged in examination of charges against W. M. Campbell, United States marshal for Minnesota, under direction of Attorney-General, as per bill attached	57.50	
				57.50
		Frank Strong:		
May	31.	For services as general agent Department of Justice, from May 1, 1889, to May 31, 1889, dates inclusive, 31 days, at $10 per day	310.00	
		Bill Western Union Telegraph Company for April, 1889	7.19	
		Jurat	.25	
				317.44
		J. Monroe Heiskell:		
		For services as examiner, Department of Justice, from May 1, 1889, to May 31, 1889, dates inclusive, 31 days, at $8 per day	248.00	
		For expenses actually and necessarily incurred, as per following statement:		
	3.	Minneapolis and return to St. Paul	.50	
		Minneapolis, dinner	1.00	
		Cab, Minneapolis	2.00	
		Minneapolis and return to St. Paul	.50	
		Dinner	1.00	
	8.	Cab, St. Paul	2.00	
	10.	Bill, Hotel Ryan, St. Paul, vouch. 1	34.30	
		Baggage and self to depot en route to Omaha	1.00	
		Railroad ticket to Omaha	11.00	
		Supper	.85	
		Sleeper	2.00	
		Porter	.25	
	11.	Breakfast en route	1.00	

1889.		J. Monroe Heiskell—Continued.		
May	11.	Baggage and self hotel, Omaha	$1.00	
	13.	Bill, Murray Hotel, Omaha, vouch 2	15.00	
	27.	Bill, Paxson Hotel, Omaha, vouch. 3	61.50	
	28.	Baggage and self to depot	1.00	
		Ticket returning to Washington	30.25	
		Dinner en route	1.00	
	29.	Breakfast, Chicago	.90	
		Sleeper from Omaha to Chicago	2.50	
		Dinner en route	1.00	
		Porterage	.25	
		Sleeper, Chicago to Washington	6.50	
	30.	Breakfast en route, Altoona dining car	1.00	
		Dinner en route	1.00	
		Supper	.75	
	31.	Self and baggage to residence	1.00	
		Street-car fare, Omaha	1.25	
		Jurat to this account	.25	
				$431.55
		Frank B. Crosthwaite:		
		For services as examiner from May 1, 1889, to May 31, 1889, dates inclusive, 31 days, at $6 per day	186.00	
		For expenses actually and necessarily incurred, as per following statement:		
	1.	Meals, at Denver, breakfast, 40 cents; dinner, 50 cents; supper 50 cents	1.40	
	2.	Meals at Denver, breakfast, 60 cents; dinner, 30 cents; supper, 50 cents	1.40	
	3.	Meals at Denver, breakfast, 40 cents; dinner, 30 cents; supper, 50 cents	1.20	
	4.	Meals at Denver, breakfast, 60 cents; dinner, 50 cents	1.10	
		Transfer baggage and self to depot	.50	
		Supper at Palmer Lake, Colo	.75	
	5.	Hotel bill (see von. 1)	3.75	
	6.	Breakfast at Solida, Colo	.75	
		Dinner at Greenwood, Colo	.75	
		Transfer baggage and self	.50	
	7.	Hotel bill (see voucher 2)	2.00	
		Transfer baggage and self	.50	
		Dinner, Glenwood, Colo	.50	
		Supper, Leadville, Colo	.75	
		Transfer from depot to city and return	1.00	
		Sleeper, Leadville to Denver, Colo	2.00	
	8.	Breakfast, 70 cents; dinner, 60 cents; supper, 60 cents; Denver	1.90	
	9.	Breakfast, 60 cents; dinner, 50 cents; supper, 60 cents; Denver	1.70	
	10.	Breakfast, 60 cents; dinner, 50 cents; supper, 50 cents; Denver	1.60	
	11.	Breakfast, 75 cents; dinner, 60 cents; supper, 60 cents; Denver	1.95	
		Lodging May 1, 2, 3, 4, 9, 10, 11 (see von. 3)	7.00	
		Transfer self and baggage to depot	.75	
		Sleeper, Denver to Chicago	6.00	
	12.	Meals on dining car	2.25	
	13.	Breakfast, $1; dinner, 85 cents at Chicago	1.85	
		Transfer self and baggage, Chicago	.75	
		Sleeper, Chicago to Washington	4.50	
		Supper on train	.75	
	14.	Meals en route	2.25	
		Transfer self and baggage to house	.50	
	16.	One copy Desty Federal Procedure (see von. 4)	3.00	
		Oath to jurat	.25	
				241.85
		Leigh Chalmers:		
		For services as examiner, Department of Justice, from May 1, 1889, to May 3, 1889, dates inclusive, 31 days, at $8 per day	248.00	
		For expenses actually and necessarily incurred, as per following statement:		
	4.	Railroad fare from Washington, D. C., to Boston, Mass	11.50	

1889.		Leigh Chalmers—Continued.		
May	4.	Sleeper from Washington to New York	$2.00	
		Self and baggage from room to depot	.75	
	5.	Sleeping-car porter	.25	
		Breakfast, 75 cents; dinner, $1; supper, 75 cents	2.50	
	6.	Breakfast, 75 cents; parlor-car from New York to Boston, $1	1.75	
		Self from depot to hotel, Boston	.50	
		Street-car fare	.10	
	7.	Hotel bill, Vendome, Boston, vou 1	5.25	
		Self and baggage, hotel to room	.75	
		Supper, 75 cents; car fare, 15 cents	.90	
	8.	Breakfast, 75 cents; dinner, 95 cents; supper, 80 cents; car fare, 20 cents	2.70	
	9.	Breakfast, 85 cents; dinner, $1; supper, 75 cents; car fare, 15 cents	2.75	
	10.	Breakfast, 85 cents; dinner, 95 cents; supper, 75 cents; car fare, 20 cents	2.75	
	11.	Breakfast, 75 cents; dinner, 90 cents; supper, 80 cents; car fare, 20 cents	2.65	
	12.	Breakfast, 80 cents; dinner, $1; supper, 75 cents	2.55	
		Room rent, vou. 2	8.00	
	31.	Car fare from 12th to 31st, inclusive	3.30	
		Hotel bill, Boston, von 3	76.00	
				$374.95
		D. Ira Baker:		
		For service as examiner, Department of Justice, from May 1, 1889, to May 31, 1889, dates inclusive, 31 days, at $8 per day	248.00	
		For expenses actually and necessarily incurred, as per following statement:		
	2.	Street-car fare, Indianapolis to Huntsville and return	.30	
	6.	To railroad depot and return for Franklin, 50 cents; railroad fare to Franklin and return, $1.20; dinner, 75 cents; new lease	2.45	
	10.	To depot and return, 50 cents; to Kokomo and return, *in re* Martin, $3.20; dinner, 75 cents	4.45	
	14.	Depot and return, 50 cents; Lewellan to New Castle and return, $2.60; dinner, 75 cents	3.85	
	16.	*In re* Gardner, to Charlottesville, to depot and return, 50 cents; railroad fare to Charlottesville, and return, $1.70; dinner, 50 cents	2.70	
	19.	Street-car fare, Indianapolis, 10 cents; 20th, 20 cents; 21st, 10 cents; 23d, 15 cents	.55	
	27.	Street-car fare, 10 cents; 28th, 15 cents; 30th, 20 cents	.45	
	31.	Hotel bill (vou. 1) "The Dennison" for 31 days, at $2.50 per day (May 1st to 31st, inclusive), and fires	78.50	
		Affidavit to account	.25	
				341.50
		W. E. Hazen:		
	1.	For services as examiner from May 1, 1889, to May 31, 1889, dates inclusive, 31 days, at $6 per day	186.00	
	1.	Breakfast, 80 cents; dinner, 75 cents; supper, 90 cents; Philadelphia, Pa	2.45	
	2.	Breakfast, 80 cents; dinner, 85 cents; supper, 90 cents; Philadelphia, Pa	2.55	
	3.	Breakfast, 80 cents; dinner, 75 cents; supper, 90 cents; Philadelphia, Pa	2.45	
	4.	Breakfast, 85 cents; dinner, 75 cents; supper, 75 cents; Philadelphia, Pa	2.30	
	5.	Breakfast, 80 cents; dinner, 80 cents; supper, 80 cents; Philadelphia, Pa	2.40	
	6.	Breakfast, 80 cents; dinner, 75 cents; supper, 90 cents; Philadelphia, Pa	2.45	
	7.	Breakfast, 85 cents; dinner, 75 cents; supper, 90 cents; Philadelphia, Pa	2.50	
	8.	Breakfast, 80 cents; dinner, 70 cents; supper $1; Philadelphia, Pa	2.50	
	9.	Breakfast, 80 cents; dinner, 85 cents; supper, 80 cents; Philadelphia, Pa	2.45	

1889.		W. E. Hazen—Continued.	
May	10.	Breakfast, 75 cents; dinner, 80 cents; supper 90 cents; Philadelphia, Pa	$2.45
	11.	Breakfast, 80 cents; dinner, 70 cents; supper, 85 cents; Philadelphia, Pa	2.35
	12.	Breakfast, 90 cents; dinner, 50 cents; supper, 90 cents; Philadelphia, Pa	2.30
		Room rent, 12 days, at Dooner's, per vou	12.00
	13.	Fare, Philadelphia to Boston, $8.25; baggage to railroad, 50 cents	8.75
		Street-car fare 10 cents; sleeping car to Boston, $2	2.10
		Breakfast, 85 cents; dinner, 70 cents; supper, $1; Philadelphia, Pa	2.55
	14.	Porter in car, 25 cents; baggage from railroad, 50 cents.	75
	14.	Lunch on train, 35 cents; dinner, $1; supper, 80 cents; Boston	2.15
	15.	Breakfast, 75 cents; dinner, $1; supper, 75 cents; Boston	2.50
	16.	Breakfast, 75 cents; dinner, 90 cents; supper, 80 cents; Boston	2.45
	17.	Breakfast, $1; Dinner, 60 cent; supper, 90 cents; Boston	2.50
	18.	Breakfast, 90 cents; dinner, 80 cents; supper, 80 cents; Boston	2.50
	19.	Breakfast, $1; dinner, 80 cents; supper, 70 cents; Boston	2.50
		Room rent, six days, at Young's Hotel, vou	9.00
		Baggage in Boston	.50
	20.	Breakfast, 80 cents; dinner, 80 cents; supper, 95 cents; Boston	2.55
	21.	Breakfast, 95 cents; dinner, 80 cents; supper, 95 cents; Boston	2.40
	22.	Breakfast, 90 cents; dinner, 60 cents; supper, $1; Boston	2.50
	23.	Breakfast, 90 cents; dinner, 50 cents; supper, 90 cents; Boston	2.30
	24.	Breakfast, 95 cents; dinner, 60 cents; supper, $1; Boston	2.55
	25.	Breakfast, 90 cents; dinner, 60 cents; supper, 90 cents; Boston	2.40
	26.	Breakfast, 90 cents; dinner, 35 cents; supper, $1; Boston	2.25
		Room rent per vou., $8; street-car fare, 20 cents	8.20
	27.	Breakfast, 85 cents; dinner, 35 cents; supper, 90 cents; Boston	2.10
	28.	Breakfast, 80 cents; dinner, 45 cents; supper, 90 cents; Boston	2.15
	29.	Breakfast, 90 cents; dinner, 50 cents; supper, $1; Boston	2.40
	30.	Breakfast, 90 cents; dinner, 40 cents; supper, 90 cents; Boston	2.20
	31.	Breakfast, 85 cents; dinner, 50 cents; supper, $1; Boston	2.35
		Street-car fare, 10 cents; street-car fare, 10 cents	.20
		Room rent, five days, to and including May 31, vou	5.72
		Jurat	.25
			$307.92

James W. Nightingale:

	31.	For services as examiner, Department of Justice, from May 1, 1889, to May 31, 1889, dates inclusive, 31 days at $8 per day	248.00
		For expenses actually and necessarily incurred as per following statement:	
	1.	Breakfast, 85 cents; dinner, 65 cents; supper, 95 cents; Philadelphia, Pa	2.45
	2.	Breakfast, $1; dinner, 90 cents; supper, $1; Philadelphia, Pa	2.90
	3.	Breakfast, 90 cents; dinner, 70 cents; supper, 95 cents; Philadelphia, Pa	2.55

1889.			
	James W. Nightingale—Continued.		
May	4. Breakfast, $1; dinner, 80 cents; supper, $1; Philadelphia, Pa	$2.80	
	5. Breakfast, 75 cents; dinner, $1; supper, 85 cents; Philadelphia, Pa	2.60	
	6. Breakfast, $1; dinner, $1; supper, 70 cents; Philadelphia, Pa	2.70	
	7. Breakfast, $1; dinner, $1; supper, $1; Philadelphia, Pa	3.00	
	8. Breakfast, 85 cents; dinner, 75 cents; supper, 95 cents; Philadelphia, Pa	2.55	
	9. Breakfast, 45 cents; dinner, $1; supper, 95 cents; Philadelphia, Pa	2.40	
	10. Breakfast, $1; dinner, 95 cents; supper, 60 cents; Philadelphia, Pa	2.55	
	11. Breakfast, 90 cents; dinner, 80 cents; supper, 95 cents; Philadelphia, Pa	2.65	
	12. Breakfast, 60 cents; dinner, 95 cents; supper, 80 cents; Philadelphia, Pa	2.35	
	13. Breakfast, 70 cents; dinner, $1; supper, 85 cents; Philadelphia, Pa	2.55	
	14. Breakfast, $1; dinner, 75 cents; supper, 90 cents; Philadelphia, Pa	2.65	
	15. Breakfast, 95 cents; dinner, 85 cents; supper, 95 cents; Philadelphia, Pa	2.70	
	16. Breakfast, 75 cents; dinner, 95 cents; supper, $1; Philadelphia, Pa	2.70	
	17. Breakfast, 85 cents; dinner, 70 cents; supper, 80 cents; Philadelphia, Pa	2.35	
	18. Breakfast, 80 cents; dinner, 60 cents; supper, 90 cents; Philadelphia, Pa	2.35	
	19. Breakfast, 65 cents; dinner, 95 cents; supper, 85 cents; Philadelphia, Pa	2.45	
	20. Breakfast, $1; dinner, $1; supper, 80 cents; Philadelphia, Pa	2.80	
	21. Breakfast, 75 cents; dinner, $1; supper, 60 cents; Philadelphia, Pa	2.40	
	Room, Dooner's Hotel, Philadelphia, Pa., 20 days, May 1 to 21 inclusive, vou. 1	20.00	
	Self and baggage to depot, Philadelphia, Pa	.80	
	Railroad fare, Philadelphia to Pittsburgh, Pa	9.00	
	Sleeping car, Philadelphia to Pittsburgh, Pa	2.00	
	28. Sleeping-car porterage	.25	
	Self and baggage from depot, Pittsburgh, Pa	.65	
	Breakfast, dinner, supper, Pittsburgh, Pa	2.00	
	23. Breakfast, dinner, supper, Pittsburgh, Pa	2.00	
	24. Breakfast, dinner, supper, Pittsburgh, Pa	2.00	
	25. Breakfast, dinner, supper, Pittsburgh, Pa	2.00	
	26. Breakfast, dinner, supper, Pittsburgh, Pa	2.00	
	27. Breakfast, dinner, supper, Pittsburgh, Pa	2.00	
	28. Breakfast, dinner, supper, Pittsburgh, Pa	2.00	
	29. Breakfast, dinner, supper, Pittsburgh, Pa	2.00	
	30. Breakfast, dinner, supper, Pittsburgh, Pa	2.00	
	31. Expressage on package containing official books and papers, Pittsburgh, Pa., to Washington, D. C., vou. 2	.40	
	Breakfast, dinner, and supper, Pittsburgh, Pa	2.00	
	Room, Hotel Duquesne, Pittsburgh, Pa., 10 days vou. 3	20.00	
	Jurat	.25	
			$375.80
	J. Monroe Heiskell:		
June	29. For services as examiner, Department of Justice, from June 1, 1889, to June 30, 1889, dates inclusive, 30 days, at $8 per day		240.00

EXHIBIT F 5.—DEFENDING SUITS IN CLAIMS AGAINST THE UNITED STATES.

F. P. Dewees:
For expenses actually and necessarily incurred, as per following statement:

1888.				
July	1.	Transfer	$0.25	
		Railroad fare to Pittsburgh	9.00	
		Sleeper	2.00	
		One meal en route	1.00	
	2.	Transfer	.25	
		Three meals, $1, 75 cents, 75 cents	2.50	
		Hotel bill, vou. 1	1.50	
		Transfer	.25	
		Railroad fare, Pittsburgh to Philadelphia	9.00	
		Sleeper	2.00	
		Transfer	.25	
	3.	Three meals, $1, $1, 75 cents	2.75	
	5.	Two telegrams sent, vou. 2	.40	
		One telegram received*	.25	
	8.	Transfer	.25	
		Two meals, 50 cents, $1	1.50	
		Railroad fare, Philadelphia to New York	2.50	
		Parlor car	.50	
		One meal en route	1.00	
		Transfer	1.00	
		Fare to New Haven	.75	
		State-room	1.00	
		Transfer, New Haven	.50	
	9.	One meal	.75	
		Railroad fare to Springfield	1.35	
		Telegram sent, vou. 3	.27	
		Street-car fare (office business)	.36	
	10.	Hotel bill, voucher 4	4.50	
		Telegram received (vou. in hotel bill No. 4)	.26	
		Railroad fare to Meriden	.90	
		Transfer	.25	
		One meal	1.00	
		Jurat	.25	
			50.34	
		By disallowance as above*	25	
				$50.09

[The above expenses were incurred in taking deposition in cases of Marks & McAdams *vs.* United States, Congressional No. 704; and Berdan Fire Arms Manufacturing Company *vs.* United States.]

John Courteney, jr.:

31.	For services as special attorney between July 18, 1888, and July 31, 1888, 12 days, at $15 per day	180.00	
	For expenses actually and necessarily incurred, as per following statement:		
18.	Railroad fare from Washington to Point of Rocks, Md.	1,30	
	Breakfast, 75 cents; dinner, 75 cents; supper 75 cents	2.25	
19.	Hotel bill, vou. 1	1.60	
	Railroad fare to Dickinson station and return	.50	
18.	Cab hire	.25	
21.	Railroad fare from Point of Rocks to Hagerstown, Md	1.00	
23.	Hotel bill at Hagerstown, Md., vou. 2	4.00	
	Railroad fare, Hagerstown, Md., to Washington, D. C.	2.30	
	Supper	.75	
25.	Railroad fare, Washington to Keedysville, Md	1.95	
	Cab hire	.25	
26.	Hotel bill at Keedysville, Md., vou. 3	1.00	
	Telegram from Hagerstown, Md., to Washington, D. C., vou. 4	.25	

*Disallowed, no voucher.

1888.				
		John Courteney, jr.—Continued.		
July	26.	Railroad fare, Keedysville to Hagerstown, Md	$0.35	
	27.	Hotel bill at Hagerstown, vou. 5	2.00	
		Railroad fare from Hagerstown to Keedysville, Md	.35	
		Dinner at Keedysville, Md	.25	
		Bus fare, Keedysville to Sharpsburgh, Md	.25	
	31.	Hotel bill, Sharpsburgh, Md., vou. 6	5.00	
		Railroad fare, Keedysville to Washington	1.95	
		Bus fare, Sharpsburgh to Keedysville	.25	
		Jurat	.25	
				$208.05
		[Services rendered on following days: July 18, 19, 20, 21, 23, 24, 25, 26, 27, 28, 30, 31, 1888, in the following cases, viz: A. T. Snouffer *vs.* United States, No. 444, Congressional; J. L. Bett *vs.* United States, No. 749, Congressional, and S. A. Thomas *vs.* United States, No. 1038, Congressional.]		
		Lewis Cochran:		
		For expenses actually and necessarily incurred, as per following statement:		
	30.	Cab to station with baggage	.50	
		Railroad fare, Washington to Winchester, Va	2.70	
		Parlor car seat	.40	
		Lunch on train	.50	
	31.	Hotel bill, vou	2.00	
		Railroad fare, Winchester to Washington	2.70	
		Seat in parlor car	.40	
		Dinner on train	.75	
		Cab from station, Washington	.50	
		Jurat	.25	
				10.70
		[The above expenses were incurred in examination of witnesses in following cases: Bettie B. Riley *vs.* United States, Congressional No. 4464; Caroline H. Heater *vs.* United States, Congressional No. 3580; John H. Bunculler *vs.* United States, Congressional No. 4698.]		
		John Courteney, jr.		
Aug.	18.	For services as special attorney between Aug. 1, and Aug. 18, 1888, 18 days, at $15 per day	270.00	
		For expenses actually and necessarily incurred, as per following statement:		
	1.	Telegram, vou. 1	.29	
		Railroad fare from Washington to Martinsburgh, W. Va.	2.25	
		Cab hire	.25	
	2.	Telegram, vou. 2	.39	
	3.	Hotel bill, Martinsburgh, W. Va., vou. 3	2.50	
		Railroad fare, Martinsburgh, W. Va., to Hagerstown, Md	.70	
	4.	Railroad fare from Hagerstown to Washington, D. C	2.30	
	6.	Hotel bill at Stone Glen, Md., vou. 4	3.75	
		Railroad fare from Washington to Keep Tryst, Md	1.65	
	11.	Hotel bill at Keep Tryst, Md., vou. 5	5.00	
		Railroad fare from Keep Tryst to Adamstown, Md	.55	
		Railroad fare from Adamstown to Washington Junction, Md	.15	
		Railroad fare, Washington Junction to Washington	1.30	
		Cab hire	.25	
		Dinner at Point of Rocks, Md	.40	
	13.	Hotel bill at Stone Glen, Md., vou. 6	5.00	
		Railroad fare, Washington to Keedysville	1.95	
		Cab hire	.25	
	14.	Hotel bill and team at Keedysville, vou. 7	1.25	
	13.	Telegram, vou. 8	.27	
	16.	Hotel bill at Sharpsburgh, Md., vou. 9	2.50	
		Railroad fare and bus, Sharpsburgh to Hagerstown, Md.	.50	
	17.	Hotel bill at Hagerstown, Md., vou. 10	2.00	
		Railroad fare, Hagerstown to Keedysville, Md	.35	
		Dinner at Point of Rocks	.40	

1888.		Lewis Cochran—Continued.		
Aug.	17.	Railroad fare, Keedysville to Washington, D. C	$1.95	
	18.	Breakfast dinner, and supper, 75 cents each	2.25	
		Jurat	.25	
				$310.65
		[In the following cases, viz: Heirs of John Miller *vs.* United States, No. 2227, Congressional; Heirs of Samuel Reel *vs.* United States, No. 3209, Congressional.]		
		Felix Brannigan:		
		For expenses actually and necessarily incurred, as per following statement:		
	1.	Self and baggage to railroad station, Washington, D. C.	.50	
		Railroad fare, Washington, D. C., to Cumberland, Md.	4.55	
		Seat in parlor car, 75 cents; dinner, 75 cents	1.50	
	6.	Dinner at Cumberland, Md	.75	
	7.	Hotel bill, at Cumberland, Md. (supper, lodging, and breakfast), vou. 1	2.25	
		Baggage to train	.25	
		Railroad fare, Cumberland to Romney, W. Va	1.00	
		Stage fare, Romney to Moorefield, W. Va	2.00	
		Dinner, en route	.50	
	9.	Hotel bill at Moorefield, 2½ days, vou. 2	4.50	
	11.	Hotel bill at Petersburg, 1½ days, vou. 3	3.50	
	12.	Board and lodging at Greenland Gap, vou. 4	1.00	
	13.	Board and lodging near Mount Storm, 1 day, vou. 5	1.00	
	14.	Hotel bill, Fort Pendleton, Md., ¾ day, vou. 6	1.25	
		Livery stable, 5 days, Moorefield to Elkins, on 9th, 10th, 11th, 12th, and 13th, including meals of driver, horse feed, and tolls, vou. 7	22.00	
		Baggage to railroad	.25	
		Railroad fare, Elkins to Cumberland, Md	1.80	
		Dinner, at Piedmont, 50 cents; baggage transfer, 25 cents	.75	
	16.	Breakfast and dinner, Cumberland, 75 cents	1.50	
		Railroad fare, Cumberland to Washington	4.55	
		Baggage to depot, Cumberland	.25	
		Baggage from depot, Washington	.25	
		Jurat	.25	
				56.15
		[The within charged expenses were incurred, in the taking of depositions for claimants in the following suits pending in the Court of Claims: Nos. 593, 598, 599, 600, 613, 614, 619, 633, 1093, 1041, all Congressional.]		
		William I. Hill:		
		For expenses actually and necessarily incurred, as per following statement:		
	20.	Railroad fare, from Washington City to Keedysville, for the purpose of attending the taking of depositions in Bowman Act cases *vs.* United States	1.95	
	23.	Railroad fare, from Keedysville to Hagerstown	.65	
		Board and lodging as per vou	3.10	
	24.	Meals at Sharpsburgh and Hagerstown	2.50	
		Stage fare, Keedysville to Boonsborough	.50	
		Stage fare, Keedysville to Sharpsburgh and return, two trips each way	1.00	
	25.	Car fare, from Keedysville to Washington	1.95	
		Probate of account	.25	
				11.90
		[In the following cases, viz, 1244, 1262, 1279, 1283, 1290, 1313, 3574, 4252, 4254, 4255, 4257, 4294, 4295, 4296, 4299, 4323, 4332, 4333, 4335, 4350.]		
		Clarence A. Brandenburg:		
		For services and necessary expenses incurred, as commissioner in behalf of the United States at Washington, D. C., on the 28th of July, 1888, in taking depositions in the case of William Talbert *vs.* United States, No. 15220, Court of Claims.		
July	28.	1 day's services at $3 per day	3.00	

1888.		William I. Hill—Continued.		
July	28.	75.40 folios (by actual count) of 100 words at 15 cents per folio	$11.31	
		Additional as stenographer, 10 cents per folio	7.54	
		Attendance of witness, 1 day, July 28, at $1.50 per day	1.50	
				$23.35
		F. P. Dewees:		
		For expenses actually and necessarily incurred, as per following statement:		
Aug.	4.	Transfer to depot	.50	
		Washington to New York, railroad fare	6.50	
		Parlor car	1.25	
		Transfer	1.00	
		Two meals	2.00	
	17.	Two meals	2.00	
	18.	One meal	1.00	
		New York to Philadelphia, railroad fare	2.50	
		Parlor car	1.00	
		One meal	1.00	
		Transfer	.35	
	31.	One meal	.75	
Sept.	1.	Hotel bill, vou	1.50	
		Transfer	.55	
		Two meals, $1, $1	2.00	
		Philadelphia to Washington, railroad fare	4.00	
		Parlor car	.75	
		Transfer	.50	
		Jurat	.25	
				29.40
		[In Thatcher *vs.* United States, No. 1327 Congressional; Nourse *vs.* United States, No. 15449 Congressional. The above expenses were incurred in the examination of witnesses and in conference with counsel relative to the preparation of the cases for trial.]		
		Charles Mayr:		
		For services as United States Commissioner in behalf of the United States at Meriden, Conn., on the 10th day of July, 1888, in taking depositions in the case of the Berdan Fire-Arms Manufacturing Company *vs.* The United States, No. 15726, Court of Claims.		
July	10.	One day's services at $3 per day	3.00	
		22 folios (by actual count) of 100 words, at 15 cents per folio	3.30	
		Additional as stenographer, 10 cents per folio	2.20	
				8.50
		Charles Mayr:		
		For services as United States commissioner in behalf of the United States, at Springfield, Mass., on the 9th day of July, 1888, in taking depositions in the case of Berdan Fire-Arms Manufacturing Company *vs.* The United States, No. 15726, Court of Claims; one day's services, at $3 per day	3.00	
		74½ folios (by actual count) of 100 words, at 15 cents per folio	11.17	
		Additional as stenographer, 10 cents per folio	7.40	
				21.57
		J. C. Prewett:		
	19.	For services as special attorney on the 19th day of July, 1888, one day, at $10 per day		10.00
		[In case of Wm. McBride, administrator, *vs.* the United States, No. 1011, Court of Claims.]		
		Wm. I. Hill:		
		For expenses actually and necessarily incurred, as per following statement: For railroad fare, board, and lodging, on account of professional services rendered in taking depositions in certain Bowman Act cases *vs.* the United States Government, to wit: Nos. 1498, 1520, 1511, 1983, etc.;		

1888.			
		William I. Hill—Continued.	
Sept.	10.	For board and lodging, as per vou. 1	$2.00
	13.	For board and lodging, as per vou. 2	4.00
	14.	For board and lodging, as per vou. 3	1.50
		Two meals	1.00
		One meal	.40
		Stage fare	.50
	3.	Railroad fare from Washington to Halltown	1.80
		Railroad fare to Winchester	.85
		Railroad fare to Martinsburg	1.85
		Railroad fare to Williamsport	.50
		Railroad fare to Hagerstown	.75
	14.	Railroad fare to Washington	1.60
		Jurat	.25
			$17.00

Felix Brannigan:
For expenses actually and necessarily incurred, as per following statement:

	6.	Cab to railroad depot, Washington, D. C., self and baggage	.50
		Railroad fare, Washington, D. C., to Keedysville	1.95
	6.	Dinner, 75 cents; supper, 75 cents	1.50
		Stage fare, Keedysville to Sharpsburg, Md. (night extra)	.50
	8.	Hotel bill, Sharpsburgh, 1½ days, vou. 1	2.50
		Stage fare, Sharpsburgh to Keedysville	.25
		Dinner and supper at Keedysville, 50 cents each	1.00
		Stage to Sharpsburgh	.25
	10.	Hotel bill, Sharpsburgh, 1½ days, vou. 2	2.50
		Stage, Sharpsburgh to Keedysville	.25
	11.	Railroad fare, Keedysville to Hagerstown	.35
		Bus from depot, Hagerstown, 15 cents; baggage, 25 cents	.40
	12.	Hotel bill at Hagerstown, 1½ days, vou. 3	4.00
		Cab fare on Government business in Hagerstown	.75
		Bus to railroad depot, 15 cents; baggage, 25 cents	.40
		Railroad fare to Antietam Station	.45
		Supper at depot	.75
		Stage fare, Antietam to Sharpsburgh	.25
	13.	Lodging and breakfast, Sharpsburgh, vou. 4	1.00
		Stage fare, Sharpsburgh to Keedysville	.25
		Railroad fare, Keedysville to Piedmont	4.25
		Parlor car	.50
		Dinner en route	.75
		Supper at Piedmont	.75
	14.	Railroad fare, Piedmont to Cumberland	.85
		Breakfast	.75
	15.	Hotel bill at Cumberland, 1½ days, vou. 5	3.75
		Cab hire, Government business, Cumberland, 2 hours	1.50
	17.	Three meals at Cumberland, 75 cents each	2.25
		Railroad fare, Cumberland to Washington	4.55
		Sleeping car	2.00
	18.	Cab from depot, Washington, D. C., self and baggage	.50
		Notary's fee for jurat	.25
			42.45

[The foregoing expenses were incurred in the following cases in the Court of Claims: Congressional, 3182, G. W. Andrews; Congressional, 2157, C. M. Keedy; Congressional, 2137, Jacob Keedy; No. 1924, M. and N. Reynolds; Congressional, 2227, D. R. Miller.]

Robert A. Howard:
For expenses actually and necessarily incurred as per following statement:

July	20.	Steamboat fare and state-room, New York to Troy	2.50
		Supper on boat	1.00
	21.	Breakfast, Troy, N. Y	.75
		Railroad fare to Albany, 15 cents	.15
		Dinner, Albany, N. Y	1.00
		Railroad fare and parlor car, Albany to New York	4.10

1888.				
		Robert A. Howard—Continued.		
Aug.	2.	Hotel bill, New York, 2 days, vou. 1	$7.00	
		Affidavit to this account	.25	
				$16.75
		[The above expenses were incurred in taking testimony in the defense of the following case in the Court of Claims. I was in New York attending to French spoliation cases before and after these services; therefore the expenses are charged from and in New York. Jeremiah D. Green *v.* The United States, No. 15218.]		
		Clarence A. Brandenburg:		
		For services as commissioner in behalf of the United States at Washington, D. C., on the 8th day of Sept., 1888, in taking depositions in the case of Jno. J. Schillinger *et al. v.* The United States, No. 15595, Court of Claims.		
Sept.	8.	One day, to wit, Sept. 8, 1888, at $3 per day	3.00	
	8.	46.20 folios (by actual count) of 100 words at 15 cents per folio	6.93	
		Additional as stenographer, 10 cents per folio	4.62	
				14.55
		Lewis Cochran:		
		For expenses actually and necessarily incurred, as per following statement:		
	22.	Cab to boat	.75	
		Fare, Washington to Fortress Monroe by boat	2.00	
		State-room	1.00	
		Supper on boat	1.00	
		Baggage from steam-boat to Fortress Monroe	.25	
	28.	Omnibus, Old Point to Phœbus Station	.25	
		Railroad from Fortress Monroe to Richmond	2.60	
		Omnibus, Richmond to hotel	.25	
	29.	Hotel bill, Richmond, vou	3.75	
		Omnibus to railroad station, Richmond	.25	
		Fare, Richmond to Fortress Monroe	2.60	
		Omnibus to hotel from railroad station	.25	
Oct.	1.	From Fortress Monroe to Washington	2.00	
		Baggage to boat	.25	
		State-room	1.00	
		Supper on boat	1.00	
	2.	Cab from station	.75	
		Jurat	.25	20.20
		[The above expenses were incurred in taking depositions in Congressional cases Loftus D. Allen, No. 1043 and Albert L. Fisher, No. 1109.]		
		William C. McIntire:		
		For services as patent expert between the 7th day of July, 1888, and the 13th day of October, 1888:		
		For 4 days absent from city at $50 per day	200.00	
		For 5⅔ days at $25	145.83	
				345.83
		July 7 to 11. For 4 days' absent from city in Berdan *vs.* United States, at $50 per day, No. 15726, $200.00; July 24, one-fourth day Berdan case, No. 55726, $6.25; July 26, one-fourth day Talbert case No. 15220, $6.25; July 27, one-third day Talbert case, No. 15220, $8.33; July 28, one-half day Talbert case, No. 15220, $12.50; Sept. 8, 1 day Schillinger, No. 15595, $25; Sept. 29, one-half day consultation, Kelton, Schillinger, and Talbert, $12.50; Oct. 9, 1 day Ward case, No. 11, Congressional, $25.00; Oct. 11, 1 day Ward case, No. 11, Congressional, $25.00; Oct. 13, 1 day Kelton case, No. 15593, $25.00...	345.83	
				345.83
		H. J. May:		
		For expenses actually and necessarily incurred, as per following statement:		
	15.	Transfer to Washington depot	.50	
		Railroad fare from Washington to New York	6.50	

1888.		H. J. May—Continued.		
Oct.	15.	Pullman car	$2.00	
	16.	Transfer from New York City	1.00	
		Street-car fare on official business	.20	
		Room at Hoffman House vou. 1	1.00	
		Breakfast	1.00	
		Dinner	.65	
		Supper	.95	
		Transfer from hotel to Jersey City	1.00	
		Railroad fare, New York to Washington	6.50	
		Pullman, New York to Washington	2.00	
		Transfer, Washington	.50	
		Jurat	.25	
				$24.05

[The above expenditures were incurred in taking testimony in the case of Emil Fritz *vs.* United States, No. 15772, Court of Claims.]

Felix Brannigan:

For expenses actually and necessarily incurred, as per following statement:

14		Cab, self and baggage to railroad, Washington, D. C	.50
		Railroad fare to Baltimore, Md	1.20
		Supper at Baltimore	1.00
15		Transfer self and baggage at Baltimore	.75
15.		Railroad fare from Baltimore to Hagerstown	2.50
		Baggage from railroad at Hagerstown	.25
		Hotel bill at Hagerstown, vou. 1	2.00
		Baggage to railroad, Hagerstown	.25
		Railroad fare from Hagerstown to Berryville, Va	1.30
		Supper en route	.75
		Baggage from railroad at Berryville	.25
17.		'Bus at Berryville, 3 trips to telegraph office	.60
		Telegrams on official business, vou. 2, 3, 4	.60
		Hotel at Berryville, vou. 5	4.00
		Livery at Berryville to Lewis' near Boice, vou. 6	2.00
		Toll, 30 cents; dinner, 75 cents	1.05
		Stage from Lewis' to Winchester	1.00
		Supper at Winchester	.75
18.		Breakfast and dinner at Winchester, 75 cents each	1.50
		Railroad fare from Winchester to Charlestown	.70
		Railroad fare from Charlestown to Hagerstown, Md	1.20
		Baggage from railroad at Hagerstown	.25
19.		Hotel bill at Hagerstown, vou. 7	2.00
		Baggage to railroad, Hagerstown	.25
		Dinner at Hagerstown	.75
		Railroad fare from Hagerstown to Washington, D. C	2.30
		Supper en route	.75
		Cab from railroad at Washington, D. C., for self and baggage	.50
		Notary's fee for jurat to this account	.25
			31.20

[The expenses charged in the foregoing account were incurred in the following Congressional cases pending in the Court of Claims: No. 334, H. C. and S. Mumma *vs.* United States; No. 3190, T. O. Wyndham *vs.* United States; No. 1037, J. Snider *vs.* United States; No. 5328. M. Lewis *vs.* United States; No. 4954, A. Morrison *vs.* United States.]

J. H. Robinson:

31. For services as special attorney from the 26th day of October, 1888, to the 31st day of October, 1888, 5 days, at $10 per day 50.00

[In procuring evidence in the case of William West, administrator of Robert Davidson, deceased, No. 14678, *vs.* The United States, 5 days, October 26, 27, 29, 30, and 31.]

J. E. Williams:

1887. For services as attorney, 4 days, at $10 per day, as follows:

Dec. * For 1 day, Little Rock, in Blodgett case $10.00

1888.

Sept. 18. 3 days, Little Rock, 15th, 17th, 18th, in Hopkins' case, No. 426, Congressional case 30.00

40.00

Less disallowance 10.00

$30.00

R. P. Frierson:

For services as attorney on the 11th and 21st days of July, 1888, at $10 per day 20.00

[The above fees were incurred in appearing for the Government in the taking of depositions on the part of claimant in the case of McQuiddy *vs.* The United States, No. 1391, Congressional, U. S. Court of Claims, as follows: July 11, cross-examining witness, J. H. Thompson, $10.00; July 21, cross-examining witness, Geo. H. Davidson, $10.00; jurat—20.00.]

N. W. Ray:

For services as attorney of the United States from the 15th day of October, 1888, to the 17th day of October 1888, dates inclusive, 3 days, at $10 per day 30.00

[In cross-examining witnesses introduced by plaintiff in case of M. N. Leary's executors *vs.* The United States, No. 2149, Congressional case.]

H. J. May:

For expenses actually and necessarily incurred, as per following statement:

Nov. 3.	To transfer to depot at Washington, D. C.	.50
	Railroad fare, Washington to Indianapolis	16.00
	Berth in sleeper	4.50
4.	Breakfast	.75
	Dinner	.85
	Supper	.75
5.	2 transfers at Indianapolis	.50
	Hotel bill, Bates House, vou. 1	1.50
6.	Railroad fare, Indianapolis to St. Louis via Louisville, Ky	13.25
	Berth in sleeper from Huntingburg to St. Louis	2.00
7.	Transfer at St. Louis to depot	.50
	½ day's board, Lindell Hotel, vou. 2	2.00
	1½ days' board, Laclede House, vou. 3	4.50
8.	Street-car fare on official business	.60
	Transfer at St. Louis to depot	.50
	Railroad fare, St. Louis to Evansville	6.50
9.	Transfer to hotel at Evansville	.50
	Half day's board at St. George Hotel, Evansville, vou. 4.	1.50
	Transfer to depot	.50
	Railroad fare, Evansville, Ind., to Lexington, Ky	8.50
	[Stopped at Carrollton, Ind., on the 10th, 11th, 12th, and until the evening of the 13th, and did not engage in official business, but was on leave of absence.]	
13.	To telegrams on official business, vou. 5	.40
14.	Berth in sleeper from Huntingburg, Ind., to Louisville, Ky	1.50
	Transfer to hotel, Lexington, Ky	.25
	Board, ¾ day, at Phœnix Hotel, Lexington, Ky., vou. 6..	2.50
	Railroad fare from Lexington, Ky., to Washington	13.05
	Berth in sleeper	3.00
15.	Breakfast	.85
	Dinner	.75
	Supper	.75

* Disallowed because this item is in another fiscal year. The appropriation for that year is exhausted.

1888.		H. J. May—Continued.		
Nov.	15.	Transfer from depot, Washington	$0.50	
		Jurat	.25	
				$90.00
		[The above expenses were incurred in taking testimony in the cases of R. Y. Woodlief *vs.* United States, No. 15965, at St. Louis, Mo., and Sarah K. T. Baker *vs.* United States, Congressional No. 4371, at Lexington, Ky. Both cases are pending in the Court of Claims.]		
		Fred. C. Wade:		
		For services as counsel and attorney from the 9th day of August, 1888, to the 28th of August, 1888, dates inclusive, 20 days, at $20 per day	*400.00	
		For expenses actually and necessarily incurred, as per following statement:		
Aug.	15.	Railroad fare to Regina, N. W. T., and return, $12.95 each way	25.90	
		Dining-car both ways, $1.50 each way	3.00	
	19.	Horse hire in looking up evidence	4.00	
		Board and lodging, as per vou	21.75	
		Additional day after vou	2.00	
		Telegram	.40	
	15.	Sleeping-car both ways, $3 each way	6.00	
			463.05	
		Disallowed	160.00	
				303.05
		Robert L. Miller:		
		For services as United States commissioner in behalf of the United States at Washington, D. C., on the 10th day of November, 1888, in taking depositions in the case of Wm. H. Ward *vs.* The United States Congressional No. 11, Court of Claims:		
Nov.	10.	Ten folios (by actual count) of 100 words, at 15 cents per folio	1.50	
		Additional as stenographer, 10 cents per folio	1.00	
				2.50
		F. P. Dewes:		
		For expenses actually and necessarily incurred, as per following statement:		
	23.	Transfer	.25	
		Railroad fare, Washington to Harper's Ferry	1.65	
		Three meals, 50 cents; 50 cents; 90 cents	1.90	
		Telegram, vou	.25	
		Harper's Ferry to Washington	1.65	
		Transfer	.25	
		Jurat	.25	
				6.20
		[Lucas *vs.* United States, No. 499, Congressional.]		
		John Courteney, jr.:		
		For services as assistant attorney from the 3d day of November, 1888, to the 3d day of December, 1888, dates inclusive, 4 days, at $15 per day	60.00	
		For expenses actually and necessarily incurred, as per following statement:		
	30.	Cab hire	1.00	
		Railroad from Washington to New York	6.50	
		Dinner, 75 cents; supper, $1.25	2.00	
Dec.	1.	Breakfast, dinner, and supper, $1 each	3.00	
	2.	Breakfast, dinner, and supper, $1 each	3.00	
		Lodging at Murray Hill Hotel, vou. 1	4.00	
		Railroad fare from New York to Washington, D. C	6.50	
		Sleeper from New York to Washington, D. C., and necessary porterage	2.25	
		Breakfast, dinner, and supper	2.25	

* $160 of this item necessarily disallowed, the time charged for not coming within the terms of the contract.

1888.	John Courteney, jr.—Continued.		
Dec. 2.	Street-car fare and cab hire in New York	$1.50	
Nov. 30.	Parlor car Washington, D. C., to New York	1.50	
	Jurat	.25	
			$93.75
	[The above expenses incurred in taking testimony in the Boston Ice Company case of Aspinwall and Panama *vs.* United States, No. 27, Department, case pending in the Court of Claims.]		
	John Courtney, jr.:		
	For services as special attorney from the 20th day of November, 1888, to the 29th day of November, 1888, dates inclusive, 10 days, at $15 per day	150.00	
	For expenses actually and necessarily incurred, as per following statement:		
20.	Breakfast, dinner, and supper, 75 cents each	2.25	
21.	Railroad fare from Washington, D. C., to Keedysville, Md.	1.95	
	Cab hire	.25	
	Breakfast, 75 cents; dinner and supper at 50 cents each at Keedysville	1.75	
22.	Railroad fare from Keedysville, Md., to Hagerstown	.35	
24.	Railroad and bus fare to and from Hagerstown to Sharpsburgh, Md	1.00	
26.	Railroad and bus fare from Hagerstown to Sharpsburgh, and return	1.00	
	Supper at Sharpsburgh, Md	.40	
27.	Subpœna fees paid Lafayette Miller, witness for Government, vou. 2	1.50	
26.	Horse and buggy at Sharpsburgh, vou. 1	1.00	
28.	Board and lodging at Hagerstown from 22d to 28th, vou. 3	9.60	
	Cab hire	.25	
	Railroad fare from Hagerstown, Md., to Washington, D. C.	2.30	
	Breakfast, dinner, and supper, 75 cents each	2.25	
29.	Breakfast, dinner, and supper, 75 cents each	2.25	
	Jurat	.25	
			177.85
	[In the following cases, viz: Congressional No. 1266, No. 1325, and No. 277.]		
	J. H. Robinson:		
27.	For services as special attorney between the 5th day of Nov., 1888, and Nov. 27, 1888, 5 days, at $10 per day		50.00
	[For expenses actually and necessarily incurred, as per following statement: Procuring testimony in the case of Reuben B. Clark and Sayles J. Bowen, No. 14815, *vs.* The United States, at Memphis, Tenn., Nov. 5th, 6th, and 7th, 3 days. Taking testimony in the case of John C. Julian, No. 3793, *vs.* The United States, at Holly Springs, Miss., Nov. 26th and 27th, 2 days.		
	Robert L. Miller:		
	For services as United States commissioner in behalf of the United States at Department of Justice, Washington, D. C., on the 23d day of Nov., 1888, in taking deposition in the case of William Talbert *vs.* The United States, No. 15220, Court of Claims:		
23.	1 day, Nov. 23, at $3 per day	3.00	
	45 folios (by actual count) of 100 words, at 15 cents per folio	6.75	
	45 additional as stenographer, at 10 cents per folio	4.50	
			14.25
	John McBrooks:		
	For services as attorney representing the United States between the 2d day of Aug., 1888, and the 14th day of Sept., 1888, 18 days, at $10 per day	180.00	
	[Sept. 14. For 18 days' services as above stated, at $10 per day, to wit: Aug. 2, 3, 7, 8, 9, 10, 11, 15, 17, 21, 22, 23, 24, 25, 28, and 30, 1888, Sept. 5 and 14, 1888, in the following cases, to wit: At Memphis, 16		

1888.		John McBrooks—Continued.		
		days, 2, 3, 7, 8, 9, 10, 11, 15, 17, 21, 22, 23, 24, 25, 28, and 30, 1888, and Sept 14, 1888. Witness, Beckford, J. & J. Steele, No. —, Congressional; Edward Stack, No. —, Congressional; Charles Levy, No. —, Congressional; C. R. Dutton, deceased, 2936, Congressional; H. Hellette, deceased, No. —, Congressional; H. C. Dallis, No. 181, Congressional; James M. Flinn, No. 975, Congressional; Sarah E. Norton, T. C. Finney, deceased, Grace Ann Mitchell, Jesse Applewhite, Mary F. Pollan. And at Collierville, Tenn., Sept. 5, 1888, in the following cases: R. M. Anthony, deceased, Jesse Applewhite, No. 3316, Congressional; Piety Priddy and Wiley Cosgrove, deceased.]		
		For expenses actually and necessarily incurred, as per following statement:		
Sept.	4.	Railroad fare, Memphis to Rossville	$0.95	
		Dinner at Rossville, vou. 1	.50	
		Railroad fare, Rossville to Collierville	.20	
	5.	Board and lodging at Collierville, vou. 2	2.00	
		Railroad fare, Collierville to Memphis	.70	
				$184.35
		John G. B. Simms.		
		For services as attorney between the 14th day of Aug., 1888, and the 17th day of Aug., 1888, 3 days, at $10 per day	30.00	
		For expenses actually and necessarily incurred, as per following statement:		
		For services as attorney from the 11th day of Sept. to the 13th day of Sept., 1888, dates inclusive, three days, at $10 per day	30.00	
		[The above services were rendered in cross-examining, for Government, witnesses in case of (125) Ann D. Halsey's Administrators against the United States Government.]		
		For services as attorney from the 20th day of Nov., 1888, to the 21st day of Nov., 1888, dates inclusive, 2 days, at $10 per day, in cross-examining, for Government, witnesses called by claimant in case of Estate of C. M. Briggs *vs.* United States Government	20.00	
		Paid steam-boat fare from Lima, Ark., to Greenville, Miss., and return, 3 trips, at $2 each trip	6.00	
		To paid hotel bill at Greenville on 3 trips, per voucher hereto attached ($2 per day)	18.00	
				104.00
		Joseph R. Edwards:		
Nov.	17.	For services as special attorney on the 16th day of Nov., 1888, and the 17th day of Nov., 1888, 2 days, at $10 per day	20.00	
		For expenses actually and necessarily incurred, as per following statement: Bus hire and ferriage, meals, etc	1.80	
			21.80	
		By disallowance	1.80	
				20.00
		[Thad. Collard *v.* The United States, No. 4652.]		
		Lewis Cochran:		
		For expenses actually and necessarily incurred, as per following statement:		
	30.	Cab from station	.50	
		Railroad fare, Washington to Keedysville, Md	1.95	
		Parlor-car seat	.25	
		Stage, Keedysville to Sharpsburgh	.50	
Dec	1.	Hotel bill, voucher	2.00	
		Stage, Sharpsburgh to Keedysville	.50	
		Supper at Junction	.50	
		Railroad fare, Keedysville to Washington	1.95	
		Parlor-car seat	.25	

1888.				
		Lewis Cochran—Continued.		
Dec.	1.	Cab from station, Washington	$0.50	
		Jurat	.25	
				$9.15
		William C. McIntire:		
	6.	For services as patent expert from the 15th day of Oct., 1888, to the 6th day of Dec., 1888, dates inclusive, 20½ days, at $25 per day, as per following statement:		
		Oct. 16, to ½ day, Jabez H. Gill	12.50	
		Oct. 16, to ½ day, Morse	12.50	
		Oct. 17, to ½ day, Morse	12.50	
		Oct. 18, to ½ day, Morse	12.50	
		Oct. 20, to 1 day, Morse	25.00	
		Oct. 22, to 1 day, Morse	25.00	
		Oct. 23, to ¼ day, Morse	6.25	
		Oct. 24, to ¼ day, Morse	6.25	
		Oct. 24, to ½ day, Schillinger	12.50	
		Oct. 26, to 1 day, Morse	25.00	
		Oct. 27, to ½ day, Morse	12.50	
		Oct. 30, to 1 day, Morse	25.00	
		Oct. 31, to ¼ day, Morse	6.25	
		Nov. 1, to ¼ day, Morse	6.25	
		Nov. 2, to ½ day, Morse	12.50	
		Nov. 4, to ½ day, Morse	12.50	
		Nov. 5, to ¼ day, Morse	6.25	
		Nov. 6, to 1 day, Morse	25.00	
		Nov. 8, to 1 day, Morse	25.00	
		Nov. 10, to 1 day, W. H. Ward, 11 Congressional	25.00	
		Nov. 12, to ¼ day, W. H. Ward, 11 Congressional	6.25	
		Nov. 12, to ½ day, Morse	12.50	
		Nov. 13, to ¼ day, Morse	6.25	
		Nov. 14, to ¼ day, Morse	6.25	
		Nov. 16, to ½ day, Morse	12.50	
		Nov. 17, to ½ day, Morse	12.50	
		Nov. 19, to ½ day, Morse	12.50	
		Nov. 21, to ¼ day, Morse	6.25	
		Nov. 23, to 1 day, Talbert, No. 15220	25.00	
		Nov. 24, to ¼ day, Morse	6.25	
		Nov. 26, to 1 day, McAleer, No. 13376	25.00	
		Nov. 27, to 1 day, Morse	25.00	
		Nov. 28, to ½ day, Morse	12.50	
		Dec. 3, to ½ day, Morse	12.50	
		Dec. 4, to ¼ day, Morse	6.25	
		Dec. 6, to ½ day, Morse	12.50	
				506.25
		William I. Hill:		
		For expenses actually and necessarily incurred, as per following statement:		
		To expenses incurred in the taking depositions for the United States in the following Bowman-act cases from Nov. 20 to Dec. 2, Nos. 3201, 3200, 3199, 2431, 3196, 3197, 2432, 3095, 3098, 3211, 4329, 4330, 1816, 5925, as per vouchers, etc.:		
Nov.	20.	Railroad fare to Ronceverte	7.80	
		Two meals en route	1.50	
		Supper and night lodging	1.00	
	21.	Stage to Lewisburgh	.50	
		Meal and lodging at County House	.50	
	22.	Meal and lodging at County House	1.33	
	24.	Meal and lodging at County House	1.00	
	25.	Board and lodging per receipt from Nov. 25 to 29, inclusive, vou. 1	5.00	
		Board at hotel 1 day, and wagon hire from Nov. 20 to Nov. 30, inclusive, as per report, vou. 2	9.75	
Dec.	1.	Hire of wagon and team and expenses of driver from Falling Springs to Ronceverte, as per receipt, vou. 3	6.50	
	2.	Hotel bill as per rece't, vou. 4	2.00	
		Railroad fare Pullman car from Ronceverte to Washington	9.05	

1888.				
		William I. Hill—Continued.		
Dec.	2.	Two meals en route	$1.50	
		Notary's fee	.25	
				$17.68
		Felix Brannigan:		
		For expenses actually and necessarily incurred, as per following statement:		
	6.	Cab self and baggage, Washington, D. C	.75	
		Railroad fare, Washington to Philadelphia	4.00	
		Sleeper	2.00	
		Porter in sleeper	.25	
	7.	Breakfast in Philadelphia	1.00	
		Railroad fare, Philadelphia to Tacony	.25	
		Railroad fare, Tacony to New York	2.25	
		Seat in parlor car	.50	
		Hack from ferry in New York to hotel	1.00	
		Dinner and supper in New York, $1.00 each	2.00	
	8.	Lodging in New York, night of 7th, vou. 1	2.00	
		Three meals, $1.00 each	3.00	
	10.	Three meals, $1.00 each	3.00	
	11.	Three meals, $1.00 each	3.00	
		Lodging in New York, night of 10th, vou. 2	2.00	
		Cab from hotel to ferry New York	1.00	
		Railroad fare, New York to Washington, $6.50; sleeper, $2.00	8.50	
	12.	Porter of sleeping car, 25 cents cab from depot, Washington, 50 cents	.75	
		Notary's fee for jurat this account	.25	
				37.1
		[The expenses charged in the foregoing account were incurred in the following cases: David Myerle, exr., etc., *v.* The United States Nos. 14547, and 14548. A. B. Mullet *v.* The United States Congressional No. 88.]		
		Mason N. Richardson:		
		For services as United States commissioner and stenographer in behalf of the United States at Washington, D. C., on Sept. 30, 1888, in taking depositions in the case of Wm. H. Ward *v.* The United States, No. 4, Court of Claims, Congressional:		
Sept.	30.	Furnishing copy: 101 folios (by actual count) of 100 words, at 10 cents per folio		10.
		[The above represents a copy of the deposition of E. D. Clapp, in rebuttal.]		
		William I. Hill:		
		For expenses actually and necessarily incurred, as per following statement:		
Dec.	21.	For railroad fare from Washington to Manassas	1.00	
		Hotel bill, as per receipt	1.00	
		Railroad fare to Culpeper, Va	1.30	
	22.	Hotel bill, as per receipt	2.50	
		Railroad fare to Washington	2.00	
		Supper en route	.50	
		Probate	.25	
				8.1
		[These expenses were incurred in taking depositions for the Government in the following Bowman-act cases: Nos. 3082, 4939, 3022, 2694, Court of Claims.]		
		William C. Endicott, jr.:		
	7.	For services as special attorney from the 7th day of December, 1888, to the 18th day of December, 1888, dates inclusive, at $10 per day	120.00	
		Railroad fare from Washington to Savannah, Ga	17.50	
		Berth in sleeper from Washington to Savannah, Ga	4.50	
		Dinner on train	1.00	
		Supper on train	.75	
	8.	Necessary porterage	.50	
		Transfer for baggage to hotel, Savannah, vou. 1	.25	
	12.	Telegram to Department of Justice, Washington, vou. 2	.26	

1888.				
		William C. Endicott, jr.—Continued.		
Dec.	13.	Railroad fare from Savannah to Charleston, S. C	$4.60	
		Hotel bill, Savannah, Ga., vou. 1	24.00	
		Bus to station, Savannah, Ga., vou. 1	.50	
		Dinner on train	1.00	
		Pullman car to Charleston, S. C	.50	
		Transfer for baggage to hotel, Charleston, S. C., vou. 3	.25	
	14.	Telegram to A. M. Boozer, Columbia, S. C., vou. 4	.28	
	15.	Telegram to John F. Ficken, Columbia, S. C., vou. 5	.45	
		Telegram to A. M. Boozer, Columbia, S. C., vou. 6	.20	
		Telegram to chief clerk, Department of Justice, vou. 7	.35	
		Horse-car fare, Charleston, S. C	.30	
	17.	Hotel bill, Charleston, S. C., vou. 8	15.50	
		Necessary porterage	.25	
		Railroad fare from Charleston to Washington, D. C	16.50	
		Berth in sleeper from Columbia to Danville	2.00	
		Dinner at hotel, Columbia, S. C., vou. 9	.75	
		Supper at hotel, Columbia, S. C., vou. 9	.35	
		Horse-car fare, Columbia, S. C	.25	
		Necessary porterage	.25	
	18.	Pullman car from Danville to Washington	1.50	
		Breakfast on train	1.00	
		Dinner on train	1.25	
		Transfer, station to residence, Washington, vou. 10	.25	
		Necessary porterage	.25	
				$217.29

[McCarty *v.* United States, No. 3814; Eppstein *v.* United States; Mattick *v.* United States, No. 4006, Congressional; Strauss *v.* United States, 4024, cases; Lovell & Latinan *v.* United States, 4033; Ebbs *v.* United States, 4027.]

		John Courtney, jr.:		
	29	For services as special attorney between Dec. 4, 1888, and Dec. 29, 1888, 22 days, at $15 per day	330.00	
		For expenses actually and necessarily incurred, as per following statement:		
	4.	Breakfast, dinner, and supper, each 75 cents	2.25	
	5.	Breakfast, dinner, and supper, each 75 cents	2.25	
		Railroad fare from Washington, D. C., to Warrenton, Va	1.65	
	8.	Board and lodging, 2 days, at Warrenton, vou. 1	4.00	
		Railroad fare from Warrenton, Va., to Washington, D. C	1.65	
		Dinner and supper, 50 cents each	1.00	
	10.	Two meals, from Washington, D. C., to Grafton, W. Va., 75 cents each	1.50	
		Railroad fare, Washington, D. C., to Grafton, W. Va	7.60	
		Bus fare	.25	
		Parlor-car, Washington, D. C., to Grafton	1.25	
		Necessary porterage, Washington, D. C., to Grafton, W. Va	.25	
	11.	Board and lodging, at Grafton, W. Va., vou. 2	1.50	
		Railroad fare from Grafton to Clarksburgh	.65	
		Railroad fare, Clarksburgh to Weston, W. Va	1.00	
		Dinner, at Weston, W. Va	.50	
		Railroad fare from Weston to Clarksburgh	1.00	
		Railroad fare from Clarksburgh to Parkersburgh	2.45	
	12.	Board and lodging, at Parkersburgh, W. Va., vou. 3	1.50	
		Railroad fare, Parkersburgh to Point Pleasant, W. Va	2.35	
		Bus fare, Point Pleasant, W. Va	.15	
	15.	Board and lodging, Point Pleasant, W. Va., vou. 4	4.00	
		Railroad fare, Point Pleasant to Charleston, W. Va	1.75	
		Supper, at Charleston, W. Va	.75	
		Bus fare, Charleston, W. Va	.25	
		Board and lodging, Charleston, W. Va., vou. 5	1.00	
		Bus fare, at Charleston, W. Va	.25	
		Railroad fare, Charleston to Fayette Station, W. Va	1.40	
		Railroad fare, Fayette Station to Kanawha Falls, W. Va.	.40	
		Dinner, at Kanawha Falls, W. Va	.50	
		Railroad fare from Kanawha Falls, W. Va., to Charleston, W. Va	1.00	

1888.		John Courtney, jr.—Continued.		
Dec.	15.	Bus fare, at Charleston, W. Va	$0.25	
	17.	Board and lodging, at Charleston, W.Va., vou. 6	3.00	
		Railroad fare, Charleston to Kanawha Falls, W. Va	1.00	
		Bus fare, at Charleston W. Va	.25	
		Breakfast and dinner, at Kanawha Falls, 50 cents each	1.00	
		Railroad fare, Kanawha to Charleston	1.00	
		Bus fare, at Charleston, W. Va	.25	
	18.	Board and lodging, at Charleston, W. Va., vou. 7	1.00	
		Bus fare, at Charleston, W. Va	.25	
		Railroad fare, Charleston, W. Va., to Point Pleasant, W. Va	1.75	
		Breakfast, at Point Pleasant	.50	
		Railroad fare, Point Pleasant to Parkersburgh, W. Va	2.35	
		Supper, at Parkersburgh, W. Va	.75	
	19.	Railroad fare, Parkersburgh to Washington, D. C	10.00	
		Sleeper	2.00	
		Necessary porterage	.25	
		Breakfast, dinner, and supper, 75 cents each	2.25	
	20.	Railroad fare, Washington to Purcellville, Va	1.55	
	22.	Board and lodging for self and horse, vou. 8	2.00	
		Horse and buggy, at Purcellville, Va., vou. 9	2.00	
		Railroad fare, Purcellville to Washington, D. C	1.55	
	23.	Railroad fare, Washington to Dickinson Station, Md	1.10	
	24.	Railroad fare, Dickinson Station to Washington, D. C	1.10	
		Dinner and supper, 75 cents each	1.50	
	26.	Railroad fare, Washington to Hagerstown, Md	2.30	
		Bus fare	.25	
	29.	Board and lodging, at Hagerstown, Md., vou. 10	6.00	
		Railroad fare, Hagerstown, Md., to Washington, D. C	2.30	
		Bus fare	.25	
	31.	Jurat	.25	
				$426.05

A. M. Watson:

For services as attorney, Gibson *vs.* United States Court of Claims, No. 15,769, between the 19th day of July, 1888, and the 8th day of November, 1888, 18 days, at $10 per day 180.00

[Cross-examining plaintiff's witnesses and examining witnesses on part of defendant before S. C. McCandless, esq., United States commissioner, at 18 meetings and hearings, as by him noted, viz, July 19, 20, 26; August 2, 9, 16, 23, 30; Sept. 6, 13, 20, 27; Oct. 4, 11, 18, 25; Nov. 1 and 8.]

A. W. Anthony:

Nov. 27 For services as special attorney on Nov. 26 and 27, two days, at $10 per day 20.00

[Mary P. Staples *vs.* United States, Congressional, 3317; John Robinson *vs.* United States, Congressional, 3381.]

George W. Palmer:

For services as commissioner in behalf of the United States at New York City, on Dec. 10, 1888, in taking depositions in the case of David Myerle, ex., *vs.* The United States, No. 14547, Court of Claims.

Dec.	10.	One day's services at $3 per day	3.00	
		36½ folios (by actual count) of 100 words, at 15 cents per folio	5.48	
		36½ additional as stenographer, 10 cents per folio	3.65	
				12.13

Dan. B. Cassidy:

Nov.	24.	For services as special attorney on Oct. 29, Nov. 1, 15, 22, 23, and 24, 6 days, at $10 per day	60.00	
		For expenses actually and necessarily incurred, as per following statement:		
Oct.	29.	Steam-boat fare, Eddyville to Dover, Tenn	2.00	

1888.	Dan. B. Cassidy—Continued.		
Nov. 24.	Three days' board, vou	$4.50	
	Steam-boat fare, from Dover to Eddyville, Ky	2.00	
			$68.50
	[Jno. B. Eads *vs.* United States, No. 1354, Congressional; Elizabeth Eads *vs.* United States, No. 5877, Congressional.]		
	L. P. Sandels:		
6.	For services as attorney, taking depositions on Oct. 24, 27, Nov. 3, 6, 4 days, at $10 per day		40.00
	[Hayman *vs.* United States, No. 3993, Congressional.]		
	Frank K. Winchester:		
23.	For services as special attorney between Nov. 13, 1888, and Nov. 23, 1888, 5 days, at $10 per day		
Mar.	Varina B. Gaither *vs.* United States, 1 day	*10.00	
Nov. 13,15.	George R. Dent *vs.* United States, 2 days	20.00	
	Traveling expenses to Fayette and return in above case, railroad fare	2.50	
22.	Aldrich *vs.* United States, 1 day	10.00	
23,24.	Julia A. Nutt *vs.* United States, 2 days	20.00	
			62.50
Disallowed		10.00	
			52.50
	John McBrooks:		
Dec. 22.	For services as attorney, representing the United States between Oct. 29, 1888, and December 22, 1888, 18 days, at $10 per day	180.00	
	For expenses actually and necessarily incurred, as per following statement:		
Oct. 29.	Railroad fare to Brownsville, Tenn., from Memphis, Tenn	1.70	
	Supper on train	.50	
30.	Board at Brownsville, 2 days, vou. 1	1.50	
	Railroad fare back from Brownsville	1.70	
	Bus from depot home	.50	
Nov. 26.	Railroad fare, Memphis to Byhalia, Miss	.85	
	Dinner, at Byhalia, Miss	.50	
	Railroad fare from Byhalia back to Memphis	.85	
	Bus from depot home at night	.50	
Dec. 8.	Railroad fare from Memphis to Germantown	.45	
	Dinner, at Germantown, vou. 2	.25	
	Railroad fare from Germantown to Memphis	.45	
	Bus home at night from depot	.50	
			190.25
	[Oct. 29, 30, at Brownville, Tenn., in case of Jno. Stewart *vs.* United States, No. 1089, Spoliation, 2 days, at Memphis, Tenn. Nov. 1, 5, 17, 19, 27, Dec. 4, 5, 6, 7, 12, 13, 14, 19, 20, 21, in following cases: W. H. Rodgers, No. —, Congressional; Amos Woodruff, No. —, Congressional; Jesse Applewhite, No. 3316; Edward Stack, No. 4366; Margaret B. Raefirrel, administratrix, No. 1622, Congressional; W. A. Bickford, No. —, Congressional; Wilkins Thomas, No. 1416, Congressional; David S. Greer, Congressional; Jas. M. Provine, deceased, No. 195, Congressional; John Pietman, deceased, No. —, Congressional; Francis Malliter, No. —, Congressional; Grace A. Mitchell, No. —, Congressional; Berry F. Hart, No. —, Congressional; Sarah E. Norton, administrarix, No. —, Congressional; 14 days. Nov. 26, at Byhalia, Miss., 1 day, in case of W. H. Rodgers, No. —, Congressional. Dec. 8, at Germantown, Tenn., in cases of Jackson P. Lewis; John G. Thurman; Francis Molliter, deceased; Berry F. Hart, deceased; L. A. Rhodes, deceased; Benjamin Cash, all Congressional.]		

* Disallowed on this account for being in another fiscal year.

1888. Frederick S. Stratton:
Dec. 14. For services as special counsel between the 3d day of Dec., 1888, and Dec. 14, 1888, 4 days, at $20 per day $80.00
[Case of Adolph Sutro *v.* The United States, No. 1158, Congressional.]

S. W. John:
1. For services as special attorney at law on Nov. 30, 1888, and the 1st day of Dec., 1888, 2 days, at $10 per day 20.00
[In suit of M. E. Saffold *vs.* United States, No. 2155, Congressional.]

C. C. Dickinson:
Nov. 7. For services as special attorney on Oct. 25, 1888, and Nov. 7, 1888, 2 days, at $10 per day 20.00
[Robinson *vs.* United States, No. 3387, Congressional.]

1889. John Mc Brooks:
Jan. 9. For services as attorney representing the United States, between the 5th day of Jan., 1889, and the 9th day of Jan., 1889, 2 days, at $10 per day 20.00
[For services Jan. 5 and 9, 1889, at Memphis, Tenn., in the following cases: Edward Stack, No.—, Congressional, and Amos Woodruff, *v.* United States, W. A. Bickford *v.* United States.]

1888. R. H. Weddington:
Dec. 23. For services as special attorney between the 28th day of Nov., 1888, and the 23d day of Dec., 1888, 5 days, at $10 per day $50.00
For expenses actually and necessarily incurred, as per following statement:
Nov. 28. To attending at the law office of R. H. Weddington, in Prestonburgh, Ky., before Edward Ford, notary public, and cross-examining for the Government Aquilla Harmer and Samuel May, in the case of Samuel May, claimant, *vs.* The United States, defendant, Congressional claim No. 303, 1 day 10.00
To going to Catlettsburgh, a distance of about 75 miles, under notice from the opposite party to take the deposition of O. C. Bowles, which by agreement was to be read in the above-named cause, and the claim of B. C. May, administrator of W. G. May, deceased, Congressional case No. 233, 1 day 10.00
Dec. 21. Paid ferriage on steamer *Frank Preston* from Prestonburgh to Catlettsburgh, Ky., a distance of about 75 miles (see receipt of clerk here filed, marked A) 2.00
22. Attending the taking of said Bowles's deposition at Catlettsburgh, Ky., and cross-examining him, 1 day 10.00
Paid hotel bill at John Hamilton's and Chry's house (see receipt here filed, marked B) ..... .50
23. Return trip home on the *Frank Preston*, which came as far as Paintsville that day, 1 day 10.00
Paid ferriage on said boat from Catlettsburgh to Paintsville (see receipt here filed, marked C) 1.00
Nov. 29. To attending at the law-office of R. H. Weddington, in Prestonburgh, Ky., before Edward Ford, notary public, and cross-examining Aquilla Harmer and Samuel May, in the claim of B. C. May, administrator of William J. May, deceased, plaintiff, *vs.* The United States, defendant, No. 233, 1 day 10.00
103.50

R. H. Weddington:
20. For services as special attorney from the 17th day of December, 1888, to the 20th day of December, 1888, dates inclusive, 4 days, at $10 per day, as per following statement:
17. To attending at the law-office of R. H. Weddington, in Prestonburgh, Ky., before Edward Ford, a notary public for Floyd County, Ky., and cross-examining A. H. Gearheart, administrator of the estate of Esther Gearheart, deceased, claimant, *vs.* The United States, defendant, 1 day 10.00

1888.		R. H. Weddington—Continued.		
Nov.	18.	To completing the examination of said Gearheart, and attending and cross-examining W. H. Fitzlaterick, at the same place and before the same examiner, and in the same case as above, 1 day	$10.00	
	19.	To cross-examining Jas. F. Ford, Edward Horn, and Mary Hunly, at the same place and before the same notary, and in the same case as above, 1 day	10.00	
	20.	To attending and cross-examining Joshua Bingham at the same place and before the same notary, and in the same case, 1 day	10.00	
				$40.00
		[All the above witnesses were introduced by and for claimant.]		
		George H. Ellis:		
Dec.	28.	For services as special attorney between the 14th day of December, 1888, and the 28th day of December, 1888, 12 days, at $10 per day		120.00
		[C. T. Dunn *vs.* United States, 1906, Congressional.]		
		A. M. Lea:		
Nov.	26.	For services as special counsel for the United States on the 26th day of November, 1888, 1 day, at $10 per day		10.00
		[For expenses actually and necessarily incurred, as per following statement: Service above rendered under direction of Hon. Robert A. Howard, Assistant Attorney-General, in taking deposition of claimant in case of Eliza A. Green *vs.* United States, No. 3557, Congressional.]		
1889.		Charles E. Yeater:		
Jan.	15.	For services as special attorney between the 28th day of August, 1888, and the 15th day of January, 1889, 7 days, at $10 per day		70.00
		[For expenses actually and necessarily incurred, as per following statement: The above expenses and fees were incurred in appearing and cross-examining witnesses called by claimants in the following cases against the United States, as specified in the items charged, viz:]		
1888.				
Aug.	29.	To one day at Urbana, Mo., case of E. V. Atchley, administrator	10.00	
	28.	Dinner at Clinton (going)	.50	
		Omnibus fare at Clinton (going) round trip	.50	
		Supper at Sentinel Prairie (going)	.50	
	29.	Breakfast	.50	
		Dinner and supper at Urbana, at 50 cents	1.00	
	30.	Breakfast at Urbana	.50	
		Dinner, at Sentinel Prairie (returning)	.50	
		Supper, at Humansville	.50	
		Omnibus (round trip)	.50	
	31.	Breakfast, at Humansville	.50	
		Amount paid for buggy and driver, Humansville to Urbana, vou	5.00	
		Dinner and supper, at Clinton (returning), at 50 cents	1.00	
		Omnibus fare, round trip	.50	
		Railroad fare, Sedalia to Humansville and return, 160 miles	4.80	
Nov.	27.	One day at Humansville, case of J. W. Luttrell, administrator	10.00	
	28.	One day at Humansville, case of J. W. Luttrell, administrator	10.00	
	26.	Dinner, at Clinton (going)	.50	
		Omnibus fare at Clinton, (going, round trip)	.50	
		Supper, at Humansville	250	
	27.	Breakfast, dinner and supper, at Humansville at 50 cents	1.50	
	28.	Breakfast, dinner and supper, at Humansville, at 50 cents	1.50	
	28.	Omnibus fare, round trip	.50	
		Breakfast, at Humansville	.50	

1888.		Charles E. Yeater—Continued.		
Nov.	28.	Dinner and supper, at Clinton, at 50 cents	$1.00	
		Omnibus fare, round trip, returning	.50	
		Railroad fare, Sedalia to Humansville and return, 160 miles	4.80	
Dec.	4.	One day at Bunceton, Mo., case of China Withers, administratrix	10.00	
		Breakfast, dinner, and supper, at Bunceton, at 50 cents	1.50	
		Railroad fare, Sedalia to Bunceton and return, 96 miles	2.85	
	6.	One day at Sedalia, case of J. W. Luttrell, administrator	10.00	
1889.	12.	One day at Sedalia, case of China Withers, administratrix	10.00	
Jan.	15.	One day at Sedalia, case of China Withers, administratrix	10.00	
				$102.59
1889.		William B. Skinner:		
Jan.	7.	For services as special attorney on Jan. 7, 1889, at $10 per day		10.00
		[D. C. Allen *v.* United States, 3925 Congressional.]		
		John Newton:		
		For services rendered as expert witness in the case of A. W. Von Schmidt *v.* The United States, Court of		
1888.		Claims, Congressional, No. 89.		
Dec.	13.	For round trip ticket between New York and Washington	10.00	
13 to	17.	For two parlor-car fares, going and returning	2.50	
		Two meals on cars, going and returning	2.00	
	17.	Board for two days, as per sub. vou	10.00	
				24.50
1889.		C. H. Whiteside:		
Jan.	4.	For services as special attorney on the 4th day of January, 1889, 1 day at $10 per day		10.00
		[David S. Noe *vs.* United States, No. 1677.		
		David S. Noe, Sr. *vs.* United States, No. 1677.]		
		J. E. Williams:		
	3.	For services as attorney on the 3d day of January, 1889, 1 day, at $15 per day	15.00	
		For expenses actually and necessarily incurred, as per following statement:		
		Railroad fare, Little Rock to Malvern and return	2.35	
		Amount for dinner, at Malvern	.50	
				17.85
		[Nunn *vs.* United States, Congressional, No. 630.]		
		S. C. McCandless:		
		For necessary expenses incurred as commissioner in behalf of the United States at Pittsburgh, Pa., on the 28th of November, 1888, in taking depositions in the case of Margaret M. Gibson *vs.* The United States, No. 15769, Court of Claims:		
		Mileage of witness from Neville Island and Coraopolis to Pittsburgh and return, 92 miles, at 5 cents per mile each way	4.60	
		Attendance of witnesses, 6 at 1 day, to wit: Harry B. Hulings, John B. Cochran, Henry Hahn, John F. Craig, James Lighthill, Mark M. Watson, at $1.50 per day	9.00	
		Jurat	.25	
				13.85
		J. G. White:		
	10.	For services as United States counsel, between the 11th day of December, 1888, and the 10th day of January, 1889, 7 days, at $10 per day, as per following statement, Chas. M. Wells, administrator, *vs.* The United States,		
1888.		Congressional, 1955:		
Dec.	11.	Testimony of plaintiff before United States Commissioner J. C. Ryan	10.00	
	12.	Testimony of plaintiff before United States Commissioner J. C. Ryan	10.00	
	15.	Testimony of plaintiff before W. W. Whittington, special United States commissioner	10.00	
	19.	Testimony of plaintiff before W. W. Whittington, special United States commissioner	10.00	
1889.				
Jan.	7.	Testimony of plaintiff before W. W. Whittington, special United States commissioner	10.00	

1889.		J. G. White—Continued.		
Jan.	8.	Testimony of plaintiff before W. W. Whittington, special United States commissioner	$10.00	
	10.	Testimony of plaintiff before W. W. Whittington, special United States commissioner	10.00	
				$70.00
1888.		J. K. P. Palmer:		
Dec.	26.	For services as counsel for Government between the 19th day of November, 1888, and the 26th day of December, 1888, 7 days, at $10 per day	70.00	
		For expenses actually and necessarily incurred, as per following statement: G. B. Antley, hire for horse 3 days.	*3.75	
				73.75
		By disallowance	3.75	
				70.00
		[The foregoing account is for taking testimony or examining witnesses examined by claimants in the following cases, and on the dates annexed thereto, to wit: No. 2724, Turner Babbett *vs.* United States, Nov. 19, 1888; No. 2731, Jas. W. Stewart *vs.* United States, Nov. 19, 1888; No. 3188, Wright A. Moore *vs.* United States, Nov. 28, 1888; No. 2195, Pascal D. Hammond *vs.* United States, Nov. 21 and 22, 1888; No. 2192, Louisa Thomas *vs.* United States, Nov. 21 and 22, 1888; No. 2193, D. J. Burn, W. C. Johnson *vs.* United States; No. 1227, Mary Powell *vs.* United States, and for the horse hire as per above voucher.]		
1889.		J. M. Anderson:		
		For services as special attorney between the 1st day of Dec., 1888, and the 30th day of Jan., 1889, 2 days, at $10 per day		20.00
		[Bondurant *vs.* United States, No. 2200, Congressional.]		
1888.		George W. Cross:		
Oct.	1.	For services as special attorney between the 1st day of Aug., 1888, and the 1st day of Oct., 1888, 2 days, at $10 per day	20.00	
		For expenses actually and necessarily incurred, as per following statement:		
		Railroad fare, from Manchester to Deckard, a distance of 48 miles, at 3 cents per mile	1.44	
		Dinner and supper, at Deckard	1.00	
				22.44
		[J. G. Willis, administrator of J. T. Crocket, *vs.* United States, Congressional, No. 2565.]		
		L. P. Sandels:		
Nov.	30.	For services as special attorney from the 28th day of Nov., 1888, to the 30th day of Nov., 1888, dates inclusive, 3 days, at $10 per day		30.00
		[In McCombs *vs.* the United States, No. 3987, Nov. 28 and 29, 1888, 2 days; in Sarah Ann Tobin *vs.* the United States, No. 3498, Nov. 30, 1888.]		
1889.		R. J. Meigs:		
Jan.	9.	For copy of records, United States *v.* Squares, 687 and 688		5.35
		[Evidence for defendant in case of Dunnington *et al.* *v.* United States, No. 15783, Court of Claims.]		
		F. P. Dewees:		
		For expenses actually and necessarily incurred as per following statement:		
Feb.	3.	Transfer	.25	
		Railroad fare, Washington to Philadelphia	4.00	
		Parlor-car	.75	
		Transfer, Philadelphia	.20	
		One meal	1.00	

*This item will be charged in another account, as it is required that a subvoucher and the statement for the necessity for private conveyance be furnished with the account.

1889.		R. J. Meigs—Continued.		
Feb.	4.	Railroad fare, Philadelphia to New York	$2.50	
		Parlor-car	.50	
		Transfer, New York	1.00	
		Two meals, $1 each	2.00	
	5.	Two meals, $1 each	2.00	
		Transfer	1.00	
		Hotel bill, vou	2.50	
	6.	Two meals, $1 each	2.00	
5 and	3.	Hotel bill, vou	4.00	
		Railroad fare, New York to Washington	6.50	
		Parlor-car	1.25	
		Transfer	.25	
		Jurat	.25	
				$31.95
		[Huestis *v.* United States, No. 14054, Guy *v.* United States.]		
		John F. Montague:		
Aug.	6.	For services as special attorney on the 6th day of Aug., 1888, 1 day, at $10 per day		10.00
		[In the case of Elizabeth Hensley *v.* United States, No. 992, Congress.] Employed Aug. 6, 1888. Sept. 1, 1888, instructed to hold up for want of necessary appropriation. Dec., 1888, instructed to proceed with the cases.—J. F. M.]		
		Enos Richmond:		
Oct.	31.	For services as special agent between the 14th day of Oct., 1888, and the 31st day of Oct., 1888, 14 days, at $10 per day	140.00	
		For expenses actually and necessarily incurred as per following statement:		
	14.	Railroad fare from Elmer, N. J., to Washington, D. C	4.80	
	17.	Howard House, hotel bill, vou. 1	8.00	
		Railroad fare from Washington to Elmer	4.80	
	21.	Railroad fare from Elmer to Washington	4.80	
	22.	Howard House, hotel bill, vou. 2	3.00	
		Railroad fare from Washington to Memphis	22.90	
		Sleeper	6.00	
	23.	Breakfast at Grafton	.75	
	23.	Dinner at Chillicothe	.75	
		Supper at Cincinnati	.75	
	24.	Breakfast at Guthrie	.50	
		Dinner on the train	.75	
		Omnibus from depot to hotel	.25	
	25.	Peabody Hotel bill, vou. 3	3.00	
		Railroad fare from Memphis to Vicksburg, Miss	6.60	
		Omnibus from Vicksburg to Klinston and return	1.00	
		Supper at Clarksdale	.75	
	26.	Omnibus from depot to hotel	.25	
	27.	Omnibus to Mr. Gee's and return	.50	
	28.	M. H. Pine & Co., livery bill, vou. 4	2.50	
	29.	Omnibus to Klinston and return	1.00	
	30.	J. W. Smith, livery bill, vou. 5	2.00	
	31.	Lay Lindsay, commissioner's fees, vou. 6	.50	
		L. W. Lowenberg, commissioner's fees, vou. 7	.50	
		M. C. Pine & Co., livery bill, vou. 8	2.50	
		Jurat fee	.25	
				219.40
		[This to certify that I was engaged in investigating a cotton claim for the Department of Justice, and hunting up evidence for the Government, and that the transportation by teams charged for in this account was necessary for the public service, and that there was no public conveyance to the points visited.—Enos Richmond.]		
		Enos Richmond:		
Nov.	30.	For services as special agent from Nov. 1, 1888, to Nov. 30, 1888, dates inclusive, 30 days, at $10 per day	300.00	
		For expenses actually and necessarily incurred as per following statement:		
	1.	Washington Hotel bill, Vicksburg, Miss., vou. 1	17.50	

1889.		Enos Richmond—Continued.	
Nov.	1.	Omnibus from hotel to boat	$0.50
		Steam-boat fare from Vicksburg to Lake Providence	3.00
	2.	Dinner at Van Fossen Store	.65
	3.	Chas. Whittington, livery bill, vou. 2	4.50
		Dinner at Noles' Store	.75
	5.	F. Strong, livery bill, vou. 3	1.00
		Dinner at Kilborne's Store	.75
	6.	George W. Mooney, services as per receipt, vou. 4	5.00
		Henry Greene, witness fee, vou. 5	1.00
		L. Miles, justice fee, vou. 6	1.00
	7.	Ferriage of team over Bayou Macon	.40
		Dinner at C. Myers'	.75
	8.	F. A. Cooper, witness fee, vou. 7	.40
		H. J. Cheatham, justice fee, vou. 8	1.25
	9.	Henry Holt, services as per receipt, vou. 9	10.00
		Henry Holt, hotel bill, vou. 10	12.50
		Ferriage of team over Bayou Macon	.40
		Dinner and horse-feed at Pilcher Point	.75
		Chas. Whittington, livery bill, vou. 11	28.00
		Supper at restauraut	.75
		Omnibus to steam-boat	.25
	10.	Steam-boat fare, Lake Providence to Greenville, Miss.	3.00
		Omnibus fare from boat to hotel	.25
	12.	Dinner and horse feed at Arcola	.80
		Hunt & Green, livery bill, vou. 12	4.00
	14.	St. Charles Hotel bill, vou 13	9.00
		Dinner and horse feed at Glenallen	.75
	15.	J. P. Hall, hotel bill, vou. 14	3.00
		Dinner and horse feed at Richardson	.75
	16.	Hunt & Green, livery bill, vou. 15	10.00
		St. Charles Hotel bill, vou. 16	3.00
		Omnibus from hotel to depot	.25
		Railroad fare from Greenville to Vicksburg	2.80
	17.	Omnibus fare from depot to hotel	.25
	18.	Washington Hotel bill, vou. 17	4.00
		Omnibus from hotel to depot	.25
		Railroad fare from Vicksburg to New Orleans	6.80
		Dinner at Wilson's Railroad House	.75
		Omnibus from depot to hotel	.50
		Supper at Gem Restaurant	.75
	19.	Breakfast at Gem Restaurant	.50
		Dinner at Gem Restaurant	.75
		Supper at Gem Restaurant	.60
	20.	Breakfast at Gem Restaurant	.65
		Dinner at Gem Restaurant	.60
		Supper at Gem Restaurant	.65
	21.	Breakfast at Gem Restaurant	.60
		Central Hotel, room, vou. 18	6.00
		Omnibus from hotel to Depot	.50
		Railroad fare from New Orleans to Alexandria, La	6.95
		Dinner at Baton Rouge Junction	.75
		Omnibus from depot to hotel	.25
	22.	Dinner and horse feed at Ferriss' Store	.80
	23.	Nelson Taylor, livery bill, vou. 19	4.00
		Exchange Hotel bill, vou. 20	5.50
		Omnibus from hotel to depot	.25
		Railroad fare, Alexandria to Bunkie	1.80
		Dinner at Bunkie's Restaurant	.75
		Supper at Evergreen	.60
	24.	Lodging at W. Fort's, vou. 20½	.50
	25.	Breakfast at Big Cane	.50
		Dinner at Evergreen	.50
		G. H. Stevens, livery and hotel bill, vou. 21	6.00
		Railroad fare from Bunkie to Alexandria	1.80
	26.	Omnibus from depot to hotel	.25
		Exchange Hotel bill, vou. 22	1.50
		Omnibus from hotel to depot	.25
		Railroad fare, Alexandria to Shreveport	5.30
		Supper at Boyce Railroad House	.50

1889.		Enos Richmond—Continued.		
Nov.	26.	Omnibus from depot to hotel	$0.25	
	29.	City Hotel bill, vou. 23	6.00	
		Omnibus from hotel to depot	.25	
		Railroad fare from Shreveport to Arkadelphia	6.10	
		Dinner at Texarkana	.50	
		Omnibus from depot to hotel	.25	
		Supper at Lee Restaurant	.50	
	30.	Lodging at Lee Restaurant, vou. 24	.50	
		Omnibus from restaurant to depot	.25	
		Railroad fare, Arkadelphia to Shreveport	6.10	
		Breakfast at Texarkana	.50	
		Dinner at Marshall, Tex	.75	
		Supper at Marshall, Tex	.50	
		Jurat fee	.25	
				$515.30

[This is to certify that I was engaged in investigating a cotton claim for the Department of Justice, and hunting up evidence for the Government, and that the transportation by teams charged for in this account were necessary for the public service, and that there was no public conveyance to the points visited.—Enos Richmond.]

		Enos Richmond:		
Dec.	31.	For services as special agent from the 1st day of December, 1888, to the 31st day of December, 1888, dates inclusive, 31 days, at $10 per day	310.00	
		For expenses actually and necessarily incurred, as per following statement:		
	2.	City hotel bill, vou. 1	3.00	
		Omnibus from hotel to depot	.25	
		Railroad fare from Shreveport to Delhi, La.	4.00	
		Dinner at Delhi Railroad House	.50	
	3.	J. T. Mason, hotel bill, vou. 2	2.00	
		Cason Johnson, livery bill, vou. 3	4.50	
		Railroad fare, Delhi to Vicksburg	1.65	
		Omnibus from depot to hotel	.25	
	7.	Boat fare from Vicksburg to Delta and back	.50	
	8.	Railroad fare from Vicksburg to Edwards and return	1.08	
	10.	Steam-boat fare from Vicksburg to Ilen and Kellogg's and return	4.00	
		R. H. Iler, livery bill, vou. 4	1.00	
	11.	Washington Hotel bill, vou. 5	21.00	
	15.	Washington Hotel bill, vou. 6	12.00	
		Omnibus from hotel to depot	.25	
		Railroad fare from Vicksburg to Greenville, Miss.	2.80	
		Dinner at Leland Railroad House	.75	
		Omnibus from depot to hotel	.25	
	19.	Omnibus from hotel to depot	.25	
		Railroad fare from Greenville to Glenallen and return	1.80	
		Supper at Railroad House	.50	
		Lodging at Railroad House, vou. 6½	.50	
		Breakfast at Irwin Station	.50	
		St. Charles Hotel bill, vou. 7	12.50	
		Omnibus from hotel to depot	.25	
		Railroad fare from Greenville to Vicksburg	2.80	
	29.	Washington Hotel bill, vou. 8	26.45	
		Railroad fare from Vicksburg to Greenville	2.80	
	30.	Breakfast at Leland Railroad House	.75	
		Jurat fee	.25	
				419.13

[This is to certify that I was engaged in investigating a cotton claim for the Department of Justice and hunting up evidence for the Government, and that the transportation by teams charged for in this account was necessary for the public service, and that there was no public conveyance to the points visited.—Enos Richmond.]

1889.		Enos Richmond:		
Feb.	5.	For services as special agent from the 1st day of January, 1889, to the 5th day of February, 1889, dates inclusive, 36 days, at $10 per day	360.00	
		For expenses actually and necessarily incurred, as per following statement:		
Jan.	1.	St. Charles Hotel bill, vou. 1	6.00	
		Steam-boat fare from Greenville to Grand Lake, Ark	2.00	
	3.	R. P. Poole, hotel bill, vou. 2	2.25	
	4.	J. E. Moore, hotel bill, vou. 3	2.50	
	7.	Ford & Co., livery bill, vou. 4	3.50	
	12.	C. Owen, services as per receipts, vou. 5	3.00	
	13.	John Haley, livery bill, vou. 6	1.00	
		H. F. Holt, services as per receipt, vou. 7	7.50	
	14.	W. T. Owen, services as per receipt, vou. 8	3.00	
	15.	Ford & Co., livery bill, vou. 9	3.50	
	16.	M. C. Cooper, services as per receipt, vou. 10	20.00	
	18.	Jacob Owen, hotel bill, vou. 11	2.50	
	21.	George W. Mooney, livery bill, vou. 12	16.00	
	22.	Ford & Co., livery bill, vou. 13	9.50	
		Ferriage of team over bayou, Macon	.40	
	25.	E. P. Williams, services as per receipt, vou. 14	.50	
	28.	Steam-boat fare from Grand Lake to Leota and back	2.00	
		Telephone and telegraph messages, vou. 15	1.30	
		Dinner at J. P. Hall's, Leota	.50	
	30.	John S. Haley, livery bill, vou. 16	18.50	
		George W. Mooney, services as per receipt, vou. 17	1.50	
		G. M. Christian, hotel bill, vou. 18	37.50	
		Fare from hotel to steam-boat	.25	
	31.	Railroad fare from Grand Lake to Greenville	2.00	
		Dinner at restaurant	.45	
		Supper at Washington House	.50	
		Railroad fare from Greenville to Vicksburgh	2.80	
Feb.	1.	Washington Hotel bill, vou. 19	2.00	
		Railroad fare from Vicksburgh to Canton, Miss	2.00	
	3.	European Hotel, vou. 20	3.50	
		Railroad fair from Canton to Jackson	.70	
		Supper at railroad restaurant	.35	
		Railroad fare from Jackson to Washington, D. C	26.50	
		Sleeper to Atlanta	2.50	
	4.	Breakfast at Birmingham	.60	
		Dinner at Oxiana	.50	
		Supper at Atlanta	.50	
		Sleeper from Atlanta to Washington	3.50	
	5.	Breakfast at Danville	.70	
		Dinner at Charlottesville	.75	
		Jurat fee	.25	
				554.85

[This is to certify that I was engaged in investigating a cotton claim for the Department of Justice, and hunting up evidence for the Government, and that the transportation by teams charged for in this account was necessary for the public service, and that there was no public conveyance to the points visited.—Enos Richmond.]

1888.		Alex. R. Hagner:		
		For services as United States commissioner in behalf of the United States at Hagerstown, Md., on the 27th of November, in 1888, taking depositions in the case of David R. Miller *vs.* The United States, No. 1266, Congressional Court of Claims.		
Nov.	27.	One day, to wit, Nov. 27, 1888, at $3 per day	3.00	
		Folios (by actual count) of 100 words, at 15 cents per folio, 13	1.95	
				4.95

1888.		Goode & Cravens:		
Nov.	22.	For services as special attorney on the 21st and 22d days of November, 1888, 2 days at $10 per day		$20.00
		[For expenses actually and necessarily incurred, as per following statement: We attended to the taking of depositions in the case of John Robinson *vs.* United States, No. 3381, as counsel for the United States for 2 days, at the request of Robert A. Howard, assistant United States Attorney-General. We do not remember the dates.]		
		John Courtney, jr.:		
		For services as special assistant attorney from the 7th day of Feb., 1889, to the 25th day of Feb., 1889, dates inclusive, 19 days at $15 per day		$285.00
		For expenses actually and necessarily incurred, as per following statement:		
1889.				
Feb.	7.	Breakfast, dinner, and supper at Syracuse, N. Y., 75 cents each	2.25	
		Railroad fare, Syracuse, N. Y., to New York	6.00	
		Sleeper	1.50	
		Necessary porterage	.25	
	8.	Breakfast and dinner in New York, $1 each	2.00	
		Railroad fare, New York to Washington	6.50	
		Drawing-room car	1.25	
		Necessary porterage	.25	
		Supper at Philadelphia	.75	
	9.	Breakfast, dinner, and supper, 75 cents each	2.25	
	10.	Breakfast, dinner, and supper, 75 cents each	2.25	
	11.	Railroad fare, Washington to Atlanta, Ga	17.50	
		Sleeper, Washington to Atlanta, Ga	4.50	
	13.	Four meals, Washington to Atlanta, Ga., 75 cents each	3.00	
		Necessary portage	.25	
	24.	Board and lodging, Atlanta, Ga., 2½ days, vou. 1	25.75	
		Breakfast at Atlanta, Ga	.75	
		Railroad fare, Atlanta, Ga., to Washington	17.50	
		Sleeper, Atlanta, Ga., to Washington	4.00	
		Necessary porterage	.25	
	25.	Three meals, Atlanta to Washington, 75 cents each	2.25	
		Dinner and supper, 75 cents each	1.50	
		Jurat	.25	
				387.75
		[Services rendered in Congressional cases in Atlanta, Ga., Nos. 3334, 3346, 3518, 3533, 3536, 3764, 4136, 3693, 5695, 6576, 6578, 6580, 6581, 6582, 6583, 6588, 6577, 6579; in Marietta, Ga., No. 4670.]		
1888, '89.		William C. McIntire:		
Feb.	26.	For services as patent expert between the 10th day of Dec., 1888, and the 26th day of Feb., 1889, 16½ days, at $25 per day		404.16
		For expenses actually and necessarily incurred, as per following statement:		
1888.				
Dec.	10.	1 day, McAleer case	25.00	
	11.	1 day, Berdan case	25.00	
	13.	1 day, Berdan case	25.00	
	14.	1 day, Berdan case	25.00	
	18.	1 day, Berdan case	25.00	
1889.				
Jan.	7.	½ day, Berdan case	12.50	
	11.	½ day, Berdan case	12.50	
	12.	1 day, Berdan case	25.00	
	14.	½ day, Berdan case	12.50	
	16.	⅙ day, Berdan case	4.16	
Feb.	15.	½ day, Berdan case	12.50	
	16.	1 day, Berdan case	25.00	
	18.	1 day, Berdan case	25.00	
	19.	1 day, Berdan case	25.00	

1889.		William C. McIntire—Continued.		
Feb.	20.	1 day, Berdan case	$25.00	
	21.	1 day, Berdan case	25.00	
	22.	1 day, Berdan case	25.00	
	23.	1 day, Berdan case	25.00	
	25.	½ day, Berdan case	12.50	
	26.	½ day, Berdan case	12.50	
				$404.16
		William I. Hill:		
		For expenses actually and necessarily incurred, as per following statement:		
Mar.	2.	Railroad fare, Washington to Culpeper, Va., and return	3.50	
		Hotel bill, one. 1	1.50	
		Jurat	.25	
				5.25
		[In Court Claims case, No. 6671, Farrish *v.* United States.]		
		J. W. Haley:		
Jan.	4.	Services one day, to wit, as a notary public in behalf of the United States, at Grand Lake, Chicot County, Ark., on the 4th day of Jan., 1889, in taking depositions in the case of Florine A. Austin, administratrix, etc, *v.* the United States, No. 13843, Court of Claims, at $3 per day	3.00	
		722 folios (by actual count) of 100 words, at 15 cents per folio	108.30	
				111.30
1888.		Jo. A. Walden:		
		For services as special attorney between the 20th day of Nov., 1888, and the 18th day of Feb., 1889, 18 days, at $10 per day	180.00	
		For expenses actually and necessarily incurred, as per following statement:		
		Railroad fare from Leesburgh to Valley Head	2.25	
		Railroad fare from Valley Head to Leesburgh	2.25	
		Hack-hire and ferriage, Center to Leesburgh	*1.25	
		Hack-hire and ferriage, Leesburgh to Center	*1.25	
		Dinner at Attalla	.75	
		Dinner at Attalla	.75	
			188.50	
		By disallowance as above	2.50	
				186.00

[List of cases and dates of taking testimony are as follows: Nov. 20, 1888, Geo. Weston *v.* United States, 1 day, $10; Nov. 22, 1888, Matilda Underwood *v.* United States, 1 day, $10; Dec. 3, 1888, W. B. Starling *vs.* United States, 1 day, No. 5711, $10; Dec. 31, 1888, W. B. Starling *vs.* United States 1 day, No. 5711, $10; Dec. 26, 1888, Geo. Hendrix *vs.* United States, No. 542, 1 day, $10; Dec. 4, 1888, Jno. C. Scroggin, *vs.* United States, No. 5712, 1 day, $10; Dec. 6, 1888, Sarah C. McConnell *vs.* United States, No. 5642, 1 day, $10; Jan. 1, 1889, R. P. Biggers *vs.* United States, No. 5719, 1 day, and Rosa Brooks *vs.* United States, No. 5744, 1 day, $10; Jan. 2, 1889, Martin Redden *vs.* United States, No. 5658, and Susan Wilson *vs.* United States, No. 5643, 1 day, $10; Jan. 13, 1889, Jno. Bishop *vs.* United States, No. 5256, 1 day, $10; Jan. 14, 1889, W. B. Taylor, *vs.* United States, No. 5793, and Jan. 15, 1889, W. B. Taylor, administrator, *vs.* United States, No. 5792; Jan. 16, 1889, W. B. Taylor, administrator, traveling and taking evidence, Jan. 17, 1889, W. B. Taylor, administrator, traveling and taking evience, 4 days, $40; Jan. 18, 1889, Mordecai Tipton *vs.* United States, No. 5830, 1 day, $10; Josh L. Bellote *vs.* United States, 1 day, $10; Jan. 25, 1889, Caroline Pollard *vs.* United States, No. 5721, 1 day, $10; Isaac Boring *vs.* United States, No. 5717; Feb. 18, 1889, Hartwell Vaughn *vs.* United States, No. 5714, 1 day, $10.]

*Disallowed, as no subvouchers are furnished.

J. K. P. Palmer:
For expenses actually and necessarily incurred, as per following statement:

1888.				
Dec.	21-22.	Horse-hire for 2 days, going to Beach and return	$2.50	
	26.	Horse-hire for 1 day, going to Hillsboro and return	1.25	
		Jurat	.25	
				$4.00

[The above expense was necessary, there being no public conveyance to either of the places mentioned. Mary Powell *vs.* United States, Congressional, No. 1227.]

Lathrop, Smith & Morrow:

1889.				
Feb.	15.	For services as attorney for the United States on the 15th day of Feb., 1889, and the 2d day of Feb., 1889, 2 days, at $10 per day		20.00

[Robinson *vs.* United States, No. 3381; Withers *vs.* United States, No. 3385.]

George W. Much:
For expenses actually and necessarily incurred as per following statement: As a witness in behalf of the United States in the case of David Myerle, executor, etc., of Phineas Burgess, deceased, Nos. 14547, 14548, *vs.* the United States:

1888.				
Dec.	7.	Railroad fare, Philadelphia to New York and return	$4.00	
		Two meals in New York, at $1 each	2.00	
		Lodging in New York, one night	1.50	
	8.	Three meals in New York, at $1 each	3.00	
	10.	Railroad fare, New York to Philadelphia and return	4.00	
		Three meals in New York, at $1 each	3.00	
		Notary's fee	.25	
				17.75

Clarence A. Brandenburg:
For services as commissioner of the Court of Claims in behalf of the United States, at Washington, D. C., on the 13th day of Feb., 1889, in taking depositions *vs.* The United States, No. 16236, Court of Claims.

1889.				
Feb.	13.	One day, to wit, Feb. 13, 1889, at $3 per day	3.00	
		11 3/10 folios (by actual count) of 100 words, at 15 cents per folio	1.69	
		11 3/10 additional as stenographer, 10 cents per folio	1.13	
				5.82

William I. Hill:

Mar.	5.	For expenses actually and necessarily incurred, as per following statement, in the taking of depositions in the following Bowman Act Cases *vs.* The United States, as per the vouchers attached:		
		Railroad fare to Richmond	3.85	
		Supper en route	.40	
		Cab hire	.25	
	6.	Hotel bill, per voucher	2.50	
		Railroad fare to Petersburgh	1.00	
		Supper	.75	
		Cab hire	.15	
	8.	Hotel bill, per voucher	6.50	
		Railrod fare to Norfolk	2.50	
		Cab hire	.25	
	9.	Hotel bill, per voucher	2.25	
		Boat fare to Hampton	.50	
	10.	Hotel bill, per voucher	1.75	
		Railroad fare, Hampton to Lee Hall	.75	
		Cab hire to Williamsburgh	1.25	
		Dinner	1.00	
		Cab hire to station	.25	
	11.	Railroad fare to Washington	5.85	
		Supper en route	.75	
		Jurat	.25	
				32.75

T. J. Shelton, jr.:

For services and necessary expenses incurred as United States commissioner, in behalf of the United States, at Memphis, Shelby County, Tenn., on the 9th day of January, 1889, in taking depositions in the cases of Amos Woodruff and W. A. Bickford *vs.* The United States, Nos. 3591 and 3588, Court of Claims:

1889.
Jan. 9. To 1 day, to wit, in each case, taking depositions of J. P. Prescott and B. K. Pullen for the defendants, at $3 per day each case.....
8,016 folios (by actual count) of 100 words, at 15 cents per folio.....
Additional as stenographer, 10 cents per folio.....

William C. McIntire:

For services as patent expert from Mar. 5 to 7, 1889, dates inclusive, 3 days, at $25 per day; Mar. 5, to 1 day Berdan case, $25; Mar. 6, to 1 day Berdan case, $25; Mar. 7, to 1 day Berdan case $25.....

Julius H. Seymour:

For services as United States commissioner, in behalf of the United States, at 35 Wall street, New York City, on the 4th day of February, 1889, in taking depositions in the case of John C. Guy *vs.* The United States, No. 14748, Court of Claims:

Feb. 4. 1 day, to wit, Feb. 4, 1889, at $3 per day.....
18 folios (by actual count) of 100 words, at 15 cents per folio.....
18 additional, as stenographer, at 10 cents per folio.....

1888–89. Frank K. Winchester:

Jan. 2. For services as special attorney on the 27th day of Dec., 1888, and the 2d day of Jan., 1889, 2 days, at $10 per day.....
[1 day's service in cross-examining witnesses in case of Annie E. Smith *vs.* The United States, No. 872, Congressional, Dec. 27, 1888, to January 2, 1889, to similar service].

James V. Chilton:

For services as notary public, in behalf of the United States, at Warrenton, Va., on the 7th day of Dec., 1888, in taking depositions in the case of Edmunds, administrator, *vs.* The United States, No. 4647, Court of Claims.

1888.
Dec. 7. 1 day, to wit, at $3 per day.....
13½ folios (by actual count) of 100 words, at 15 cents per folio.....

To summoning witnesses and notifying claimant in the county (disallowed*).....

1889. Enos Richmond:

Apr. 3. For services as special agent from Mar. 23, 1889, to Apr. 3, 1889, dates inclusive, 8 days, at $5 per day.....
For expenses actually and necessarily incurred, as per following statement:

Mar. 27. Railroad fare, Elmer, N. J., to Washington, D. C.....
Hotel bill, Howard House, Washington, D. C.....
Railroad fare, Washington, D. C., to Elmer, N. J.....
Jurat to account, Apr. 3.....

Edwin Forrest:

For services as United States commissioner in behalf of the United States, at the city of Washington, D. C., on the 1, 2, 5, 6, 7, 15, and 29 days of Mar., 1889, in taking depositions in the case of the Berdan Arms Man. Co. *vs.* The United States, No. 15726, Court of Claims, Mar. 1, 2, 5, 6, 7, 15, and 29:
1 day's attendance, at $3 per day.....

* This item can not be allowed in this form.

1889.				
		Edwin Forest—Continued.		
Mar.	27.	310 folios (by actual count), of 100 words at 15 cents per folio	$46.50	
		310 additional as stenographer, 10 cents per folio	31.00	
				$80.50
		William C. McIntire:		
Apr.	1.	For services as patent expert, between the 25th day of March, 1889, and the 1st day of April, 1889, 5 days, at $25 per day		125.00
		Clarence A. Brandenberg:		
		For services as United States commissioner, in behalf of the United States, at Washington, D. C., commencing on the 28th day of March, 1889, in taking depositions in the case of Florine A. Austin, administrator, *vs.* The United States, No. 14843, Court of Claims:		
Mar.	28.	1 day, to wit, March 28, at $3 per day	3.00	
		735.8 folios (by actual count) of 100 words, at 15 cents per folio	110.37	
		735.8 additional as stenographer, at 10 cents per folio	73.58	
		579.80 folios copying, at 6 cents per folio of 100 words	34.78	
				221.73
		Lewis Cochran:		
Apr.	12.	Cab to station	.50	
		Railroad fare to New York	6.50	
		Sleeping-car berth	2.00	
	13.	Cab, station to hotel, New York	1.00	
		Breakfast, dinner, supper, $1 each	3.00	
		Hotel bill, vou.—reduced	2.00	
	14.	Breakfast, 90 cents; dinner, $1; supper en route, $1	2.90	
		Cab, hotel to station, New York	1.00	
		Railroad fare, limited express	8.35	
		Cab, station to residence, Washington	.50	
	15.	Jurat	.25	
				28.00
		Above expenses were incurred in case of Daniel Shea *vs.* The United States, No. 16145.		
		Edwin E. Bryant:		
Apr.	17.	For services as special attorney in preparing and arguing case of George K. Otis *vs.* The United States, No. 15603, Court of Claims		50.00
		Felix Brannigan:		
Mar.	19.	Cab to railroad station, Washington, D. C., self and baggage	.50	
		Railroad fare to New York City and return	10.00	
		Berth in sleeping-car	2.00	
	20.	Sleeping-car porter, 25 cents; cab to hotel, New York	1.00	
		Meals, 3, at $1	3.00	
		Hack hire, Government business	3.00	
	21.	Hack hire, Government business	2.50	
		Meals, 3 at $1	3.00	
		Express charges on package to General Casey, U. S. Army, Washington, vou. 1	.50	
	22.	Meals, 3 at $1	3.00	
		Room 3 days, at $1 per day, fire 75 cents, vous. 2 and 3	6.75	
		Cab to ferry New York, self and baggage	1.00	
		Sleeping-car berth, New York to Washington, D. C	2.00	
	23.	Porter sleeping-car, 25 cents; cab from railroad depot, self and baggage, 50 cents	.75	
		Notary's fee for jurat in this account	.25	
				39.25
		[Foregoing expenses were incurred in the case of Southmeyer & Peleg *v.* The United States, No. 15432 in the Court of Claims.]		

1889.		William I. Hill:		
		For expenses actually and necessarily incurred as per following statement: To taking depositions in Congressional cases Nos. 4514, 3883, 4017, 4034, etc., at Savannah, Ga.:		
Apr.	17.	To railroad fare and sleeper from Washington to Savannah	$22.00	
		Two meals en route	1.50	
		Cab hire	.25	
	23.	Hotel bill, per receipt	29.00	
		Railroad fare from Savannah to Washington	17.50	
		Two meals en route	1.50	
		Cab hire	.50	
		Probate	.25	
				$72.50
		J. G. White:		
May	14.	For services as special counsel between the 7th day of March, 1889, and the 14th day of March, 1889, 4 days, at $2.50 per day		10.00
		[Osborne v. United States, No. 37, Congressional. March 7. Testimony of R. W. Burghens, for plaintiff. March 8. Testimony of John Clements, for plaintiff. March 12. Testimony of Nelson Taylor for plaintiff. March 14. Testimony of Jacob Irving for plaintiff. I attended as counsel for the United States on the days above set forth, when the witnesses named were examined on behalf of claimant.]		
		A. M. Watson:		
Apr.	2.	For services as special attorney between the 26th day of March, 1889, and the 2d day of April, 1889, 5 days, at $10 per day		50.00
		Gibson v. United States No. 15769.]		
		A. W. Anthony:		
	19.	For services as special attorney from the 18th day of April, 1889, to the 19th day of April, 1889, dates inclusive, 2 days, at $10 per day		20.00
		[Staples v. United States, Congressional No. 3317.]		
		J. C. Wickliff:		
Mar.	1.	For services as special counsel, on the 28th day of February, 1889, and the 1st day of March, 1889, two days, at $10 per day		20.00
		[Feb. 28. For attending and cross-examining Alfred L. Shortwell, in case of Briggs v. The United States. No. 16262. March 1. For attending and cross-examining R. T. Durrett, in case of Briggs v. The United States, as per letter of Hon. Robert A. Howard, Assistant Attorney-General. See letter dated December 13, 1888.]		
		Wm. C. McIntire:		
May	4.	For services as patent expert from the 2d day of May, 1889, to the 4th day of May, 1889, dates inclusive, 3 days at $50 per day. At New York City, in the matter of Polydore S. Thompson v. The United States, No. 16611, in the court of claims		150.00
		Robert L. Miller:		
		For services as stenographer and United States commissioner in behalf of the United States, at Department of Justice, Washington, D. C., on the 4th and 6th days of May, 1889, in taking depositions in the case of Philip McAleer v. The United States, Nos. 13376 and 16383, consolidated, Court of Claims:		
	4, 6.	Services: 1 day, to wit, May 4, 1889, at $3 per day	3.00	
		142 folios (by actual count) of 100 words, at 15 cents per folio	21.30	
		Additional as stenographer, 10 cents per folio	14.20	
				38.50

1889.		J. M. Anderson:		
Mar.	29.	For services as attorney between the 7th day of March, 1889, and the 29th day of March, 1889, 18 days, at $10 per day, and for actual and necessary expenses incurred as per following statement:		
	7.	M. W. Mayfield *v.* United States, Congressional No. 4429 Jane Hanur *v.* United States, Congressional No. 4428	$10.00	
	9.	John J. Wheny *v.* United States, Congressional No. 1888	10.00	
	12.	Sarah Wright *v.* United States, Congressional No. 1896	10.00	
	13.	——— Page *v.* United States, Congressional No. 3326	10.00	
	14.	——— Patton *v.* United States, Congressional No. 3362	10.00	
	15.	Wade, adm. A. J. Duncan, *v.* United States, Congressional (have lost No.)	10.00	
	16.	Matilda O'Neal *v.* United States, Congressional No. 2932	10.00	
	18.	William Edwinston *v.* United States, Congressional No. 2171	10.00	
	19.	B. F. Roberts *v.* United States, Congressional No. 2424	10.00	
	20.	J. J. Wheney *v.* United States, Congressional No. 1818, Wade, administrator of Duncan, *v.* United States	10.00	
	21.	H. H. T. Carter *v.* United States, Congressional No. 2109	10.00	
	22.	Luckett Davis *v.* United States, Congressional No. 2055	10.00	
	23.	B. F. Owen *v.* United States, Congressional No. 3389	10.00	
	25.	H. H. T. Carter *v.* United States, Congressional No. 2109	10.00	
	26, 27.	C. Hoffsettler *v.* United States, Congressional No. 2187	20.00	
	28.	B. F. Roberts *v.* United States, Congressional No. 2424; H. H. T. Carter *v.* United States, Congressional No. 2109	10.00	
	29.	S. S. Knight *v.* United States, Congressional No. 1419	10.00	
		Expenses to Franklin, Tenn., in Roberts case, railroad fare, $1.60; hotel (meals), $1	2.60	
		Expenses to Smyrna, in Davis case, railroad fare, $1.30; hotel (meals), $1	2.30	
				$184.90
		John G. B. Simms:		
May	8.	For services as attorney at law on the 23d day of April, 1889, and the 24th day of April, 1889, 2 days, at $10 per day	20.00	
		Expenses actually and necessarily incurred, as per following statement:		
		Cash paid hotel bill in Greenville, voucher	3.00	
		Cash paid passage to Greenville and return	3.35	
				26.35
		[The above services were rendered in cross-examination of Government witnesses, introduced by claimant in Briggs *v.* United States, No. 16262.]		
		F. H. Busbee:		
Jan.	16.	For services as attorney and cross-examiner on the 10th day of October, 1888, and the 16th day of January, 1889, 2 days, at $10 per day		20.00
		[No. 2214 Congressional, F.P. Haywood, jr., and Minnie Bagley *v.* The United States: For services rendered on appearance at the deposition and cross-examination of the witnesses introduced for the claimants, E. E. Lane and F. P. Haywood, October 10, 1888, before T. R. Purnell, commissioner, Raleigh, N. C., No. 2144 Congressional. F. P. Haywood *v.* The United States: For services rendered in appearance at the taking of the deposition and cross-examination of the witnesses introduced for the claimants, F. P. Haywood and J. F. Taylor. January 16, 1889, before T. R. Purnell, commissioner, Raleigh, N. C.]		
		Lewis Cochran:		
		For expenses actually and necessarily incurred, as per following statement:		
May	17.	Cab to station (Washington), railroad fare, Washington to Philadelphia	4.00	

1889.				
		Lewis Cochran—Continued.		
May	17.	Seat in parlor-car	$0.75	
		Cab to hotel, Philadelphia	.50	
	18.	Hotel bill, vou	5.00	
		Cab from hotel to railroad station	.50	
		Railroad fare, Philadelphia to Washington	4.00	
		Seat in parlor-car	.75	
		Supper, en route	1.00	
		Cab from station to residence, Washington	.50	
		Jurat	.25	
				$17.25
		[The foregoing expenses were incurred in two cases of Gilbert H. Ferris *vs.* United States, Nos. 12813 and 12814.]		
		George H. Ellis:		
Jan.	—.	For services as special attorney from the 21st day of Jan., 1889, to the 25th day of January, 1889, dates inclusive, 5 days, at $10 per day		50.00
		[C. T. Dunn *vs.* The United States, Congressional, No. 1906].		
		Tancred Betts:		
May	15.	For services as attorney on the 1st and 2d days of Apr., 1889, and the 13th, 14th, and 15th days of May, 1889, 5 days, at $10 per day		50.00
		[Hewlett *vs.* United States, Congressional, Nos. 602, 4607.]		
		S. A. Darnell:		
Apr.	19.	For services as special attorney between the 19th day of Apr., 1889, and the 10th day of May, 1889, 6 days, at $10 per day		60.00
		[Nichols *vs.* United States, Congressional, No. 744. Kries *vs.* United States, Congressional, No. 745. Miller *vs.* United States, Congressional, No. 1022. Rogers *vs.* United States, Congressional, No. 1024.]		
		William I. Hill:		
May	22.	For expenses actually and necessarily incurred, as per following statement:		
		To the taking of depositions in the following Congressional cases at Charlestown, W. Va. (Nos. 3894 to 610), etc.:		
		Railroad fare from Harper's Ferry and return	2.25	
		Railroad fare from Harper's Ferry to Charlestown and return	.70	
		Night's lodging and meals, per receipt	1.50	
		Cab hire	.25	
		Probate	.25	
				4.95
		Robert L. Miller:		
	23.	Services 1 day, to wit, May 23, at $3 per day	3.00	
May	23.	125 folios (by actual count) of 100 words, at 15 cents per folio	18.75	
		125 additional, as stenographer, 10 cents per folio	12.50	
				34.25
		Lewis Cochran:		
		For expenses actually and necessarily incurred, as per following statement:		
	26.	Cab to Pennsylvania depot	.50	
		Railroad fare from Washington to New York and return	10.00	
		Parlor-car	1.25	
		Dinner en route	1.00	
		Cab from station to hotel in New York	1.00	
		Supper, New York	.85	
	27.	Hotel bill, vou. 1	3.00	
		Breakfast	.80	
		Dinner	1.00	
		Cab from hotel to station	1.00	
		Parlor-car from New York to Washington	1.25	

1889.				
		Lewis Cochran—Continued.		
May	27.	Supper en route	$1.00	
		Cab from station to residence	.50	
		Jurat	.25	
				$23.40
		[The above expenses were incurred in suits pending in the Court of Claims, Daniel Shea *vs.* The United States, No. 16143.]		
		W. R. Francis:		
Feb.	19.	For services as attorney from the 19th day of Feb., 1889, to the 22d day of Feb., 1889, dates inclusive, four days, at $10 per day	40.00	
		For expenses actually and necessarily incurred, as per following statement:		
		To railroad fare on Louisville and Nashville Railroad from Decatur to Athens and return	.80	
		Hotel bill, as per voucher herewith filed, at Commercial Hotel, Athens, Ala., for four days, at $2 per day	8.00	
	26.	Services as attorney on Feb. 26, 1889, one day, at $10	10.00	
		Expenses actually and necessarily incurred, as per following statement:		
		Railroad fare on Louisville and Nashville Railroad from Decatur to Athens and return	.80	
		Hotel bill at Commercial Hotel, Athens, Ala., as per voucher herewith filed, at $2 per day	2.00	
Mar.	8.	Services as attorney on Mar. 8, 1889, one day, at $10 per day	10.00	
		Railroad fare on Louisville and Nashville Railroad from Decatur to Athens and return	.80	
	28.	Services as attorney on Mar. —, 1889, one day, at $10 per day	10.00	
		Railroad fare on Louisville and Nashville Railroad, Decatur to Harris Station, and return by Memphis and Charleston Railroad from Belle Mina to Decatur, 21 cents	.21	
Apr.	17.	To services as attorney from Apr. 17, 1889, to Apr. 18, 1889, dates inclusive, 2 days at $10 per day	20.00	
		Railroad fare on Louisville and Nashville Railroad, Decatur to Athens and return	.80	
				103.51
		C. H. Wood:		
May	7.	For services as special attorney on the 7th day of May, 1889, 1 day, at $10 per day		10.00
		[Expenses actually and necessarily incurred, as per following statement: Mrs. M. Pol, administratrix, *vs.* United States, Congressional, No. 4327.]		
		J. C. Briant:		
Feb.	28.	For services as attorney-at-law on the 8th, 9th, 11th, 12th, 13th, and 28th of February, 1889, 6 days, at $10 per day		60.00
		[For expenses actually and necessarily incurred, as per following statement. No expenses incurred. Martha G. Winder *vs.* United States, Congressional, No. 3314.]		
		Felix Brannigan:		
May	1.	Cab to railroad station	.50	
		Railroad fare, Washington, D. C., to New York and return	10.00	
		Berth in sleeping-car	2.00	
	2.	Porter on sleeping-car	.25	
		Baggage to hotel, New York	.50	
		Meals, New York	3.00	
	3.	Meals, New York	3.00	
	4.	Meals, New York	3.00	
		Von. 1, room, 2 days, at $2, New York	4.00	
		Cab to ferry, self and baggage	1.00	
		Sleeping-car berth to Washington, D. C	2.00	

1889.				
		Felix Brannigan—Continued.		
May	5.	Porter on sleeping-car, 25 cents; cab, Washington, D. C., 50 cents	$0.75	
		Notary's fee for jurat	.25	
				$30.25
		[The above charged expenses were incurred in the following cases pending in the Court of Claims, viz: Polydore Thomson *vs.* The United States, No. 16611; John H. Hamiter *vs.* The United States, No. 321, Congressional.]		
		John McBrooks:		
Apr.	5.	For services as attorney representing the United States, on the 5th day of Apr., 1889, 1 day, at $10 per day		10.00
		[For taking depositions of Edson B. Hart, witness for the claimant, at Memphis, Tenn., Apr. 5, 1889, in the case of Augustus P. Burdette *v.* The U. S., Congressional case, No. 348.]		
		Edwin Forrest:		
May	15.	For services rendered as stenographer in taking from dictation brief of Lewis Cochran, esq., assistant attorney for the United States in the case of Alfred Pasquean *v.* The United States, No. 14765, Court of Claims, 40 folios, at		10.00
		Marion Erwin:		
	28.	For services as special attorney, on the 16th and 17th days of May, 1889, three days, at $10 per day		30.00
		[The same being for special services rendered the United States as attorney in the examination of witnesses before Lewin M. Erwin, United States commissioner at Macon, Ga., in the case of Estate of J. H. R. Washington *v.* The United States, No. 65, pending in the Court of Claims on the following days, to wit: May 16, 17, 28, 1889.]		
		J. M. Anderson:		
June	8.	For services as attorney between the 4th day of April, 1889, and the 8th day of June, 1889, 13 days, at $10 per day, and for expenses actually incurred, as per following statement:		
Apr.	4.	A. J. Drumright *v.* The United States, No. 5168	10.00	
		Expenses in above case—proof taken at Murfresborough, were railroad fare to Murfreesborough and back	2.00	
		Hotel fare Murfreesborough (dinner)	1.00	
	5.	G. W. House *v.* United States Government, No. 2115	10.00	
	6.	Jackson Tyler *v.* United States Government, No. 2185	10.00	
	26.	H. S. French *v.* United States Government, No. 2295	10.00	
	29.	John J. McEwin, *v.* United States Government, No. 2188	10.00	
May	3.	P. T. Roscoe *v*, United States Government, No. 4425	10.00	
		Expenses in above case—proofs taken at Goodlettsville—were railroad fare to Goodlettsville and return	.80	
		Hotel fare (dinner)	1.00	
	6.	James J. Ward *v.* United States Government, No. 4498	10.00	
		Expenses in above case—proof taken at Smyrna—were railroad fare to Smyrna and return	1.30	
		Hotel fare (dinner)	1.00	
	7.	Nelson Mullins *v.* United States Government, No. 5324	10.00	
	18.	L. A. Baker *v.* United States Government, No. 5029	10.00	
	28.	John Beal *v.* United States Government, No. 5030	10.00	
June	1.	John Wright *v.* United States Government, No. 5028	10.00	
	5.	Ann V. Brown *v.* United States Government, No. 6068	10.00	
May	29.	Samuel S. Eaton *v.* United States Government, No. 1839	10.00	
				137.10

1889. S. C. McCandless:
For services and necessary expenses incurred as United States commissioner in behalf of the United States at Pittsburgh, Pa., on the 2d of April, 1889, in taking depositions in the case of Margaret M. Gibson *vs.* The United States, No. 15769, Court of Claims:

Apr.	2.	One day's service, to wit: taking the testimony of Herbert Kleimman on part of the United States, at $3 per day	$3.00	
		6 folios (by actual count) of 100 words, at 15 cents per folio	.90	
		Mileage of witness from Neville Island to Pittsburgh and return, 10 miles direct, at 5 cents per mile each way	1.00	
		Attendance of witness 1 day, Herbert Kleimman, on April 2, 1889, at $1.50 per day	1.50	
				$6.40

EXHIBIT F 6.—DEFENDING SUITS IN CLAIMS AGAINST THE DISTRICT OF COLUMBIA.

1889. J. H. Robinson:

May	1.	For services as skilled accountant and specialist in examination of records and procuring evidence to be used in the defense of suits now pending in the Court of Claims, viz: Nos. 33 and 34, Matthew J. Laughlin; No. 90, Neal T. Murray; No. 105, James Fitzpatrick *vs.* The District of Columbia, from April 1 to April 30, inclusive, 26 days, at $6 per day		156.00

Robert A. Howard:
For expenses actually and necessarily incurred, as per following statement:

	Transfer (Washington)	.50	
	Railroad fare to New York and return	12.35	
	Dinner on train	1.00	
	Porter	.25	
	Transfer (New York)	.45	
23.	Hotel	12.00	
	Transfer	.45	
	Sleeper, New York to Washington	2.00	
24.	Porter	.25	
	Baggage (Washington)	.25	
	Jurat	.25	
			29.75

[Fisher, assignee, *vs.* The District of Columbia, No. 46; New York Coal Tar Chemical Company *v.* The District of Columbia, No. 234; Tomkins Lime Company *v.* The District of Columbia, No. 235.

J. H. Robinson:

May	31.	For services rendered as expert accountant in examination of records and procuring testimony to be used in defense of suits now pending in the Court of Claims against the District of Columbia, viz: No. 241, Thomas Lucas *v.* District of Columbia; No. 90, Neal T. Murray *v.* District of Columbia; No. 292, Theodore Sheckles *v.* District of Columbia; Nos. 251, 252, Peter McNamara *v.* District of Columbia, from May 1 to May 31, inclusive, 27 days, at $6 per day		162.00

J. H. Robinson:

June	29.	For services as expert accountant and specialist in examination of records and procuring testimony to be used in defense of suits now pending in the Court of Claims, viz: No. 246, Thomas Fisher, assignee, *v.* District of Columbia; No. 105, James Fitzpatrick *v.* District of Columbia; No. 292, Theodore Sheckles *v.* District of Columbia, from 1st to 30th day of June, 1889, 25 days, at $6 per day		150.00

EXHIBIT F 7.—DEFENSE IN FRENCH SPOLIATION CLAIMS.

1888.			
	Charles W. Russell:		
July 2.	For expenses actually and necessarily incurred as per following statement, taking sixteen depositions in Alexandria, Va., in the case of Charles Selden, administrator of Isaac McPherson *vs.* The United States, and other French spoliation cases:		
May 10.	One round-trip fare, 25 cents; 1 meal, 75 cents	$1.00	
11.	One round-trip fare, 25 cents; 1 meal, 75 cents	1.00	
18.	One round-trip fare, 25 cents; 1 meal, 75 cents	1.00	
June 30.	One round-trip fare, 25 cents	.25	
	Taking three depositions in New York City in the case of Marion A. Caverly, administrator of John G. Clarke *vs.* The United States and other depositions in French spoliation cases:		
13.	One round-trip fare, $10; sleeper, $2	12.00	
14.	Hotel bill, room 1 day and 3 meals, vou	3.75	
	Lunch, 2, and 1 dinner	1.00	
	Jurat	.25	
			$20.25
	Benjamin Wilson:		
	For expenses actually and necessarily incurred as per following statement:		
1.	Car fare, Washington to Pittsburgh	9.00	
	Dinner on cars	.75	
	Supper	.50	
	Car fare, Pittsburgh to Washington	9.00	
	Breakfast and dinner	1.50	
	Jurat	.25	
			21.00
	Expenses were incurred in following cases: Andrew T. Bavin, trustee, *vs.* United States, No. 1275, French spoliation, pending in the Court of Claims:		
	F. P. Dewees:		
	For expenses actually and necessarily incurred as per following statement:		
July 10.	Railroad fare, Meriden to New York	1.85	
	Parlor car	.75	
11.	Three meals, $1, $1,75 cents	2.75	
	Street-car fare (official business)	.25	
	Telegram sent, vou. 1	.24	
	Telegram received, vou. 2	.35	
	Hotel bill, vou. 3	3.00	
12.	One meal	1.00	
	Transfer	1.00	
	Railroad fare to Washington	6.50	
	Parlor car	1.25	
	One meal	.45	
	Transfer	.25	
	Jurat	.25	
			18.89
	[The above expenses were incurred in taking depositions in French spoliation cases, Nos. 1032, 1033, and 1034, Scott, administratrix, *vs.* United States.]		
	Charles W. Russell:		
31.	For services rendered in translating, making legal examinations, preparations of facts, and taking depositions "to enable the Attorney-General to make proper defense for the United States in the matter of French spoliation cases * * * in his discretion," pursuant to an act making appropriation for sundry civil expenses, approved March 4, 1887, from July 1 to July 31, 1888, inclusive, at $2,000 per annum		168.50

1888.		John B. Goode:		
July	31.	For services rendered in keeping dockets, making legal examinations, and preparation of facts "to enable the Attorney-General to make proper defense for the United States in the matter of French spoliation cases * * * in his discretion," pursuant to an act making appropriation for sundry civil expenses, approved Mar. 4, 1887, from July 1 to July 31, 1888, inclusive, at $1,800 per annum		$151.60
		William L. Hill:		
		For expenses actually and necessarily incurred as per following statement:		
	23.	Railroad fare to Boston and 1 meal on train	$16.40	
		Boston to Kunnebunk, Me., and return	3.50	
		2 days' board at Kunnebunk, vou	4.00	
	28.	One week's board at Adam's House, vou	21.53	
		To Roxbury and back, railroad fare	.12	
		Carriage to hotel	.50	
				46.05
		[In the following cases, viz: Nos. 964, 1205, 1576, 1973, 3428, 3498, 3520, 3524, 3651, 3799, 3800, 4087, French spoliation claims].		
		William I. Hill:		
		For expenses actually and necessarily incurred, as per following statement: For hotel bill, traveling expenses, etc., incurred in taking depositions in French spoliation cases, from July 29 and including Aug. 9, 1888, as per vous. hereto attached, viz:		
Aug.	5.	For board and restaurant bill, vou. 1	23.30	
	9.	For board and restaurant bill, vou. 2	15.25	
		Railroad fare, Boston to Washington	11.50	
		Telegram sent to office, vou. 3	.43	
		Railroad fare to Roxbury from Boston	.28	
		Hack hire in Boston	1.00	
		Two meals whilst traveling in route	.90	
		Jurat	.25	
				52.91
		[In the following cases, viz: Nos. 1615, 1616, 1621, 1623, 1687, 2461, 2488, 3043, 3052, etc.]		
		Charles W. Russell:		
		For expenses actually and necessarily incurred as per following statement: Taking depositions in French spoliation cases of the *Eliza*, Odell, master; the *Thankful*, No. 3428; the *Una*, the *Monad*, Nos. 3799 3800, and other cases.		
July	21.	Railroad fare to Boston, $13; sleeper, $3; one meal, 45 cents	16.45	
		Carriage to hotel in Boston	.50	
	29.	Seven days' room and board, vou	21.53	
	25.	Railroad fare to Roxbury and return	.12	
	26.	Railroad fare to Lynn and return	.40	
	28.	Railroad fare to Plymouth and return	1.50	
		Carriage in Plymouth	.25	
		Dinner, vou	.85	
		Street-car fares, Boston	.20	
Aug.	9.	Room and board, Boston, to Aug. 9, room eleven days, board, twelve, vou	38.55	
		Carriage to train	.50	
		Fare Boston to Washington, $11.50; including meals, $1 and sleeping, $1	13.50	
		Jurat	.25	
				94.60
		Charles W. Russell:		
	31.	For services rendered in translating, making legal examinations, preparation of facts, and taking depositions "to enable the Attorney-General to make proper defense in the matter of French spoliation cases * * * in his discretion," pursuant to an act making appropriation for sundry civil expenses, approved March 4, 1887, from August 1 to August 31, 1888, less two days, at $2,000 per annum (twenty-nine days in all)		157.61

Benjamin Wilson:

For expenses actually and necessarily incurred per following statement, in going from Washington, D. C., to Boston and Salem, Mass.; to Portland and Brunswick, Me., and return, to attend the taking of depositions by claimants in various French spoliation cases pending in the Court of Claims (United States), and to cross-examine witnesses for the Government produced and examined by claimants:

1888.			
Aug.	19.	Baggage and self to depot	$0.20
		Ticket to Boston, Fall River Line	10.50
		Lunch	.25
		Dinner (late)	.90
		State-room on boat	2.00
	20.	Breakfast	.50
		Hack fare, self and baggage, Boston	.50
		Dinner	.75
		Hack to depot	.50
		Railroad fare to Portland	2.50
		Hack to hotel	.50
Aug.	23.	Hack fare, hotel to depot	.50
		Car fare to Brunswick and return	2.00
		Street-car fare, Portland	.06
	24.	Hotel bill, vou. 1	18.00
	25.	Hack to depot	.50
		Car fare to Salem	2.35
	27.	Ocean House, vou. 2	6.12
Sept.	1.	Hotel bill, vou. 3	9.50
		Baggage to depot	.25
		Car fare to Boston	.35
		Hack, self and baggage to hotel	.50
	2.	Hotel bill for room, vou. 4	2.00
		Restaurant, dinner and supper	1.00
	3.	Restaurant, breakfast and dinner	1.25
		Car fare, Washington	11.50
	4.	Coleman House, New York, room, vou. 5	2.00
		Restaurant, breakfast and dinner	1.25
		Hack fare to depot	1.50
		Lunch, Philadelphia	.60
		Street-car fare, Washington	.05
		Affidavit to this account	.25
			$80.63

John B. Goode:

For expenses actually and necessarily incurred, as per following statement, in attending the taking of depositions in French spoliation cases Nos. 1975, 245, 2316, 2653, 4595, 2338, 2341, 339, 2262, 1760, 3157:

Aug.	25.	Railroad fare from Washington to Lyme, Conn	8.85
		Car fare and baggage to depot	.30
		Parlor car, Washington to New York	1.25
		Dinner, $1; supper, 75 cents	1.75
	26.	Breakfast, 85 cents; dinner, $1; supper, 70 cents	2.55
	27.	Breakfast	.75
		Transportation baggage across New York	.50
		Parlor car, New York, New Haven and Hartford Railroad	1.00
		Dinner	.85
		Self and baggage from depot to hotel at Lyme	.50
	29.	Railroad fare from Lyme to New London and return	.90
		Bus fare going to and from depot in going to New London	.50
		Dinner at New London	1.00
	30.	Hotel bill at Lyme, Conn., vou. 1	8.50
		Self and baggage to depot	.50
		Railroad fare to Hartford, Conn	1.05
		Self and baggage from Hartford depot to hotel	.50
Sept.	3.	Hotel bill at Hartford, Conn., vou. 2	13.95
		Railroad fare to Washington	9.40
		Sleeping-car to Washington	3.00
	4.	Breakfast en route at Philadelphia	.65
		Baggage delivered, 25 cents, and car fare 5 cents	.30
	7.	Affidavit	.25
			58.80

1888. John B. Goode:

Aug. 31: For services rendered in keeping dockets, making legal examinations, preparation of facts and attending taking depositions "to enable the Attorney-General to make proper defense for the United States in the matter of French spoliation claims * * * in his discretion," pursuant to an act making appropriation for sundry civil expenses, approved March 4, 1887, from August 1 to August 31, 1888, at $1,800 per annum, exclusive of 2 days, 29 days' service, at $1,800 per annum $141.55

John N. Pike:

[For services as counsel between Dec. 9, 1887, and May 11, 1888, 10 days, at $10 per day 100.00

[The above fees were incurred in appearing and cross-examining witnesses called by claimants in the following cases as specified in the items charged, viz: Dec. 9, 1887, No. 955, brig *Ruby*—Bartlett, master; Dec. 21, 1887, No. 452, schooner *Sally*—Osgood, master; Dec. 26, 1887, No. 120, ship *Rose*—Chase, master; Jan. 6, 1888, No. 977, schooner *Industry*—Waite, master; No. 2503, brig *Atlantic*—Dalton, master; Feb. 1, 1888, No. 397, brig *Dove*—Goodhue, jr., master; No. 445, brig *Dove*—Tyler, master; Feb. 2, 1888, No. 423, brig *Betsey*—Goodhue, jr., master; No. 539, brig *Dove*—Dale, master; Feb. 17, 1888, No. 523, brig *Tryall*—Tappan, master; No. 527, brig *Edmund*—Chase, master; Mar. 17, 1888, No. 1746, brig *Nathaniel*—Young, master; Mar. 28, 1888, No. 5502, brig *Catherine*—Cazneau, master; May 11, 1888, No. 139, schooner *Polly*—Lakeman, master.]

Lewis Cochran:

For expenses actually and necessarily incurred as per following statement:

Sept. 18.	Cab to station, with baggage	$0.50	
	Railroad fare, Washington to Philadelphia	5.42	
	Cab, Philadelphia	.50	
20.	Hotel bill, vou. 1	7.25	
	Dinner, Philadelphia	1 00	
	Supper en route	.50	
	Cab to station	.50	
	Railroad fare, Philadelphia to Washington	5.42	
	Cab from station	.75	
	Jurat	.25	
		22.09	
	Less difference between hotel bill and amount allowable at $3.50 per day	1.13	
			20.96

[The above expenses were incurred in taking depositions in French spoliation case, ship *Concord*—Thompson, master, and sundry other like cases.]

John B. Goode:

For expenses actually and necessarily incurred, as per following statement, in attending the taking of depositions in Baltimore, Md., in French spoliation cases Nos. 926, 2112, 348, 2011, 1532, 2168, *et al.*

19.	Baltimore and return	2.00	
	Car fare to station, Washington	.05	
	Car fare to station, Baltimore	.05	
	Parlor car	.25	
	Dinner	1.00	
20.	Car fare	.10	
	Dinner	1.00	
21.	Parlor car, returning to Washington	.25	
	Car fare, Baltimore and Washington	.10	
	Affidavit	.25	
			5.00

Robert A. Howard:
For expenses actually and necessarily incurred, as per following statement:

1888.				
July	18.	Transfer self and trunk to depot, Washington, D. C	$0.50	
		Railroad fare, Washington to New York (limited)	8.85	
		Dinner on train	1.00	
		Transfer baggage to hotel, New York	.50	
	23.	For copy of deposition, William Vernon *et al. v.* The United States, vou. 1	1.50	
	25.	Railroad fare to Bloomfield, N. J., and return	.50	
	30.	Railroad fare to Flushing, R. I., and return	.50	
	31.	Hotel bill, New York, from 18th to 20th, and 21st to 31st, 12 days, at $3.50 per day, vou. 2	42.00	
Aug.	2.	Railroad fare and sleeper, New York to Washington, D.C.	8.50	
		Affidavit to this account	.25	
				$64.10

[The above expenses were incurred in taking testimony in the following cases (French spoliation) in the Court of Claims, as follows: Nos. 161, 911, 2500, 3156, 3724, 4603.]

Charles A. Russell:

Sept.	29.	For services rendered in translating, making legal examinations, preparation of facts, and taking depositions "to enable the Attorney-General to make proper defense for the United States in the matter of French spoliation cases * * * in his discretion," pursuant to an act making appropriation for sundry civil expenses, approved March 4, 1887, from Sept. 1 to Sept. 30, 1888, inclusive, at $2,000 per annum		163.00

John B. Goode:

	29.	For services rendered in keeping dockets, making legal examinations, preparation of facts, and taking depositions "to enable the Attorney-General to make proper defense for the United States in the matter of French spoliation cases * * * in his discretion," pursuant to an act making appropriation for sundry civil expenses, approved March 4, 1887, from Sept. 1 to Sept. 30, inclusive, 1888, at $1,800 per annum		146.80

Charles W. Russell:
For expenses actually and necessarily incurred, as per following statement, in taking depositions in French spoliation cases at Boston and Providence in the case of the *Ranger*, Peckham, No. 2518, and thirty-one other cases:

	23.	Fare to Boston from Washington, $12.15; sleeper $3; meal 65 cents	15.80	
		Hotel expenses as per vou. annexed	11.00	
	27.	Fare to Providence	1.00	
	28.	Fare Providence to Washington, arriving noon, Sept. 28, $11.75; sleeping car, $2.75; 2 meals, $1.50	16.00	
		Jurat	.25	
				44.05

John B. Goode:
For expenses actually and necessarily incurred, as per following statement, in attending the taking of depositions in Baltimore, Md., in French spoliation cases Nos. 2786, 2206, 1532, 4842, 180, 926, 228, 1537, 857, 1531, 2883, 348:

	30.	Railroad fare, Baltimore and return (round trip)	2.00	
		Car fare, Washington	.05	
		Parlor car to Baltimore	.25	
Oct.	1.	Car fare	.10	
		Dinner	1.00	
	2.	Car far	.10	
		Dinner	1.00	
		Parlor car to Washington	.25	
		Cab from station to house in Washington	.50	
		Affidavit	.25	
				5.50

John B. Goode:
For expenses actually and necessarily incurred, as per following statement, in attending the taking of depositions in Baltimore in French spoliation case No. 761 (two witnesses):

1888.				
Oct.	13.	Railroad fare, Baltimore and return	$2.00	
		Car fare to depot	.05	
		Parlor car to Baltimore	.25	
		Car fare, Baltimore	.10	
		Dinner	1.00	
		Parlor car to Washington	.25	
		Cab to house	.50	
	15.	Affidavit	.25	
				$4.40

Wm. I. Hill:
For expenses actually and necessarily incurred, as per following statement, in taking depositions in French spoliation cases on behalf of the United States, Nos. 1173, 3896, 3902, at Philadelphia, Pa.:

	17.	For car fare from Washington	4.00	
		Cab hire	.30	
	18.	1 dinner	.95	
	19.	Cab hire	.50	
		Hotel bill, as per receipt	7.00	
		Car fare to Washington	4.00	
		1 meal	.40	
		Probate	.25	
				17.40

Lewis Cochran:
For expenses actually and necessarily incurred, as per following statement:

	15.	Cab to station, with baggage	.50	
		Railroad fare, Washington to Philadelphia	4.00	
		Sleeping berth	2.00	
	15.	Porter	.25	
	16.	Cab to hotel	.75	
	17.	Hotel bill, vou	5.00	
		Dinner	1.00	
		Supper	.75	
		Cab to station	.75	
		Railroad fare, Philadelphia to Washington	4.00	
		Sleeping berth	2.00	
		Porter	.25	
	18.	Cab from station, Washington	.50	
		Jurat	.25	
				22.00

[The above expenses were incurred in taking depositions in the case of A. L. Eakins, adr. of Chandler Price, deceased, No. 144, French spoliation, and several other cases of like character.]

F. P. Dewees:
For expenses actually and necessarily incurred, as per following statement:

	11.	Transfer to depot	.50	
		Washington to Philadelphia (railroad fare)	4.00	
		Transfer	.35	
		Parlor car	.75	
	22.	3 meals—$1, $1, 60 cents	2.60	
	23.	2 meals—$1, $1	2.00	
		Hotel bill, vou	1.50	
		Street-car fare	.20	
		Transfer	.35	
		Philadelphia to Washington, railroad fare	4.00	
		Transfer	.50	
		Jurat	.25	
				17.00

[Fort, adm. of Malouny, deceased, v. The United States.]

1888.		Charles W. Russell:		
Oct.	31.	For services rendered in translating, taking depositions, and examination of papers "to enable the Attorney-General to make proper defense for the United States in the matter of French spoliation claims, * * * in his discretion" from Oct. 1, to Oct. 31, at $2,000 per annum, less three days absent without pay		$152.17
		Charles W. Russell:		
		For expenses actually and necessarily incurred, as per following statement, taking deposition in Baltimore in French spoliation case No. 4579, and more than 20 other depositions in French spoliation cases:		
	18.	Fare to Baltimore and back	$2.40	
		Dinner	.70	
	19.	Fare, round trip, to Baltimore	2.00	
	20.	Dinner, 70 cents; lunch, 15 cents; street-car fare, 5 cents	.90	
	24.	Fare to Baltimore, round trip	2.00	
		Dinner	.70	
		Jurat	.25	
				8.95
		John B. Goode:		
		For expenses actually and necessarily incurred in attending the taking of depositions in Baltimore, Hartford, Conn.; Boston, Mass.; Newburyport, Mass., and Portsmouth, N. H., in French spoliation cases Nos. 1532, 525, 2131, 1979, 520, 860, 922, 1726, 2657, 922, 2501, 1795 2301, 2007, 2165, 352, 1164, 3154, 2723, 2651, 2828, *et al.*:		
	23.	Railroad fare to Hartford, Conn	8.75	
		Cab to station, self and baggage	.25	
		Parlor car to Baltimore	.25	
		Dinner	1.00	
	25.	Parlor car to Hartford	2.25	
		Transportation across New York, self and baggage	.50	
	28.	Dinner	1.00	
		Self and baggage to hotel in Hartford	.50	
Nov.	2.	Hotel bill at Hartford, vou. 1	15.00	
		Self and baggage to depot	.50	
		Railroad fare, Hartford to Boston	3.25	
		Parlor car	.75	
		Dinner	1.00	
		Cab to hotel, Boston	.50	
	5.	Hotel bill at Boston, vou. 2	12.50	
		Railroad fare to Newburyport	1.00	
		Cab	.50	
		Hotel bill at Newburyport, vou. 3	2.00	
		Telegram, vou. 4	.20	
		Railroad fare to Portsmouth, N. H	.60	
		Cab to hotel in Portsmouth, N. H	.50	
		Hotel bill at Portsmouth, N. H., vou. 5	4.50	
	6.	Railroad fare, Portsmouth to Boston	1.60	
		Cab to hotel in Boston	.50	
		Hotel bill at Boston, vou. 6	3.90	
		Railroad fare, Boston to Washington	11.25	
		Sleeper to Washington	3.00	
		Breakfast en route	.75	
		Affidavit	.25	
				78.55
		Lewis Cochran:		
		For expenses actually and necessarily incurred, as per following statement:		
	5.	Cab to station, with baggage	.75	
		Railroad fare to New York	6.50	
		Seat in parlor car	1.25	
	7.	Three meals, $1, $1, 75 cents	2.75	
	8.	Cab to station, Hudson River Railroad, New York	1.00	
		Railroad fare, New York to Tarrytown	1.88	
		Railroad fare, Fishkill to New York	1.15	
		3 meals—$1, $1, $1	3.00	
		Hotel bill, 1 day deducted, vou	1.16	

1888.		Lewis Cochran—Continued.		
Nov.	8.	Cab to railroad station, New York	$1.00	
		Railroad fare, New York to Washington (reduced rate)	2.17	
		Parlor-car seat	1.25	
		Cab from station, Washington	.50	
		Jurat	.25	
				$27.46
		[The above expenses were incurred in French spoliation case No. 3896, George W. Morris, administrator, *v.* The United States, pending in the United States Court of Claims.]		
		Frederic H. Parkhurst:		
		For services as special attorney, Oct. 5, 1 day, at $10		10.00
		[The above expense incurred in taking depositions in United States French spoliation No. 1600.]		
		Arthur L. Brown:		
		For services as counsel on the 9th, 23d and 25th days of May, 1888, 3 days, at $20 per day	60.00	
		For expenses actually and necessarily incurred, as per following statement:		
		The above fees were incurred in appearing for the United States, examining records and cross-examining witnesses called by claimant in the case of the Rhode Island Hospital Trust Company *v.* The United States, No. 425, French spoliation, in Court of Claims. One per diem, $20, disallowed as not within the terms of employment	20.00	
		Allowed for		40.00
		John B. Goode:		
Oct.	31.	For services rendered in keeping dockets, making legal examinations and preparation of facts, and taking depositions "to enable the Attorney-General to make proper defense for the United States in the matter of French spoliation cases, * * * in his discretion," pursuant to an act making appropriation for sundry civil expenses, approved Mar. 4, 1887, from Oct. 1 to Oct. 31, 1888, inclusive, at $1,800 per annum		151.60
		Thomas M. Knapp:		
Sept.	6.	For services as attorney for the United States from the 1st day of Sept., 1888, to the 10th day of Sept., 1888, 5 days, at $10 per day	50.00	
		For expenses actually and necessarily incurred, as per following statement:		
	3.	For horse and buggy, as per vou. 1	3.00	
			53.00	
		These services were rendered in the following case: Field *v.* The United States Court of Claims, No. 835, French spoliation. Two per diem charges, $20, disallowed as not within the terms of employment	20.00	
				33.00
		F. P. Dewees:		
		For expenses actually and necessarily incurred, as per following statement:		
Nov.	16.	Transfer to depot	.25	
		Railroad fare, Washington to Philadelphia	4.00	
		Dinner (Baltimore)	1.00	
		Street car (Baltimore)	.10	
		Parlor car, Baltimore to Philadelphia	.50	
		Transfer at Philadelphia	.30	
		One meal	.75	
	17.	One meal	1.00	
		Hotel bill, vou. 1	1.50	
		Railroad fare, Philadelphia to Westchester and return	1.60	
		Two meals, 75 cents, $1	1.75	
	18.	Three meals, 80 cents, $1, $1	2.80	
	19.	Street-car fare	.20	
		Three meals, $1, $1, 50 cents	2.50	

1888.		F. P. Dewees—Continued.		
Nov.	19.	Transfer	$0.30	
		Hotel bill, von. 2	1.50	
		Railroad fare, Philadelphia to Washington	4.00	
		Parlor-car fare	.75	
		Transfer	.50	
		Jurat	.25	
				$25.55

[Marshall *v.* United States, French spoliations, 1665; Williams *v.* United States, French spoliations, 2293 and 4155; Corein, administrator, *v.* United States, French spoliations, 2203; Eldridge *v.* United States, French spoliations, 4099; Charles F. Mayer, executor, *v.* United States, French spoliations, 1955; Ridgely, administrator, *v.* United States, French spoliations, 1531; Ridgely, administrator, *v.* United States, French spoliations, 1532; Buchanan *v.* United States, French spoliations, 2011; Floyd & Stewart *v.* United States, French spoliations, 774; Matthews *v.* United States, French spoliations, 119.]

John B. Goode:

For expenses actually and necessarily incurred in attending the taking of depositions of witnesses in case of ship *Alknomac*, Vickers, master, French spoliation:

	17.	Railroad fare, Baltimore and return	2.00	
		Car fare to station	.05	
		Parlor-car	.25	
		Car fare, Baltimore	.10	
		Dinner	1.00	
		Parlor car to Washington	.25	
		Cab to house in Washington	.50	
	26.	Affidavit	.25	
				4.40

John B. Goode:

30. For services rendered in making legal examinations, preparation of facts, keeping dockets, and taking depositions "to enable the Attorney-General to make proper defense for the United States in the matter of French spoliation claims, * * * in his discretion," pursuant to an act making appropriation for sundry civil expenses, approved Mar. 4, 1887, from Nov. 1 to Nov. 30, 1888, at $1,800 per annum 146.80

Charles W. Russell:

For services rendered in translating, making legal examinations, preparation of facts, and taking depositions "to enable the Attorney-General to make proper defense for the United States in the matter of French spoliation claims, * * * in his discretion," pursuant to an act making appropriation for sundry civil expenses, approved Mar. 4, 1887, from Nov. 1 to Nov. 30, 1888, at $2,000 per annum 163.00

Charles A. Russell:

Oct. 30. For services as attorney-at-law on the 30th day of Oct., 1888, one day, at $10 per day, in case of Baird, treasurer, *v.* United States, French spoliation No. 1375, attending taking of depositions of three witnesses by plaintiff 10.00

Samuel W. Emery:

Nov.	2.	For services as special attorney on the 30th day of Oct., 1888, and the 1st and 2d days of Nov., 1888, 3 days, at $10 per day	30.00	
		For expenses actually and necessarily incurred, as per following statement:		
		Car fare, Portsmouth to Exeter and return	.90	
		One dinner	.50	
				31.40

F. P. Dewees:

For expenses actually and necessarily incurred, as per following statement:

Dec.	6.	Transfer	.25	

1888.		F. P. Dewees—Continued.		
Dec.	6.	Railroad fare, Washington to Philadelphia	$4.00	
		Parlor car	.75	
		Transfer	.20	
		One meal	1.00	
	7.	One meal	.80	
		Philadelphia to New York and return	4.00	
		Parlor car, New York and return	1.00	
		Transfer, New York	.75	
		Two meals, $1, $1	2.00	
	8.	Transfer	.20	
		One meal	.90	
	10.	Two meals, $1, $1	2.00	
		Street-car fare	.20	
		Railroad fare, Philadelphia to Washington	4.00	
		Parlor car	.75	
		Transfer	.25	
		Jurat	.25	
				$23.30

[Deposition in New York, Murray v. United States, French spoliation depositions in Philadelphia, McPherson v. United States French spoliation, No. 2693; Musgrove v. United States French spoliation; Machette v. United States French spoliation, No. 119.]

John B. Goode:

31. For services rendered in making legal examinations, preparation of facts, keeping dockets, and taking depositions "to enable the Attorney-General to make proper defense for the United States in the matter of French spoliation claims, * * * in his discretion," pursuant to an act making appropriation for sundry civil expenses, approved March 4, 1887, from Dec. 1 to Dec. 31, inclusive, 1888, at $1,800 per annum 151.60

Charles W. Russell:

For services rendered in translating, making legal examinations, preparation of facts, and taking depositions "to enable the Attorney-General to make proper defense for the United States in the matter of French spoliation claims, * * * in his discretion," pursuant to an act making appropriation for sundry civil expenses, approved Mar. 4, 1887, from Dec. 1 to Dec. 31, inclusive, 1888, at $2,000 per annum 168.50

John B. Goode:

For expenses actually and necessarily incurred, as per following statement, in attending the taking of depositions in French spoliation case No. 1663, John Neely, administrator of John Cooper, deceased, v. The United States, at Norfolk, Va.:

		Fare to Norfolk from Washington, via Bay Line	3.50	
		Parlor car from Washington to Baltimore	.25	
		Cab to station in Washington	.50	
		Transportation across Baltimore to steamer	.50	
		State-room	2.00	
		Supper	1.00	
1889.				
Jan.	1.	Breakfast	1.00	
		Cab in Norfolk	.50	
	3.	Fare from Norfolk to Washington	3.50	
		Baggage to steamer in Norfolk	.25	
		Supper	1.00	
		State-room	2.00	
	4.	Breakfast	1.00	
		Parlor car, Baltimore to Washington	.25	
		Transportation across Baltimore	.50	
		Baggage to home in Washington	.25	
	5.	Affidavit	.25	
				18.25

1889. James A. Kerr:
Jan. 5. For services as special attorney, three days, at $10 per day, in behalf of the United States, and cross-examining witnesses in matter of John Neely, administrator, *v.* The United States French Spoliation No. 1089.

1888.
Nov. 22. To cross-examining George D. Parker $10.00
27. To cross-examining R. H. Baker, sr 10.00
28. To cross-examining R. H. Baker, sr 10.00 $30.00

1889. Charles W. Russell:
Jan. 31. For services rendered in translating, making legal examinations, preparation of fact, and taking depositions "to enable the Attorney-General to make proper defense for the United States in the matter of French spoliation claims, * * * in his discretion," pursuant to an act making appropriation for sundry civil expenses, from Jan. 1 to Jan. 31, inclusive, 1889, at $2,000 per annum 172.20

John B. Goode:
For services rendered in making legal examinations, preparation of facts, taking depositions, and keeping dockets "to enable the Attorney-General to make proper defense for the United States in the matter of French spoliation claims, * * * in his discretion," pursuant to an act making appropriation for sundry civil expenses, from Jan. 1 to Jan. 31, inclusive, 1889, at $1,800 per annum 155.00

1888-'89. George C. Priot:
Jan. 19. For services as special attorney on the 29th day of Dec., 1888, and the 4th, 5th, 7th, and 19th days of Jan., 1889, five days, at $10 per day 50.00
[McDonald *v.* The United States, No. 2428, French spoliation.]

Charles W. Russell:
For expenses actually and necessarily incurred, as per following statement, in taking depositions in the case of Daniel L. Prager, administrator of Mark Prager, *v.* The United States, French spoliations, No. 265, at Wheeling, W. Va., on the 7th of Nov., 1888:

1888.
Nov. 7. Fare to Wheeling and return $20.00
Sleeper 2.00
Jurat ..... .25 22.25

Charles W. Russell:
For expenses actually and necessarily incurred, as per following statement, in taking depositions in the case of Bayard Tuckerman, administrator of Walker Channing, *v.* The United States, French spoliations, No. 1176, and in the case of F. Dabney, administrator of S. Wyllis Pomeroy, *v.* The United States, spoliations, at New York City on Dec. 4 and 5, 1888:
Dec. 4. Fare to New York and return 10.00
Sleeper 2.00
5. Hotel bill 1 day, as per vou 3.50
Breakfast, 75 cents; dinner, 60 cents; supper, 45 cents. 1.80
Jurat ..... .25 17.55

Charles W. Russell:
For expenses actually and necessarily incurred, as per following statement, in taking depositions in the case of John Handy, administrator of William Handy, *v.* The United States, French spoliations, No. 149, and in other cases, at Boston and New Bedford, Mass:

1889.
Jan. 3. Fare to Boston 12.15
Sleeper 3.00
Dinner ..... .80

1889.		Charles W. Russell—Continued.		
Jan.	7.	Hotel bill in Boston, as per vou., 3 days' board and breakfast	$12.15	
		Fare to New Bedford and return to Boston	2.70	
		Lunch	.35	
	8.	Hotel bill, 1 day, as per vou	3.50	
	9.	Hotel bill in Boston, 1 day, at $3.50, and dinner at $1.20, as per vou	4.70	
		Fare to Washington	12.25	
		Sleeper	3.00	
	10.	Breakfast on train (seven hours delayed), 40 cents; dinner, 75 cents	1.15	
		Jurat	.25	
				$56.00
		Charles W. Russell:		
		For expenses actually and necessarily incurred, as per following statement, in taking deposition, in the cases of A. W. Clason, administrator of Isaac Clason, v. the United States, French spoliations, No. 2818 and other Nos., at Irwin's Station, Goochland County, Va.:		
	31.	Fare to Richmond and return	7.00	
		Lunch	.15	
Feb.	1.	Hotel bill, $2.50, and omnibus, 25 cents, as per vou., 1 day	2.75	
		Fare to Irwin's Station and return to Richmond	2.60	
		Lunch	.15	
		Dinner in Richmond	.75	
		Jurat	.25	
				13.65
		John Courtney, jr.:		
		For services as special assistant attorney from Feb. 1, 1889, to the 6th day of Feb., 1889, dates inclusive, 6 days, at $15 per day	90.00	
		For expenses actually and necessarily incurred, as per following statement:		
	1.	Telegram from New York to Beldensville, N. Y., ten words, vou. 1	.25	
		Breakfast, dinner, and supper in New York, $1 each	3.00	
		One telegram received by J. Courtney, jr., from Beldensville, N. Y., seven words, vou. 2	.25	
	2.	Breakfast, dinner, and supper in New York, $1 each	3.00	
	3.	Railroad fare from New York to Syracuse, N. Y	6.00	
		Sleeper	1.50	
		Necessary porterage	.25	
		Breakfast, dinner, and supper in New York, $1 each	3.00	
	4.	Breakfast, dinner, and supper in Syracuse	1.50	
	5.	Supper, lodging, and breakfast in Syracuse, vou. 3	1.50	
		Railroad fare, Syracuse to Beldensville, N. Y	.25	
		Dinner at Beldensville, N. Y	.50	
		Railroad fare, Beldensville, N. Y., to Syracuse	.25	
		'Bus fare at Beldensville	.20	
		Supper at Syracuse, N. Y	.50	
	6.	Breakfast, dinner, and supper, 75 cents each	2.25	
				114.20
		[In French spoliation claims, case No. 2428.]		
		Charles W. Russell:		
Feb.	28.	For services rendered in translating, making legal examinations, and preparation of facts "to enable the Attorney-General to make proper defense for the United States in the matter of French spoliation claims. * * * in his discretion," pursuant to an act making appropriation for sundry civil expenses; from Feb. 1 to Feb. 28, inclusive, 1889, at $2,000 per annum		155.60

1889.		John B. Goode:		
Feb.	28.	For services rendered in keeping dockets, making legal examinations and preparation of facts "to enable the the Attorney-General to make proper defense for the United States in the matter of French spoliation claims. * * * in his discretion," pursuant to an act making appropriation for sundry civil expenses, from Feb. 1 to Feb. 28, inclusive, 1889, at $1,800 per annum		$140.00
		F. P. Dewees:		
		For expenses actually and necessarily incurred, as per following statement:		
	26.	Transfer	$0.25	
		Railroad fare, Washington to Philadelphia and return	6.00	
		Parlor car	1.50	
		1 meal	1 00	
	27.	3 meals, $1, 50 cents, $1	2.50	
		Street-car fare	1.20	
	28.	1 meal	1.00	
		Hotel bill, von. 1, 2 days	4.00	
		Transfer from and to depot	.60	
		Transfer at Washington	.25	
		Jurat	.25	
				17.55
		[Aiken, administrator of Kennedy v. The United States No. —, French spoliations.]		
		John B. Goode:		
		For expenses actually and necessarily incurred as per following statement in attending the taking of depositions in Baltimore, Md., in French spoliation cases Nos. 1764, 1103, 1190, 1532, 2452, 3093, 228, 2782, 504, *et al.*		
Mar.	25.	Cab to station	.25	
		Railroad fare (round-trip ticket)	2.00	
		Parlor car	.25	
		Dinner	.85	
		Street-car fare	.10	
	26.	Dinner	1.00	
		Street-car fare	.10	
		Parlor car to Washington	.25	
		Cab to house in Washington	.50	
	28.	Affidavit	.25	
				5.55
		John B. Goode:		
Mar.	31.	For services rendered in making legal examinations, preparation of facts and taking depositions "to enable the Attorney-General to make proper defense for the United States in the matter of French spoliation claims * * * in his discretion," pursuant to an act making appropriation for sundry civil expenses, from March 1 to March 31, inclusive, 1889, at $1,800 per annum		155.00
		Chas. W. Russell:		
Mar.	31.	For services rendered in translating, making legal examinations, and preparation of facts "to enable the Attorney-General to make proper defense for the United States in the matter of French spoliation claims * * * in his discretion," pursuant to an act making appropriation for sundry civil expenses, from March 1 to March 31, inclusive, 1889, at $2,000 per annum		172.20
		John B. Goode:		
		For expenses actually and necessarily incurred, as per following statement, in attending the taking of depositions in Boston, Mass., April 24, 1889, in French spoliation cases Nos. 4054 and 4055:		
Apr.	23.	Railroad fare to Boston	12.25	
		Sleeper	3.00	
		Street-car fare to station	.05	
		Dinner	1.00	

1889.		John B. Goode—Continued.		
Apr.	24.	Breakfast	$0.90	
		Dinner	1.00	
		Supper	1.00	
		Cab from station to hotel in Boston	.50	
		Cab from hotel to station in Boston	.50	
		Room at hotel, von. attached	1.00	
		Railroad fare to Washington	12.25	
		Street-car fare in Boston	.10	
		Sleeper	3.00	
	25.	Breakfast (en route) at Philadelphia	.85	
		Cab from station in Washington to office (raining hard)	.25	
	26.	Affidavit	.25	
				$37.90
		John B. Goode:		
Apr.	30.	For services rendered in making legal examinations, preparation of facts and taking depositions "to enable the Attorney-General to make proper defense for the United States in the matter of French spoliation claims * * * in his discretion," pursuant to an act making appropriation for sundry civil expenses, from April 1 to April 30, inclusive, 1889, at $1,800 per annum		148.30
1889.		Charles W. Russell:		
Apr.	30.	For services rendered in translating, making legal examinations, and preparation of facts "to enable the Attorney-General to make proper defense for the United States in the matter of French spoliation claims * * * in his discretion," pursuant to an act making appropriation for sundry civil expenses, from April 1 to 30, 1889, at $2,000 per annum, 28 days 1		153.80
1888.		F. H. Busbee:		
Oct.	29.	For services as attorney and cross-examiner on the 29th day of October 1888, 1 day, at $10 per day		10.00
		[No. 288, spoliation, John Devereux, executor, v. The United States. For services in appearance at the taking of the depositions and in cross examination of the witness for the claimant, John Devereux, before T. R. Haywood, commissioner at Raleigh, N. C., October 29, 1888.]		
		Charles W. Russell:		
		For expenses actually and necessarily incurred, as per following statement, in taking depositions at Norwich, Conn., and Boston, Mass., in French spoliation cases Nos. 4358, 4359, 4967, 4968:		
May	15.	Fare, round trip, New York and back, $10; sleeper $2	12.00	
		Breakfast	.90	
	16.	Fare, New York to Norwich	3.15	
		Lunch, 20 cents; dinner, 25 cents	.45	
		Fare, Norwich to New London	.40	
		New London to Boston	2.60	
	17.	Hotel expenses in Boston	3.95	
		Street-car fare, New York and Boston	.10	
		Fare, Boston to Jersey City	5.75	
		Sleeper, Boston to Washington	3.00	
	18.	Breakfast at Philadelphia	.85	
		Jurat	.25	
				33.40
		Charles W. Russell:		
May	31.	For services rendered in making legal examinations, preparation of facts, and translating, "to enable the Attorney-General to make proper defense for the United States in the matter of French spoliation claims * * * in his discretion," pursuant to an act making appropriation for sundry civil expenses, from May 1 to 31, 1889, inclusive, at $2,000 per annum		170.40

1889.	John B. Goode:		
May 31.	For services rendered in making legal examinations, preparation of facts, and keeping dockets "to enable the Attorney-General to make proper defense for the United States in the matter of French spoliation claims * * * in his discretion," pursuant to an act making appropriation for sundry civil expenses, from May 1 to 31, inclusive, at $1,800 per annum	$153.40	
1888.	Thomas M. Knapp:		
Nov. 12.	For services as attorney for the United States on the 25th day of Oct., 1888, and 12th day of Nov., 1888, 2 days, at $10 per day	20.00	
	Frederick H. Parkhurst:		
	For services rendered as special attorney in attending the taking of depositions by claimant in the French spoliation case of Franklin A. Wilson, administrator *de bonis non* of the estate of John Pearson, deceased, *vs.* the United States, No. 4300, at Bangor, Me., examining and cross-examining the witnesses for the defendant, 3 days, Nov. 17, 19, and 20, at $10	30.00	
	For services rendered as special attorney in attending the taking of depositions by claimant in the French spoliation case of Joseph T. Little, administrator *de bonis non*, No. 4352, at Castine, Me., examining and cross-examining witnesses for defendant:		
1889.			
May.	2 days, 15th and 16th, at $10	20.00	
	For expenses actually and necessarily incurred in taking said depositions at Castine, as per following statement:		
16.	Steam-boat fare from Bangor to Castine	1.00	
17.	Steam-boat fare from Castine to Bangor	1.00	
	Bill at hotel, as per voucher	3.50	
			$55.50
	Charles W. Russell:		
June 29.	For services rendered in translating, making legal examinations, preparation of facts, and taking depositions "to enable the Attorney-General to make proper defense for the United States in the matter of French spoliation claims * * * in his discretion," pursuant to an act making appropriation for sundry civil expenses, from June 1 to 30, 1889, inclusive, at $2,000 per annum		164.80
	John B. Goode:		
June 29.	For services rendered in making legal examinations, preparation of facts, keeping of dockets, and taking depositions, "to enable the Attorney-General to make proper defense for the United States in the matter of French spoliation claims * * * in his discretion," pursuant to an act making appropriation for sundry civil expenses, from June 1 to 30, 1889, inclusive, at $1,800 per annum		148.30

EXHIBIT F 8.—REPAIRS TO COURT-HOUSE, DISTRICT OF COLUMBIA.

	F. B. Bradbury:		
1888.	For the following:		
Oct. 13.	One 1-inch wood handle, nickel-plated radiator valve	$3.50	
	One ¾-inch wood handle, nickel-plated radiator valve	2.85	
	One 1-inch coupling, 12 cents; two 1-inch nipples, 40 cents;	.52	
	Two feet 3-inch pipe, 18 cents; one 4-foot C. I. radiator top, $1.25	1.43	
	1 wood radiator section	6.00	
	Painting and bronzing one radiator	1.00	
	2 days' time of steam-fitter and helper making repairs to heating apparatus, at $7	14.00	
			$29.30

W. D. Wyvill:

1888.				
		For the following:		
Oct.	16.	31 sheets tin, 20 cents	$6.20	
		21 pounds solder, 25 cents	5.25	
		¼ gallon metallic paint	.75	
		8 pounds copper, 35 cents	2.80	
		2 pounds solder, 25 cents	.50	
		27 days' work of tinsmith, repairing roof and spouting, $3.	81.00	
				$96.50

C. Burlew:

Oct.	18.	For furnishing material and labor and laying 116⅔ superficial yards of asphaltic concrete pavement in corridor of eastern building, at 90 cents	105.00	
		For taking up and relaying 9 superficial yards of concrete pavement in court-yard, at 90 cents	8.10	
				113.10

W. W. Dougherty:

		For the following:		
Oct.	16.	24 feet ¼-inch pipe, 10 cents	2.40	
		1 valve and spring for water-closet	1.50	
		1 meter connection	2.25	
		2 valves and springs for water-closets	2.50	
		1 valve and spring for water-closet	1.50	
		1 gross burners and tips for gas-fixtures	2.50	
		5 feet ½-inch pipe, 15 cents	.75	
		2 valves and springs for water-closets	2.50	
		1 basin plug and chain	1.25	
		1 new waste for urinal	1.75	
		1 new waste for urinal and repairs to basin	2.75	
		4½ feet ¼-inch pipe, 10 cents	.45	
		300 feet ½-inch pipe for connecting tanks, 7 cents	21.00	
		46 days' work as plumber making all necessary repairs to gas-fixtures, water and steam pipes, closets, bath-rooms, and making connections to tanks in east and west ends of building, etc, at $3	138.00	
				181.10

E. A. Ridgway:

		For the following—		
Oct.	16.	Two 6-inch air-piston leathers, 75 cents	1.50	
		Two 6-inch transfer leathers, 25 cents	.50	
		Two 6-inch pump leathers, 25 cents	.50	
		Two 6-inch rod leathers, 10 cents	.20	
		Three 6-inch piston packings, 75 cents	2.25	
		Three 6-inch piston leathers, 25 cents	.75	
		3 pump washers, 10 cents	.30	
		2 foot valves, 10 cents	.20	
		Six 6-inch pump valves, 30 cents	1.80	
		Two 6-inch stand leathers, 10 cents	.20	
		Three 6-inch piston leathers, 25 cents	.75	
		Three 6-inch pump leathers, 25 cents	.75	
				9.70

[Repairs to steam-pump.]

Robert W. Waters:

Oct.	16.	For 12 days' work as painter and glazier, at $3		36.00

Thomas W. Smith:

Oct.	16.	For 120 feet of Michigan pine, dressed, at 5 cents		6.00

H. L. Crawford:

Oct.	13.	For furnishing material and labor and laying 669.51 superficial feet of Neuchatel pavement, at 25 cents		167.38

C. Schneider:

		For the following:		
Oct.	16.	Making keys and repairs to 16 locks, at 55 cents	8.80	
		Furnishing and putting on 1 Norton spring	6.75	
		Repairing and putting on 7 Norton springs, at $1.25	8.75	
		Two large keys, at 30 cents	.60	
				24.90

S. H. Schneider's Son:

		For the following:		
Oct.	13.	½ dozen sheets sand-paper, 20 cents	.10	

1888.		S. H. Schneider's Son—Continued.		
Oct.	13.	4 water-gauge glasses and floats, at $1.50	$6.00	
		1 trowel	.50	
		4 pounds of nails, at 5 cents	.20	
		2 padlocks, at 50 cents	1.00	
		1 file, 35 cents; 1 gas.plyer, $1	1.35	
		6 machine screws, at 20 cents a dozen	.10	
		1 screw-driver, 25 cents; 6 hooks, 20 cents	.45	
		6 pounds of nails, 25 cents; 6 sheets sand-paper, 10 cents.	.35	
		1 can of glue, 25 cents; 3 files, 56 cents	.81	
		8 pounds of nails, at 5 cents	.40	
		6 nuts, 6 cents; 1 file, 16 cents	.22	
		1 pound of copper wire	.35	
		3 saw-files, 10 cents	.30	
		2½ pounds of sash-cord	.57	
		1 gross of screws	.50	
				$13.20
		C. A. Schneider's Sons:		
		For the following:		
	16.	Repairs to one bolt	.25	
		1 arch-bar	3.00	
		2 fire-rakes, $2.50	5.00	
		Repairs to 1 hoe	1.00	
				9.25
		D. R. Neall:		
	27.	For 25 days' work as carpenter, making sundry repairs from July 1 to September 17, 1888, at $3		75.00
		Antonio Miller:		
	24.	For 5½ days' work as painter, $3		16.50
		W. H. Butler:		
		For the following:		
	16.	3 pounds of putty, 5 cents	.15	
		20 lights glass glazed, 42 cents	8.40	
		1½ gallons turpentine, 57 cents	.86	
		3 whitewash brushes, $1	3.00	
		½ gallon walnut stain, $2	.25	
		½ gallon hard-oil finish, $2	.25	
		1 pound black paint	.15	
		½ pound burnt umber	.05	
				13.11
		W. D. Wyvill:		
		For the following for repairs to roof of building at northeast corner, viz:		
Dec.	1.	3 days' work of tinsmith and helper, at $6	18.00	
		6 pounds solder, at 25 cents	1.50	
		24 sheets tin, at 20 cents	4.80	
				24.30
		George Cumberland:		
	7.	1 piece of timber, 32 feet long, 8 by 8, at 33 cents per linear foot		10.56
1889.		C. H. Delamater & Co.:		
Jan.	3.	Six 6-inch full sets leather packing for gas pumping engine at court-house, at 60 cents		3.60
1888.		Acker & Co.:		
Nov.	20.	6 pieces blue-stone flagging for covering to air duct, 25 superficial feet, at 20 cents	5.00	
		1 Ohio stone sill, 2.7 linear feet, at 65 cents	1.75	
		drayage	.78	
				7.53
1889.		J. P. Johnston:		
Feb.	16.	Putting on 1 eclipse door-spring and check, east door city-hall	4.50	
		1 push plate	.40	
		1 brass handle	.40	
				5.30

1888.				
		Thomas W. Smith:		
Mch.	27.	273 feet ¼ white pine pick culls, at 4½ cents	$12.28	
		64 feet 2 by 4 by 6 Georgia pine, at 3 cents	1.92	
				$14.20
		W. W. Dougherty:		
		For extension of heating apparatus and coal-vaults; for taking up and relaying sewer at coal-vaults, northeast corner city-hall, viz:		
Apr.	24.	65 feet terra-cotta pipe, at 32 cents	20.80	
		Seven 8-inch terra-cotta bends, at 90 cents	6.30	
		One 8-inch terra-cotta Y	1.20	
		1 barrel cement	2.00	
		20 pounds lead, at 6 cents	1.20	
		5 feet 6-inch cast-iron pipe XX, at 55 cents	2.75	
		One 6-inch cast-iron bend	1.20	
		3 days' work of plumber, at $4.50	13.50	
		14 days' work of laborers, at $1.50	21.00	
				69.95
		Denis McNamara:		
		For extension of heating apparatus and coal-vaults:		
	26.	Excavating 428 cubic yards of soil at coal-vaults, northeast corner of court-house, at 40 cents	171.20	
		7 days' work of laborers, digging ditches for pipes and foundations, at $1.50	10.00	
				181.20
		James Chew:		
		Extension of heating apparatus and coal-vaults:		
May	7.	Cleaning 4,600 old serviceable brick for use in coal-vaults, at $1.50 per M		6.90
		Charles Vance:		
		For extension of heating apparatus and coal-vaults:		
	9.	Furnishing the following labor and material for coal-vaults at northeast corner of building:		
		54 perches of building stone, at $5	270.00	
		For the following repairs to old wall:		
		4 days' work of mason, at $3	12.00	
		2 days' work of laborer, at $1.50	3.00	
				285.00
		Thos. W. Smith:		
		For extension of heating apparatus and coal-vaults:		
	3.	24 pieces 3 by 4 Virginia pine, 576 feet, at 1.4 cents, for supports and scaffolding		8.06
		Horace Clark:		
		For extension of heating apparatus and coal-vaults:		
	20.	Digging one absorbing well, 14 feet deep, at northeast corner of coal-vault, at $1.25 per foot depth		17.50
		W. D. Wyvill:		
		For labor and material in repairing roof in various portions:		
	21.	8 days' time of tinsmith, $4	32.00	
		8 days' time of helper, $2	16.00	
		12 pounds of solder, 25 cents	3.00	
		6 sheets of painted tin, 20 cents	1.20	
				52.20
		James Chew:		
		For extension of heating apparatus and coal-vaults:		
	25.	Cleaning 6,100 old serviceable brick, for use in coal vaults, at $2 per M		12.20
		[Brick originally laid in cement.]		
		New Jersey Steel and Iron Company:		
		For extension of heating apparatus and coal-vaults.		
		For the following rolled-iron beams for coal-vaults at east and west ends of north front of building:		
	11.	16 beams, 10½ inch, 16 feet long, 7,680 pounds, at 2.8 cents		215.04

1889. Thomas Lowe:
For extension of heating apparatus and coal-vaults:
May 3. Laying 12,000 bricks, mortar for same, at north coal-vault, at $6.50 per M $78.00

Thomas Somerville & Sons:
For the following material for gas and steam fitting:

Oct. 16.	One 4 by 2 reducer (cast-iron)	$0.20
	One 1¼-inch lead trap	.70
	1 piece of 2-inch pipe	.96
	One 2-inch caulk thimble	.35
	One 1¼-inch nipple	.10
	17⅝ pounds lead pipe, 7 cents	1.17
	1 plated basin-cock	1.25
	1 plated basin-plug	.70
	18 inches plated basin-chain, 10 cents per foot	.15
	Two 1¼-inch thimbles, 25 cents	.50
	One 1¼-inch lead trap	.70
	101 feet ¼-inch galvanized pipe, 5 cents	5.05
	One ¼-inch compression bibb	.60
	One ⅜-inch bushing	.05
	18½ feet 1¼-inch pipe, 7 cents	1.30
	26 feet ⅜-inch pipe, 2½ cents	.65
	One ⅜-inch nipple	.04
	One piece ⅜-inch pipe	.34
	Five ⅜-inch bushings, 5 cents	.25
	One 2-inch cast-iron tee	.16
	10 pounds of lead, 6 cents	.60
	1 cess-pool and cover	.60
	One 4-inch quarter bend	.44
	One ¼-inch long screw	.20
	Twelve 1-inch straps, 1 cent	.12
	Twelve ⅜-inch straps, 1 cent	.12
	Twelve 1¼-inch straps	.10
	1 pint machine oil	.10
	5 pounds brass fittings, 12 cents	.60
	55 feet 1-inch galvanized iron pipe, 8 cents	4.40
	Two ¼-inch stops, 70 cents	1.40
	50½ feet ⅜-inch galvanized iron pipe, 6 cents	3.03
	10 feet lead pipe, 13 cents	1.30
	14½ pounds lead, 6 cents	.86
	4 pounds wiping solder, 15 cents	.60
	Two 1¼-inch S. traps, 65 cents	1.30
	22½ pounds lead pipe, 6 cents	1.35
	4 pounds wiping solder, 15 cents	.60
	One 2-inch S. trap	.32
	1 pound galvanized fittings	.25
	19 pounds lead pipe, 7 cents	1.33
	One 6-inch copper ball	.65
	7½ pounds lead pipe, 7 cents	.52
	1 basin clamp	.10
	4 pounds wiping solder, 15 cents	.60
	6 feet 2-inch galvanized iron pipe, 22$\frac{4}{5}$ cents	1.81
	Two 2-inch galvanized ells, 30 cents	.60
	Cutting 1 piece pipe	.35
	One 4-inch trap	.80
	5 feet 5-inch C. I. iron, extra heavy, 18 cents	.90
	20 feet 5-inch double-hubb pipe, 15 cents	3.00
	Three 2-inch quarter bends, 20 cents	.60
	5 feet 2-inch pipe, 12 cents	.60
	20 pounds lead, 6 cents	1.20
	16 feet galvanized ¼-inch pipe, 5 cents	.80
	Two ⅜-inch stop wastes, 85 cents	1.70
	70 feet ⅜-inch galvanized pipe, 6 cents	4.20
	8 pounds galvanized fittings, 15 cents	1.20
	Two 1¼-inch lead S. traps, 80 cents	1.60
	43 feet lead pipe, 7 cents	3.01
	One ¼-inch lead cock	.65
	One ⅜-inch compression bibb	.85

1889.				
		Thomas Somerville & Sons—Continued.		
Oct.	16.	Two ¼-inch ferrules, 15 cents	$0.30	
		One 2-inch calking thimble	.45	
		20 pounds wiping solder, 12 cents	2.40	
		8 pounds lead pipe, 7 cents	.56	
		One 14-inch basin	1.10	
		¼ pound fittings, 18 cents	.09	
		One 4 by 2 P. trap	.80	
		Two ¼-inch plugs, 3 cents	.06	
		One ¼-inch stop-waste	.70	
		Two ¼-inch plugs, 3 cents	.06	
		One ¾ inch galvanized long iron	.30	
		Two 1-inch plugs, 4 cents	.08	
		Two ¼-inch ells, 3 cents	.06	
		Two ¼-inch nipples, 5 cents	.10	
		One ¼-inch tee	.04	
		One ¾-inch reducer	.05	
		One ¼-inch plug	.03	
		One 1-inch check-valve	.85	
		One 1-inch long screw	.45	
		19 pounds assorted lead pipe, 14⅓ cents	2.78	
		One 2-inch lead thimble	.15	
		4 pounds wiping solder, 15 cents	.60	
		One ½-inch stop cock	.60	
		3 pounds solder, 16 cents	.48	
		1 No. 3 McFarland tank	5.40	
		30 pounds pig lead, 6 cents	1.80	
				$80.87
		Denis McNamara:		
		For extension of heating apparatus and coal vaults:		
June	1.	Excavating 430¼ cubic yards of soil for western coal vault, at 40 cents		172.20
		Charles Vance:		
		For extension of heating apparatus and coal-vaults:		
	7.	Furnishing and laying 52 perches of building stone, including mortar, at northwest corner of building, at $5		260.00
		L. H. Schneider's Son:		
		For the following hardware, etc., for general repairs:		
		2 bolts, 10 cents; 1 hand file, 12 cents	.22	
		1 warding-file	.27	
		1 bronze letter-plate	.75	
		2 padlocks, $1; 1 oil-can, 15 cents; ¼ dozen staples, 5 cents	1.20	
		5 sheets emery cloth, 25 cents; 5 sheets sand paper, 5 cents	.30	
		1 wrench	.80	
		1 pound of wire, 7 cents; 1 door-spring, 40 cents	.47	
		75 feet weather-strip, 5 cents	3.75	
		2 bolts, 10 cents; 1 door-pull, 10 cents; 1 handle, 10 cents	.30	
		6 pounds nails, 10 cents	.60	
		2 pounds sash cord, 25 cents	.50	
		3 papers tacks, 7½ cents	.23	
		2½ pounds steam packing, 35 cents	1.01	
				10.40
		Horace White:		
		For extension of heating apparatus and coal-vaults:		
	15.	Digging and walling one well, 22 feet deep, at western coal-vaults, at $1.25 per foot		27.50
		Employés, etc., court-house, D. C.:		
		Pay-roll of persons employed at court-house, D. C., making repairs, etc., under direction of Edward Clark, architect United States Capitol		163.37
		Windsor & Ford:		
		For extension of heating apparatus and coal-vaults:		
	17.	15,000 arch bricks for use in coal vaults, at $7.50		112.50

Thomas Lowe:

1889. For extension of heating apparatus and coal-vaults:

June 18. Laying 9,800 bricks, including mortar for same, at north coal-vault, at $6.50 per M $63

12 days' work as brick-layer at setting window gratings, cutting doorways, and pointing old stone wall, at $4 48

12 days' time of hod-carriers, at $2 24

2 cart-loads of mortar for jobbing, at $4 8

Geo. W. Knox:

For extension of heating apparatus and coal-vaults:

7. Drayage on 2 loads iron beams for coal-vaults, at $3 .....

H. W. Blunt:

For extension of heating apparatus and coal-vaults:

May 24. 10 barrels hydraulic cement for brick and mason work at coal-vaults, at $1 .....

Washington Gas-Light Company:

For extension of heating apparatus and coal-vaults; for the following labor and material in re-arranging connections to gas-main and meter, rendered necessary by the construction of the coal-vaults, viz:

June 20. 4 days' time of gas-fitter, changing meter connections, at $2.50 10

40 lineal feet of 2-inch service-pipe, at 50 cents 20

Six 2-inch bends for service-pipe, at 50 cents 3

Denis McNamara:

For extension of heating apparatus and coal-vaults; for the following for coal-vault at northeast corner of building, viz:

28. Paving, and furnishing sand for same, 125 superficial yards, at 25 cents 31

Furnishing soil and replacing earth at top of vault, 100 loads, at 25 cents 25

Cleaning out and hauling away earth from well, 19½ days' time, at $1.50 29

Employés, etc., court-house, District of Columbia:

Extension of heating apparatus and coal-vaults:

29. Pay-roll of persons employed at court-house, District of Columbia, making repairs, etc., under direction of Edward Clark, architect United States Capitol .....

EXHIBIT F 9.—PUNISHING VIOLATIONS OF INTERCOURSE FRAUDS.

1888. Henry M. Marchant:

July 31. For services as special agent from July 1 to July 31, 1888, dates inclusive, 31 days, at $6 per day $186

For expenses actually and necessarily incurred, as per following statement:

13. Hotel bill, Spokane Falls, von. 1 36

Baggage, hotel to Northern Pacific Railroad .....

Transportation order No. 222 over Northern Pacific Railroad, Spokane Falls to St. Paul, Minn.

Sleeper, Spokane Falls to St. Paul 10

Breakfast, dining-car, Northern Pacific Railroad .....

Dinner, dining-car, Northern Pacific Railroad .....

Supper, dining-car, Northern Pacific Railroad .....

14. Breakfast, dining-car, Northern Pacific Railroad .....

Dinner, dining-car, Northern Pacific Railroad .....

Supper, dining-car, Northern Pacific Railroad .....

15. Breakfast, dining-car, Northern Pacific Railroad .....

Dinner, dining-car, Northern Pacific Railroad .....

Supper at St. Paul, Minn 1

Baggage .....

Transportation order No. 223 over the Chicago, Milwaukee and St. Paul Railroad, from St. Paul to Chamberlain, Dak.

1888.		Henry M. Marchant—Continued.		
July	16.	Two a. m., lunch, Mason City, while waiting connection	$0.65	
		Breakfast, Sexton, Iowa	.50	
		Dinner, Parker, Dak	.50	
	19.	Ferry, Chamberlain to Lower Brule and return	1.00	
	30.	Ferry, Chamberlain to Lower Brule and return	1.00	
	31.	Hotel bill, Chamberlain, vou. 2	15.00	
				$259.35
		Henry M. Marchant:		
Aug.	31.	For services as special agent from August 1 to 31, 1888, dates inclusive, 31 days, at $6 per day	186.00	
		For expenses actually and necessarily incurred, as per following statement:		
	1.	Transportation order No. 224, Chamberlain to Chicago.		
		Breakfast at Chamberlain, Dak	.50	
		Dinner at Chamberlain, Dak	.50	
		Supper at Chamberlain, Dak	.50	
		Lodging at Chamberlain, Dak	.50	
	2.	Breakfast at Chamberlain, Dak	.50	
		Dinner at Parker, Dak	.50	
		Supper at Mason City, Iowa	.75	
		Sleeper to McGregor from Mason City	2.00	
	3.	Breakfast, Dubuque, Iowa	.50	
		Seat in sleeper to Chicago from McGregor, Iowa	1.50	
		Dinner, dining-car	.75	
		Supper, Fort Wayne, Ind	.75	
		Sleeper, Chicago to Washington	5.00	
		Transportation order No. 225, Chicago to Washington, D. C.		
		Breakfast, Pittsburgh, Pa	.75	
		Dinner, buffet-car	1.00	
		Lunch, Harrisburg, Pa	.60	
		Self and baggage, depot to house	.50	
		Jurat	.25	
				203.35
		Henry M. Marchant:		
Sept.	30.	For services as special agent from September 1 to 30, 1888, dates inclusive, 30 days, at $6 per day		180.00
		Henry M. Marchant:		
Oct.	1.	For services as special agent from October 1 to 31, 1888, dates inclusive, at $6 per day	186.00	
	24.	Transportation order No. 268, Washington to Dallas, Tex.		
		Transfer baggage, house to depot	.25	
		Supper Pennsylvania Railroad depot	*.90	
		Sleeping-car to St. Louis	5.00	
	25.	Breakfast, Pittsbugh, Pa	.75	
		Dinner, Columbus, Ohio	.75	
		Supper, Richmond, Ind	.75	
	26.	Sleeping-car porter	.25	
		Breakfast, St. Louis, Mo	.90	
		Sleeping-car to Dallas, Tex	5.00	
		Dinner on buffet-car "Mersey"	.85	
		Supper on buffet-car "Mersey"	.65	
	27.	Breakfast on buffet-car "Mersey"	.80	
		Dinner on buffet-car "Mersey"	.70	
		Supper on buffet-car "Mersey"	.75	
	28.	At friend's in Dallas, no charge.		
	29.	At friend's in Dallas, no charge.		
		Transportation order No. 269, from Dallas to Vinita, Ind. Ter., via Houston and Texas Central Railroad.		
		Transfer, self and baggage to depot	.75	
	30.	Sleeping-car to Vinita, Ind. Ter	3.00	
		Supper on buffet-car	.85	
	31.	Breakfast on buffet-car	.70	
		Sleeping-car porter	.25	
		Dinner, Vinita, waiting for train	.50	

* Disallowed.

1888.		Henry M. Marchant—Continued.		
Oct.	31.	Supper, Vinita, waiting for train	$0.50	
		Ticket, Vinita to Cedarvale, Kans	4.10	
			214.95	
		By disallowance of above	.90	
				$214.05
		Henry M. Marchant:		
Nov.	30.	For services as special agent from Nov. 1 to 30, 1888, dates inclusive, 30 days, at $6 per day	180.00	
		For expenses actually and necessarily incurred, as per following statement:		
	1.	Breakfast, Sedan, Kans	.50	
		Transfer, self and baggage, Cedar Vale to depot	.50	
		Dinner, Cedar Vale, Kans	.50	
		Railroad fare, Cedar Vale to Chautauqua	.65	
		Transfer, self and baggage, depot to hotel, Chautauqua	.50	
		Supper, Chautauqua	.50	
		Team and driver, Chautauqua to Osage Agency, vou. 1	4.00	
	2.	Hotel bill, Osage Agency, vou. 2	1.50	
		Transfer, baggage, hotel to agent's residence	.50	
	3 to 6.	Guest of Indian Agent Smith.		
	7.	En route to Cedar Vale with Agent Smith.		
	8.	Hotel bill, Cedar Vale, vou. 3	3.50	
	9.	Guest of the agent.		
	10.	Hack, Osage to Chautauqua	2.50	
	11.	Hotel bill, Chautauqua, vou. 4	3.00	
		Transfer, self and baggage, hotel to depot	.50	
		Transportation order No. 270, Chautauqua to Kansas City, via., Chicago, Kansas and Western Railroad.		
		Dinner, Ottawa, Kans	.75	
		Railway Guide	.35	
		Transportation order No. 271, Kansas City to Yankton, Dak., via Missouri Pacific.		
		Supper, Kansas City	.90	
		Sleeper, Kansas City to Omaha	2.00	
		Porter on sleeper	.25	
		Extra baggage at depot	.30	
	12.	Breakfast at Omaha, waiting for Sioux City train	.95	
		Extra baggage at depot	.30	
		Dinner, Emerson, Nebr	.75	
		Supper, Sioux City	.90	
		Transfer, self and baggage, across Missouri River from train to depot, Sioux City	.75	
		Self and baggage, depot to hotel, Yankton	.50	
		Lunch, Yankton, 11.30 p. m	.75	
	13.	Telegram to Indian agent at Lower Brulé from Yankton, 25 words	.25	
		Telegram to postmaster, Chamberlain, for mail from Yankton, 25 words	.25	
	22.	Hotel bill, Yankton, vou. 5	19.00	
		Transfer, self and baggage, to Northwestern depot from hotel	.50	
		Transportation order No. 272, Yankton to Helena.		
		Breakfast, Centreville, Dak	.50	
		Dinner, Huron	.50	
		Supper, Jamestown, Dak	.50	
		Lodging, waiting connections, vou. 6	.75	
	23.	Sleeper, Jamestown, Dak., to Helena, Mont	5.50	
		Breakfast, dining car, Northern Pacific Railroad	.75	
		Dinner, dining car, Northern Pacific Railroad	.75	
		Supper, dining car, Northern Pacific Railroad	.75	
	24.	Breakfast, dining car, Northern Pacific Railroad	.75	
		Dinner, dining car, Northern Pacific Railroad	.75	
		Sleeping-car porter, Northern Pacific Railroad	.25	
		Transfer, self and baggage, depot to hotel, at Helena, only conveyance being carriages	1.00	
	25.	Hotel bill, Helena, including hack to depot, vou. 7	3.00	
		Transportation order No. 273, Helena to Missoula.		
		Transfer self and baggage, depot, Missoula, to hotel	.50	

1888.		Henry M. Marchant—Continued.		
Nov.	25.	Telegram, Indian agent at Arlee from Missoula, 25 words.	$0.25	
	26.	Telegram, Indian agent at Arlee from Missoula, 25 words.	.25	
	28.	Hotel bill, Missoula, vou. 8	8.25	
	29, 30.	Guest of Indian agent.		
		Jurat	.25	
				253.35
		Henry M. Marchant:		
Dec.	31.	For services as special agent from Dec. 1 to 31, 1888, dates inclusive, 31 days, at $6 per day	186.00	
		For expenses actually and necessarily incurred as per following statement:		
	1, 2, 3.	Guest, Flathead Agency, Montana.		
	4.	Transportation order, No. 311, Arlee to Missoula.		
		Dinner on dining car	.75	
	19.	Hotel, Missoula, Mont., vou. 1	44.25	
		Transportation order, No. 312, Missoula to Washington.		
		Sleeping car, Missoula to St. Paul, Minn	9.00	
		Transfer self and baggage, hotel, Missoula, to Northern Pacific Railroad depot	.50	
		Breakfast, dining car	.75	
		Dinner, dining car	.75	
		Supper, dining car	.75	
	20.	Breakfast, dining car	.75	
		Dinner, dining car	.75	
		Supper, dining car	.75	
	21.	Breakfast, dining car	.75	
		Dinner, dining car	.75	
		Supper, St. Paul, Minn	1.10	
		Necessary porterage	.25	
		Sleeping car, St. Paul to Chicago	2.00	
		Necessary porterage	.25	
	22.	Breakfast at Chicago	.95	
		Sleeping car, Chicago to Washington	5.00	
		Dinner on buffet car	.85	
		Supper on buffet car	.80	
	23.	Breakfast on Pennsylvania Railroad dining car, Altoona to Harrisburg	1.00	
		Dinner at Harrisburg (waiting for train)	.90	
		Supper, Pennsylvania Railroad depot, Baltimore	.80	
		Necessary porterage	.25	
		Transfer self and baggage, Pennsylvania Railroad depot to residence, 11 p. m	1.00	
		Jurat	.25	
				261.90
1889.		Henry M. Marchant:		
Jan.	31.	For services as special agent from Jan. 1 to 31, 1889, dates inclusive, 31 days, at $6 per day		186.00
		Henry M. Marchant:		
Feb.	28.	For services as special agent from Feb. 1 to 28, dates inclusive, 28 days, at $6 per day		168.00
		For expenses actually and necessarily incurred, as per following statement:		
	10.	Transfer self and baggage, house to Pennsylvania Railroad	.75	
		Transportation order No. 313, via Pennsylvania Railroad, Washington, D. C., to Cherry Vale, Kans.		
		Sleeping-car, Washington to St. Louis, Mo	5.60	
		Supper on buffet car	.90	
	11.	Breakfast, Pittsburgh, Pa	.75	
		Dinner, Columbus, Ohio	.75	
		Supper, Richmond, Ind	.75	
		Railway Guide and map	.35	
		Sleeping-car porter	.25	
	12.	Breakfast, St. Louis, Mo	.75	
		Baggage	.30	
		Seat in parlor car, St. Louis to Kansas City	1.00	
		Porter, parlor car, for handling baggage	.25	
		Dinner, buffet car	.85	

1889.		Henry M. Marchant—Continued.		
Feb.	12.	Supper, buffet car	$0.75	
		Transfer self and baggage, Kansas City, depot to Hotel Midland	.75	
	13.	Bill Midland Hotel, Kansas City, vou. 1	2.00	
		[Missed connection here for Cherry Vale and lay over.]		
		Transfer self and baggage, Midland Hotel to Atchison, Topeka and Santa Fé depot	.75	
		Dinner, Ottawa, Kans	.50	
		Supper, Independence, Kans	.50	
		Railroad fare, Cherry Vale to Chautauqua, Kans	1.27	
		Transfer self and baggage, depot to hotel, Chautauqua	.50	
		Lodging, hotel, Chautauqua	.50	
	14.	Breakfast, hotel, Chautauqua	.50	
		Stage fare, Chautauqua to Pawhuska, Osage Agency	1.50	
		Dinner, station	.50	
		Pawhuska, Osage Agency:		
		Supper	.50	
	15.	Breakfast	.50	
		Dinner	.50	
		Supper	.50	
	16.	Breakfast	.50	
		Dinner	.50	
		Supper	.50	
	17.	Breakfast	.50	
		Dinner	.50	
		Supper	.50	
	18.	Breakfast	.50	
		Dinner	.50	
		Supper	.50	
	19.	Breakfast	.50	
		Dinner	.50	
		Supper	.50	
	20.	Breakfast	.50	
		Dinner	.50	
		Supper	.50	
	21.	Breakfast	.50	
		Dinner	.50	
		Supper	.50	
	22.	Breakfast	.50	
		Dinner	.50	
		Supper	.50	
	23.	Breakfast	.50	
		Dinner	.50	
		Supper	.50	
	24.	Breakfast	.50	
		Dinner	.50	
		Supper	.50	
	25.	Breakfast	.50	
		Dinner	.50	
		Supper	.50	
	26.	Breakfast	.50	
		Dinner	.50	
		Supper	.50	
	27.	Breakfast	.50	
		Dinner	.50	
		Supper	.50	
	28.	Breakfast	.50	
		Dinner	.50	
		Supper	.50	
		Room rent, two weeks, vou. 2	6.00	
		Jurat	.25	
				$218.42
		Henry M. Marchant:		
Mar.	31.	For services as special agent from Mar. 1 to 31, 1889, dates inclusive, 31 days, at $6 per day	186.00	
		For expenses actually and necessarily incurred, as per following statement:		
	1.	Breakfast, 50 cents; dinner, 50 cents; supper, 50 cents; at Osage Agency	1.50	

1889. Henry M. Marchant—Continued.

Mar.	2. Breakfast, 50 cents; dinner, 50 cents; supper, 50 cents; at Osage Agency	$1.50
	3. Breakfast, 50 cents; dinner, 50 cents; supper, 50 cents; at Osage Agency	1.50
	4. Breakfast, 50 cents; dinner, 50 cents; supper, 50 cents; at Osage Agency	1.50
	5. Breakfast, 50 cents; dinner, 50 cents; supper, 50 cents; at Osage Agency	1.50
	6. Breakfast, 50 cents; dinner, 50 cents; supper, 50 cents; at Osage Agency	1.50
	7. Breakfast, 50 cents; dinner, 50 cents; supper, 50 cents; at Osage Agency	1.50
	8. Breakfast, 50 cents; dinner, 50 cents; supper, 50 cents; at Osage Agency	1.50
	9. Breakfast, 50 cents; dinner, 50 cents; supper, 50 cents; at Osage Agency	1.50
	10. Breakfast, 50 cents; dinner, 50 cents; supper, 50 cents; at Osage Agency	1.50
	11. Breakfast, 50 cents; dinner, 50 cents; supper, 50 cents; at Osage Agency	1.50
	12. Breakfast, 50 cents; dinner, 50 cents; supper, 50 cents; at Osage Agency	1.50
	13. Breakfast, 50 cents; dinner, 50 cents; supper, 50 cents; at Osage Agency	1.50
	14. Breakfast, 50 cents; dinner, 50 cents; supper, 50 cents; at Osage Agency	1.50
	15. Breakfast, 50 cents; dinner, 50 cents; supper, 50 cents; at Osage Agency	1.50
	16. Breakfast, 50 cents; dinner, 50 cents; supper, 50 cents; at Osage Agency	1.50
	17. Breakfast, 50 cents; dinner, 50 cents; supper, 50 cents; at Osage Agency	1.50
	18. Breakfast, 50 cents; dinner, 50 cents; supper, 50 cents; at Osage Agency	1.50
	19. Breakfast, 50 cents; dinner, 50 cents; supper, 50 cents; at Osage Agency	1.50
	20. Breakfast, 50 cents; dinner, 50 cents; supper, 50 cents; at Osage Agency	1.50
	21. Breakfast, 50 cents; dinner, 50 cents; dinner, 50 cents; at Osage Agency	1.50
	22. Breakfast, 50 cents; dinner, 50 cents; supper, 50 cents; at Osage Agency	1.50
	23. Breakfast, 50 cents; dinner, 50 cents; supper, 40 cents; at Osage Agency	1.50
	24. Breakfast, 50 cents; dinner, 50 cents; supper, 50 cents; at Osage Agency	1.50
	25. Breakfast, 50 cents; dinner, 50 cents; supper, 50 cents; at Osage Agency	1.50
	26. Breakfast, 50 cents; dinner, 50 cents; supper, 50 cents; at Osage Agency	1.50
	Rent of room 3 weeks and 4 days, at $3 per week, vou. 1	10.50
	Hack from Osage Agency to Chautauqua, Kans., stage.	1.50
	27. Hotel bill, Chautauqua; vou. 2	1.50
	Self and bag. Chautauqua to depot	.50
	Transportation order No. 314, Chautauqua to Kansas City.	
	Dinner, Chanute, Kans	.50
	Supper, Kansas City, Mo	.85
	Baggage	.30
	Transportation order No. 315, Kansas City to Washington, D. C., via Missouri Pacific.	
	Sleeper, Kansas City to St. Louis, Mo	2.00
	Sleeping-car porter	.25
	28. Breakfast, St. Louis	.75
	Check, baggage, waiting for train	.30
	Sleeper, St. Louis to Harrisburg, Pa	5.00
	Lunch in buffet-car	.85
	Dinner, Indianapolis, Ind	.75
	Supper, Columbus, Ohio	.75

1889.		Henry M. Marchant—Continued.		
Mar.	29.	Breakfast, dining-car, Altoona to Harrisburg	$1.00	
		Porter, sleeping car	.25	
		Dinner, Harrisburg, 75 cents; supper, 75 cents	1.50	
		Check, baggage, waiting for train 4 hours	.30	
		Transfer self and baggage, Pennsylvania depot to residence	.50	
		Jurat	.25	
				$255.10
		Henry M. Marchant:		
Apr.	30.	For services as special agent from Apr. 1 to 30, 1889, dates inclusive, 30 days, at $6 per day		180.00
		Henry M. Marchant:		
May	31.	For services as special agent from May 1 to 31, 1889, dates inclusive, 31 days, at $6 per day	186.00	
		For expenses actually and necessarily incurred, as per following statement:		
	9.	Self and baggage, house to Pennsylvania depot	1.00	
		Transportation order No. 337, to Missoula, Mont		
		Sleeping car, Washington to Chicago	5.00	
	9.	Supper on buffet car	.90	
	10.	Breakfast, Pittsburgh, Pa	.75	
		Lunch on buffet car	.85	
		Dinner, Crestline, Ohio	.75	
		Supper, Chicago	1.10	
		Sleeping-car porter	.25	
		Sleeper, Chicago to St. Paul	2.00	
	11.	Breakfast, dining car	.75	
		Dinner, dining car	.75	
		Sleeping-car porter	.25	
		[Missed connection and lay over until the 12th.]		
		Self and baggage, depot to Hotel Ryan	.50	
	12.	Hotel bill, Hotel Ray, vou. 1	3.25	
		Self and baggage, Rayan Hotel to St. Paul depot	.50	
		Sleeping car, St. Paul to Missoula, Mont	9.00	
		Supper, dining car	.75	
	13.	Breakfast, dining car	.75	
		Dinner, dining car	.75	
		Supper, dining car	.75	
	14.	Breakfast, dining car	.75	
		Dinner, dining car	.75	
		Supper, dining car	.75	
		Sleeping-car porter	.50	
		Self and baggage, depot to hotel, Missoula, Mont	.50	
		Lunch, Missoula, 11 o'clock night	.70	
	15.	Hotel bill, Missoula, vou. 2	3.00	
		Self and baggage, hotel to Northern Pacific depot	.50	
		Transportation order No. 338, Missoula to Arlee.		
		Seat in sleeper	.75	
		Supper, dining car	.75	
	16 to 31.	Guest of the Indian agent, and as he would not receive pay for my board, I purchased at different times provisions amounting to	19.75	
				245.30

EXHIBIT F. 10.—SUPPORT OF CONVICTS.

1888.		John S. Crocker:		
July	11.	Railroad fare for three officers, viz, Benton Russ, W.W. Skinner, and S. McFarland, going in charge of 10 convicts from Washington, D. C., to the Albany County Penitentiary, New York, at $10.35	31.05	
		Railroad fare for 10 convicts from Washington, D. C., to the Albany County Penitentiary, at $10.35	103.50	
	12.	Breakfast in New York for three	2.10	
		Dinner in Albany for three	1.50	
		Steam-boat fare for three officers returning from Albany to New York	7.50	
	13.	Breakfast in New York for three	1.50	
		Railroad fare for three officers from New York to Washington, D. C., at $6.50	19.50	

1888.				
		John S. Crocker—Continued.		
July	13.	Express charge on irons	$0.90	
		One affidavit	.25	
				$167.80
		John S. Crocker:		
Sept.	24.	Railroad fare for two officers, viz, Benton Russ and William C. Crocker, going in charge of two convicts from Washington, D. C., to the Albany County Penitentiary, at Albany, N. Y., at $10.35	20.70	
		Railroad fare for two convicts from Washington, D. C., to the above-mentioned penitentiary, at $10.35	20.70	
	25.	Breakfast in New York for two	1.25	
		Dinner in Albany for two	1.50	
		Steam-boat fare from Albany, N. Y., to New York for two	5.00	
	26.	Breakfast in New York for two	1.25	
		Railroad fare from New York to Washington for two	13.00	
		Express charge on irons	.40	
		Jurat	.25	
				64.05
		John S. Crocker:		
Nov.	15.	Railroad fare for three officers, viz: William C. Crocker, Joseph Torrens and J. B. Torrens, going in charge of 10 convicts from Washington, D. C., to the Albany County Penitentiary, at Albany, N. Y., at $10.35	31.05	
		Railroad fare for 10 convicts from Washington, D. C., to the said Albany County Penitentiary, at $10.35	103.50	
		Lunch at Washington for three	.35	
	16.	Breakfast in New York for three	2.40	
		Lunch at Poughkeepsie for three	.30	
		Dinner at Albany for three	2.65	
		Steam-boat fare from Albany, N. Y., to New York City for three officers returning	8.50	
	17.	Breakfast in New York for three	2.10	
		Dinner in New York for three	2.50	
		Railroad fare from New York to Washington, D. C. for three officers	19.50	
		Lunch at Wilmington for three	.40	
		Express charge on irons	1.00	
		One affidavit	.25	
				174.50
		John S. Crocker:		
	30.	Railroad fare for three officers, viz, William C. Crocker, J. W. Graham, and William Walters, going in charge of 10 prisoners from Washington, D. C., to the Albany County Penitentiary, at Albany, N. Y., at $10.35	31.05	
		Railroad fare for 10 persons from Washington, D. C., to the Albany County Penitentiary, at Albany, N. Y., at 10.35	103.50	
		Lunch at Wilmington	.25	
Dec.	1.	Breakfast in New York for three	2.20	
		Lunch at Poughkeepsie for three	.40	
		Dinner at Albany for three	2.85	
		Steam-boat fare for three officers returning from Albany to New York	8.50	
	2.	Breakfast in New York for three	1.95	
		Dinner in New York for three	2.65	
		Railroad fare for three officers from New York to Washington, D. C	19.50	
		Express charge on irons	1.00	
		Affidavit to account	.25	
				174.10
		John S. Crocker:		
	19.	Railroad fare for three officers, viz, W. C. Crocker, James Woodward, and J. T. Ward, going in charge of 10 convicts from Washington, D. C., to the Albany County Penitentiary, at Albany, N. Y., at $10.35	31.05	
		Railroad fare for 10 convicts from Washington, D. C., to the Albany County Penitentiary, at Albany, N. Y., at $10.35	103.50	

1888.		John S. Crocker—Continued.		
Dec.	19.	Lunch at Wilmington for three	$0.50	
	20.	Breakfast in New York for three	2.15	
		Lunch at Poughkeepsie for three	.30	
		Dinner at Albany for three	2.70	
		Railroad fare for three officers returning from Albany, N. Y., to New York City, at $3.10	9.30	
	21.	Hotel expenses in New York City for three	5.40	
		Street-car fare in New York City	.10	
		Dinner in New York for three	2.50	
		Railroad fare for three officers from New York to Washington, D. C., at $6.50	19.50	
		Lunch at Wilmington for three	.40	
		Express charges on irons	1.00	
		Jurat	.25	
				$178.65
1889.		John. S. Crocker:		
Jan.	31.	Railroad fare for three officers, viz, William E. Crocker, L. Merry, and Willis F. Crocker, going in charge of 10 convicts, Washington, D. C., to the Albany County Penitentiary, at Albany, N. Y., at $10.35	31.05	
		Railroad fare for 10 convicts, Washington, D. C., to the Albany County Penitentiary, at Albany, N. Y. at $10.35	103.50	
		Lunch at Wilmington for three	.75	
Feb.	1.	Breakfast in New York for three	1.75	
		Telegram from New York to Albany	.20	
		Lunch at Poughkeepsie for three	.85	
		Dinner at Albany for three	2.65	
		Railroad fare from Albany, N. Y., to New York City for three officers returning	9.30	
	2.	Hotel expenses in New York for three	5.80	
		Dinner in New York for three	2.50	
		Railroad fare for three officers from New York City to to Washington, D. C., at $6.50	19.50	
		Lunch at Wilmington for three	.60	
		Express charges on irons	.95	
		One affidavit	.25	
				179.65
		John S. Crocker:		
	20.	Railroad fare for three officers, viz, W. C. Crocker Thomas Johnson, and Sidney McFarland, going in charge of 10 convicts from Washington, D. C., to the Albany County Penitentiary, at Albany, N. Y., at $10.35	31.05	
		Railroad fare for 10 convicts from Washington, D. C., to the Albany County Penitentiary at Albany, N. Y., at $10.35	103.50	
		Lunch at Wilmington for three	.50	
	21.	Breakfast in New York for three	2.75	
		Telegram from New York to Albany	.25	
		Lunch at Poughkeepsie for three	.55	
		Dinner at Albany for three	2.80	
		Hotel expenses at Albany for one	1.50	
		Railroad fare from Albany to New York City for three officers returning, at $3.10	9.30	
	22.	Hotel expenses in New York for two	4.10	
		Dinner in New York for three	2.60	
		Railroad fare from New York to Washington, D. C., for three, at $6.50	19.50	
	24.	Express charge on irons	.90	
		One affidavit	.25	
				179.55
		John S. Crocker:		
Mar.	27.	Railroad fare for 3 officers, viz, W C. Crocker, J. H. Graham, and C. M. Heller, going in charge of 10 convicts from Washington, D. C., to the Albany County Penitentiary at Albany, N. Y., at $10.35	31.05	
		Railroad fare for 10 convicts from Washington, D. C., to the said Albany County Penitentiary at Albany, N. Y.	103.50	
		Lunch at Wilmington	.30	
	28.	Breakfast in New York for three	2.10	

1889.		John S. Crocker—Continued.		
Mar.	28.	Telegram from New York to Albany	$0.25	
		Lunch at Poughkeepsie for three	.50	
		Dinner in Albany for three	2.75	
		Steam-boat fare for 3 officers returning from Albany to New York	8.50	
	29.	Breakfast in New York for three	2.15	
		Dinners in New York for three	2.35	
		Railroad fare for 3 officers from New York to Washington, D. C	19.50	
		Express charge on irons	.90	
		Affidavit	25	
				$174.10
		John S. Crocker:		
April	4.	Railroad fare for 2 officers, viz, William C. Crocker and Charles Peters, going in charge of 6 convicts from Washington, D. C., to the Albany County Penitentiary at Albany, N. Y., at $10.35	20.70	
		Railroad fare for 6 convicts from Washington, D. C., to the Albany County Penitentiary at Albany, N. Y., at $10.35	62.10	
		Lunch at Wilmington for two	.25	
	5.	Breakfast in New York City for two	1.75	
		Telegram from New York to Albany	.25	
		Lunch at Poughkeepsie for two	.35	
		Dinner at Albany for two	1.60	
		Steam-boat fare for 2 officers returning from Albany to New York City	5.00	
	6.	Breakfast in New York City for two	1.40	
		Dinner in New York City for two	1.80	
		Railroad fare for 2 officers from New York to Washington, D. C	13.00	
		Express charge on irons	.70	
		Affidavit	.25	
				109.15
		John S. Crocker:		
	16.	Railroad fare for 3 officers, viz, W. C. Crocker, James Woodward, and Joseph Torrens, going in charge of 9 prisoners from Washington, D. C., to the Albany County Penitentiary, at Albany, N. Y., at $10.35	31.05	
		Railroad fare for 9 prisoners from Washington, D. C., to the Albany County Penitentiary, at Albany, N. Y., at $10.35	93.15	
		Lunch at Wilmington for three	.35	
	17.	Breakfast in New York for three	2.20	
		Telegram from New York to Albany	.20	
		Lunch at Poughkeepsie for three	.40	
		Dinner at Albany for three	2.75	
		Steam-boat fare for 3 officers returning from Albany to New York	8.50	
	18.	Beakfast in New York for three	2.30	
		Dinners in New York for three	2.70	
		Railroad fare for 3 officers from New York to Washington, D. C., at $6.50	19.50	
		Express charge on irons	.90	
		One affidavit	.25	
				164.25
		John S. Crocker:		
	21.	Railroad fare for 2 officers, viz, William C. Crocker and John T. Ward, going in charge of 5 prisoners from Washington, D. C., to the Albany County Penitentiary, at Albany, N. Y., at $10.35	20.70	
		Railroad fare for 5 prisoners from Washington, D. C., to the Albany County Penitentiary, at Albany, N. Y., at $10.35	51.75	
		Lunch at Wilmington for two	.30	
	27.	Breakfast in New York for two	1.40	
		Telegram from New York to Albany	.20	
		Lunch at Poughkeepsie for two	.55	
		Dinner at Albany for two	1.70	

1889.		John S. Crocker—Continued.		
Apr.	27.	Steam-boat fare for 2 officers returning from Albany to New York	$5.00	
	28.	Breakfast in New York for two	1.50	
		Dinner in New York for two	2.00	
		Railroad fare from New York City to Washington, D. C., for 2 officers	13.00	
		Express charges on irons	.80	
		One affidavit	.25	
				$99.15
		John S. Crocker:		
May	10.	Railroad fare for 3 officers, viz, William C. Crocker, J. Coleman, and John Ward, going in charge of 8 prisoners from Washington, D. C., to Albany County Penitentiary, at Albany, N. Y., at $10.35	31.05	
		Railroad fare for 8 prisoners from Washington, D. C., to the Albany County Penitentiary, at Albany, N. Y., at $10.35	82.80	
		Lunch at Wilmington for three	.35	
	11.	Lunch at New York for three	.50	
		Lunch at Poughkeepsie for three	1.65	
		Dinner at Albany for three	2.65	
		Steam-boat fare for 3 officers returning from Albany to New York City	8.50	
	12.	Breakfast in New York for three	2.25	
		Railroad fare, New York to Washington, D. C., for 3 officers	19.50	
		Express charges on irons	1.05	
		One affidavit	.25	
				153.25
		John S. Crocker:		
	22.	Railroad fare for 3 officers, viz, W. C. Crocker, J. H. Graham and D. Coughlin, going in charge of 7 prisoners, Washington, D. C., to the Albany County Penitentiary, at Albany, N. Y., at $10.35	31.05	
		Railroad fare for 7 prisoners from Washington, D. C., to the Albany County Penitentiary, at Albany, N. Y., at $10.35	72.45	
		Lunch at Wilmington for three	.25	
	23.	Breakfast in New York for three	1.90	
		Telegram from New York to Albany	.20	
		Lunch at Poughkeepsie for three	.30	
		Dinner in Albany for three	2.85	
		Steam-boat fare for 3 officers returning from Albany to New York	8.50	
	24.	Breakfast in New York for three	2.05	
		Dinner in New York for three	2.80	
		Railroad fare for 3 officers from New York to Washington, D. C	19.50	
		Express charges on irons	.85	
		One affidavit	.25	
				142.95
		John S. Crocker:		
June	17.	Railroad fare for 2 officers, viz, W. C. Crocker and Sidney McFarland, in charge of 6 prisoners going from Washington, D. C., to the Albany County Penitentiary, at Albany, N. Y., at $10.35	20.70	
		Railroad fare for 6 prisoners from Washington, D. C., to the Albany County Penitentiary at Albany, N. Y., at $10.35	62.10	
		To the railroad depot in Washington (hire of horse)	1.50	
		Lunch at Poughkeepsie for two	.40	
		Dinner at Albany for two	1.85	
		Hotel expenses at Albany for one	1.50	
	18.	Steam-boat fare for 1 officer returning from Albany to New York City	3.50	
	19.	Railroad fare for 1 officer returning from Albany to New York City	3.10	
		Breakfast in New York City for two	1.60	
		Dinner in New York City for two	2.00	

John S. Crocker—Continued.

	Street-car fare in New York City for two	$0.10	
	Railroad fare for 2 officers from New York City to Washington, D. C	13.00	
	Express charge on irons	.85	
	One affidavit	.25	
			$114.60

EXHIBIT F 11.—FURNITURE AND REPAIRS.

8.	Charles A. Bruff:		
2.	Repairing type-writer stand	1.75	
	Repairing revolving chair, and furnishing nut and seat.	3.75	
	Repairing and caning back of revolving chair, and furnishing seat and nut	5.65	
	Repairing and caning back of revolving chair	5.25	
	Repairing revolving chair, and furnishing nut and seat.	3.40	
	Re-upholstering sofa-seat in imitation of leather	8.50	
	Repairing revolving chair, and furnishing spring, spider, and Yale casters	4.85	
10.	Repairing revolving chair, and furnishing casters	.75	
	Repairing four chairs, and furnishing casters	4.00	
	Repairing revolving chair, and furnishing two rods and casters	2.25	
	Repairing desk, and furnishing casters, brass hinges, and brass locks	5.25	
Aug. 3.	Repairing type-writer stand and 4 drawers	2.00	
	Making over one leather cushion	2.75	
	Repairing chair, and furnishing casters	1.00	
	Caning back of revolving chair	2.25	
	Making and putting lid on box, and hauling	1.50	
16.	Taking down map canopy	1.75	
	Repairing screen	1.50	
	Repairing and altering case	12.50	
	Repairing, scraping, and varnishing, and covering double desk with best B. B. cloth	20.00	
	Furnishing and putting on 4 brass drawer locks	4.00	
	Furnishing materials and covering sofa in imitation leather	16.50	
20.	Furnishing material and covering chair seat in imitation leather	3.75	
	Scraping, varnishing, repairing, and recovering double desk with best B. B. billiard cloth	18.00	
	Repairing and varnishing book-case, and furnishing lock	5.75	
23.	Furnishing materials, and making, and hanging 4 best holland shades	12.40	
	Repairing chair	.75	
	Rehanging map canopy, and furnishing copper wire and screens	4.50	
			1
	Julius Lansburgh:		
30.	One Senate chair (revolving)		
	Charles A. Bruff:		
Sept. 10.	Repairing and making over seat of 2 arm-chairs, and furnishing casters	7.00	
	Repairing and making over seat of 1 chair	2.25	
	Repairing and caning back of chair, and furnishing nut and spider	3.75	
	Repairing hat-rack stand	.50	
	Repairing chair and casters	1.75	
	Repairing and making over seat of leather sofa	7.50	
12.	Repairing revolving chair, and furnishing spider, etc	3.85	
	Making over seat in leather	2.50	
	Repairing and covering desk, etc	15.00	
	Repairing and re-upholstering seat and back of 2 chairs	6.50	
15.	Making leather cushion	4.00	
	Making walnut screen, French plate-glass	11.75	
	Making and hanging 4 Scotch holland shades	12.00	
	Repairing 2 shades	.75	
	Opening desk drawer and fitting key	1.50	

	Julius Lansburgh—Continued.		
15.	Opening desk and putting on 4 locks	$5.50	
	Repairing 3 revolving chairs	6.00	
	Repairing 1 arm-chair	.75	
			$92.85
	Charles A. Bruff:		
10.	Repairing and caning revolving chair	2.50	
	Repairing and caning revolving chair	3.00	
	Repairing revolving chair and furnishing leg and set of casters	2.25	
	Furnishing brocatelles and cord and grip and re-upholstering large Turkish arm-chair	32.50	
			40.25
	Charles A. Bruff:		
12.	Repairing window-shade	.75	
	Furnishing and putting lock on desk drawer	1.25	
	Repairing book stand	1.25	
22.	Repairing base and cornice of case and fitting 2 keys	2.75	
	Making 2 sets of pigeon-holes in case	25.00	
			31.00
	Charles A. Bruff:		
5.	Putting hooks in wardrobe	.65	
	Repairing one chair	.75	
	Repairing 2 chairs and furnishing 2 spring spiders	7.50	
	Making over seat of chair	1.50	
			10.40
	George W. Gates:		
16.	One No. 3 walnut table		16.00
	George Breitbarth:		
20.	1 walnut revolving chair	7.50	
	1 walnut revolving chair	6.50	
			14.00
1889.	C. K. Judson:		
15.	1 case drawers, black walnut		55.00
	Charles A. Bruff:		
3.	Upholstering seat of revolving chair	1.75	
5.	Recovering and varnishing large table and furnishing and putting on 2 drawer locks and repairing drawers	5.75	
	Making and hanging 5 Scotch holland window-shades with linen fringe	12.50	
7.	Re-upholstering seat and back of revolving chair in leather	4.50	
	Repairing the base of the same	1.25	
8.	Re-upholstering seat of revolving chair in red leather	3.50	
	Furnishing nut and screw for same	2.50	
9.	Repairing base of 1 chair	.75	
	Repairing chair and furnishing spider and nut	3.75	
10.	Reseating 1 chair	.65	
	Re-upholstering seat of revolving chair in imitation leather	2.00	
15.	Re-upholstering lounge in leather	25.50	
			64.40
	Charles A. Bruff:		
4.	Repairing revolving chair and furnishing casters	1.75	
14.	Repairing revolving chair and furnishing nut and casters	2.75	
	Furnishing materials and making plate-glass screen	18.50	
	Making stationery case	7.25	
			30.25
	Charles A. Bruff:		
18.	Repairing revolving chair	1.75	
	Repairing and reseating chair	1.00	
	Repairing and reseating chair and nut	2.75	
20.	Repairing desk and furnishing lock	12.50	
	Repairing and covering desk	15.00	
			33.00
	Gore, Janney & Co.:		
25.	No. 11 file cabinet	10.50	
	One 2-foot and two 1½-foot desk-racks	4.50	
			15.00

1889.		Geo. Breitbarth:		
Mar.	12.	One revolving office chair	$6.50	
		One revolving office chair	6.00	
				$12.50
		R. W. Henderson:		
	15.	5¾ pieces velvet, at $1.75	10.07	
		144 feet ½-inch gilt bead, at 6 cents	8.64	
		104 feet ½-inch gilt bead, at 6 cents	6.24	
				24.95
		W. B. Moses & Son:		
Feb.	4.	Cont. S. S. antique chair	6.00	
		Ant. oak Danner revolving book-case	16.00	
Mar.	15.	Ant. oak mirror	3.00	
				25.00
		Thomas Folks:		
	25.	Repairing office chair	1.00	
		Repairing hall chair	1.25	
Apr.	1.	Furnishing shelf pins	.25	
		Removing railing around chief clerk's desk and making and hanging gate	14.00	
	8.	Making 2 pair office steps for library	9.50	
		Making 3 pair office steps for library	12.00	
	9.	Repairing 2 pair office steps	2.00	
				40.00
		Wyckoff, Seamans & Benedict:		
May	15.	1 roll-top desk		65.00
		W. B. Moses & Son:		
Apr.	11.	1 antique oak revolving book-case		16.00
		John W. Walling:		
June	29.	1 lounge, leather covered and stuffed		35.00
		C. K. Judson:		
		One 20-roller metallic book-case		40.00

BOOKS FOR DEPARTMENT LIBRARY.

1888.		William B. Stewart:		
July	16.	The Encyclopædic Dictionary, vol. 7, part 1		3.00
		W. H. Lowdermilk & Co.:		
	1.	Harris's Contracts of Married Women	5.75	
		Duke of York's Laws	2.00	
		Waterman on Corporations, 2 volumes	11.50	
		Barton's (Va.) Chancery Practice, 2 volumes	12.00	
		Court of Claims Reports, vol. 11	3.00	
		Wallace's United States Reports, vols. 1, 2, 3, 4, 5, 7, 10, 12	14.00	
		Sherman & Redfield on Negligence, 2 volumes	11.00	
		Black on Tax Titles	4.00	
		Barbour on Payments	5.75	
		Speer on Removal of Causes	2.00	
		Mackey's Practice, District of Columbia	10.00	
		Wandell's Law of Inns	3.50	
		Kulp's Pennsylvania Reports, vol. 4	5.00	
		Carey's Digest, Washington and Oregon Reports	7.50	
		Jones on Liens, 2 volumes	11.00	
		Endlich on Construction of Statutes	5.75	
		Mathews' Digest of Land Decisions	6.00	
				119.75
		M. E. Mann:		
Aug.	8.	The Earth and its Inhabitants, Africa, vol. 3, by Elisee Reclus	7.00	
		The Annual Cyclopædia, new series, 1887, vol. 12	6.00	
		Appleton's Cyclopædia of American Biography, vol. 4	6.00	
				19.25
		W. H. Lowdermilk & Co.:		
July	1.	Virginia Statutes—Herring, 3 vols	9.00	
		North Carolina Laws, 1831 to 1834	2.50	
		Virginia Revised Code, 1819, 2 vols	2.50	
		Virginia Acts of Assembly, 1832	1.25	
		New York Revised Laws, 1802, 2 volumes—New York Session Laws, 36th to 41st. session, 1831–'41	10.00	
				25.25

	W. H. Morrison:		
18.	Minnesota Reports, vol. 79	$4.50	
	Texas Reports, vol. 68	4.75	
	Pennsylvania Reports, vol. 116	2.25	
	New York Reports, Hun, vol. 53	3.50	
	Law Review	3.00	
	Maryland Reports, vol. 67	4.50	
	California Reports, vol. 72	3.75	
	Missouri Appeals, Reports, vols. 25, 26, and 27	10.50	
	Encyclopædia Britannica, vol. 23	8.00	
	Indiana Reports, vols. 111 and 112	8.00	
	New Mark on Bank De, osits	3.00	
	Texas Court of Appeals, vol. 24	4.75	
	New York Reports, vol. 107	1.50	
	Blatchford's Reports, vol. 24	6.00	
	Federal Restraints	3.50	
	Paine on Elections	8.00	
	Massachusetts Reports, vol. 145	6.00	
	Patent Estate	3.00	
	United States Digest, vol. 18	6.00	
	Virginia Reports, vol. 81	2.80	
	Jones and Spencer, vol. 22	6.00	
	Poterbaugh's Pleadings and Practice	6.50	
	Michigan Reports, vol. 61	3.50	
	Gillet's Criminal Law	6.50	
	Poterbaugh's Chancery	6.50	
	New York Reports, vol. 108	1.50	
	Colorado Reports, vol. 10	4.75	
	Connecticut Reports, vol. 25	3.50	
	Indiana Reports, vol. 113	4.00	
	Missouri Appeals Reports, vol. 28	3.50	
	Oregon Reports, vol. 15	6.00	
	California Reports, vol. 73	3.75	
	Texas Appeals Reports, vol. 25	4.75	
	Missouri Appeals Reports, vol. 29	3.50	
	Texas Reports, vol. 67	4.75	
			$166.30
	Little, Brown & Co.:		
2.	1 McClain's Iowa Digest, 2 vols	13.00	
	1 New York Equity Reports, vol. 42	3.50	
	1 New York Appeal Reports, vol. 106	1.50	
	1 Abbott's New Cases, vol. 19	4.50	
	1 Demarist's Reports, vol. 5	5.50	
	1 North Carolina Reports, vols. 96 and 97	6.00	
	1 Pennsylvania County Court Reports, vols. 2 and 3	10.00	
	1 North Carolina Digest, vol. 6 (Seymour)	4.50	
	1 Rice's South Carolina Digest, S. H	18.00	
	1 Thomas's South Carolina Digest	7.00	
	1 Mackey's District of Columbia Reports, vol. 5	5.50	
	1 Haskell's Reports, vol. 1	6.00	
	1 Bates's Limited Partnership	3.00	
	1 Tennessee Reports, vol. 85	3.50	
	1 Sansum and Berryman's Insurance Digest, 2 vols	13.00	
	1 Trial Glasgow Bank Directory	1.50	
	1 Ewell's Medical Jurisprudence, sheep	3.00	
	1 Foster's Federal Judiciary Acts	1.25	
	1 Gray's False Marking of Merchandise	1.05	
	1 Harr & Bemis Police Ordinance	4.00	
	1 Knapp's Partitions	5.50	
	1 Morrill's City Neg	3.50	
	1 P. and S. Trade-Mark Cases	7.50	
	1 American Corporation Cases, vol. 10	5.00	
	1 Redfield Railways, 2 vols	10.50	
	1 Vermont Reports, vol. 59	3.75	
	1 Pennsylvania County Reports, vol. 1	5.00	
	1 English Reports, L. E. A. S. and Ind. and App., 1887, 9 vols., half calf	43.75	
	1 Biglow Frauds	5.25	
	1 Bates's Partnership, 2 vols	11.00	
	1 Law Times Reports, in nos., 1888	18.80	

Little, Brown & Co.—Continued.

2.	1 Georgia Reports, vol. 76	$4.00	
	1 Iowa Reports, vol. 72	3.00	
	1 Index, Massachusetts Statutes	2.00	
	1 Michigan Reports, vol. 61	3.25	
	1 Missouri Reports, vols. 92 and 93	6.00	
	1 Nebraska Reports, vol. 22	3.00	
	1 New Jersey Equity Reports, vol. 43	3.50	
	1 New York Civil Practice Reports, vol. 13	4.00	
	1 New York Criminal Practice Reports, vol. 5	5.00	
	1 North Carolina Reports, vol. 98	3.00	
	1 Philadelphia Reports, vol. 16	4.25	
	1 Rhode Island Reports, vol. 15	5.50	
	1 Wisconsin Reports, vol. 69	2.50	
			$283.8

Charles Albert:

Oct. 17.	Journals of Congress, containing their proceedings from Sept. 5, 1774, to Nov. 3, 1788, 13 vols	20.00	
	The Diplomatic Correspondence of the United States, 1783–1789, 7 vols	10.50	
			30.5

George N. Rider:

29.	Appleton's Cyclopædia of American Biography, vol. 5	6.00	
	Indexed Digest of United States Supreme Court Reports	10.00	
			16.0

Charles C. Soule:

23.	Arkansas, Revised Statutes, 1837	2.00	
	California, Acts 1854, General Laws, 2 vols., 1865, 3 at $2	6.00	
	Connecticut, Revised Statutes, 1821; Public Laws, 1835; Public Laws, 1838, 1839, 1840, 1846, 6 at $1.50	9.00	
	Delaware, Acts 1815	2.00	
	Florida, Acts 1885	2.00	
	Indiana, Revised Statutes, 1831	2.00	
	Maine, Acts and Reports, 1840, 1841, 1845, 1848, 1862, 5 at $1.50	7.50	
	Maryland, Acts, 1822, 1825, 2 at $1.50	3.00	
	Massachusetts, Acts and Reports, 1856	1.50	
	Michigan, Acts, 1837, special 1837, regular 1838, 2 at $1.50	3.00	
	Mississippi, Acts 1840, Revised Code 1824, 2 at $1.50	3.00	
	New York, Acts 1851	1.50	
	Pennsylvania, Acts 1826, 1827	2.00	
	New Jersey, Acts 1849, 1850, 1851, 1852, 1857, 1860, 1863, 7 at $1.50	10.50	
	Ohio, Acts 1815, 1823, 1836, 3 at $2	6.00	
	Virginia, Acts 1824	2.50	

W. H. Lowdermilk & Co.:

Nov. 24.	Lindley on Partnership, 2 vols	5.00	
	Morse on Banking, 2 vols	11.00	
	Landlord and Tenant, District of Columbia	1.00	
	Elliott, Work of the Advocate	5.75	
	Myers' Federal Decisions, vol. 2, patents	12.00	
	Jones' Chattel Mortgages	5.50	
	Annual Register 1837, 1865, 29 vols	14.50	
	Roscoe's Criminal Evidence, 2 vols	10.50	
	Abbott's New Practice, 2 vols	12.50	
	Clifford and Stephens Practice Cases	3.50	
	Wait on Insolvent Corporations	5.75	
	Wharton's Law of Evidence, 2 vols	11.00	
	Simond's Digest of Patent Cases	9.50	

W. H. Lowdermilk & Co.:

	Alabama, Session Laws, 1835, 1836; Arken's Digest, 1836; Extra Session, 1837, Nov. 1837, 1839, 1840, 1841, Nov. 1841; Clay's Digest, 1843; Laws, Dec, 1843, 1844, 1849	25.0	
	Delaware Laws, vols. 1 and 2, 1700 to 1797, vol. 9, special sessions, 1835, 1836, 1837, 1839, 1841, 1843; vol. 10, 1847, 1849; vol. 12, 1861	30.0	
	Louisiana Laws, 1870	1.2	

W. H. Lowdermilk & Co.—Continued.

24.	Maine Laws, Smith, 3 vols., 1821–'31	$6.00
	Maine Acts and Resolves, 1861	1.50
	Maryland Laws, 1821, 1823, 1832, and 1833	6.00
	Michigan Compiled Laws, 2 vols., 1857	3.00
	New Jersey Laws, 1870	1.50
	Ohio Laws, vol. 29, 1831	1.25
	Ohio Laws, 1877, 1878, 1879, 1881, and 1882	6.75
	Ohio Laws, 1880 and 1883	2.50
	Pennsylvania Laws, 1800	1.50
	Virginia Laws, 1798	2.00
	Virginia Code, 1808	2.50
	Maryland Laws, 1819, 1827, 1828, 1830, 1831, 1834, 1835, and 1836	10.00
	Pennsylvania Laws, 1801 to 1825, inclusive; 1827 to 1851, inclusive; 1853, 1857, and 1860	183.00
	New York Laws, 1834 and 1857; 2 vols., 3 vols	5.50
	New Jersey Laws, 1853, 1856, 1858, 1861, 1862, 1864, 1865, 1866, 1869, 1877, 1880, 1881, 1882, 1883, 1884, and 1885	24.00
	Ohio Laws, 1805, 1807, 1809, 1810, 1811, 1814, 1815, 1817, 1818, 1819, 1820, 1821, 1822, 1823, 1825, 1826, 1827, 1828, 1829, 1830, 1832, 1833, 1834, 1835, 1836, 1837, 1838, 1839, 1852, and 1853	74.50
		$38

George D. Sproul:

21. Personal Memoirs of P. H. Sheridan, General U. S. Army, vols 1 and 2

The F. H. Thomas Law Book Company:

20. Alabama: Acts, 1823, 1824, 1825–6, 1827–8, 1828–9, 1829–30, 1830–1, and 1851–2; Statutes, 1833 and 1852; 10 vols.
Arkansas: Acts, 1842–3, 1844–5, 1848–9, 1852–3, 1854–5, and 1868–9; 6 vols.
California: Acts, 1860, 1865–6, 1867–8, 1869–70, and 1871–2; 5 vols.
Connecticut: Acts, M., 1796; O., 1796; O., 1797; M., 1798; O., 1810; M., 1811; O., 1811, and M., 1831; Public, 1841, 1842, 1851, and 1854; 4 vols.; 1856, Statutes 38; 17 vols.
Delaware: Acts, 1816, 1825 and 1869; Statutes, 1852; 4 vols.
Florida: Acts, 1838, 1839, 1846–7, 1847–8, and 1881; 5 vols.
Georgia: Acts, 1837, 1839, 1840, 1842, 1860, 1861, 1865–6, 1866, 1869, 1871–2, and 1873; Statutes, 1837 and 1851; 13 vols.
Illinois: Acts, 1831; Special, 1837 and 1843; Private, 1859; Private, 1869, 4th vol.; 5 vols.
Indiana: Acts, 1828 and 1834; General, 1835, 1839, 1840, 1843, and 1845; Statutes, 1838; 8 vols.
Iowa: Acts, Statutes, 1860; 1 vol.
Kentucky: Acts, 1811–12, 1821, 1822, 1824, 1834, 1836–7, 1847–8, 1848–9, and 1853–4, 2 vols.; 1863–4 and 1865, 2 vols.; 1871–2; Statutes, 1860, 2 vols.; 18 vols.
Louisiana: Acts, 1819, 1826, 1828, 1829, 1830, 1831, 1832, 1833, 1864–5, 1865, and 1866; Civil Code, 1838; 12 vols.
Maine: Acts, Public, 1832; Public, 1836; Public, 1838; Public, 1839; Private, 1837; Private, 1838; Private, 1839; Resolutions, 1834; Resolutions, 1837; Resolutions, 1838; Resolutions, 1839; Acts and Reports, 1857 and 1867; 13 vols.
Maryland: Acts, 1824 and 1826; Maxey, 3 vols.; 5 vols.
Massachusetts; Acts, Jan., 1821; May, 1828, 1833, 1834, and 1845; 5 vols.
Michigan: Acts, 1855; General, 1867, 1 vol.; 1869, 3 vols.; 1870; Statutes, 1838; 7 vols.
Minnesota: Acts, 1861 and 1862; Executive, 1862, 1863, and 1864; General, 1868, 1870, 1871, 1877, and 1878; 10 vols.
Mississippi: Acts, 1833, 1836, 1838, 1839, 1841, 1842, 1856, 1856–7, 1857, 1858, and 1862–3; Feb., 1865 and 1870; Statutes, 1824 and 1838; Statutes, 1848; 15 vols.

The F. H. Thomas Law Book Company—Continued.

20. New Hampshire: Acts, J., 1816, 1817, and 1819; N., 1820, 1821, and 1824; J., 1825 and 1831; J., 1832; N., 1832; J., 1833; N., 1836; J., 1838; J., 1843; J., 1844; N., 1844; J., 1845; J., 1846; J., 1847; J., 1848, 1849, and 1858; 11 vols.; 1864 and 1874; Statutes, 1815; 34 vols.
New York: Acts, 1820, 1821, and 1828; 3 vols.
Tennessee: Acts, Public, 1831, 1845–6, 1847–8, 1851–2, 1853–4, 1855–6, 1857–8, 1865, and 1865–6; Statutes, 1831; 2 vols.; 11 vols.
Texas: Acts, 1836–7 and 1837; General, 1859 and 1860; General, 1861; General, 1866; Special, 1873; Codes, 1857; 2 vols.; Statutes, 1859: 9 vols.
Vermont: Acts, 1817, 1818, 1819, 1820, 1822, 1825, 1828, 1831, 1833, and 1834; 10 vols.
Virginia: Acts, May, 1813 and 1836–7; 2 vols.
West Virginia: Acts, 1861–2, 1862–3, and 1872; 3 vols.
231 volumes, at $2 each $462.00

T. S. Cole:

Dec. 11. Arizona Laws, 1877, 1 vol.....
Illinois Laws, Private, 1869, vols. 1 and 3, 2 vols.....
Kentucky Laws, 1838–'9, 1 vol.....
Louisiana Laws, 1867, 1868, 1869, 3 vols. Code of Practice 1870, 1 vol.....
Maine Laws, 1846, 1849, 1854, 1855, 1856, 5 vols.....
Michigan Laws, 1849, 1 vol.....
Minnesota Laws, General, 1866, 1869, 1872, 1873, 1874, 1875, 1876, 7 vols .....
Tennessee Laws, 1867–'8, 1 vol.....
Virginia Laws, 1811–'12, 1825–'6, 1827–'8, 3 vols; 25 volumes, at $2 each..... 50.00

P. J. Lalor:

1889.
Feb. 5. 1 copy of Knight's New Mechanical Dictionary, bound in sheep, published 1884..... 10.00

The D. B. Canfield Co.:

9. The American Law Register, subscription for one year, from January, 1888, to December, 1888..... 5.00

R. R. Morris:

19. The Encyclopædic Dictionary, vol. 7, part 2 ..... 3.00

M. E. Mann:

21. The Earth and its Inhabitants.....
Africa, vol. 4, by Elisee Reclus $7.00
Appleton's Cyclopædia of American Biography, vol. 6.. 6.00 13.

Banks & Brothers:

18. 1 Dallas's Compilation Laws of Pennsylvania, 2 vols., folio, 1700-1789 ..... 11.

Charles C. Soule:

1888.
Dec. 12. Weekly Reporter, 35 vols., 1852–1887 ..... 17.

W. H. Morrison:

Oct. 12. Sawyer, vol. 12 ..... 6.00
Wisconsin Reports, vol. 70 ..... 3.00
18. Virginia Reports, vol. 82..... 2.80
Kentucky Reports, vol. 84..... 4.50
20. Edmond Randolphe..... 3.00
27. Lewis on Eminent Domain..... 6.00
Law Review..... 1.00
Nov. 1. Reynolds' Stephens Digest..... 2.50
Nibloch on Insurance..... 3.00
6. Indiana Reports, vol. 114 ..... 4.00
7. Wisconsin Reports, vol. 75 ..... 3.50
Iowa Reports, vol. 73 ..... 4.00
10. Miller on Sales..... 3.50
12. Wisconsin Reports, vol. 71 ..... 3.00
24. Encyclopædia Britannica, vol. 24 ..... 8.00
Dec. 17. Massachusetts Reports, vol. 146 ..... 3.25

888.		W. H. Morrison—Continued.		
‹.	20.	Life of Governor Morris, 2 vols	$7.50	
	26.	Virginia Reports, vol. 83	2.80	
	28.	New York Reports, vol. 110	1.50	
	31.	New York Reports, Hun, vol. 49	3.50	
		Maryland Reports, vol. 68	4.50	
889.				
‹.	2.	California Reports, vol. 74	3.75	
	21.	Woods on Landlord and Tenant	10.00	
		Reeves on Domestic Relations	5.00	
		Desty's Federal Procedure	3.00	
	22.	Law Review	1.00	
	26.	Abbott's New Cases, vol. 21	6.00	
		King's Tennessee Digest, vol. 4	6.00	
›.	9.	Maine Reports, vol. 80	4.50	
		Schouler's Executors and Administrators	5.00	
	11.	Pennsylvania, vol. 121	2.50	
		Thompson on Jury Trials, 2 vols	12.00	
	12.	Rae's Criminal Procedure	2.75	
	19.	Texas Reports, vol. 70	4.75	
		Utah Reports, vol. 2	6.00	
	20.	Iowa Statute, 2 vols	10.00	
	26.	Michigan Reports, vol. 63	3.50	
		Wisconsin Reports, vol. 72	3.00	
r.	1.	Oregon Reports, vol. 16	6.00	
	9.	California Reports, vol. 75	3.75	
	16.	Iowa Reports, vol. 74	4.00	
		Missouri Appeal Report, vol. 31	3.50	
	20.	Colorado Reports, vol. 11	4.75	
		Statesman's Year Book, 1889	2.50	
	22.	Anderson's Law Dictionary	7.00	
	23.	Texas Appeal Court Reports, vol. 26	4.75	
				$205.85
888.		Charles C. Potts:		
r.	9.	Beath's History of the Grand Army of the Republic		4.50
		Little, Brown, & Co.:		
r.	5.	1 English Statutes, 1888, half calf		7.75
		Carswell & Co.:		
y	16.	Quebec Law Reports and postage, vol. 13	5.18	
	31.	Ontario Reports, vol. 14, and postage	5.30	
r.	5.	Ontario Appeal Reports, vol. 14, and postage	5.26	
›.	13.	Ontario Reports, vol. 15, and postage	5.26	
889.				
‹.	18.	Supreme Court Reports, Canada, vol. 14, and postage	5.28	
	9.	Subscription to Canada Law Times, 1889	5.00	
				31.28
888.		Stevens & Haynes:		
›.	10.	Law Magazine, November, 1882, and postage	1.50	
		Irish Reports, vols. 19 and 20, in calf, and postage	18.50	
		Law Magazine, February, May, August, November, 1888, and postage	5.50	
				25.50
		Houghton, Mifflin & Co.:		
g.	10.	1 vol., 7, N. & C. History of America, sheep	6.50	
889.				
r.	20.	1 vol., 1, N. & C. History of America, sheep	6.50	
				13.00
888.		B. Westermann & Co.:		
y	7.	1 Vierteljahrsschr. Gesetzgebung, XI	4.00	
	25.	1 Revue de Droit internat., 1888	4.40	
‹.	24.	1 Centralblatt f. Rechtswiss., VIII	3.60	
r.	15.	1 Vierteljahrsschr. Gesetzgebung, XII	4.00	
889.				
y	2.	1 Revue de Droit internat., 1889	4.40	
				20.40
		William B. Matthews:		
ıe	6.	2 copies of Matthew & Conway's Interior Department Land Decisions, at $6		12.00

1889.		J. H. Jickcox:		
June	8.	Subscription to Monthly Catalogue of U. S. Government Publications from July, 1888, to June, inclusive, 1889		$5.00
		W. H. Lowdermilk:		
		The following books, viz:		
		Freeman on Executors, 2 vols	$11.00	
		Complete Digest, vol. 1	5.00	
		Holt on Jurisdiction of Courts	3.00	
		Thornton's Indiana Practice Code	6.00	
		Mackey's District of Columbia Reports, vols. 5 and 6	12.00	
		Abbott's National Digest, vol. 5	6.25	
		Hare's Court Law, 2 vols	11.00	
		Schouler on Executors	5.25	
		Wharton's Criminal Pleading	5.50	
		Indiana Digest, vol. 3	7.25	
		Bryce's American Commonwealth, 2 vols	5.40	
		Delaware Chancery Reports, vol. 5	8.00	
		Complete Digest, vol. 2	5.00	
		Todd's British Colonies	5.00	
		Bishop's Non-Contract Law	6.00	
		Supplement to Stimson's Statute Law	1.00	
		West Virginia Reports, vol. 30	3.50	
				106.15
		M. E. Mann:		
	7.	Annual Cyclopedia, new series, vol. 13, 1888		6.00
		West Publishing Company:		
	29.	Subscription to Federal Reports, 1 year, to June 29, 1889	10.00	
		Annual Digest, 1887 and ex	8.45	
				18.45
		The Boston Book Company:		
April	23.	Subscription to Law Journal, Report 1888, vol. 57		17.50
		W. H. Morrison:		
June	6.	New York Reports, Court of Appeals, vols. 111 and 112	3.00	
		New York Reports, Supreme Court, Hun, vols. 50 and 51	7.00	
		Law Review, March and April, 1889	1.00	
		Connecticut Reports, vol. 56	3.50	
		Schouler's History of the United States, vols. 3 and 4	3.22	
	10.	Pennsylvania State Reports, vol. 122	2.25	
	11.	New York Law Reports, vol. 50	4.00	
	16.	Index to Encyclopedia Britannica, ninth edition	6.00	
		Bishop on Non-Contract	5.75	
		Mississippi Reports, vol. 65	6.00	
				41.72
		Joel White:		
	20.	18th vol. Alabama Reports, new series		25.00

BOOKS FOR OFFICE OF SOLICITOR.

1888.		The Forum Publishing Company:		
July	5.	Subscription to the Forum from July 1, 1888, to June 30, 1889		5.00
		John S. Rich:		
		Digest of U. S. Supreme Court Reports, 2 vols		10.00
		West Publishing Company:		
		American Digest, 1887, annual, vol. 1		6.45
		J. Buchanan Henry:		
	2.	Messages of President Buchanan		1.50
		W. F. Morse:		
Aug.	9.	One Gaskell's Atlas, half-seal Russia		10.00
		W. H. Lowdermilk:		
July	2.	Sherman & Redfield on Negligence, 2 vols	11.00	
	6.	Law of Infants, Parent and Child, Guardian and Ward	3.50	
		Lewin on Trusts, vol. 1	1.25	
	23.	Lindley on Partnership, vol. 1	1.25	
				17.00

	W. H. Morrison:		
2.	Blatchford's Reports, vol. 24	$6.00	
	Federal Restraints	3.50	
	Michigan Reports, vol. 61	3.50	
6.	New York Reports, vol. 108	1.50	
	Walker's American Law	6.00	
10.	Jones and Spencer, vols. 20, 21, 22	18.00	
	New York Reports, Hun, vol. 47	3.00	
	Ohio Reports, vols. 41, 42	5.00	
	Connecticut Reports, vols. 53, 54	7.00	
	New Jersey Law Reports, vols. 46, 47, and 48	10.50	
	Mississippi Reports, vols. 63 and 64	12.00	
13.	Rhode Island Reports, vols. 12, 13, 14, and 15	26.00	
16.	New Hampshire Reports, vols. 58 to 63 inclusive	21.00	
	Indiana Reports, vol. 88	4.00	
23.	Missouri Reports, vols. 91, 92, and 93	10.50	
	Indiana Reports, vol. 113	4.00	
			$141.50
	M. E. Mann:		
18.	Appleton's Cyclopædia of American Biography, vol. 4		7.00
	W. C. and F. P. Church:		
1.	Subscription to the "Internal Revenue Record and Customs Journal," from July 1, 1888, to June 30, 1889, inclusive		5.00
	W. H. Lowdermilk & Co.:		
4.	Jones on Liens, 2 vols	11.00	
13.	Linden on Trusts and Trustees, 2 vols	1.25	
			12.25
	W. H. Lowdermilk & Co.:		
4.	Endlech on the Interpretation of Statutes	5.75	
	Matthews and Conway's Digest of Land Decisions	5.70	
8.	Lindley on Partnership, vol. 2	1.25	
24.	Morse on Banks and Banking	11.00	
			23.70
	W. H. Morrison:		
1.	Oregon Reports, vol. 15	6.00	
10.	California Reports, vol. 73	3.75	
2.	Louisiana Annual, vols. 32 to 39 inclusive, $12 each	96.00	
			105.75
	W. H. Morrison:		
12.	Sawyer's Reports, vols. 11 and 12	12.00	
	Wisconsin Reports, vol. 70	3.00	
22.	Missouri Reports, vol. 94	3.50	
			18.50
	G. N. Rider:		
26.	Appleton's Cyclopædia of American Biography, vol. 5		7.00
	W. H. Lowdermilk & Co.:		
4.	Benjamin on Sales, vol. 1	1.25	
22.	Jones on Chattel Mortgages	5.50	
27.	Lewis on Eminent Domain	6.00	
			12.75
	George B. Sproul:		
1.	One set Sheridan's Memoirs		9.00
	Robert Beall:		
23.	Encyclopædia Britannica, vol. 24, half Russia		10.00
	W. H. Lowdermilk & Co.:		
12.	Smith's Leading Cases, vol. 1	1.25	
16.	Waite on Insolvent Corporations	6.00	
27.	Abbott's Forms of Practice, 2 vols	10.00	
	Benjamin on Sales, vol. 2	1.25	
			18.50
	W. H. Morrison:		
6.	Indiana Reports, vol. 114	4.00	
7.	Missouri Reports, vol. 95	3.50	
	Iowa Reports, vol. 73	4.00	
12.	Wisconsin Reports, vol. 71	3.00	
17.	Michigan Reports, vol. 62	3.50	
			18.00

1888.		Little, Brown & Co.:		
Nov.	30.	One copy Elmes on Customs, in calf		$5.00
1889.		G. P. Putnam's Sons:		
Jan.	17.	One copy of Christy's Proverbs, 2 vols		5.00
1888.		W. H. Morrison:		
Dec.	17.	Massachusetts Reports, vol. 146	$3.25	
	28.	New York Reports, vol. 110	1.50	
	31.	New York Reports (Hun), vol. 49	3.50	
		Maryland Reports, vol. 68	4.50	
1889.				
Jan.	2.	California Reports, vol. 74	3.75	
				16.50
1888.		W. H. Lowdermilk & Co.:		
Dec.	17.	Sheldon on Subrogation	2.50	
1889.				
Jan.	5.	Smith's Leading Cases, vol. 2	1.25	
	25.	Mackey's Supreme Court Reports, D. C., vol. 6	6.00	
				9.75
		George N. Rider:		
Apr.	9.	Cyclopædia of Biography, vol. 6		7.00
		Robert Beall:		
	12.	Index to Encyclopædia, Britannica, half Russia		8.00
		West Publishing Company:		
May	15.	American Annual Digest, 1888	6.45	
		Federal Reporter, No. 5, vol. 36	.50	
				6.95
		W. H. Morrison:		
June	25.	1 Illinois Reports, vol. 123		2.90

STATIONERY.

1888.		V. G. Fisher:		
July	25.	1 blank book	1.50	
Aug.	4.	200 Bristol-board cards	1.40	
				2.90
		Detre & Blackburn:		
	28.	5 reams Crane's parchment, deed, No. 37, at $5.54; 5 reams note, No. 29, at $1.96	37.50	
		6 reams Arion 6 note	6.40	
		1 dozen parchment sheets, 17 by 22, at 38 cents	4.56	
		500 tablets, 1644, $2.68; 100 scratch blocks, 4070, $21.70	35.10	
		150 tablets, 1460, at $12; 2 dozen Underwood's Egyptian, quarts, at $4.30	26.90	
		1 dozen Underwood's Cobalt, quarts, $6.47; 1 dozen David's scarlet, pints, $5.97	12.44	
		1 dozen large erasers, $1.49; 1 dozen small erasers, 65 cents	2.14	
		2 dozen folders, 10 inch, at $4.18; ½ dozen shears, 12 inches, at $9.89	13.31	
		1½ dozen shears, 10 inches, at $7.47; 6 great gross 11 bands, $4.74 lot	15.94	
		6 great gross bands, No. 12, $5.30 lot; 6 great gross 14 bands, $6.40 lot	11.70	
		2 great gross bands, No. 15, $2.29 lot; 6 great gross 16 bands, $7.44 lot	9.73	
		1 great gross bands, No. 28, $2.50 lot; 2 great gross 31 bands, $6.84 lot	9.34	
		2 great gross bands, No. 8, $1.20 lot; 2 great gross .00½ bands, $10.48 lot	11.68	
		2 great gross bands .000½, $12.68 lot; 1 gross gutta-percha holders, No. 3, $10.96	23.64	
		1 gross gutta percha holders, No. 1	8.63	
		½ dozen 10-inch folders, delivered, at $4.18	.35	
				229.36
		V. G. Fischer:		
Sept.	17.	1 ream Crane's parchment vellum paper	4.00	
		500 Crane's parchment vellum envelopes	6.80	
				10.80

V G. Fischer—Continued.

28.	50 linen-lined envelopes, 11½ by 4½, 4½ cents each			$2.25
	Detre & Blackburn:			
4.	7 thousand McGill's fasteners		$16.60	
	5 thousand staple fasteners		6.93	
	4 pounds sealing wax, at 23 cents		.92	
	3 dozen each Eagle holders, at 23 and 24 cents		1.41	
	12 dozen pyramid pins, No. 3, at 65 cents		7.80	
	4 gross Eagle hexagon at $3.82, and 1 gross Eagle round at $2.86		18.14	
	5 gross Faber's hexagon pencils, at $5.60		28.00	
	2 gross Eagle hexagon No. 2, at $3.82		7.64	
	2 gross Faber's hexagon pencils, 1 each, 3 and 4, at $5.60		11.20	
	1 gross American hexagon, assorted		4.19	
	3 gross Eagle color pencils, at $4.66		13.98	
	3 dozen Pomeroy's No. 1 mucilage, at $1.47		4.41	
5.	15 reams Weston's letter, at $3.33		49.95	
	5 reams, 30 by 40, manilla, at $6.74		33.70	
10.	3½ rolls parchment, 19 by 29, at $29.50		98.34	
13.	5 reams parchment vellum note, at $3.50	$17.50		
	2 reams parchment vellum note, at $3.50	7.00		
	2½ thousand azure bar envelopes, at $6	15.00		
	2 thousand white envelopes, at $6	12.00		
		51.50		
	Less 15 per cent	7.73		
			43.77	
	3 thousand manilla envelopes, $8\frac{3}{0}$, at $10		30.00	
	2 thousand manilla envelopes, $5\frac{3}{0}$, at $9.50		19.00	
				395.98
	Detre & Blackburn:			
21.	4½ reams type-writer paper, Brown's, $\frac{8}{0}$, at $3.82			15.76
	Easton & Rupp:			
17.	3 thousand white envelopes, No. 8½, at $2.95		8.85	
	1 dozen quarts Arnold's fluid		4.00	
	½ dozen quarts Stephen's fluid, at $6.50		1.62	
	½ gross Dixon's pencils, at $4.50		2.25	
	1 dozen Eagle erasers, large		1.16	
	1 dozen Eagle erasers, small		.60	
21.	1 dozen quarts Antoine's copying-ink		4.50	
	2 dozen knife erasers, Cocoa, at $3.60		7.20	
	1 great gross rubber bands, .00½		9.55	
28.	5 reams commercial note, unmarked, at $1		5.00	
1.	2 reams Belfast linen, at $2.80		5.60	
6.	5 thousand bristol cards, 3⅜ by 2, at 57 cents		2.85	
	3 reams Pirie's octavo note, at $3		9.00	
	50 cap tablets, Manilla, at 10 cents		5.00	
17.	3 thousand linen-lined envelopes, No. 12, at $26.60		79.80	
				146.98
	William Ballantyne & Son:			
7.	1 gross legal pens		.90	
20.	1 gross Miller pens		.60	
23.	¼ great gross bands, No. 16, at $2.34		1.17	
28.	Blank book		.75	
	Blank book		.85	
1.	¼ ream Pirie's note, at $3.35		1.68	
	⅛ thousand Pirie's envelopes, 5 by 4, at $6.75		.82	
11.	2 thousand manilla envelopes, special, at $3.50		7.00	
16	$\frac{1}{16}$ dozen quart M. and N. ink, at $3.30		.55	
18.	2 thousand XXX No. 16 envelopes, at $1.45		2.90	
	½ thousand XXX No. 11 envelopes, at $2.90		1.45	
	10 quarts M. and N. ink, at $3.30		2.75	
	4 dozen spools tape, at $2.35		9.40	
	200 sheets carbon paper, at 2½ cents		5.00	
	24 gross steel pens, at 49 cents		11.76	
	7 thousand No. 5 envelopes, at $1.30		9.10	
	5 dozen quarts Stickwell's mucilage, at $6.15		30.75	
	1 gross Esterbrook pens, No. 347		.49	
	6 gross Esterbrook pens, No. 048, at 49 cents		2.94	

1888.		William Ballantyne & Son—Continued.		
Aug.	18.	2 gross Esterbrook pens, No. 79, at 49 cents	$0.98	
		1 gross L. and P. pens, No 12	.49	
	23.	2 gross L. and P. pens. No. 2, at 49 cents	.98	
		9 gross Gillott pens, No. 404, at 49 cents	4.41	
		5 gross Miller pens, No. 4, at 49 cents	2.45	
		3 gross Jacob pens, No. 705, at 49 cents	1.47	
		3 gross Miller pens, No. 4, at 49 cents	1.47	
	27.	15 reams Crane's bond letter, No. 29, at $3.75	56.25	
	30.	3 gross bands, No. 16, at $1.50 great gross	.38	
		5 thousand envelopes, No. 6¼, at $1.48	7.40	
		10 thousand envelopes, No. 9, at $2.18	21.80	
		8 thousand envelopes, No. 10, at $2.65	21.20	
Sept.	1.	3 reams Treasury blotter, No. 100, at $14.13	42.39	
		4 dozen sheets oil board, 10 by 12, at 40 cents	1.60	
		2,540 bond envelopes, No. 29, 5 by 4, at $5.50	13.97	
	5.	1 ream cap paper	2.60	
	6.	3 gross steel pens, at 49 cents	1.47	
		10 reams type writer paper, 6½ pounds, at $1.58	15.80	
		1 gross Pratt pens	1.00	
	10.	1 dozen inkstands, No. 303	8.25	
		1 gross Chase pens, commercial	.49	
		2 gross Chase pens, legal, at 49 cents	.98	
	12.	1 dozen quarts Knapp's ink	6.00	
	15.	1 ream Bisad bill cap	2.25	
				$306.94
		William Ballantyne & Son:		
July	25.	Pint David's scarlet ink	.65	
Sept.	14.	1½ thousand Pirie's envelopes, at $3.75	5.63	
				6.28
		William Ballantyne & Son:		
	28.	1 gross Chase pens	.90	
Oct.	4.	2 boxes quills, at 35 cents	.70	
	11.	20 reams letter paper, 14 pounds, at $2.70	54.00	
	20.	1 pound sponge	.80	
Nov.	15.	22 box envelopes, at 6 cents	1.32	
		24 box envelopes, at 3 cents	.72	
	22.	1 gross Esterbrook pens, No. 314	.75	
	24.	1 gross Esterbrook pens, No. 284	.75	
	29.	2 Hartman inkstands, at $1	2.00	
				61.94
		William Ballantyne & Son:		
	3.	3 reams flat letter paper, at $2.25		6.75
		Detre & Blackburn:		
	2.	1 dozen Underwood's cobalt quarts, writing	4.80	
		2 dozen Underwood's black copy ribbons, at $8.74	17.48	
				22.28
		Detre & Blackburn:		
Dec.	20.	100 sheets parchment, 19 by 25, 1½ rolls, at $29.50		49.16
		Easton & Rupp:		
Sept.	29.	100 sheets Weston's imperial ruled	7.50	
Oct.	25.	5 reams unruled note, at $1	5.00	
Nov.	3.	1 dozen bankers' inkstands	8.25	
Dec.	10.	9 dozen silk taste, at 65 cents	5.85	
				26.60
		John F. Paret:		
Aug.	25.	1 dozen manifold, 8 by 13	1.50	
Nov.	2.	2 dozen manifold, No. 1, 8 by 13	1.92	
				3.42
		T. & J. W. Johnson & Co.:		
Dec.	10.	3 gross J. W. Clothier's manilla pens	4.50	
		Mail, postage paid	.12	
				4.62
		Mars Cassidy:		
	12.	1 blank book, bought Oct. 16, 1888		1.25
1889.		The V. G. Fischer Art and Stationery Company:		
Jan.	24.	3 boxes red seal wafers	.75	
		1 dozen sticks red sealing-wax, at 15 cents	1.80	
				2.55

	The V. G. Fischer Art and Stationery Company.		
30.	Stamping one-half ream of paper and 1 box envelopes		$3.00
	Wm. Ballantyne & Son:		
5.	1 pound sponge	$80	
	1 ball twine	12	
	6 gross Esterbrook's No. 314 pens, at 68 cents	4.08	
6.	3 thousand No. 6¼ envelopes, at $1.48	4.44	
7.	4 pounds sponge, at 80 cents	3.20	
	1 gross Esterbrook No. 048 pens	.49	
15.	1 dozen Moore's blotters	3.50	
17.	1 fountain sponge cup	.44	
18.	12 daily memorandum calendars, at 25 cents	3.00	
19.	½ dozen blank books, at $2.40	1.20	
	½ dozen blank books, at $2.40	1.20	
	½ dozen blank books, at $5.40	2.70	
21.	$\frac{1}{12}$ dozen blank books	3.37	
22.	1 dozen Hartman inkstands	11.25	
27.	1 gross Esterbrook pens No. 81	.54	
	1 blank book	.50	
			40.83
	Wm. Ballantyne & Co.:		
22.	½ ream note paper, at 4 cents	2.00	
	½ thousand envelopes, at 8 cents	2.00	
	24 pieces erasive rubber, at 6 cents	1.44	
			5 44
	Wm. Ballantyne & Son:		
4.	12 daily memorandum calendars, at 25 cents	3.00	
	1 gross gold stub pens	.49	
10.	2 gross Miller No. 4, at 60 cents	1.20	
	6 mucilage stands, at 40 cents	2.40	
11.	6 blank books, at 50 cents	3.00	
15.	1 ream cap paper	2.60	
16.	1 gross No. 404 pens	.56	
19.	1 dozen pyramid pins	.69	
	1 thousand manilla envelopes	4.50	
			18.44
	Nathan & Wright:		
21.	1 dozen bottles perfect mucilage		1.75
	S. Gugenheim:		
27.	1 quart London extra ink	1.00	
4.	1 quart London extra ink	1.00	
16.	1 stationery rack	4.00	
	1 stationery rack	3.50	
			9.50
	The V. G. Fischer Art and Stationery Company:		
3.	600 largest size red seals, at 30 cents		1.80
	The V. G. Fischer Art and Stationery Company:		
9.	1 gross Gillott's pens, 885	1.25	
13.	1,500 impressions from steel die	9.00	
			10.25
	Easton & Rupp:		
28.	1 case oval-ring paper	10.50	
8.	1 quarto journal	2.00	
			12.50
	Type-writer Ribbon Company:		
16.	1 dozen crown band black indelible copying ribbons for Remington type-writer		9.00
	Detre & Blackburn:		
10.	3 great gross, 16 bands, at $1.24	3.72	
	2 dozen pyramid pens, at 65 cents	1.30	
	2 reams parchment vellum commercial note, No. 70, at $3.50, less 15 per cent	5.95	
	1 thousand envelopes to match, $6, less 15 per cent	5.10	
			16.07
	John F. Paret:		
19.	500 cards for Attorney-General		4.88

H. Jacobs:

889. y 8. 4 gross pens, at $2 ..... $8.00
3 gross pens, No. 708, at $2 ..... 6.00 $14.00

John C. Parker:

pr. 26. ½ dozen bone handle steel knife erasers 3.00

William Ballantyne & Son:

lar. 1. ½ thousand Pirie's bar. No. 2 envelopes 2.50
14. 6 pairs shears, 12-inch, at 95 cents 5.70
21. ½ thousand envelopes, 3 by 4½, at $4 ..... 2.00
27. 2 reams 6-pound note paper, at $1.50 ..... 3.00
28. 1 mucilage stand ..... .40
April 5. 2 thousand envelopes, No. 10, at $2.65 ..... 5.30
11. 1 gross silverine pens ..... .90
15. 2 thousand envelopes, No. 6¾, at $1.48 ..... 2.96
26. 3 bottles stylographic ink, at 20 cents ..... .60
May 1. 1 gross Esterbrook's pens, No. 347 ..... .68
4. 2 newspaper files, at 55 cents 1.10
1 dozen rubber penholders 1.20 26.34

William Ballantyne & Son:

April 5. 6 rolls red tape, at 35 cents 2.10

E. Morrison:

May 4. 100 pasteboard tubes, 20 by 1¾ 2.50

Wyckoff, Seamans & Benedict:

9. 4 reams Walbridge extra heavy letter paper, as per order No. 21, at $2.10 ..... 8.40

William Ballantyne & Son:

23. 2 gross Esterbrook No. 048 pens, at 54 cents 1.08
2 gross Spencerian pens, at 90 cents 1.80
1 gross Gillott, No. 390 pens ..... .56
25. 1 gross Miller No. 4 pens ..... .60
31. 2 reams 6-pound note paper, at $1.50 ..... 3.00 7.04

William Ballantyne & Son:

15. 2 quarts Stephens copying fluid, at 75 cents 1.5

V. G. Fischer, manager:

June 29. 5 reams parchment vellum note ..... 17.

OFFICIAL TRANSPORTATION.

Samuel G. Eberly:

1888. July 13. 641 street-car tickets for use of Department of Justice, at 3 3/10 cents 2

John Wells:

31. Hauling 24 loads ashes from engine-room, Department of Justice, for month of July, 1888, at 40 cents .....

William H. Wright:

Aug. 24. Hauling one load of books from Department of Justice to the City Hall, Post-office, and Capitol .....

John Wells:

Sept. 1. Hauliug 18 loads of ashes from engine-room, Department of Justice, for the month of August, 1888, at 40 cents .....

Samuel G. Eberly:

3. 641 street-car tickets for use of Department of Justice, at 3 3/10 cents .....

Washington and Georgetown Railway Company:

5. 120 street-car tickets for use of Department of Justice .....

W. H. Wright:

14. Hauling books from Department of Justice to Government Printing Office .....

John Wells:

29. Hauling 15 loads ashes from Department of Justice, building during month of September, 1888, at 40 cents .....

888. Samuel G. Eberly:
b. 11. 641 street-car tickets for use in the Department of Justice, at 3 9/10 cents $25.00

Wm. H. Wright:
13. Hauling books from Department of Justice to Government Printing Office 1.00

John Wells:
31. Hauling 14 loads of ashes and 8 loads of plaster during the month of Oct., 1888, 22 loads, at 40 cents 8.80

Wm. H. Wright:
29. Hauling one load of books from Department of Justice to city post-office 1.50

Samuel G. Eberly:
v. 22. 641 street-car tickets for use of Department of Justice, at 3 9/10 cents 25.00

John Wells:
c. 1. Hauling 21 loads ashes from engine-room, Department of Justice, for month of Nov., 1888, at 40 cents 8.40

Wm. H. Wright:
10. Hauling books from Department of Justice to Interior Department; to post-office; to police court; to City Hall, and Capitol 2.00

Emanuel Pope:
26. Hauling load of books from Department of Justice to Mr. Earl's office, F street, N. W ..... .50

John Wells:
28. Hauling 27 loads ashes from engine-room, Department of Justice, for month of Dec., 1888, at 40 cents 10.80

1889. Samuel G. Eberly:
n. 8. 641 street-car tickets for use of Department of Justice at 3 9/10 cents 25.00

Washington and Georgetown Railway Company:
14. 240 street-car tickets for use of Department of Justice at 4 1/2 cents 10.00

Wm. H. Wright:
10. Hauling 1 load from Department of Justice to Capitol 1.00

John Wells:
b. 1. Hauling 27 loads ashes from engine-room, Department of Justice, for month of Jan., 1889, at 40 cents 10.80

Wm. H. Wright:
14. From State Department to Department of Justice, hauling books 1.00

Wm. H. Wright:
19. Hauling 1 load of books from Department of Justice to city post-office 1.25

John Wells:
ar. 1. Hauling 27 loads ashes from engine-room, Department of Justice, for month of February, 1889, at 40 cents 10.80

Washington and Georgetown Railway Company:
8. 600 street-car tickets for use of Department of Justice 25.00

Wm. H. Wright:
b. 28. Hauling books from Department of Justice to city post-office 1.00
ar. 2. Hauling books from Department of Justice to city post-office and Capitol 1.50
2.50

Charles A. Bruff:
9. Hauling flags to the Department from the navy-yard 2.50
Hauling flags from the Department to the navy-yard 2.50
5.00

Samuel G. Eberly:
26. 641 street-car tickets for use of Department of Justice, at 3 9/10 cents 25.00

89. John Wells:
30. Hauling 25 loads ashes from engine-room, Department of Justice, for month of March, 1889, at 40 cents $10.00

Wm. H. Wright:
29. Hauling books from Department of Justice to State Department ..... .50

John Wells:
y 2. Hauling 26 loads ashes from engine-room, Department of Justice, for April 1889, at 40 cents 10.40

Wm. H. Wright:
6. Hauling mail from Department of Justice to city post-office..... 1.00

Wm. H. Wright:
10. Hauling books from State Department to Department of Justice. .75

Wm. H. Wright:
16. Hauling books to Government Printing Office..... 1.00

Wm. H. Wright:
17. Hauling pamphlets from Department of Justice to post-office... 1.00

Samuel G. Eberly:
25. 641 street-car tickets for use of Department of Justice, at $3\frac{9}{10}$ cents 25.00

John Wells:
31. Hauling 22 loads ashes from engine-room, Department of Justice, for month May, 1889, at 40 cents 8.80

Wm. H. Wright:
June 6. Hauling one load of books from Department of Justice to post-office..... .75

Samuel G. Eberly:
14. 1,282 street-car tickets for use of Department of Justice, at $3\frac{9}{10}$ cents 50.00

Wm. H. Wright:
20. Hauling from Department of Justice to Government Printing Office, one load of books..... 1.00

John Wells:
29. Hauling 15 loads ashes from Department of Justice building during month of June 1889, at 40 cents..... 6.0

MISCELLANEOUS ITEMS.

1888. The Washington Post:
July 1. Subscription, one copy from July 1, 1888, to June 30, 1889..... 6

G. L. Sheriff:
6. 1 cord sawed pine wood .....

Evening Star Newspaper Company:
14. Advertising proposals for supplies, 12 lines, 10 times, 4 lines agate (1 square), at $3 per square.....

The Washington Post:
9. Advertising proposals for supplies, 3 squares, daily till July 9, 1888 .....

The Sunday Gazette:
Advertising proposals for supplies, 12-line space, 2 times, at 16⅔ cents per line each insertion.....

A. A. Chase & Bro.:
Aug. 4. Cleaning 893 yards Brussels carpet, at 1¾ cents..... $16.07
Cleaning 153 yards Turkish rugs, at 5 cents..... 7.65

Amelia Colbert:
July 31. Washing 25½ dozen towels for Department of Justice during July, 1888, at 20 cents.....

C. H. Burgess:
Aug. 7. 50 tons white ash furnace coal, at $5.05 .....

J. Edw. Chapman:

7.	20 cords hickory wood, sawed 3 pieces, at $6.49 per cord.	$129.80	
	Storing, at 50 cents	10.00	
	1 cord sawed and sifted pine wood	5.19	
	Storing	.50	
	1 cord 2-piece pine wood	4.22	
	Storing	.50	
			$150.21

Adams Express Company:
Transportation, as follows:

3.	1 box, Col. C. Clay, Cincinnati, Ohio	1.50	
	1 box, T. P. Devine, Springfield, Mass	1.75	
12.	1 box, Meriden, Conn., F. P. Dewees	1.40	
			4.65

G. L. Sheriff:

17.	1 cord pine wood (1 cut)	4.25

Great Falls Ice Company:

31.	5,600 pounds ice, at 35 cents	19.60

Chesapeake and Potomac Telephone Company:

	Exchange, rental for chief clerk's room from July 1 to July 31, 1888, at $80	6.67	
	Exchange, rental for Solicitor's office, Treasury Department, and Attorney-General's residence, from July 1 to July 31, 1888, at $60 each	10.00	
			16.67

Washington Gaslight Company:

	28,700 feet of gas consumed at No. 1507 Pennsylvania avenue N. W., Department of Justice, in the month of July, 1888, at $1.25 (net) per M feet	35.88

William Belt:

24.	Cutting and pulling up grass, and cleaning up generally, around the Department of Justice building and lot adjoining	3.00

H. W. Turpin:

	One barrel Withers' disinfectant solution	12.50

Wm. M. Cleland:

4.	Painting and kalsomining walls and ceiling and woodwork in chief-justice's room, in Court of Claims	175.00	
	7 lights of glass, at $1 per light	7.00	
			182.00

Cornelia Bond:

31.	Washing 33½ dozen towels for the Department of Justice, during month of August, 1888, at 12 cents	3.97

Chas. A. Bruff:

7.	Putting in 7 sash cords in windows, fourth floor	5.25	
12.	Putting in 5 sash cords in windows, second floor	3.75	
	Repairing door and lock, second floor	2.50	
	Repairing windows, third floor	4.25	
	Putting in 3 sash cords	2.25	
	Repairing door and putting on lock	2.50	
20.	Putting in 2 sash cords	1.50	
			22.00

Western Union Telegraph Company:

2.	Jenks to Caldwell, Louisville, 33	.33
	Jenks from Caldwell, Louisville, 20	.15
	Jenks from Dickens, Vicksburg, Miss., 43	.47
	Garland from Dickens, Vicksburg, Miss., 39	.43
	Garland from White, Tacoma, Wash., 72	1.80
3.	Jenks to White, Tacoma, Wash., 29	.73
	Jenks to Gove, Virginia, Nebr., 21	.53
	Jenks to Field, Portland, Oregon, 41	1.03
	Jenks from Field, Portland, Oregon, 35	.88
5.	Howard from Dewees, Pottsville, Pa., 31	.31
	Howard to Dewees, Pottsville, Pa., 28	.28
	Wilson to Dewees, Pottsville, Pa., 20	.20
	Wilson from Dewees, Pottsville, Pa., 23	.23
	Jenks to Carroll, Fort Smith, Ark., 47	.52

1888.				
		Western Union Telegraph Company—Continued:		
July	7.	Howard to Dewees, Pottsville, Pa., 20	$0.20	
		Howard to Thatcher, Boston, Mass., 18	.20	
	9.	Howard to Earle, Berkeley Springs, W. Va., 17	.20	
		Howard from Earle, Berkeley Springs, W. Va., 21	.21	
		Howard from Field, San Francisco, 47	1.18	
	10.	Howard to Meyers, Philadelphia, 30	.30	
		Jenks to Carroll, Fort Smith, Ark., 65	.72	
	14.	Jenks to Sandels, Fort Smith, Ark., 56	.62	
		Jenks to Marchant, Spokane Falls, Wash., 39	.98	
	12.	Garland from Risley, Los Angeles, 61	1.35	
	16.	Jenks to Rankin, San Antonio, 32	.51	
	18.	Jenks to Galvin, Boston, 41	.41	
	19.	Jenks to Parker, Fort Smith, Ark., 34	.37	
	23.	Cochran to Courtney, Hagerstown, 29	.29	
		Dewees to Howard, New York, 33	.33	
		Dewees from Howard, New York, 24	.24	
	24.	Dewees to Howard, New York, 25	.35	
		Wilson to Howard, New York, 80	.80	
		Jenks to attorney, Denver, Colo., 35	.63	
		Jenks to attorney, Oxford, Miss., 33	.36	
		Jenks to Warden, Laramie City, Wyo., 18	.36	
	26.	Jenks from Carr, Cheyenne, Wyo., 57	1.03	
		Jenks to Carr, Cheyenne, Wyo., 36	.65	
		Jenks to Thurman, Columbus, 23	.23	
		Perry to U. S. attorney, Charleston, S. C., 21	.21	
		Perry from U. S. attorney, Charleston, S. C., 34	.34	
	27.	Jenks to Liddell, Oxford, Miss., 42	.42	
	28.	Wilson to Howard, New York, 35	.35	
	30.	Jenks from Field, Carson, Nev., 72	1.80	
	31.	Howard to Sandels, Fort Smith, Ark., 28	.31	
	27.	Goode to Howard, New York., 65	.65	
				$94.49
		Western Union Telegraph Company:		
	16.	Reeve to Cary, Olean, N. Y., 24	.24	
	21.	Reeve to Bird, Portland, N. Y., 26	.26	
				.50
		R. O. Edmonston:		
Aug.	22.	1 dozen brooms	2.75	
		4 dozen mops	4.20	
		½ dozen mop handles, at $1	.50	
		200 pounds oleine soap, at 4 cents	8.00	
		108 pounds sand, at $5.90	6.37	
		6 dozen elder flower soap, at $1	6.00	
		6 dozen bouquet (Cashmere) soap, at $2.50	15.00	
		6 dozen honey soap, at $1	6.00	
		¼ dozen cedar pails, at $2.75	1.38	
		2 dozen feather dusters, 16 by 22 inches, at $13.50	27.00	
		1½ gross, 200 matches, at $1.60	2.40	
		¼ dozen chamois skins, at $3.60	1.80	
		2 pounds wax candles, at 15 cents	.30	
		100 pounds cotton waste, at $8\frac{9}{10}$	8.90	
				90.60
		Bradbury Steam Heating Company:		
Sept.	10.	Two ¾ by ¼ inch ells, 28 cents; one 1-inch ell, 12 cents; one 1-inch R. and L. coupling, 20 cents	.60	
		one 1-inch R. and L. nipples, 20 cents; one 1½ inch long screw, $1	1.20	
		4 feet of 1¼-inch pipe, 44 cents; one ¼-inch cross, 80 cents; three ¾-inch ells, 45 cents	1.69	
		Two 1-inch nippers, 40 cents; 2 ¾-inch reducing tees, 16 cents	.56	
		Two ¾-inch nippers, 12 cents; two ¼-inch nippers, 12 cents; two ¾-inch nipples, 20 cents	.44	
		Two ¼-inch bushings, 40 cents; one 1-inch bushing, 10 cents; one ¾-inch plug, 5 cents	.55	
		One ¾-inch reducing tee, 15 cents; 2 barrels mortar, $5.	5.15	
		4 days' time bricklayer, at $7	28.00	
		4 days' time bricklayer's laborer, at $3	12.00	
		4 days' time, 2 steam fitters, at $4 per day each	32.00	

888.	Bradbury Steam Heating Company—Continued:		
t. 10.	5 feet of 1 inch magnesia sectional pipe covering	$1.75	
	1 foot of 1 inch magnesia sectional valve covering	.25	
	1 foot of 1 inch magnesia sectional elbow covering	.25	
	Candles, 10 cents; 6 expansion plates for boiler, $4.50	4.60	
			$89.04
	L. R. Trembly:		
12.	Glass for picture of battle of Gettysburgh		3.00
	Smith & Wardwell:		
	4 baskets, at 99 cents		3.96
	James M. Hodges:		
7.	Decorating Court of Claims court-room	$75.00	
	Furnishing and lettering plate glass, Court of Claims	34.00	
	Varnishing floor	3.00	
	Whitening brick wall	4.00	
			116.00
	Chesapeake and Potomac Telephone Company:		
;. 13.	Exchange rental for chief clerk's room from August 1 to August 31, 1888, at $80	6.67	
	Exchange rental for Solicitor's office, Treasury Department, and Attorney-General's residence, from August 1 to August 31, 1888, at $60 each	10.00	
			16.67
	Bradbury Steam Heating Company:		
1.	One 2½-inch safety valve	16.75	
	Two 2½-inch long screws	5.40	
	Two 2½-inch nipples	1.20	
	10 hours man and helper	7.00	
	7 feet of 2½-inch covering	2.00	
			32.35
	Washington Gas Light Company:		
31.	23,600 feet of gas consumed at No. 1507 Pennsylvania avenue, northwest, Department of Justice, in the month of August, 1888, at $1.25 per M feet		29.50
	Great Falls Ice Company, 5,800 pounds ice, at 35 cents		20.30
	Wyckoff, Seamans & Benedict:		
r 5.	Repairs on typewriter No. 5872	$3.70	
t. 6.	Remodeling three No. 2 type-writers, at $28 type-writer—Nos. 5872, 4197, and 4475	84.00	
			87.70
	J. Hall Semmes:		
r 7.	1 dozen cakes Pears' soap	1.75	
	1 gross parlor matches	1.75	
. 4.	1 dozen mops	1.50	
	25 pounds soda	1.00	
;. 11.	2 boxes Babbitt's soap, at $4.25	8.50	
	2 dozen brooms, at $2.75	5.50	
	1 dozen sponges	9.00	
	1 dozen chamois skins, at 30 cents each	3.60	
	1 dozen paper buckets	2.75	
	2 dozen whisk brooms, at $1.50	3.00	
	½ dozen whisk brooms, at $2	1.00	
	1 dozen scrub brushes	1.25	
	3 dozen wax tapers, at 90 cents	2.70	
	½ dozen coal-hods, at $3	1.50	
	6 dozen Pears' soap, at $1.75	10.50	
	4 dozen rubber mats, at $10	40.00	
			95.30
	William Belt:		
20.	For cutting grass, first with scythe and afterwards with lawn-mower, on park adjoining Department of Justice building, and cleaning up brick walk through same		5.00
	Robert Leitch & Sons:		
3.	200 fire brick, at $8	16.00	
	50 arch brick, at $10	5.00	
	1 barrel fire-clay	4.50	
	Two ¾-inch Jenks valve, at $2.20	4.40	
	One ¼-inch steam-stop, $6.50; 1 barrel cement, $4	10.50	
	1 pound candlewick	.50	

Robert Leitch & Sons—Continued.

5.	One ½-inch pet-cock, 50 cents; one ½-inch plug, 10 cents..	$0.60	
	1 gauge-glass, 50 cents; one ½-inch long screw, 25 cents.	.75	
	Two ½-inch ells, 10 cents; 15 feet ½-inch pipe, 60 cents..	.70	
	30 feet ¾-inch pipe, $2.40; one 1 by ¾-inch ell, 10 cents..	2.50	
	One ½-inch check-valve	.75	
8.	One 1 inch Jenkins valve, $2.50; two ¾ inch nipples, 20 cents	2.70	
	One ½-inch nipple, 10 cents; one ¾-inch T, 10 cents	.20	
	One 1-inch long screw	.55	
	Three ¾-inch ells	.24	
			$49.50

James E. O'Shea:

24.	8 days' labor in cleaning and arranging the Department library, under the direction of the librarian, at $1.50 per day		12.00

J. Baumgarten & Son:

28.	1 pad for lever self-inker	.50	
	2 new pads for self-inkers	.75	
	1 bottle red ink	.75	
	1 bottle black ink	.50	
			2.50

John H. Bell:

27.	Whitewashing walls and ceilings in basement of Department of Justice building, as per agreement with the engineer, by order of chief clerk and superintendent of building		12.00

Washington Gas-Light Company:

29.	27,800 feet of gas consumed at No. 1507 Pennsylvania avenue N. W., Department of Justice, in the month of September, 1888, at $1.25 per M feet		34.75

Chesapeake and Potomac Telephone Company:

30.	Exchange rental for chief clerk's room from September 1 to September 30, 1888, at $80	6.67	
	Exchange rental for Solicitor's Office, Treasury Department, and Attorney-General's residence, from September 1 to September 30, 1888, at $60 each	10.00	
			16.67

Cornelia Bond:

29.	Washing 43½ dozen towels for Department of Justice during September, 1888, at 12 cents		5.22

Adams Express Company:

Transportation, as follows:

Aug. 8.	1 package, Boston Library, Department of Justice	.40	
16.	1 package, T. B. Hardin, Fort Dodge, Iowa	1.15	
			1.55

Western Union Telegraph Company:

1.	Wilson to Russell, Boston, 20	.20
	Cochran to Black, Halltown, W. Va., 23 (O. L. $1.50)	1.73
2.	Dewees to Hall, Baltimore, 19	.20
3.	Cochran to Courtney, Martinsburgh, 15	.20
	Jenks to Marshall, New Orleans, 22	.29
	Garland from Endicott, Green Brier White Sulphur Springs 28	.28
6.	Garland from Carey, San Francisco, 25	.63
	Jenks to Carey, San Francisco, 34	.85
	Jenks to Sandels, Fort Smith, Ark., 37	.41
8.	Howard to Hill, Boston, 33	.33
9.	Jenks to Keeper, Chesterfield, S. C,, 27 (O. L. 22)	.49
	Jenks to Warden, Columbus, 32	.32
	Jenks to Godwin, Grand Rapids, 37	.37
	Jenks to Atkins, Port Townsend, Wash., 32 (O. L. 74)	1.54
	Jenks to Hobson, Denver, 36	.65
	Jenks to Sandels, Fort Smith, Ark., 34	.37
	Garland from Maratta, Deadwood, Dak., 31	.53
10.	Garland from Purcell, Deadwood, Dak., 41	.70
	Jenks from Clemmer, Columbus, 72	.72
	Jenks to De Wolfe, Butte, Mont., 22	.51
	Jenks to Godwin, Marquette, Mich., 37	.37

888.		Western Union Telegraph Company—Continued.		
r.	11.	Jenks to Walter, Jacksonville, 31	$0.31	
	13.	Jenks to Nicholson, Detroit, 30	.30	
	14.	Jenks to Corn, Cheyenne, Wyo., 22	.40	
	15.	Jenks to Purcell, Deadwood, Dak., 18	.34	
		Howard from Taylor, Winnipeg, Manitoba, 66 (O. L. $1.01)	1.80	
	16.	Jenks to Marshall, Salt Lake City, Utah, 23	.55	
	17.	Garland from Carey, San Francisco, 40	1.00	
	21.	Garland from Marratta, Deadwood, Dak., 51	.87	
		Jenks from Henderson, Chesterfield, S. C., 31 (O. L. 25)	.56	
		Jenks to Keeper, Chesterfield, S. C., 43 (O. L. 38)	.81	
		Howard to Jones, Jacksonville, 26	.26	
		Howard from Jones, Jacksonville, 34	.34	
		Howard to Wilson, Portland, Me., 28	.28	
		Jenks to Boyle, Uniontown, Pa., 24	.24	
	22.	Jenks to Atkins, Port Townsend, Wash., 20 (O. L. 56)	1.06	
		Howard to Ingalls, Wicasset, Me., 21	.21	
		Garland from Call, Jacksonville, 13	.20	
	23.	Garland from White, Seattle, Wash., 18	.50	
		Garland to White, Seattle, Wash., 34	.85	
		Jenks to Porter, Santa Rosa, Cal., 40	1.00	
	24.	Howard from Wilson, Portland, Me., 25	.25	
	25.	Howard to Wilson, Portland, Me., 20	.20	
		Russell from Wilson, Portland, Me., 21	.21	
		Jenks to West, Salt Lake, Utah, 26	.62	
		Jenks to West, Salt Lake, Utah, 22	.53	
	27.	Jenks to Peters, Salt Lake, Utah, 78	1.87	
		Jenks from Peters, Salt Lake, Utah, 46	1.10	
		Howard from Wilson, Salem, Mass., 32	.32	
		Jenks to Hanley, Hailey, Idaho, 78	1.95	
	28.	Jenks to Carey, San Francisco, 27	.68	
		Jenks to Pearre, Waco, Tex., 28	.45	
		Howard to Jones, Jacksonville, 27	.27	
		Howard from Jones, Jacksonville, 27	.27	
	29.	Garland from Lockwood, Buffalo, 34	.34	
		Boteler from Youmans, Greenville, S. C., 22	.22	
		Boteler to Youmans, Columbia, S. C., 26	.26	
		Hughes to Harrity, Philadelphia, 25	.25	
		Jenks to Hanley, Hailey, Idaho, 25	.63	
		Jenks to Thurman, Columbus, 37	.37	
	30.	Jenks to Lockwood, Buffalo, 28	.28	
		Clay to Detre, Philadelphia, 26	.26	
		Boteler to Youmans, Columbia, 20	.20	
		Garland from Call, Jacksonville, 33	.33	
	31.	Howard from Knight, St. Louis, 20	.15	
		Jenks from Hawley, Boisé City, Idaho, 30	.75	
		Jenks from Hobson, Denver, 19	.36	
		Jenks from Hobson, Denver, 21	.38	
	27.	Howard to Smith, Holly Springs, Miss., 18	.22	
				$37.29
		Western Union Telegraph Company:		
	8.	Reese from Carey, Olean, N. Y., 36	.36	
	21.	Reese to Call, Jacksonville, 36	.36	
	22.	Reese from Call, Jacksonville, 42	.42	
				1.14
		Chas. A. Bruff:		
ɔt.	11.	Furnishing and putting in 21 sash-cords	10.50	
		Repairing windows and shortening 16 cords	3.50	
		Repairing windows and putting in 36 feet of beed	1.00	
		Repairing windows and putting in two pulleys	3.00	
		Repairing back gate, etc	4.00	
		Repairing front door and 1 pair bronze hinges, 5½ by 5½	8.50	
				30.50
		J. Edward Chapman:		
	3.	2 cords pine wood, sawed 2 pieces, at $4.22	8.44	
		Storing, at 50 cents per cord	1.00	
	11.	1 cord sawed and split kindling wood	5.19	
		Storing	.50	
				15.13

1888.				
		Adams Express Company:		
Sept.	7.	1 box, New York, C. Clay	$1.40	
	15.	1 box, New York, library, Department of Justice	.35	
				$1.75
		C. H. Burgess:		
Oct.	15.	30 tons furnace coal, at $5.05		151.50
		Thos. J. Steele:		
	22.	Taking up all the brick along the walk across the reservation between 15½ street to Department of Justice building, relaying same in new bed of sand and making gutter of brick on north side of walk, etc., as per verbal contract with chief clerk and superintendent of building		35.00
		Wyckoff, Seamans & Benedict:		
Sept.	4.	One paper shelf, for type-writer, order No. 399	$0.75	
Oct.	1.	Repairs on type-writer, No. 3417, order No. 403	28.00	
				28.75
		United States Express Company:		
July	16.	1 package from Waco, Tex. (signed J. J. Haney)	.25	
	19.	1 package from Annapolis, Md. (signed Sheibley)	.25	
				.50
		United States Express Company:		
Aug.	15.	1 package from St. Paul, Minn. (signed Sheibley)		1.20
		Western Union Telegraph Company:		
Sept.	1.	Howard to Knapp, St. Louis, Mo., 24	$0.26	
		Howard from Wilson, Boston, 23	.23	
	3.	Jenks to Logan, New Orleans, 32	.42	
	5.	Garland from Sawyer, San Francisco, 41	1.03	
	6.	Jenks to Carroll, Fort Smith, 28	.31	
		Jenks to Jones, Wichita, Kans., 32	.43	
		Jenks to Atkins, Port Townsend, 36 (O. L. 89)	1.79	
	7.	Garland from Smith, Albuquerque, 74	1.55	
	8.	Fairchild to assistant treasurer, St. Louis, 69	.76	
		Jenks to Peters, Salt Lake, 28	.67	
		Jenks to Hobson, Denver, 31	.56	
	10.	Jenks from Hobson, Denver, 25	.45	
	11.	Jenks from Peters, Salt Lake, Utah, 27	.65	
		Jenks from Peters, Salt Lake, Utah, 24	.58	
		Jenks from Jones, Charlotte, N. C., 31	.31	
		Jenks from Monday, Buffalo, 32	.32	
	12.	Jenks from Reagan, Galveston, Tex., 51	.82	
	14.	Maury from marshal, Greensboro, N. C., 31	.31	
		Maury from Jones, Charlotte, N. C., 22	.22	
		Boteler from superintendent, Menard, Ill., 24	.24	
		Boteler from Mitchell, Chester Prison, Ill., 25	.25	
	15.	Maury to Carroll, Fort Smith, Ark., 35	.39	
		Maury to Carey, San Francisco, 35	.88	
	18.	Cochran to Myers, Philadelphia, 23	.23	
		Jenks to Bunn, Buffalo, 26	.26	
		Jenks to Jordan, Lynchburgh, 17	.20	
		Jenks to Black, Detroit, 20	.20	
		Jenks from Black, Detroit, 32	.32	
		Jenks from Gurley, New Orleans, 37	.48	
		Jenks to Parlange, New Orleans, 24	.31	
	19.	Jenks to Parlange, New Orleans, 38	.49	
		Jenks from Gurley, New Orleans, 87	1.13	
		Jenks from Gurley, New Orleans, 114	1.48	
		Jenks to Pearre, Waco, Texas, 28	.45	
		Wilson to Hayden, Fairmount, W. Va., 20	.20	
		Boteler to Settle, Greensborough, N. C., 26	.26	
	20.	Jenks to Smith, Albuquerque, N. Mex., 16	.42	
	22.	Garland from McComb, Jefferson, Tex., 36	.61	
	24.	Jenks to McComb, Jefferson, Tex., 30	.48	
		Jenks to Bunn, Cooperstown, N. Y., 34	.34	
		Jenks to Hawley, Hailey, Idaho, 24	.60	
	25.	Jenks to Settle, Greensboro, N. C., 22	.22	
		Garland from Gross, Louisville, Ky., 23	.23	
	26.	Jenks from Peters, Salt Lake, Utah, 59	.64	
		Jenks to Peters, Salt Lake, Utah, 34	.82	

	Western Union Telegraph Company—Continued.		
26.	Jenks to Kleberg, Cuero, Tex., 30	$0.82	
27.	Jenks from Kleberg, Cuero, Tex., 21	.34	
28.	Jenks from Desmond, Dubuque, Iowa, 31	.37	
	Jenks to Desmond, Dubuque, Iowa, 31	.37	
	Jenks to Rankin, San Antonio, 38	.61	
29.	Jenks to Thurman, Columbus, 41	.41	
			$26.38
	Western Union Telegraph Company:		
3.	Reese to McComb, Galveston, Tex., 27	.43	
18.	Solicitor from Rouse, Tucson, Ariz., 30	.75	
			1.18
	Julius H. Albers:		
30.	Repairing strike clock in disbursing officer's room	1.50	
	Repairing striking clock in library	1.50	
	Repairing, furnishing new center wheel, and cleaning French clock in Attorney-General's ante-room	5.50	
	Repairing eight-day wall clock on top floor	1.25	
	Repairing and cleaning of fine French clock in the Assistant Attorney-General's room	4.50	
	Main-spring for same clock	2.00	
			16.25
	Cornelia Bond:		
31.	Washing 46½ dozen towels for Department of Justice during month of October, 1888, at 12 cents		5.57
	Lansburgh & Bro.:		
28.	6 dozen towels, at $3	18.00	
	2 dozen towels, at $3.95	7.90	
	104 yards crash, at 12½ cents	13.00	
		38.90	
	Less 5 per cent	1.95	
			36.95
	Washington Gas Light Company:		
31.	3,900 feet of gas consumed at No. 1507 Pennsylvania avenue, N. W., Department of Justice, in the month of October, 1888, at $1.25 net per M cubic feet		38.63
	Chesapeake and Potomac Telephone Company:		
	Exchange rental for chief clerk's room from Oct. 1 to Oct. 31, 1888, at $80	6.67	
	Exchange rental for Solicitor's Office, Treasury Department, and Attorney-General's residence, from Oct. 1 to Oct. 31, 1888, at $60 each	10.00	
			16.67
	Adams Express Company:		
16.	1 package, Des Moines, F. Strong	.80	
	1 package, T. B. Hardin, Des Moines, Iowa	1.10	
25.	1 box, Boston, Department of Justice	2.00	
			3.90
	Charles A. Bruff:		
10.	Making and putting up 7 cases of book-shelves and furnishing lumber	175.00	
	Furnishing Georgia pine, steeping and repairing back stairs	8.00	
			183.00
	W. D. Wyvill:		
2.	Putting in (lining) 2 fire-places with soap-stone, at $3.50	7.00	
	Repairing 2 pairs brass andirons	4.00	
	1 zinc board	1.75	
	Putting up stove	1.00	
22.	2 grate baskets, at $12	24.00	
			37.75
	Western Union Telegraph Company:		
1.	Jenks to Sawyer, San Francisco, $2.75	6.88	
	Jenks to Carey, San Francisco, 21	.53	
	Jenks from Carey, San Francisco, 41	1.03	
	Jenks from Smith, Bozeman, Mont., 96	2.19	
2.	Jenks from Carey, San Francisco, 29	.73	
	Jenks to Carey, San Francisco, 18	.50	
	Jenks to Smith, Santa Fé, 27	.57	

1888.				
		Western Union Telegraph Company—Continued.		
Oct.	2.	Jenks to Bunn, Santa Fé, 41	$0.86	
		Jenks to Hobson, Denver, Colo., 27	.49	
		Jenks to Sanford, Salt Lake City, Utah, 25	.60	
	3.	Jenks to Peters, Salt Lake City, Utah, 24	.58	
		Jenks from Peters, Salt Lake City, Utah, 27	.65	
		Jenks from Heiskell, Brooklyn, 18	.20	
		Jenks from Hobson, Dunn, Colo., 34	.61	
		Jenks to Hobson, Dunn, Colo., 29	.52	
		Jenks to Denis, Los Angeles, 31	.78	
		Garland to Knapp, St. Louis, 25	.28	
	4.	Boteler to Dyer, Salt Lake City, Utah, 33	.79	
		Solicitor from Hobson, Denver, 21	.56	
	5.	Garland to Perry, Topeka, Kans., 29	.38	
	6.	Garland to Hanley, Blackfoot, Idaho, 22	.55	
		Maury to Barker, New York, 40	.40	
		Garland from Barker, Keene, N. H., 36	.36	
	8.	Garland from Hobson, Salt Lake City, 48	1.15	
		Garland to House, Little Rock, 22	.24	
		Branagan to Van Rosen, Dallas, Oregon, 41 (O. L., 41)	1.44	
	10.	Garland to West, Milwaukee, 19	.20	
		Garland from West, Milwaukee, 40	.40	
	13.	Garland to Peters, Salt Lake, 25	.60	
		Garland to Pritchett, Omaha, 24	.31	
		Garland from Gross, Louisville, 27	.27	
		Howard from Dewees, Pottsville, 21	.21	
	15.	Garland from Peters, Salt Lake City, 56	.71	
		Garland from Allen, Woodstock, Va., 47	.47	
		Garland to Allen, Woodstock, Va., 32	.32	
	16.	Howard to Cochran, Philadelphia, 25	.25	
	17.	Howard from Dewees, Pottsville, Pa., 28	.28	
	18.	Garland from Risley, Los Angeles, Cal., 24	.60	
		Garland from Bud, Monticello, Fla., 24	.24	
		Garland to Bud, Monticello, Fla., 14	.20	
	19.	Garland to Call, Jacksonville, Fla., 25	.25	
		Garland to Dick, Statesville, 36	.36	
	22.	Garland to Walker, New York, 30	.30	
	23.	Garland to Marsh, Chicago, 11	.20	
	24.	Garland to Rouse, Prescott, Ariz., 52 (O. L., 52)	1.82	
	25.	Garland to Parker, Fort Smith, Ark., 22	.24	
	26.	Clay to Howe, Cincinnati, 44	.44	
		Wilson to Parkhurst, Bangor, Me., 24	.24	
	29.	Wilson to King, Baltimore, 20	.20	
		Howard to Russell, Gloucester, Mass., 20	.20	
		Garland to Call, Jacksonville, 23	.23	
		Garland to Smith, Dillon, Mont., 51	1.17	
		Garland to Peters, Salt Lake City, Utah, 28	.67	
		Garland from Peters, Salt Lake City, Utah, 38	.43	
	30.	Garland to Carroll, Fort Smith, Ark., 18	.22	
		Garland to Logan, New Orleans, 20	.26	
	31.	Howard from Goode, Hartford, Conn., 36	.36	
	17.	Garland to Call, Monticello, 23	.23	
				$36.75
		Western Union Telegraph Company:		
	10.	Reeve to Burnet, Cincinnati, 26	.26	
		Reeve to Hayes, Baltimore, 26	.26	
		Reeve to Bashaw, St. Louis, 26	.29	
		Reeve to McCorry, Jackson, Tenn., 26	.26	
	20.	Cary to Pearre, Graham, Tex., 57 (O. L., 57)	1.48	
				2.55
		Wyckoff, Seamans & Benedict:		
Nov.	2.	1 dozen bottles oil, order No. 427		2.40
		The Sunday Herald:		
July	1.	Proposals for supplies, 2⅛ squares, 2 times		3.79
		The Washington Critic Company:		
June	26.	Advertising proposals for ice, fuel, etc, 17 lines, 10 times, at $1 per day		10.20
		Royce & Mareau:		
Sept.	13.	Connecting electric bell wires in Attorney-General's room		1.00

Great Falls Ice Company:
30. 5,500 pounds ice, at 41 cents $2

Great Falls Ice Company:
31. 5,800 pounds ice, at 41 cents 2

Bureau of Engraving and Printing:
21. Engraving 2 plates and printing 200 commissions for United States judges, attorneys, and marshals 28

Chas. A. Bruff:
28. Repairing front door and lock $1.25
Furnishing and putting on Yale night-latch 3.00

Albert Scott:
Laying 503½ yards of carpet, at 3 cents 1

W. W. Tupper & Co.:
23. 7 pieces No. 1 set grate bars 3

Great Falls Ice Company:
30. 5,500 pounds ice, at 41 cents 2

Cornelia Bond:
Washing 52⅛ dozen towels for Department of Justice during month of November, 1888, at 12 cents $6.34
Hemming and stitching 161 crash towels, at 3 cents 4.83

C. H. Burgess:
50 tons white ash furnace coal, at $5.05 25

William Belt:
4. 21 loads of manure, placed on reservation adjoining Department of Justice building, at $1.25 per load 2

H. Semken:
15. Cleaning and repairing clock .....

Washington Gas Light Company:
30. 37,900 feet of gas consumed at No. 1507 Pennsylvania avenue Northwest, Department of Justice, in the month of November, 1888, at $1.25 per M feet 4

Adams Express Company:
Transportation as follows:
10. 1 package, T. B. Hardin, Council Bluffs, Iowa $1.15
22. 1 package, D. A. Fisher, Kansas City, Mo ..... .70
23. 2 boxes, St. Louis, Mo., Department of Justice 5.60

W. B. Moses & Son:
15. Laying 250 yards old carpet and rugs, at 5 cents 1

Kane & Roach:
20. 1½ days, plumber and helper, cleaning gas pipe, at $6 .. 9.00
15. ½ day, plumber and helper, making lead joint, at $6 .... 1.50

Charles A. Bruff:
5. Putting in 2 iron plates under door bolts ..... .75
Making and glazing 3 storm windows 33.50
Altering and putting up shelving 7.50

J. Edward Chapman:
7. 1 cord pine kindling 5.19
1 cord pine wood (sawed in 2 pieces) 4.22
Storing above, at 50 cents per cord 1.00

George W. Knox:
18. Freight paid Baltimore and Potomac Railroad on 1 case books ..

H. W. Turpin:
20. Withers' disinfectant solution, 1 barrel 1

J. H. Albers:
26. Repairing one 8-day clock in room 7, third floor .....

C. H. Burgess:
28. 50 tons furnace coal, at $5.05 2

1888,		Cornelia Bond:		
Dec.	31.	Washing 47 dozen towels in the month of December, 1888, at 12 cents		$5.64
1889.		J. Bumgarten & Son:		
Jan.	4.	2 self-inking seal presses and dies for Solicitor of Treasury		2.50
1888.		James M. Hodges:		
Nov.	28.	Glazing 1 light, 16 by 20	$0.60	
		Glazing 2 lights, 20 by 50	6.00	
		Staining and varnishing floors and borders, 7 rooms	20.00	
				26.60
		Washington Gas-Light Company:		
Dec.	31.	50,400 feet of gas consumed at No. 1507 Pennsylvania avenue N. W., Department of Justice, in the month of December, 1888, at $1 per M cubic feet		63.00
		Chesapeake and Potomac Telephone Company:		
Nov.	30.	Exchange rental for chief clerk's room, from Nov. 1 to Nov. 30, 1888, at $80	$6.67	
		Exchange rental for solicitor's office, Treasury Department, and attorney-general's residence, from Nov. 1 to Nov. 30, 1888, at $60 each per annum	10.00	
				16.67
		Chesapeake and Potomac Telephone Company:		
Dec.	31.	Exchange rental for chief clerk's room from Dec. 1 to Dec. 31, 1888, at $80	6.67	
		Exchange rental for Solicitor's Office, Treasury Department, and Attorney-General's residence, from Dec. 1 to Dec. 31, 1888, at $60 each	10.00	
				16.67
		Great Falls Ice Company:		
		5,700 pounds ice, at 41 cents		23.37
		Western Union Telegraph Company:		
Nov.	1.	Garland to Bunn, Albany, N. Y., 54	.54	
		Howard to Goode, Hartford, Conn., 23	.23	
		Garland to Smith, Santa Fé, 25	.53	
		Garland to Ross, Santa Fé, 65	1.37	
		Garland from Peters, Salt Lake City, 21		
		Garland from Pearre, Waco, Tex., 69	1.10	
		Garland from Pearre, Waco, Tex., 57	.91	
		Garland from Risley, Los Angeles, 24	.60	
	2.	Garland to Risley, Los Angeles, 51	1.28	
		Garland to Rankin, San Antonio, 79	1.26	
		Howard to Lewis, Philadelphia, 40	.40	
		Garland from Peters, Salt Lake City, 34	.82	
	3.	Garland to Stahlnecker, Yonkers, N. Y., 29	.29	
	5.	Garland to Bunn, Cooperstown, N. Y., 88	.88	
		Garland to Spencer, Huron Dak., 11	.34	
	6.	Garland to Pearre, Waco, Tex., 40	.64	
		Garland to Marchant, Osage Agency, Kans., 58 (O. L. 83)	1.58	
	8.	Garland to Zulick, Prescott, Ariz., 31 (O. L. 76)	1.54	
	9.	Garland to Call, Jacksonville, 31	.31	
		Garland to Bowden, Norfolk, 32	.32	
	10.	Garland to Bunn, Cooperstown, 48	.48	
		Garland to Godwin, Grand Rapids, 32	.32	
	12.	Garland to Reeves, Santa Fé, 15	.42	
	13.	Garland to Cabell, Dallas, Tex., 32	.51	
		Garland to Hobson, Denver, Colo., 38	.68	
		Garland from Hobson, Denver, Colo., 43	.38	
	14.	Garland from Peters, Salt Lake, 35	.40	
	15.	Garland to Strong, Los Angeles, 20	.50	
		Garland to Perry, Topeka, Kans., 25	.33	
		Garland from Perry, Topeka, Kans., 145	1.89	
		Garland from Foster, Topeka, Kans., 19	.26	
		Garland to Foster, Topeka, Kans., 27	.35	
	16.	Garland to Rouse, Prescott, Ariz., 39 (O. L. 39)	1.37	
	17.	Garland to Rouse, Prescott, Ariz., 49 (O. L. 49)	1.72	
		Boteler to McMichen, Wichita, 19	.26	
		Garland to Richardson, Whiteville, N. C., 27	.27	
		Garland to Strong, Salt Lake, Utah, 30	.72	

	Western Union Telegraph Company—Continued.		
17.	Garland to Jones, Topeka, Kans., 28	$0.36	
	Garland from Jones, Topeka, Kans., 35	.46	
	Garland from Jordan, Dublin, Va., 29	.29	
19.	Garland to Marchant, Yankton, 25	.43	
	Garland to Perry, Topeka, Kans., 29	.38	
	Garland to Foster, Topeka, Kans., 20	.26	
	Garland from Foster, Topeka, Kans., 48	.62	
	Garland from Foster, Topeka, Kans., 19	.26	
	Garland from Strong, Salt Lake, 41	.98	
	Garland to Peters, Salt Lake, 21	.50	
	Boteler to Caine, Salt Lake, 17	.48	
20.	Garland to Jones, Topeka, Kans., 27	.35	
21.	Garland to Wiggs, Seattle, Wash., 36	.90	
	Garland to Goodwin, Grand Rapids, 40	.40	
	Garland to Hardin, Des Moines, 22	.26	
	Garland to McDonald, Indianapolis, 27	.27	
	Garland to Hobson, Denver, 33	.59	
	Garland to Carroll, Fort Smith, 15	.22	
	Garland from Dinkins, Jackson, Miss., 29	.32	
22.	Clay to Robinson, Bennington, Vt., 22	.22	
	Clay to Jordan, New Berne, Va., 17 (O. L. 15)	.35	
	Clay to Stafford, Brooklyn, 22	.22	
	Clay to Richardson, Whiteville, N. C., 20	.20	
	Clay to Yancey, Memphis, Tenn., 20	.20	
	Clay to Dyer, Salt Lake, 22	.53	
23.	Clay from Jordan, Danville, 19	.20	
	Jenks to Storrow, New York, 21	.21	
24.	Garland to Lockwood, Buffalo, 38	.38	
	Garland to Munday, Seattle, Wash., 28	.70	
26.	Garland to Duryee, Newark, 27	.27	
	Garland to Bennett, Cincinnati, 24	.24	
	Branagan to Fisher, Kansas City, 25	.28	
28.	Garland to Hobson, Salt Lake City, 71	1.70	
	Garland from Hobson, Salt Lake City, 47	1.13	
	Garland from McArthur, Portland, Oregon, 74	1.85	
30.	Garland to Oates, San Francisco, 24	.60	
	Garland to Black, Detroit, 31	.31	
	May to Dodge, New York, 36	.36	
	May to Dodge, New York, 27	.27	
	May to Dodge, New York, 29	.29	
	May to Walker, New York, 26	.26	
	May to Walker, New York, 45	.45	
28.	Garland to Black, Detroit, 26	.26	
9.	Wilson to Russell, Baltimore, 23	.23	
			$46.34
	Western Union Telegraph Company:		
14.	Solicitor from Rouse, Tucson, Ariz, 34	.85	
15.	Cary from Rouse, Prescott, Ariz., 29 (O. L. 29)	1.02	
19.	Cary from Baxter, St. Paul, 25	.30	
20.	Cary to Baxter, St. Paul, 29	.35	
30.	Cary to Ward, Morrillton, Ark., 30	.33	
			2.85
	E. F. Brooks:		
10.	1 drop-light with 12 feet tubing	11.50	
	1 independent connection	.75	
			12.25
	James B. Lambie:		
3.	2 gallons turpentine, at 65 cents	1.30	
	10 pounds red lead, at 15 cents	1.50	
	12½ pounds white lead, at 13 cents	1.63	
	½ dozen hand-hole gaskets	2.00	
	1 manhole gasket	3.50	
	10 pounds packing, at 50 cents	5.00	
	3 paint brushes, assorted	1.88	
	2 steel coal-shovels, at $1.50	3.00	
	1 brass oil-tray and oilers	7.50	
	One 8-foot ladder	3.50	
	1 lock	.65	
	14 two-4-inch flat brushes, at 90 cents	1.80	

1888.		James B. Lambie—Continued:		
Sept.	28.	1 gallon oil	$0.85	
		1 piece ¼-inch steel, 18 inches long	.45	
		1½ pounds sheet gum, at 85 cents	1.28	
		4 bolts	1.05	
		1 lock	.50	
Oct.	10.	½ dozen brushes	2.75	
Nov.	20.	2 papers tacks, at 12 cents	.24	
		2 tack hammers, at 25 cents	.50	
Dec.	4.	2 files, at 85 cents, $1.70; (24) 1 lock, at $1.50	3.20	
	24.	10 pounds plumbago packing, at 65 cents	6.50	
				$50.
		George W. Knox:		
Oct.	27.	Freight paid Baltimore and Potomac Railroad Company on 1 case books		63.
		Kane & Roache:		
Dec.	14.	Grinding basin	$0.50	
		1 basin clamps	.15	
		Repairing cock	.50	
		½ day plumber and helper, repairing basin on fourth floor, at $6	3.00	
	22.	One ¼-inch slip thimble	.25	
		1 pound solder	.25	
		1 day plumber and helper, repairing and cleaning basin waste-pipe	6.00	
1889.				
Jan.	4.	½ day plumber and helper, repairing urinal	3.00	
				13.
1888.		Willett & Ruoff:		
Nov.	28.	Storage on robe	10.00	
		Repairing robe and destroying moth	9.00	
				19.
		Adams Express Company:		
		Transportation as follows:		
Dec.	6.	1 package, Montgomery, Ala., Frank Strong	.75	
		1 box, F. Branagan, New York	.50	
	10.	1 box, Wheeling, Department of Justice	1.00	
		1 package, Boston, Department of Justice	.70	
	12.	1 package, New York, F. Branagan	.25	
	15.	1 box, Boston, Department of Justice	1.25	
	17.	1 package, Boston, Department of Justice	.50	
				4
		Wm. L. Ford:		
	19.	1 Welsbach gas burner, complete (put on)		2
		Western Union Telegraph Company:		
	1.	Wilson to Pomeroy, New York, 39	.39	
		Wilson to Myers, Philadelphia, 59	.59	
		Garland to Oates, San Francisco, 25	.63	
		Garland from Jones, Shreveport, La., 60	.78	
	4.	Garland to Galvin, Boston, 35	.35	
		Garland to Howry, Oxford, 17	.22	
		Clay to Witcher, Cincinnati, 26	.26	
		Howard to Richmond, Vicksburg, 19	.22	
		Howard from Richmond, Vicksburg, 22	.24	
	5.	Garland from Gross, Covington, Ky., 30	.30	
		Garland to Dyer, Salt Lake, Utah, 17	.48	
	6.	Garland to Carey, San Francisco, 21	.53	
		Howard to Zalenski, New York, 33	.33	
		Howard to Zalenski, New York 34	.34	
	7.	Garland to Hanley, Hailey, Idaho, 30	.75	
	8.	Garland from Hanley, Boisé City, 20	.50	
	11.	Garland to Sellers, Indianapolis, 44	.44	
		Garland to Rouse, Prescott, Ariz., 28 (O. L., 28)	.98	
		Garland to Ayer, Chicago, Ill., 43	.43	
	12.	Howard to Endicott, Savannah, 16	.20	
		Garland to Hobson, Denver, 28	.50	
		Garland from Hobson, Denver, 66	1.19	
		Garland from Bailey, Indianapolis, 23	.23	
	13.	Garland from Wiggs, Portland, Oregon, 26	.65	

	Western Union Telegraph Company—Continued:		
13.	Garland from Marsh, Chicago, 35	$0.35	
	Garland from Lockwood, Buffalo, 24	.24	
	Garland to Lockwood, Buffalo, 34	.34	
	Garland to Sill, Hartford, 19	.20	
	Garland to Honey, Jackson, 33	.36	
	Garland to Hobson, Denver, 25	.45	
14.	Jenks to Hobson, Denver, 21	.38	
	Jenks to Peters, Salt Lake, 21	.50	
	Garland to Carey, San Francisco, 30	.75	
	Garland to Howry, Oxford, Miss., 33	.36	
	Garland to Allen, Woodstock, Va., 20	.20	
	Garland from Allen, Woodstock, Va., 64	.64	
	Garland from Pearre, Waco, Tex., 140	2.34	
	Garland to Pearre, Waco, Tex., 18	.32	
15.	Howard to Endicott, Charleston, 22	.22	
5.	Boteler to Canton, New York, 21	.21	
17.	Howard to Richmond, Greenville, Miss., 29	.32	
	Garland to Howry, Oxford, Miss., 22	.24	
	Garland to Lockwood, Buffalo, 23	.23	
	Garland from Lockwood, Buffalo, 30	.30	
18.	Garland from Carey, San Francisco, 23	.28	
19.	Garland to Youmans, Columbia, 18	.20	
	Garland to Hughes, Spencer, Iowa, 23	.28	
	May to Howard, New York, 23	.23	
20.	Howard from Richmond, Greenville, 19	.22	
21.	Garland from White, Seattle, Wash., 44	1.10	
22.	Garland to White, Seattle, Wash., 17	.50	
	Garland to postmaster, Ironton, Ohio, 35	.35	
	Garland to Henderson, Salisbury, N. C., 50	.50	
	Howard from Richmond, Vicksburg, Miss., 32	.35	
24.	Howard from Richmond, Vicksburg, Miss., 16	.22	
	Howard to Richmond, Vicksburg, Miss., 22	.24	
	Howard from Richmond, Vicksburg, Miss., 28	.31	
	Garland from Peters, Salt Lake, Utah, 19	.48	
26.	Garland from Carey, San Francisco, 59	1.48	
	Garland to Kleberg, Cuero, Tex., 39	.62	
	Boteler to William, Beaufort, S. C., 22	.22	
	Boteler to Deyer, Salt Lake, 24	.58	
27.	Garland to Rouse, Prescott, Ariz., 50 (O. L., 50.)	1.75	
	Garland to Carey, San Francisco, 24	.60	
28.	Garland to Carey, San Francisco, 34	.85	
	Boteler to superintendent, Laramie City, Wyo., 33	.59	
29.	Garland to Carey, San Francisco, 25	.63	
31.	Perry to Nicholson, Detroit, 35	.35	
			$33.71
	Western Union Telegraph Company:		
4.	Cary to Purcell, Wahpeton, Dak., 25	.43	
7.	Cary to Bashaw, St. Louis, 35	.39	
17.	Cary to Rouse, Tucson, Ariz., 44	1.10	
18.	Cary from Rouse, Tucson, Ariz., 21	.53	
19.	Cary from Pearre, Waco, Tex., 99	1.58	
	Reese to Pearre, Waco, Tex., 53	.85	
28.	Reese to Black, Detroit, 38	.38	
	Reese from Black, Detroit, 31	.31	
			5.57
).	Chas. A. Bruff:		
3.	Moving and putting up shelving, etc	12.75	
7.	Repairing elevator entrance door, and furnishing and putting on 2 pairs of bronze hinges	4.00	
	Repairing floor and wash-board around register	2.50	
	Repairing window	1.00	
10.	3 men's labor, 15 hours each, at 50 cents per hour	22.50	
	1 helper's labor, 15 hours, at 25 cents per hour	3.75	
	Moving and putting up shelving, nails, screws, and holdfast	.55	
	Furnishing and putting up 765 feet of white pine shelving	65.00	
			112.05

1889.		J. Baumgarten & Son:		
Jan.	18.	1 Atlas band dating stamp		$4.00
		S. J. Haislett:		
	22.	1 12-foot storm flag		15.00
		L. R. Trembly:		
	23.	2 frames for photographs and glass		5.00
1888.				
Oct.	10.	2 floats and frames		16.50
		W. H. Hoeke:		
Sept.	29.	Cleaning 7 pair Madras curtains	8.75	
		Storage on same	10.00	
				18.75
		Kane & Roache:		
Jan.	7.	1 basin-cock coupling	.25	
		2 feet ½-inch lead pipe, at 25 cents	.50	
		1 ½-inch strap lead	1.25	
		1½ feet 1½-inch lead pipe, at 40 cents	.60	
		1 2-inch coupling thimble	.60	
		1 2-inch tend, C. I	.50	
		1 basin clamp	.10	
		1 grinding basin (by hand)	.75	
		1 strip 4 feet 43 inches wide	.25	
		3 pounds putty, at 5 cents	.15	
		1 ½-inch stop-cock	1.25	
		1 ½-inch nipple	.15	
		1 ½-inch fitting	.10	
		1 ½-inch thimble	.15	
		6 pounds solder, at 25 cents	1.50	
		1½ days plumber and helper, at $6	10.50	
	10.	1½ lead trap	1.25	
		4 feet 1½-inch lead pipe, at 40 cents	1.60	
		5 pounds solder, at 25 cents	1.25	
		5 pounds sheet lead, at 10 cents	.50	
		½ pound fine solder, at 30 cents	.15	
		2 days plumber and helper, repairing urinal waste, at $6	12.00	
				35.35
		Wash. B. Williams:		
	22.	73½ yards body Brussels, sewing and laying, at $1	73.50	
		57½ yards body Brussels, sewing and laying, at $1	57.75	
		42 yards body Brussels, sewing and laying, at $1	42.00	
		50¼ yards body Brussels, sewing and laying, at $1	50.75	
				224.00
		W. Andrew Boyd:		
	8.	4 copies Boyd's Directory of the District of Columbia, at $5		20.00
		Myron E. Pierce:		
	31.	1 whisperphone for telephone		2.00
		J. Edward Chapman:		
	28.	1 cord kindling wood	5.19	
		1 cord pine wood, sawed one cut	4.22	
		Storing, at 50 cents per cord	1.00	
				10.41
1889.		Cornelia Bond:		
	31.	Washing towels, for month of January, 1889, 49½ dozen, at 12 cents		5.91
		B. F. Thornton:		
		Furnishing and putting in place the following:		
		344 feet felt weather strip, No. 0, at 5 cents	17.20	
		440 feet felt weather strip, No. 1, at 6 cents	26.40	
		48 feet felt weather strip, No. 4, at 10 cents	4.80	
		Cutting sash cord on 7 windows, at 25 cents	1.75	
				50.15
1888.		W. D. Wyvill:		
Dec.	22.	Repairing and putting up stoves	6.00	
1889.				
Dec.	7.	Relining 2 fire-places with soap-stone	16.00	
	12.	2 evaporators, at $2.50	5.00	
	21.	1 pair B andirons, $10; 1 dome fender, $8	18.00	
		Time of bricklayer, building wall for floor-plates, ½ day's time, $7.50; 2 bushels of cement and sand, $2	9.50	

W. D. Wyvill—Continued.

21.	Repairing roof and new valley gutter, 280 sheets of XX tin, bright, at 20 cents	$56.00	
	18 days' time of 2 workmen and assistant, at $6	216.00	
	32 pounds of solder, at 25 cents	8.00	
	10 pounds of wire nails, at 5 cents	.50	
	1 gallon of metallic paint	1.25	
			$336.25
	G. G. C. Simms:		
31.	10 tooth-brushes, at 10 cents	1.00	
3.			
17.	1 pint of benzine	.10	
	1 quart oxalic acid	.50	
			1.60
	Great Falls Ice Company:		
31.	5,600 pounds ice, at 41 cents		22.96
	Washington Gas Light Company:		
	59,900 feet of gas consumed at No. 1507 Pennsylvania avenue, N. W., Department of Justice, in the month of January, 1889, at $1.25 net per M cubic feet		74.88
	James Ragan:		
7.	Repairing water closet, third story, new pull and drilling out plunger	2.50	
9.			
18.	Repairing urinal and 2 wash basins, and gas-pipes, first floor:		
	1 new pull urinal back	1.50	
19.	2 new pull Fuller basin cocks, at $2	4.00	
	2½-inch lead connections, at $2	2.50	
	One ½-inch stop-cock, at 90 cents; one ¾-inch stop-cock, at 70 cents	1.60	
	Two ½-inch trap thimbles, at 10 cents; four ½-inch nipples, at 10 cents; three ½-inch fittings, at 5 cents	.75	
	3 pounds solder, at 25 cents; 6 brass screws, at 4½ cents.	1.00	
	6 brass basin clamps, at 20 cents; 1 pound putty, at 10 cents	1.30	
	¼ peck plaster of Paris	.15	
22.	2½ days' time plumber, and assistant, at $6	15.00	
28.	One 14-inch basin, at $1.25; one ¾-inch stop-cock, 70 cents	1.95	
	One ½-inch nipple, 10 cents; 1 pound putty, 10 cents, 1 washer, 10 cents	.30	
	¼ peck plaster of Paris, 15 cents; 5½ hours' time, plumber and assistant, at 75 cents	4.27	
			36.82
	C. A. Schneider's Sons:		
19.	1 iron plate, 4 inch, 5½ by 17 by ¼ inches, 105 pounds, at 5 cents:		5.25
	H. L. Todd:		
11.	Repairing one gas governor, 45 light, and furnishing disk and valve for same		42.00
	Adams Express Company:		
8.	1 package, St. Louis, Mo., Department of Justice	.30	
22.	1 box, New York, Department of Justice	.40	
			.70
	Chesapeake and Potomac Telephone Company:		
31.	Exchange rental for chief clerk's room from Jan. 1, 1889, to Jan. 31, 1889, at $80	6.67	
	Exchange rental for Solicitor's office, Treasury Department, and Attorney-General's residence, from Jan. 1, 1889, to Jan. 31, 1889, at $60 each	10.00	
			16.67
	Royce & Marean:		
22.	Repairing electric annunciator and batteries	2.10	
26.	Furnishing and connecting 3 cells of dry battery for elevator bells	5.00	
1.			
5.	Furnishing the necessary material and re-arranging electric-bell wires	4.00	
24.	Repairing electric-bell wires	1.25	
			12.35

1889.				
		Wyckoff, Seaman & Benedict:		
Feb.	14.	1 No. 2 type-writer, head No. 29634	$80.00	
		1 8-drawer roll-top cabinet, special	65.00	
				$145.00
		Otis Brothers & Co.:		
Jan.	29.	2 2-inch stuffing-boxes	22.50	
		1 strap	4.50	
		Bolts	.16	
		Machine work on boxes	5.20	
		155 hours' labor, at 50 cents	77.50	
Feb.	8.	3 6-inch valve cups	3.00	
		2 pounds asbestos packing	.80	
		1 pound sheet rubber	.60	
		74 hours' labor, at 50 cents	37.00	
		Expenses	.20	
				151.4
		Charles A. Bruff:		
	4.	Repairing fence, making gate, and furnishing lumber, etc	16.00	
	8.	Furnishing lumber and putting up back fence and gate.	28.50	
		Furnishing and putting on Yale night-latch	3.00	
	11.	Carpet, and covering foot-rest	1.25	
		Changing door	1.00	
	12.	Putting weather-strip on window	.65	
		Repairing door, 75 cents; making, painting, and glazing 4 stair windows	44.75	
				95.1
		James Ragan:		
	15.	2 China hopper water-closets and tanks, safety pipes, walnut seats, all complete	56.50	
		1 China washout water-closet and tank, safety pipe and walnut seat, all complete	35.00	
		Repairing, plastering walls, material and labor	3.50	
				95.0
		Bureau of Engraving and Printing:		
Jan.	31.	Engraving 1 plate for miscellaneous commissions	113.00	
		Printing 46 impressions of miscellaneous commissions	13.15	
				126.1
		W. D. Wyvill:		
Feb.	6.	Casing fire-place	8.00	
	19.	34 gallons valvoline oil, at $1.75	59.50	
				67.5
		Cornelia Bond:		
	28.	Washing 46 dozen towels for Department of Justice during the month of February, at 12 cents		5.5
		James M. Hodges:		
		3 pounds white lead	.45	
		3 pounds green paint	.75	
		¼ pound yellow paint	.20	
		¼ pound maroon paint	.15	
		¼ gallon asphaltum	.60	
				2.1
		Great Falls Ice Company:		
		5,100 pounds ice, at 41 cents	20.91	
		Western Union Telegraph Company:		
Jan.	2.	Garland to Judd, Springfield, 19	.20	
	3.	Garland to Sanders, Fort Smith, Ark., 22	.24	
		Garland to Muir, Los Angeles, Cal., 21	.53	
	4.	Garland to Hawkins, Indianapolis, 43	.43	
	5.	Garland to Brockway, Elmira, N. Y., 35	.35	
		Howard to Lyon, Vicksburg, Miss., 23	.25	
	7.	Jenks to Stanley, New York, 40	.40	
		Garland to superintendent, Buffalo, 27	.27	
		Garland to Sandels, Fort Smith, Ark., 50	.55	
	8.	Garland to Peters, Salt Lake City, 20	.48	
		Howard to Perry, Topeka, Kans., 23	.30	
	9.	Garland to Carroll, Fort Smith, Ark., 30	.33	
		Garland to Marshal, Fort Smith, Ark., 30	.33	
		Garland to Walker, New York, 32	.32	
	10.	Garland to Sandels, Fort Smith, Ark., 24	.26	
		Garland from Bird, Portland, Me., 38	.32	

	Western Union Telegraph Company—Continued:		
11.	Garland to Bird, Portland, Me., 35	$.35	
12.	Garland to Marshal, Fort Smith, Ark., 29	.32	
	Garland to Claypool, Indianapolis, 32	.32	
	Howard to Jones, Shreveport, La., 30	.39	
	Howard to Lea, Vicksburg, Miss., 40	.44	
	Howard from Lea, Vicksburg, Miss., 31	.34	
14.	Howard from Lea, Vicksburg, Miss., 21	.23	
	May from Lisle, Philadelphia, 22	.22	
	Garland from Risley, Los Angeles, 34	.85	
15.	Howard from Lea, Vicksburg, Miss., 21	.23	
	Howard to Franson, Greenville, Miss., 28	.31	
	Howard to Lyon, Grand Lake, Ark., 29	.71	
	Garland to Guerry, Savannah, Ga., 19	.20	
	Western Union Telegraph Company:		
17.	May to Lisle, Philadelphia, 84	.34	
19.	Garland to Denson, Gadsden, Ala., 24	.24	
	Garland from Denson, Gadsden, Ala., 45	.45	
	Garland from Denis, Los Angeles, 46	1.15	
21.	Garland to Denis, Los Angeles, 17	.50	
	Garland to Williams, Knoxville, Tenn., 38	.38	
	Garland from Smith, Santa Fé, N. Mex., 60	1.26	
	Garland from Lyon, Leota, Miss., 35 (O. L. 51)	.88	
23.	Howard from Jones, Shreveport, La., 49	.64	
24.	Howard to Lyon, Grand Lake, Ark., 26 (O. L. 29.02)	.60	
	Garland from Bushnell, Madison, Wis., 39	.39	
26.	Jenks to Howard, New York, 21	.21	
	Smith to Howard, New York, 22	.22	
28.	Garland to Perry, Topeka, Kans., 46	.60	
	Garland to Rouse, Prescott, Ariz., 41 (O. L. 41)	1.44	
	Garland from Rouse, Prescott, Ariz., 43 (O. L. 43)	1.51	
	Howard from Lyon, Leota, Miss., 37 (O. L. 57)	.98	
29.	Howard to Lyon, Grand Lake, Ark., 24 (O. L. 25.02)	.53	
31.	Garland from Jordan, Abingdon, Va., 42 (O. L. 23.21)	.42	
			$23.21
	Western Union Telegraph Company:		
4.	Reeve to Rouse, Tucson, Ariz., 43	1.08	
10.	Reeve from Longino, Vicksburg, Miss., 36	.40	
14.	Cary from Smith, New York, 31	.31	
	Cary to Smith, New York, 19	.20	
	Cary to Pearre, Dallas, Tex., 42	.67	
			2.66
	Washington Gas-Light Company:		
b. 28.	31,500 feet of gas consumed at No. 1507 Pennsylvania avenue, N. W., Department of Justice, in the month of February, 1889, at $1.25 net per M cubic feet		39.38
	Chesapeake Postal Telephone Company:		
	Exchange rental for chief clerk's room, Feb. 1, 1889, to Feb. 28, 1889, at $80 per annum	6.67	
	Exchange rental for Solicitor's office in Treasury and Attorney-General's residence from Feb. 1, 1889, to Feb. 28, 1889, at $60 each per annum	10.00	
			16.67
	C. H. Burgess:		
11.	50 tons furnace coal, at $5.05	252.50	
28.	1 ton splint coal	6.50	
			259.00
	James Ragan:		
26.	1 N. P. Fullin basin-cock	2.00	
	3½ hours' time, plumber and helper	2.10	
	½ pound solder	.15	
			4.25
	D. Rickenbacher:		
n. 19.	Repairing 1 French clock in room 2, third floor		1.50
	Smith & Wardwell:		
ır. 12.	1 hair-brush	2.99	
	11 hair-brushes, at 99 cents	10.89	
	12 combs, at 25 cents	3.00	
			16.88

1889.		Myron E. Pierce:		
Mar.	15.	1 whisperphone for telephone		$2.0
		Charles A. Bruff:		
Feb.		Putting in 4 sash cords	$3.00	
		Making and putting up shelving	14.00	
				17.0
		Charles A. Bruff:		
Mar.	2.	Decorating building, and furnishing time, tacks, and rope		25.0
		W. D. Wyvill:		
	11.	6 fire shovels	1.50	
	14.	Altering flue and fire-place	10.00	
	15.	New grate and setting same	35.00	
	18.	Casing fire-place with fire-brick	12.00	
				58.5
		J. Edward Chapman:		
	9.	1 cord kindling wood	5.19	
		Stowing	.50	
	19.	2 cords select hickory wood, sawed 2 cuts, at $9.59	19.18	
		Stowing, at 50 cents per cord	1.00	
				25.8
		James Ragan:		
	12.	Repairing soil pipes and closets and replacing soil pipes, fourth floor; new floats for 2 closets, fourth floor; removing 2 china hoppers and replacing with 2 Niagara flush hoppers; also cleaning out and repairing gas pipes in elevator and halls:		
		5-feet 4-inch D. Hub. cast-iron pipe	2.10	
		5-feet 2-inch D. Hub. cast-iron pipe	1.50	
		One 4 by 4 sanitary X, $1.20; two 4-inch ¼ bends, $1.30; 1 inch ¼, 60 cents	3.10	
		One 2-foot ¼ bend, 35 cents; 2 Raymond ferrules, 75 cents	1.85	
		3 pounds fine solder, 75 cents; 2 copper floats, at $1.25	3.25	
		97 pounds sheet lead, 8 cents; one 4 by 2 Y, $1.20	8.96	
		40 pounds pig lead, 64 cents; 5 pounds packing, at 20 cents	3.40	
		12½ pounds putty, at 6 cents	.75	
		2 Niagara china hoppers in place of flush hoppers	8.00	
		Carpenters replacing floors, fourth story	3.50	
		4½ days' time, plumber and assistant, at $6	27.00	
				63.4
		Wyckoff, Seamans & Benedict:		
	8.	Remodeling type-writer No. 3477, order No. 466		22.0
		Cornelia Bond:		
	30.	Washing 52½ dozen towels for Department of Justice for March, 1889, at 12 cents		6.3
1888.		E. F. Brook:		
Dec.	28.	Clearing out gas fixture		.6
1889.		Great Falls Ice Company:		
Mar.	31.	5,500 pounds ice, at 41 cents		22.5
		Chesapeake and Potomac Telephone Company:		
		Exchange rental for chief clerk's room from March 1 to March 31, 1889, at $80	$6.67	
		Exchange rental for Solicitor's office, in Treasury, from March 1 to March 31, 1889, at $6	5.00	
		Exchange rental for Attorney-General's residence from March 1 to March 9, 1889, at $6	1.50	
				13.1
		Washington Gas Light Company:		
		58,800 feet of gas consumed at No. 1507 Pensylvania avenue N. W., Department of Justice, in the month of March, 1889, at $1.25 net per M cubic feet		73.5
		C. H. Burgess:		
		50 tons furnace coal, at $5.65		252.3
1888.		M. W. Beveridge:		
Dec.	22.	1½ dozen cuspidors, at $9 per doz	$7.50	
		1 dozen cuspidors	21.00	
		2 cuspidors, at $1.75 each	3.50	
				32.0

3.	Western Union Telegraph Company:		
1.	Howard to Hatch, New York, 45	$0.45	
	Garland to McEwen, Albany, 28	.28	
	Garland to Jordan, Abingdon, Va., 20	.20	
	Garland to Paul, Harrisonburgh, 46	.46	
	Garland to Paul, Richmond, 46	.46	
	Garland to Denis, Los Angeles, 23	.58	
4.	Garland to Allen, Mobile, 40	.40	
5.	Garland to Peters, Salt Lake, 34	.58	
6.	Garland from Peters, Salt Lake, 74	.79	
5.	Garland to McEwan, Albany, 41	.41	
7.	Garland to Warden, Michigan City, Ind., 35	.35	
	Garland from Warden, Michigan City, Ind., 14	.20	
	Hill to Adams, Burlington, Vt., 19	.20	
9.	Garland to Ingersoll, New York, 26	.26	
	Garland to Delmas, San Francisco, 43	1.08	
13.	Garland to Dundy, Omaha, Nebr., 27	.35	
	Boteler to Superintendent Auburn, 22	.22	
15.	Garland to Perry, Topeka, Kans, 33	.43	
	Garland to Hanley, Boisé City, Idaho, 37	.93	
	Garland to Carroll, Fort Smith, Ark, 22	.24	
16.	Garland to Walker, Milwaukee, 27	.27	
	Garland to Sill, Hartford, 38	.38	
18.	Garland to Hoadley, New York, 40	.40	
	Boteler to Bird, Portland, 31	.31	
	Boteler from Bird, Portland, 23	.23	
19.	Boteler to Wilson, Nashville, 36	.36	
	Howard to Denson, Gadsden, Ala., 23	.23	
20.	Boteler to Wickliff, Louisville, 21	.21	
	Boteler to Franks, San Francisco, 41	1.03	
	Robinson to Hardin, Spokane Falls, 29	.73	
	Garland to Semple, Olympia, Wash., 41	1.03	
	Western Union Telegraph Company:		
20.	Garland to Hamilton, Seattle, 54	1.35	
	Garland to Carr, Cheyenne, Wyo., 34	.61	
21.	Garland from Carr, Cheyenne, Wyo., 49	.88	
	Boteler to Murray, Norfolk, 28	.28	
	Jenks to Carey, San Francisco, 26	.65	
23.	Boteler to Murray, Norfolk, 19	.20	
	Garland to Davis, Philadelphia, 51	.51	
25.	Garland to McArthur, Portland, 23	.58	
	Boteler to Holtzelau, Montgomery, 21	.21	
	Howard to Lyon, East Brookfield, 24	.24	
	Howard to Porlange, New Orleans, 25	.33	
	Howard from Porlange, New Orleans, 36	.47	
26.	Garland from McArthur, Portland, Oregon, 92	2.30	
	Garland from Hardin, Seattle, Wash., 16	.50	
	Garland to Hardin, Seattle, Wash., 70	1.75	
	Garland to Crostwaite, Seattle, Wash., 61	1.53	
	Boteler to Dyer, Salt Lake City, 23	.55	
	Boteler to Lyon, East Brookfield, 22	.22	
	Jenks to Davis, Philadelphia, 34	.34	
27.	Garland to Marshall, Norfolk, 33	.33	
	Garland from Jones, Shreveport, La., 103	1.34	
	Garland from Carey, San Francisco, 57	1.43	
28.	Garland to Jones, Shreveport, La., 24	.33	
			$30.98
	Western Union Telegraph Company:		
1.	Carey to Love, Des Moines, 31	.37	
9.	Carey to Love, Keokuk, Iowa, 32	.38	
23.	Reeve to McArthur, Portland, 47	1.18	
			1.93
	Royce & Marean:		
14.	Labor and material furnished for repairing bells and batteries in Colonel Clay's office:		
	Electrician, 4 hours, at 50 cents	2.00	
	1 pound solution ammonia	.20	
	2 cells Leclanche battery, $1	2.00	
23.	Repairs to electric bell wires in Major Strong's office	1.00	
			5.20

1888.
George W. Knox:
Apr. 1. Freight on 1 case books .....

Adams Express Company:
Transportation as follows:
Feb. 9. 1 package, W. C. Grandy, Chicago.....

Adams Express Company:
Mar. 2. 1 package, Boston, Department of Justice....
18. 1 package, F. Brannagan, New York.....
29. 1 package, W. H. Ewing, Chicago.....

J. Baumgarten & Son:
Apr. 4. New spring on lever stamp .....

E. F. Brooks:
Mar. 11. 1 drop-light, complete.....

L. A. Trembley:
Apr. 22. 1 portrait frame for portrait of ex-Attorney-G

Thomas Folks:
Mar. 21. Repairing hinges, front door.....
Repairing lock, front door.....
Apr. 15. Putting in 2 sash-cords .....

Cornelia Bond:
30. Washing 46½ dozen towels for Department of
month of April, 1889, at 12 cents .....

S. J. Haislett:
May 2. Covering 5 window awnings.....

Julius H. Albers:
3. Repairing, cleaning, and new pendulum susp
French clock.....
Furnishing and putting up new walnut brack

Wyckoff, Seamans & Benedict:
Apr. 1. Repairs on type-writer No. 3417.....
19. Repairs on type-writer No. 4786.....
26. One 8-drawer roll-top cabinet.....
26. 1 dozen bottles oil.....
1 No. 931 pocket oiler.....

Washington Gas-light Company:
30. 70,700 feet of gas consumed at No. 1507 Pen
northwest, Department of Justice, in the mo
at $1.25 net per M cubic feet .....

Great Falls Ice Company:
5,500 pounds ice, at 41 cents.....

Chesapeake and Potomac Telephone Co
Exchange rental for chief clerk's room, from
April 30, 1889, at $80 per annum.....
Exchange rental for Solicitor's Office, Treasu
ment, from April 1 to April 30, 1889, at $60..

Davidson Steam Pump Company:
8. No. 4 stuffing-box complete.....

United States Express Company:
Feb. 19. 1 box from New York City (signed Sheibley)..
28. 1 box from New York City (signed S. H. Sente

H. W. Turpin:
May 8. 1 barrel of disinfectant solution.....
2 dozen cakes of disinfectant, at $1.25.....

John A. Baker:
11. 200 pounds bone-dust.....
1 bag plaster.....

J. Edward Chapman:
2. 1 cord hickory, sawed 2 cuts (selected).....
Stowing away .....

38.	Mutual District Messenger Company:		
27.	Messenger service as per ticket hereto attached	$0 .30	
2.	Messenger service as per ticket hereto attached	.10	
			$.40
	Adams Express Company:		
15.	1 package, G. E. Prickett, Omaha, Nebr	.25	
18.	1 package, S. A. Stalker, New York City	.50	
			.75
	C. H. Burgess:		
17.	50 tons furnace coal, at $5.05		252.50
	W. B. Moses & Son:		
13.	Laying 145 yards old matting, at 5 cents	$7.25	
17.	Laying 420 yards straw matting, at 5 cents	21.00	
			28.25
	Western Union Telegraph Company:		
1.	Howard to Jones, Shreveport, La., 28	.36	
	Garland from Crostwaite, Seattle, Wash., 18	.50	
	Garland from Kranthoff, Kansas City, 33	.36	
2.	Garland to Kranthoff, Kansas City, 23	.25	
	Garland to Rouse, Tucson, Ariz., 28	.73	
	Garland to Houghton, Fiskilwa, Ill., 23	.23	
	Garland from Houghton, Fiskilwa, Ill., 23	.23	
	Howard from Jones, Shreveport, 30	.39	
	Howard from Jones, Shreveport, 37	.48	
5.	Howard from Lyon, Shreveport, 24	.31	
	Garland from Corbell, Macon, 25	.25	
	Garland from McLean, Winnipeg, Manitoba, 23 (O. L. .39)	.77	
6.	Garland from Pearre, Waco, Tex., 80	1.28	
	Howard to Jones, Shreveport, La., 21	.27	
	Howard to Lyon, Shreveport, La., 19	.26	
	Goode to Clarke, Baltimore, 28	.28	
7.	Miller to Wilber, Brooklyn, 41	.41	
	Miller to House, Little Rock, 21	.23	
	Miller from Pearre, Waco, Tex., 90	1.44	
8.	Miller to Sewell, Camden, N. J., 23	.23	
	Boteler to Grant, Sitka, Alaska, 36 (O. L. .89, .02)	1.81	
	Howard to Jones, Shreveport, La., 24	.31	
	Howard from Jones, Shreveport, La., 70	.91	
9.	Howard to Lyon, Baton Rouge, 22	.29	
	Boteler to Hoge, city, 31	.31	
	Miller to Coffin, Columbus, 26	.26	
	Miller to Watts, Charleston, 45	.45	
	Miller to Pearre, Graham, Tex. 33 (O. L. 33)	.86	
11.	Miller to Walker, New York, 88	.88	
	Miller to Kranthoff, Kansas City, 21	.23	
	Miller from Kranthoff, Kansas City, 26	.29	
	Miller from Kranthoff, Kansas City, 105	1.40	
	Miller from Purcell, Bismarck, Dak., 24	.41	
	Miller from Rouse, Tucson, Ariz., 49	1.23	
	Miller from Rouse, Tucson, Ariz., 26	.65	
12.	Miller to Rouse, Tucson, Ariz., 38	.95	
	Miller to Purcell, Bismarck, Dak., 14	.34	
	Miller from Purcell, Bismarck, Dak., 13	.34	
	Miller from Purcell, Bismarck, Dak., 32	.54	
	Miller to Berkshire, Morganstown, W. Va., 30	.30	
	Miller to Walker, New York, 69	.69	
13.	Miller to Cockrum, Booneville, Ind., 20	.20	
	Howard to Lyon, Vicksburg, 27	.30	
	Howard to Pearre, Graham, Tex., 32 (O. L. 73)	1.24	
	Howard from Pearre, Graham, Tex., 30 (O. L. 64)	1.12	
	Howard from Maratta, Bismarck, Dak., 41	.70	
	Howard to Maratta, Bismarck, Dak., 34	.58	
14.	Howard to Rouse, Tucson, Ariz., 27	.68	
	Howard to Carey, San Francisco, 37	.93	
	Boteler to Hoge, city, 37	.39	
15.	Howard from Jones, Shreveport, La., 31	.47	
18.	Boteler to Sandels, Fort Smith, Ark., 26	.30	
	Miller to Robertson, Fort Wayne, Ind., 27	.27	
	Miller to Murphy, Sioux City, Iowa, 56	.51	
	Miller to Ingersoll, New York, 27	.22	

1888.			
		Western Union Telegraph Company—Continued.	
Mar.	19.	Miller to Sandels, Fort Smith, 40	$0.44
		Miller to Risley, Los Angeles, 24	.60
		Howard to White, Alexandria, La., 34	.44
		Howard to White, Alexandria, La., 52	.68
		Howard from White, Alexandria, La., 28	.36
		Howard from White, Alexandria, La., 25	.33
	20.	Boteler from Wickliff, Louisville, 21	.21
		Boteler to Wickliff, Louisville, 23	.23
		Miller to Ingersoll, New York, 35	.35
	21.	Miller to McNiece, Salt Lake, 23	.55
		Miller to Maxey, Austin, 20	.32
		Miller to Speer, Macon, Ga., 43	.43
		Miller from Spear, Macon, Ga., 75	.75
	22.	Miller from Spear, Macon, Ga., 53	.53
		Miller to Spear, Macon, Ga., 28	.28
		Miller from Boarman, Galveston, Tex., 45	.72
	23.	Miller to Whiteman, Albuquerque, 30	.63
		Miller to Hoadley, New York, 33	.33
		Miller to Hoadley, New York, 27	.27
		Wilson to Clark, Baltimore, 31	.31
		Howard from White, Alexandria, La., 45	.60
	25.	Boteler from Wickliff, Louisville, Ky., 22	.22
		Boteler to Wickliff, Louisville, Ky., 19	.20
		Wilson to Derby, West Point, 33	.33
		Miller to Walrond, Osborne, Kans., 31	.40
		Miller to Shackleford, Evansville, Ind., 30	.30
		Miller to Burford, Crawfordsville, 35	.35
		Miller to Boarman, Galveston, Tex., 21	.34
	26.	Miller to Shackleford, Evansville, 50	.50
		Miller to Coffin, Columbus, 36	.36
		Miller to Hammond, Atlanta, 34	.34
		Miller to Chandler, Atlanta, 34	.34
		Miller from Chandler, Atlanta, 41	.41
		Miller from Bunn, Utica, 20	.20
		Wilson from Derby, West Point, 26	.26
		Wilson from Derby, West Point, 43	.43
		May from Lisle, Philadelphia, 24	.24
	27.	Howard from Richmond, Elmira, N. Y., 26	.26
		Miller from Wickliff, Louisville, Ky., 39	.39
		Miller from Neal, Osceola, Mo., 26	.29
		Miller from Kleberg, Cuero, Tex., 27	.43
	28.	Miller to Irwin, Butte, Mont., 52	1.20
		Miller to Hess, Indianapolis, 28	.28
		Miller to Hess, Indianapolis, 13	.20
	29.	Miller to postmaster, Muskogee, Ind. T., 33	.43
		Miller to Billings, New Orleans, 62	.81
		Miller to Shackleford, Cumberland, 33	.33
	30.	Miller to Alexander, Buffalo, 25	.25
		Miller to Wickliffe, Louisville, 29	.29
		Miller to Wickliffe, Louisville, 50	.51
		Miller from Gross, Louisville, 1.00	1.00
	22.	Boteler to Cheadle, Seattle, 21	.50
			$52.72
		Western Union Telegraph Company:	
	2.	Reeve to Neill, Calais, Me., 19	.20
	15.	Reeve to Shields, Cleveland, 37	.37
		Reeve to Pritchett, Omaha, 39	.51
	20.	Cary to Duryee, Newark, N. J., 41	.41
			1.49
		Otis Brothers & Co.:	
Apr.	16.	40 hours' labor, at 50 cents	20.00
		Candles	.15
			20.15
		Charles W. Steers:	
May	24.	Cutting (with scythe) the grass upon the grounds adjoining Department of Justice building	3.00
		Cornelia Bond:	
	31.	Washing 52½ day towels for Department of Justice building	6.34

D. Rickenbacher:
29. Repairing one French clock 5.00

United Rubber Company:
23. 2 patent rubber mats adapted to Remington type-writer, at $2 each 4.00

J. Baumgarten & Son:
21. Rubber stamp for use of appointment clerk $0.75
5. 1 stamp 1.00
1 bottle ink ..... .50
2.25

J. Hall Semmes:
28. 25 pounds soda, at 4 cents 1.00
26. 25 pounds soda, at 4 cents 1.00
19. 2 wicks, at 5 cents ..... .10
3 dozen Pears' soap, at $1.75 ..... 5.25
7.35

Adams Express Company:
For transportation as follows:
2. 1 package, W. G. Ewing, Chicago, Ill ..... .60
8. 1 package, W. C. Barney, Baltimore, Md ..... .30
23. 1 package, Boston, librarian Department of Justice .... .80
1.70

A. F. Loose:
2. 2 bottles Eureka metal polish, at 25 cents ..... .50

J. Baumgarten & Son:
20. 1 self-inker $1.50
24. 1 pad ..... .50
2.00

Cornelia Bond:
29. Washing 52½ dozen towels for Department of Justice, at 12 cents. 6.33

G. G. C. Simms:
31. ½ dozen tooth-brushes, ... $1.00
26. 2 pint bottles benzine, bottle, 20 cents ..... .50
14. ¼ dozen nail brushes 2.80
¼ dozen Royal glue ..... .15
¼ dozen chamois skins 1.70
6.15

M. W. Beveridge:
12. 1 soap-dish, brush, vase, and mug 2.25

EXHIBIT F 12.—BUILDING, DEPARTMENT OF JUSTICE (REPAIRS TO HEATING APPARATUS).

1888.
Robert Leitch & Sons:
Sept. 13. 12 valve-caps, at 75 cents $9.00

W. H. Tupper & Co.:
Aug. 23. 1 set grate bars, 7 pieces 45.98

Kane & Roache:
Oct. 25. 1 hour, plumber and helper, repairing heater in chief clerk's room 60

W. D. Wyvill:
Dec. 12. Removing 2 heating radiators from the third to the fifth floor, Department of Justice, 60 feet 1-inch pipe, $6; 24 nippers, $2.40 ..... $8.40
4 bushings, at 15 cents ..... .60
25 ells, at 20 cents 5.00
6 tees, at 25 cents 1.50
4 Jenkins' nickel valves, at $5 ..... 20.00
2 automatic air-valves, at $1 ..... 2.00
Bronzing 2 radiators, at $4 ..... 8.00
Labor of two steam-fitters, 6 days each, at $5 ..... 60.00
105.50

BUILDING DEPARTMENT OF JUSTICE (FIFTH FLOOR ROOMS).

1888.	C. H. Tyler & Son:		
Dec. 29.	Plastering the various rooms on the fifth floor of the Department of Justice building, as per agreement of September 11, 1888	$220.00	
	Furnishing chimney-pots	5.00	
	Patching plastering on walls	5.00	
			230.00
1889.	Gove, Janney & Co.:		
Feb. 23.	File-cabinet, 7 tiers of 17 files and 6 drawers		220.00
	F. Petersen:		
June 12.	239 yards Brussels, at 95 cents	$227.52	
	150 yards of lining, at 10 cents	15.00	
17.	83¼ yards Brussels, at 95 cents	79.08	
	50 yards lining, at 10 cents	5.00	
			326.60
	S. J. Haislett:		
27.	7 window awnings, at $4 each		28.00
	M. W. Beveridge:		
29.	1 dozen cuspidors		8.00

EXHIBIT G.—*Statement of amounts paid for fees of supervisors of elections (section 3689, Revised Statutes) for the Congressional elections of November, 1888, during fiscal year ending June 30, 1889.*

State.	Amount paid.		Repayments.
	District.	State.	
Alabama, northern district	$184.65	$2,256.35	$975.00
Alabama, middle and southern districts	2,071.70		
Arkansas, eastern district	40.00	40.00	40.00
California, northern district	10,805.00	12,525.00	
California, southern district	1,720.00		
Colorado	3,560.45	3,560.45	
Delaware	8.10	8.10	
Florida, northern district	294.95	294.95	
Georgia, northen district	40.00	40.00	
Illinois, northern district	30,050.00	30,050.00	
Indiana	3,187.96	3,187.96	10.00
Kentucky	6,215.86	6,215.86	
Louisiana, eastern district	9,429.75	9,429.75	5.00
Maryland	9,900.00	9,900.00	90.00
Massachusetts	17,080.00	17,080.00	
Michigan, eastern district	3,050.00	5,410.00	
Michigan, western district	360.00		
Mississippi, northern district	143.45	238.82	
Mississippi, southern district	94.87		
Missouri, eastern district	8,477.05	8,477.05	
New Jersey	4,980.00	4,980.00	
New York, northern district	15,488.40	84,983.91	1,640.66
New York, eastern district	22,162.90		
New York, southern district	47,392.61		
North Carolina, eastern district	180.30	247.60	
North Carolina, western district	67.30		
Ohio, southern district	8,592.40	8,592.40	
Oregon	358.15	358.15	
Pennsylvania, eastern district	41,328.25	46,528.25	220.00
Pennsylvania, western district	5,200.00		
South Carolina	540.00	540.00	
Tennessee, eastern district	202.70	656.05	
Tennessee, western district	453.35		
Texas, northern district	59.25	963.75	880.00
Texas, eastern district	619.50		
Texas, western district	185.00		
Virginia, eastern district	2,692.23	3,901.98	
Virginia, western district	1,209.75		
Total	258,365.88	258,365.88	3,370.00

H.—*Statement of the names of assistants to the United States attorneys and amount of annual and special compensation.*

REGULAR ASSISTANTS.

District.	Name.	Compensation.	Remarks.
northern	L. A. Dobbs	$1,200	To June 30, 1889.
	James Jackson	1,200	From July 2, 1889.
middle	George F. Moore	1,200	
eastern	J. E. Williams	1,200	To April 11, 1889.
	Samuel R. Allen	1,200	From April 12, 1889.
western	Charles M. Cook	2,000	To May 31, 1889.
	Wm. M. Mellette	2,000	From June 1, 1889.
	Edward J. Fannin	1,200	From July 18, 1889.
northern	Charles L. Weller	2,000	
	Jackson Hatch	2,500	
	Milton G. Cage	1,500	To May 31, 1889.
	William H. Bryant	1,500	From June 1, 1889.
	J. C. Murphy	2,000	To May 20, 1889.
	Joseph B. Kelley	2,000	From May 28, 1889.
rthern	William Phillips	2,000	To March 29, 1889.
	E. A. Angier	2,000	From March 29, 1889.
thern	Oliver E. Pagin	2,000	
	Graham H. Harris	2,200	To September 15, 1889.
	Thomas E. Milchrist	2,200	From September 16, 1889.
thern	William H. Dawdy	1,500	To June 30, 1889.
	John C. Matthis	1,500	From July 5, 1889.
	Leon O. Bailey	1,500	To March 12, 1889.
	John B. Cockrum	1,500	From March 12, 1889.
	do	2,000	From July 1, 1889.
ern	William Graham	1,500	
ern	Denis Donovan	900	
	Eugene Hagan	1,500	To October 31, 1889.
	Pliny L. Soper	1,500	From November 1, 1889.
	T. C. Bell	1,500	To August 31, 1889.
	George DuRelle	1,500	From September 1, 1889.
eastern	J. W. Gurley	2,500	
tts	Thomas H. Talbot	2,000	
	Boardman Hall	1,200	
astern	Charles T. Wilkins	2,000	
vestern	A. C. Adsit	1,000	
	Henry C. Wood	1,200	To June 30, 1889.
	Rolla E. Noyes	1,200	From July 1, 1889.
astern	F. M. Knapp	1,500	To May 15, 1889.
	Medford H. Cahoon	1,500	From May 15, 1889.
	W. M. Hough	1,200	To June 15, 1889.
	E. P. Johnson	1,200	From June 15, 1889.
vestern	W. M. Rush	1,500	To June 6, 1889.
	Thomas J. Delaney	1,000	To May 17, 1889.
	McLain Jones	2,000	From July 6, 1889.
	R. W. Patrick	1,000	
y	W. D. Daly	800	To November 6, 1889.
o	Harrison Burnes	1,200	To January 31, 1889.
	William S. Hoyt	2,500	To June 30, 1889.
	John E. Smith	2,500	From July 1, 1889.
	Samuel M. Welch	2,500	To October 16, 1889.
	Nathaniel W. Norton	2,500	From October 16, 1889.
eastern	J. L. Devenney	1,500	To September 3, 1889.
	John Oakey	1,500	From September 3, 1889.
southern	MacGrane Coxe	2,500	To November 1, 1889.
	J. T. Van Rensselaer	2,500	From November 1, 1889.
	Abram J. Rose	3,000	
	H. C. Platt	3,000	
	W. W. Smith	2,500	
	Daniel O'Connell	1,800	
	Thomas Greenwood	2,500	
lina, western	George F. Bason	1,700	To June 18, 1889.
	Marshall L. Mott	1,700	From June 18, 1889.
ern	S. D. Dodge	1,000	
ern	John E. Bruce	2,000	To August 5, 1889.
	Harry R. Probasco	2,000	From August 5, 1889.
	Talford P. Linn	1,200	To June 18, 1889.
	Jason W. Firestone	1,200	From June 18, 1889.
	James H. Cleveland	1,200	
ia, eastern	James M. Beck	2,200	
	W. Wilkins Carr	2,200	
ia, western	Thomas S. Alcorn	2,500	
lina	H. A. DeSaussure	2,000	
	C. M. Furman	1,500	
eastern	George W. Henderson	1,200	To April 20, 1889.
	Henry M. Wiltse	1,200	From April 20, 1889.
middle	A. N. Miller	1,200	

EXHIBIT H.—*Statement of the names of assistants to the United States Attorneys and amount of annual and special compensation*—Continued.

REGULAR ASSISTANTS—Continued.

District.	Name.	Compensation.	Remarks.
Tennessee, western	H. C. Anderson	$1,200	To May 16, 1889.
Do	John E. McCall	1,200	From May 16, 1889.
Texas, eastern	Joseph H. Wilson	1,000	From August 27, 1889.
Texas, western	Solon Stewart	1,200	To May 21, 1889.
Do	Henry Terrell	1,200	From May 21, 1889.
Utah	W. J. Clarke	2,000	To December 21, 1889.
Do	Ogden Hiles	1,500	To January 7, 1889.
Do	....do	2,000	From January 7 to September 11, 1889.
Do	David Evans	1,500	From January 7, 1889.
Do	William McKay	2,000	From September 11, 1889.
Virginia, eastern	James Lyons	1,500	To August 3, 1889.
Do	Lemuel C. Bristow	1,500	From August 3, 1889.
Virginia, western	F. B. Hutton	1,200	To July 13, 1889.
Do	David F. Baily	1,200	From July 13, 1889.
West Virginia	William R. Thompson	1,000	To April 20, 1889.
Do	Samuel C. Burdett	1,000	From April 20, 1889.
Washington	Charles F. Munday	None	
Wisconsin, eastern	E. E. Chapin	3,000	In Fox and Wisconsin River cases.
Do	A. E. Thompson	*250	Do.
Wisconsin, western	W. H. Rogers	1,500	

SPECIAL ASSISTANTS.

District.	Name.	Employment.	Appointed.	Compensation.
Alabama, northern	Lionel W. Day	October term of court at Huntsville.	Oct. 21, 1889	To be determined by the Attorney-General.
Alabama, middle	George H. Patrick	v. Eugene Beebe *et al.*	Oct. 22, 1889	Do.
Alabama, southern	Thomas H. Smith	v. F. O. Harden and J. H. Davis, violation of sec. 5431, R. S. U. S.	June 10, 1889	Do.
Arizona	J. Frank Wilson	Prosecution of nine criminal cases for perjury.	Jan. 28, 1889	Do.
Do	Harry R. Jeffords	Prosecute men arrested for robbery of Paymaster Wham.	May 18, 1889	Do.
Do	William Henning	Prosecute men arrested for robbery of Paymaster Wham.	Sept. 13, 1889	Do.
Do	S. M. Franklin	Prosecute men arrested for robbery of Paymaster Wham.	....do	Do.
Do	Calvert Wilson	Term of court at Phœnix.	Nov. 1, 1889	None.
Arkansas, eastern	John McClure	Election cases	April 9, 1889	To be determined by the Attorney-General.
Arkansas, western	Zach. Taylor	Investigate alleged defalcation of funds paid Creek and Seminole Indians.	Aug. 6, 1889	Do.
California, northern	D. M. Delmas	v. Benson, Richert, Riley, *et al.*, for fraudulent claims and false surveys presented against the Government.	Nov. 22, 1887	$100 per day for each day's actual service.
Do	W. W. Foote	v. F. G. Borneman, charged with embezzlement.	June 14, 1888	To be determined by the Attorney-General.
Do	David Lauderbach	In U. S. v. Terry	July 1, 1889	Do.
California, southern	J. H. Call	v. Colton Marble and Lime Company.	Oct. 3, 1888	Do.

*Per month.

H.—*Statement of the names of assistants to the United States Attorneys and amount of annual and special compensation*—Continued.

SPECIAL ASSISTANTS—Continued.

rict.	Name.	Employment.	Appointed.	Compensation.
southern.	J. H. Call.....	Cancel certain land patents issued to South. Pac. R. R. Co.	Dec. 27, 1888	To be determined by the Attorney-General.
.....	....do	Cancel certain land patents issued to South. Pac. R. R. Co.	Jan. 17, 1889	Do.
.....	H. W. Hobson	In various cases.....	May 20, 1889	$5,000 per annum for those and other services.
Columbia	Hugh T. Taggart	Establish title to Potomac Flats.	Dec. 15, 1886	To be determined by the Attorney-General.
.....	W. H. H. Hart	Collecting forfeited recognizances.	Jan. 5, 1888	15 per cent. of amount collected.
orthern...	Horatio Bisbee...	Motion to quash venire for jury.	Oct. 9, 1889	To be determined by the Attorney-General.
.....	Ezra P. Axtell....	For the term of 40 days.	Oct. 29, 1889	Do.
.....	James R. Challen	November term of court at Jacksonville.	Nov. 7, 1889	Do.
outhern ..	James Atkins	*v.* E. C. Wade, late U. S. marshal, *et al.*	Aug. 6, 1889	Do.
.....	H. W. Hobson	*v.* Northern Pacific R. R. Co.; Montana Improvement *et al.*	Oct. 5, 1887	$5,000 per annum for these and other services, (to Sept. 30, 1889).
.....	D. W. Standrod...	For July term of court at Blackfoot.	June 21, 1889	To be determined by the Attorney-General.
.....	....do	During Sept., Oct., and Nov., 1889.	Aug. 31, 1889	$100 per month.
.....	....do	*v.* W. F. Kettenbach *et al.* (Hibbs' case).	Nov. 7, 1889	To be determined by the Attorney-General.
.....	Solomon Claypool	*v.* U. S. marshal *et al.* in connection with election of Nov. 6, 1888.	Nov. 23, 1888	Do.
.....	....do	Election case.....	Dec. 15, 1888	Do.
thern	Ellwood C. Hughes	To recover title to unearned railroad land grant.	Dec. 19, 1888	Do.
.....	John Y. Stone	*v.* Des Moines Navigation and Railroad Company.	July 8, 1889	Do.
.....	Eugene F. Ware..	*v.* Martha Insley *et al.*	June 22, 1889	Do.
, eastern..	James Wilkinson	Case of Pferdmenges, Preyer & Co. and L. Ruch *v.* B. F. Jonas, collector of customs.	Jan. 24, 1889	None.
, western.	M. C. Elstner	Timber trespass cases.	Dec. 3, 1888	To be determined by the Attorney-General.
.....	C. J. Boatner.....	....do	Feb. 28, 1889	Do.
.....	M. C. Elstner	Public land cases in June and July at Opelousas and Alexandria.	June 6, 1889	Do.
setts.....	G. P. Sanger	Wm. G. Smoot *v.* J. G. Benton.	Jan. 14, 1887	Do.
.....	G. P. Lowrey.....	Bell telephone case..	....do	Do.
.....	A. G. Thurman ...	....do	....do	Do.
.....	Hunton & Chandler.	....do	....do	$5,000 in full.
.....	W. C. Strawbridge	....do	....do	$1,000 in full.
.....	C. S. Whitman	....do	....do	$3,000 in full, and $20 per day taking testimony.
.....	George A. Jenks..	....do	May 17, 1889	$5,000 per annum.
western..	Willard Kingsley.	*v.* Ryan, an ejectment suit for land bought by the Government.	Dec. 6, 1888	To be determined by the Attorney-General.

EXHIBIT H.—*Statement of the names of assistants to the United States Attorneys and amount of annual and special compensation*—Continued.

SPECIAL ASSISTANTS—Continued.

District.	Name.	Employment.	Appointed.	Compensation.
Missouri, eastern	Charles C. Allen	v. Chas. E. Tozer *et al.* for violation of interstate-commerce act.	Dec. 5, 1888	None.
Missouri, western	Lewis C. Krauthoff.	Case of Jas. Bannon v. Jas. Burnes *et al.*	Jan. 23, 1889	To be determined by the Attorney-General.
Montana	H. W. Hobson	v. Northern Pacific R. R. Co. and Montana Improvement Co.	Oct. 5, 1887	$5,000 per annum for these and other services (to Sept. 30, 1889).
Do	D. C. Campbell	June term of court at Bozeman.	June 4, 1889	To be determined by the Attorney-General.
Nebraska	H. W. Hobson	v. Isaac Coe and Levi Carter.	Oct. 5, 1887	$5,000 per annum for these and other services (to Sept. 30, 1889).
Do	Jas. L. Caldwell	v. Union Pacific R. R. Co. and Western Union Telegraph Co., under chapter 772, laws of 1888.	July 22, 1889	To be determined by the Attorney-General.
Nevada	Henry Rives	v. Richmond Mining Co. and Eureka Consolidated Mining Co. *et al.* for timber trespass.	Feb. 2, 1889	Do.
New York, northern	John N. Beckley	v. Lester B. Faulkner *et al.* for violating sec. 5209, R. S. U. S.	April 26, 1889	None.
Do	Daniel N. Lockwood.	v. Lester B. Faulkner *et al.* for violating sec. 5209, R. S. U. S.	July 26, 1889	To be determined by the Attorney-General.
Oregon	Wm. C. Johnson	For forfeiture of wagon-road grants.	July 8, 1889	Do.
Tennessee, western	W. W. Murray	Election cases	July 10, 1889	Do.
Do	Hugh C. Anderson	October term of court at Jackson.	Oct. 19, 1889	$10 per day.
Utah	H. W. Hobson	v. The Perpetual Emigrating Fund Co. and Church of Jesus Christ of Latter Day Saints.	Oct. 5, 1887	$5,000 per annum for these and other services (to Sept. 30, 1889).
Virginia, eastern	F. H. Whitehurst	Election cases	Nov. 14, 1888	To be determined by the Attorney-General.
Do	Floyd Hughes	....do	....do	Do.
Washington	H. W. Hobson	v. Northern Pacific R. R. Co.	Oct. 5, 1887	$5,000 per annum for these and other services (to Sept. 30, 1889).
Do	Thos. B. Hardin	In various timber trespass cases.	Feb. 13, 1889	To be determined by the Attorney-General.
Do	....do	....do	Feb. 15, 1889	To be determined by the Attorney-General.
Washington	....do	....do	Feb. 15, 1889	Do.
Wyoming	H. W. Hobson	v. Isaac Coe and Levi Carter.	Oct. 5, 1887	$5,000 per annum for these and other services (to Sept. 30, 1889).

EXHIBIT I.—*Report of the Solicitor of the Treasury.*

DEPARTMENT OF JUSTICE,
OFFICE OF THE SOLICITOR OF THE TREASURY,
Washington, D. C., October 30, 1889.

R: I have the honor to transmit herewith seven tabular statements, biting the amounts, character, and results of the litigation under direction, for the fiscal year ending June 30, 1889, shown by the ket entries of this office.

hese tables embrace respectively—

) Suits on transcripts of accounts of defaulting public officers, ex- ting those of the Post-Office Department, adjusted by the accounting ers of the Treasury Department.

2) Post-office suits, embracing those against officers of the Post-Office partment, and cases of fines, penalties, and forfeitures for violation ostal laws.

3) Suits on custom-house bonds.

4) Suits for the recovery of fines, penalties, and forfeitures under customs revenue and navigation laws.

5) Suits against collectors of customs and other officers or agents of Government, excepting internal-revenue officers, for refund of duties l acts done in line of their official duty.

6) Suits in which the United States is a party, or is interested, not braced in the other classes.

7) A general summary or abstract of all the other tables.

An examination of the tables will show that the whole number of its commenced within the year was 4,866, of which 29 were of class for the recovery of $96,515.22; 359 were of class 2, for the recovery $93,778.31; 26 were of class 3, for the recovery of $8,142.31; 200 re of class 4, for the recovery of $51,458.12; 1,849 were of class 5, d 2,403 were of class 6, for the recovery of $13,180,378.89, making a al sued for, as reported, of $13,430,272.85.

Of the whole number of suits brought, 1,614 were decided in favor of United States, 51 were adversely decided, 396 were settled and dis- ssed, in 12 penalties were remitted by the Secretary of the Treasury, ving 2,793 still pending.

Of those pending at the commencement of the year, 861 were decided the United States, 144 were decided adversely, 1,064 were settled d dismissed, and in 6 penalties were remitted by the Secretary of Treasury.

The whole number of suits decided or otherwise disposed of during year was 4,148; the whole amount for which judgments were ob- ned, exclusive of decrees *in rem*, was $454,250.74, and the entire ount collected from all sources was $288,252.02.

The number of cases in which offers of compromise were pending l received during the fiscal year was 101, involving the sum of 916,633.14.

The number of offers accepted was 46, involving the sum of $1,300,004.88; amount accepted, $76,008.53.

The number of offers rejected was 39, involving the sum of $434,665.84; amount rejected, $39,621.20.

The number of offers pending at the close of the fiscal year was 16, involving the sum of $181,962.42; amount offered in cases pending, $5,075.77.

Statements of real property under charge of this office acquired and sold during the fiscal year, of property the title to which has been otherwise relinquished, and of suits brought by the United States for possession of land by law in charge of this office are appended hereto.

The number of letters and communications received by this office during the fiscal year was 9,077; the number of official bonds, contracts, and leases received for examination as to their correctness in form and as to their legal sufficiency and returned was 876; the number of letters and communications sent out was 4,393; and the number of opinions rendered on questions of law submitted by the Secretary of the Treasury, or by the heads of bureaus of the Treasury Department, was 84.

The various dockets of this office show that the sum of about $35,000,000, principal and interest, is due the Government, evidenced by judgments of the circuit and district courts. No reliable estimate of the value of these judgments can be given; many were obtained long years ago, and in many instances, through neglect, the lien of the judgment has been lost.

In other instances the present residence of the debtor is unknown. Debtors are in every State and Territory of the Union. No person is particularly charged with the duty of discovering the debtors, unearthing their property, or collecting the money of the Government. No adequate means of payment for services necessary to secure collection are provided for. The district attorneys, marshals, and clerks naturally feel but little interest in these old matters. This office has been engaged in earnest endeavors to make collections, but is constantly hampered by a want of proper facilities. Extensive and painstaking correspondence with the officers above named has been engaged in, looking to the discovery of debtors and assets. In a great majority of instances these efforts have met with commendable co-operation; but the services thus called forth are unremunerated, and are a heavy tax upon the time and unrequited zeal of the officers, and the results are far from satisfactory.

I therefore take the liberty to recommend that you ask Congress for an appropriation of $10,000, to be expended under your direction, in payment for services to be rendered in hunting up these debtors and their property, in order that collection of these judgments be made. The appropriation of $500 for the purchase of books for the library of this office is insufficient to meet the demand upon it. I ask that you recommend its increase to $1,000.

Very respectfully, your obedient servant,

W. P. HEPBURN,
Solicitor.

Hon. W. H. H. MILLER,
Attorney-General of the United States.

Judicial districts.	In suits brought during the fiscal year.								In suits brought prior to the fiscal year.								
	Number of suits.	Aggregate sued for.	Aggregate in judgment.	Collections.	Decided for the United States.	Decided against the United States.	Settled, dismissed, etc.	Pending.	Judgments in old suits.	Collections in old suits.	Decided for the United States.	Decided against the United States.	Settled, dismissed, etc.	Total judgments in favor of United States.	Total suits disposed of.	Total judgments.	Total collections.
Alabama, northern district																	
Alabama, middle district																	
Alabama, southern district																	
Arkansas, eastern district										$4,564.67							$4,564.67
Arkansas, western district																	
California, northern district	3	$87,731.58						3		87.59							87.59
California, southern district																	
Colorado	2	18,518.15						2		5,113.30			2		2		5,113.30
Connecticut																	
Delaware																	
Florida, northern district										169.30							169.30
Florida, southern district																	
Georgia, northern district	1	578.72						1									
Georgia, southern district	1	1,350.94						1									
Illinois, northern district	1	1,128.95						1		2,500.00							2,500.00
Illinois, southern district																	
Indiana																	
Iowa, northern district																	
Iowa, southern district										728.12							728.12
Kansas									$613.07	50.00	1		1	1	2	$613.07	50.00
Kentucky																	
Louisiana, eastern district	1	20,161.81		$8,311.03				1									8,311.03
Louisiana, western district	1	1,253.84						1									
Maine																	
Maryland																	
Massachusetts	1	4,754.26						1	1,890.60		1			1	1	1,890.60	
Michigan, eastern district									94.86	1,096.18	1		1	1	2	94.86	1,096.18
Michigan, western district										1,311.34			1		1		1,311.34
Minnesota	1	376.00						1		50.00			1		1		50.00
Mississippi, northern district																	
Mississippi, southern district	2	4,456.26	$4,333.40	209.40	1			1						1	1	4,333.40	209.40

No. 3.—*Report of suits on custom-house bonds instituted during the fiscal year ending June 30, 1889, in the several United States courts, and of proceedings had during said period in suits which were instituted prior thereto.*

Judicial districts.	In suits brought during the fiscal year.								In suits brought prior to the fiscal year.					Total judgments for United States during the year.	Total suits disposed of.	Total judgments.	Total collections.
	Number of suits.	Aggregate sued for.	Aggregate in judgment.	Collections.	Decided for the United States.	Decided against the United States.	Settled, dismissed, etc.	Pending.	Judgments in old suits.	Decided for the United States.	Decided against the United States.	Settled, dismissed, etc.	Collections in old suits.				
California, northern district	1	$51.24	$51.24	$51.24	1	.....	.....	.....	.....	.....	.....	.....	.....	1	1	$51.24	$51.24
Louisiana, eastern district	14	2,097.88	389.54	99.04	7	.....	2	5	.....	.....	.....	1	$420.49	7	10	389.54	519.53
Massachusetts	1	100.00	.....	.....	.....	.....	.....	1	$186.89	1	.....	1	50.00	1	2	186.89	50.00
Michigan, eastern district	.....	.....	.....	.....	.....	.....	.....	.....	.....	.....	.....	5	.....	.....	5	.....	.....
Minnesota	.....	.....	.....	.....	.....	.....	.....	.....	.....	.....	.....	1	14.00	.....	1	.....	14.00
New York, eastern district	.....	.....	.....	.....	.....	.....	.....	.....	.....	.....	.....	22	.....	.....	22	.....	.....
New York, southern district	6	5,672.69	.....	.....	.....	.....	1	5	.....	.....	.....	3	1,487.28	.....	4	.....	1,487.28
Ohio, northern district	1	69.40	.....	.....	.....	.....	.....	1	.....	.....	.....	.....	.....	.....	.....	.....	.....
Pennsylvania, eastern district	2	98.72	.....	64.97	.....	.....	1	1	.....	.....	.....	.....	.....	.....	1	.....	64.97
Texas, eastern district	.....	.....	.....	.....	.....	.....	.....	.....	42.70	1	.....	.....	.....	1	1	42.70	.....
Texas, western district	1	52.38	.....	52.38	.....	.....	.....	1	.....	.....	.....	.....	.....	.....	.....	.....	52.38
Total	26	8,142.31	440.78	267.63	8	.....	4	14	229.59	2	.....	33	1,971.77	10	47	670.37	2,239.40

No. 4.—*Report of suits for fines, penalties, and forfeitures under the customs, revenue, and navigation laws, instituted during the fiscal year ending June 30, 1889, in the several United States courts, and of proceedings had during said period in suits which were instituted prior thereto.*

Judicial districts.	In suits brought during the fiscal year.									In suits brought prior to the fiscal year.						Total judgments in favor of U. S.	Total suits disposed of.	Total judgments.	Total collections.
	Number of suits.	Aggregate sued for.	Aggregate in judgment.	Collections.	Decided for the U. S.	Decided against U. S.	Settled, dismissed, etc.	Remitted.	Pending.	Judgments in old suits.	Collections in old suits.	Decided for the U. S.	Decided against U. S.	Settled, dismissed, etc.	Remitted.				
Alabama, northern district																			
Alabama, middle district																			
Alabama, southern district																			
Arkansas, eastern district	1	$100.00		$34.30			1										1		$34.30
Arkansas, western district																			
California, northern district	14	1,000.00	$150.00	8,220.75	11				3	$200.00	$7,395.00	2		1		13	14	$359.00	15,615.75
California, southern district	2		500.00	187.00	2						20.50			1		2	3	500.00	207.50
Colorado																			
Connecticut	1	50.00		83.56			1				41.87			1			2		125.43
Delaware																			
Florida, northern district																			
Florida, southern district	4	4,345.12	50.00	560.00	1		2		1							1	3	50.00	560.00
Georgia, northern district																			
Georgia, southern district																			
Illinois, northern district	6				2				4		1,012.45					2	2		1,012.45
Illinois, southern district											318.87								318.87
Indiana											5,465.88	1		1		1	2		5,465.88
Iowa, northern district	5		600.00	48.41	3		1		1	1,050.00	700.00	1				4	5	1,650.00	748.41
Iowa, southern district												1				1	1		
Kansas																			
Kentucky																			
Louisiana, eastern district	4	1,400.00		215.00				2	2					1			3		215.00
Louisiana, western district	2	600.00		10.00				1	1								1		10.00
Maine	3	1,000.00	50.00	222.80	2			1			4,072.33			2		2	5	50.00	4,295.13
Maryland	1								1										
Massachusetts	6	3,950.00	500.00	544.75	1		2	1	2	653.25	50.00	6		1		7	11	1,153.25	594.75
Michigan, eastern district	15	1,700.00	2,915.00	9,482.90	11		1		3		1,000.00			2		11	14	2,915.00	10,482.90
Michigan, western district	1	1,000.00						1		30.00	127.20	1			1	1	3	30.00	127.20
Minnesota	1				1											1	1		
Mississippi, northern district																			
Mississippi, southern district										200.00		2				2	2	200.00	
Missouri, eastern district	2	200.00					1		1		3,200.00						1		3,200.00
Missouri, western district																			
Nebraska																			
Nevada																			
New Hampshire																			
New Jersey	16	13,790.44		1,380.55	1		2	2	11		400.00				4	1	9		1,780.55

No. 4. *Report of suits for fines, penalties, and forfeitures under the customs, revenue, and navigation laws, etc.*—Continued.

Judicial districts.	In suits brought during the fiscal year.									In suits brought prior to the fiscal year.						Total judgments in favor of U.S.	Total suits disposed of.	Total judgments.	Total collections.
	Number of suits.	Aggregate sued for.	Aggregate in judgment.	Collections.	Decided for the U.S.	Decided against U.S.	Settled, dismissed, etc.	Remitted.	Pending.	Judgments in old suits.	Collections in old suits.	Decided for the U.S.	Decided against U.S.	Settled, dismissed, etc.,	Remitted.				
New York, northern district	7	.....	$1,325.00	$425.00	7	.....	.....	.....	.....	$10,000.00	$50.00	1	.....	.....	.....	8	8	$11,325.00	$475.00
New York, southern district	68	$3,524.56	1,678.00	4,994.57	48	.....	1	1	18	.....	13,780.49	2	.....	1	.....	50	53	1,678.00	18,725.06
New York, eastern district	1	1,000.00	.....	.....	.....	.....	1	.....	.....	.....	.....	.....	.....	9	.....	.....	10	.....	.....
North Carolina, eastern district	.....	.....	.....	.....	.....	.....	.....	.....	.....	.....	.....	.....	.....	.....	.....	.....	.....	.....	.....
North Carolina, western district	.....	.....	.....	.....	.....	.....	.....	.....	.....	.....	.....	.....	.....	.....	.....	.....	.....	.....	.....
Ohio, northern district	5	900.00	100.00	74.10	1	.....	1	2	1	.....	170.40	.....	.....	2	.....	1	6	100.00	244.50
Ohio, southern district	.....	.....	.....	.....	.....	.....	.....	.....	.....	.....	268.60	.....	.....	.....	1	.....	1	.....	268.60
Oregon	9	1,000.00	525.00	1,480.88	7	.....	.....	1	1	100.00	100.00	1	.....	.....	.....	8	9	625.00	1,580.88
Pennsylvania, eastern district	1	50.00	.....	.....	.....	.....	.....	.....	1	.....	.....	.....	1	.....	.....	.....	1	.....	.....
Pennsylvania, western district	.....	.....	.....	.....	.....	.....	.....	.....	.....	.....	.....	.....	.....	.....	.....	.....	.....	.....	.....
Rhode Island	2	.....	200.00	.....	2	.....	.....	.....	.....	.....	.....	.....	.....	.....	.....	2	2	200.00	.....
South Carolina	.....	.....	.....	.....	.....	.....	.....	.....	.....	.....	.....	.....	.....	1	.....	.....	1	.....	.....
Tennessee, eastern district	.....	.....	.....	.....	.....	.....	.....	.....	.....	.....	.....	.....	.....	.....	.....	.....	.....	.....	.....
Tennessee, middle district	.....	.....	.....	.....	.....	.....	.....	.....	.....	.....	.....	.....	.....	.....	.....	.....	.....	.....	.....
Tennessee, western district	.....	.....	.....	.....	.....	.....	.....	.....	.....	.....	.....	.....	.....	.....	.....	.....	.....	.....	.....
Texas, northern district	.....	.....	.....	.....	.....	.....	.....	.....	.....	.....	.....	.....	.....	.....	.....	.....	.....	.....	.....
Texas, eastern district	.....	.....	.....	.....	.....	.....	.....	.....	.....	.....	.....	.....	.....	.....	.....	.....	.....	.....	.....
Texas, western district	4	.....	30.00	30.00	4	.....	.....	.....	.....	.....	.....	.....	1	2	.....	4	7	30.00	30.00
Vermont	.....	.....	.....	.....	.....	.....	.....	.....	.....	200.00	200.00	1	.....	.....	.....	1	1	200.00	200.00
Virginia, eastern district	.....	.....	.....	.....	.....	.....	.....	.....	.....	.....	.....	.....	.....	.....	.....	.....	.....	.....	.....
Virginia, western district	.....	.....	.....	.....	.....	.....	.....	.....	.....	.....	.....	.....	.....	.....	.....	.....	.....	.....	.....
West Virginia	.....	.....	.....	.....	.....	.....	.....	.....	.....	.....	.....	.....	.....	.....	.....	.....	.....	.....	.....
Wisconsin, eastern district	.....	.....	.....	.....	.....	.....	.....	.....	.....	.....	.....	.....	.....	.....	.....	.....	.....	.....	.....
Wisconsin, western district	.....	.....	.....	.....	.....	.....	.....	.....	.....	.....	.....	.....	.....	.....	.....	.....	.....	.....	.....
Alaska	.....	.....	.....	.....	.....	.....	.....	.....	.....	700.00	1,914.10	1	.....	.....	.....	1	1	700.00	1,914.10
Arizona	2	.....	50.00	50.00	2	.....	.....	.....	.....	.....	.....	.....	.....	1	.....	2	3	50.00	50.00
Dakota	.....	.....	.....	.....	.....	.....	.....	.....	.....	.....	.....	.....	.....	.....	.....	.....	.....	.....	.....
Idaho	.....	.....	.....	.....	.....	.....	.....	.....	.....	.....	.....	.....	.....	.....	.....	.....	.....	.....	.....
Indian Territory	.....	.....	.....	.....	.....	.....	.....	.....	.....	.....	.....	.....	.....	.....	.....	.....	.....	.....	.....
Montana	.....	.....	.....	.....	.....	.....	.....	.....	.....	.....	.....	.....	.....	.....	.....	.....	.....	.....	.....
New Mexico	.....	.....	.....	.....	.....	.....	.....	.....	.....	.....	.....	.....	.....	.....	.....	.....	.....	.....	.....
Utah	.....	.....	.....	.....	.....	.....	.....	.....	.....	.....	.....	.....	.....	.....	.....	.....	.....	.....	.....
Washington	17	15,848.00	425.00	2,560.19	8	.....	.....	.....	9	.....	1,701.34	.....	.....	.....	.....	8	8	425.00	4,261.53
Wyoming	.....	.....	.....	.....	.....	.....	.....	.....	.....	.....	.....	.....	.....	.....	.....	.....	.....	.....	.....
District of Columbia	.....	.....	.....	.....	.....	.....	.....	.....	.....	.....	.....	.....	.....	.....	.....	.....	.....	.....	.....
Total	200	51,458.12	9,098.00	30,604.76	114	.....	14	12	60	13,133.25	41,939.03	20	3	26	6	134	194	22,281.25	72,543.79

New Jersey	4																
New York, northern district	12	800.00	1,005.00	500.00	11			1	200.00	200.00				8	8	595.00	495.00
New York, southern district	8		595.00	495.00	8												
New York, eastern district	1	176.24						1									
North Carolina, eastern district									371.67	40.00					2	371.67	40.00
North Carolina, western district	5	1,680.38	10.00		1			4						1	1	10.00	
Ohio, northern district	13	1,226.69	1,175.00	820.29	11	1		1		227.71	3			14	15	1,175.00	1,048.00
Ohio, southern district	5	1,184.50	324.06	115.00	3			2	251.87	284.84	2			5	5	575.93	399.84
Oregon	4		350.00	350.00	4									4	4	350.00	350.00
Pennsylvania, eastern district	7	103.04	938.78	158.34	7					107.29	2			9	9	938.78	265.63
Pennsylvania, western district	9	224.93	875.45		8			1						8	8	875.45	
Rhode Island	4		315.00	300.00	4									4	4	315.00	300.00
South Carolina	4	268.87	818.03	216.20	4				958.68	1,008.12	1			5	5	1,276.71	1,224.32
Tennessee, eastern district	3	381.02	100.00	65.60	2		1							2	3	100.00	65.60
Tennessee, middle district	1		100.00		1									1	1	100.00	
Tennessee, western district	2		125.00		2									2	2	125.00	
Texas, northern district	6	1,851.04	1,987.98	2,004.52	6									6	6	1,987.98	2,004.52
Texas, eastern district	3	724.52	110.11		2			1						2	2	110.11	
Texas, western district	6	1,031.41	250.00		1			5						1	1	250.00	
Vermont	2		75.00	49.50	2				101.00	143.29	2			4	4	176.00	192.79
Virginia, eastern district	5	786.70	435.10	348.23	4	1								4	5	435.10	348.23
Virginia, western district	2	1,182.02						2									
West Virginia	2	26.66	300.00	300.00	1			1		240.00	3			4	4	300.00	540.00
Wisconsin, eastern district	1		100.00	100.00	1									1	1	100.00	100.00
Wisconsin, western district	4	3,572.19	100.00	100.00	1			3						1	1	100.00	100.00
Alaska																	
Arizona	3	528.62						3									
Dakota	8	6,251.23	973.02		1			7						1	1	973.02	
Idaho																	
Indian Territory																	
Montana	1	113.44						1									
New Mexico										1,376.85			2		2		1,376.85
Utah	22	15,864.20	69.21	125.16	1			21		7.00	1			2	2	69.21	132.16
Washington																	
Wyoming	1	188.71						1									
District of Columbia	12	3,554.40	3,554.40		12									12	12	3,554.40	
Total	359	93,778.21	35,056.96	13,489.85	210	2	7	140	4,634.25	10,138.68	36	3	13	246	271	39,691.21	23,628.53

No. 3.—*Report of suits on custom-house bonds instituted during the fiscal year ending June 30, 1889, in the several United States courts, and of proceedings had during said period in suits which were instituted prior thereto.*

Judicial districts.	In suits brought during the fiscal year.								In suits brought prior to the fiscal year.					Total judgments for United States during the year.	Total suits disposed of.	Total judgments.	Total collections.
	Number of suits.	Aggregate sued for.	Aggregate in judgment.	Collections.	Decided for the United States.	Decided against the United States.	Settled, dismissed, etc.	Pending.	Judgments in old suits.	Decided for the United States.	Decided against the United States.	Settled, dismissed, etc.	Collections in old suits.				
California, northern district	1	$51.24	$51.24	$51.24	1	.....	.....	.....	.....	.....	.....	.....	.....	1	1	$51.24	$51.24
Louisiana, eastern district	14	2,097.88	889.54	99.04	7	.....	2	5	.....	.....	.....	1	$420.49	7	10	889.54	519.53
Massachusetts	1	100.00	.....	.....	.....	.....	.....	1	$186.89	1	.....	1	50.00	1	2	186.89	50.00
Michigan, eastern district	.....	.....	.....	.....	.....	.....	.....	.....	.....	.....	.....	5	.....	.....	5	.....	.....
Minnesota	.....	.....	.....	.....	.....	.....	.....	.....	.....	.....	.....	1	14.00	.....	1	.....	14.00
New York, eastern district	.....	.....	.....	.....	.....	.....	.....	.....	.....	.....	.....	22	.....	.....	22	.....	.....
New York, southern district	6	5,672.69	.....	.....	.....	.....	1	5	.....	.....	.....	3	1,487.28	.....	4	.....	1,487.28
Ohio, northern district	1	69.40	.....	.....	.....	.....	.....	1	.....	.....	.....	.....	.....	.....	.....	.....	.....
Pennsylvania, eastern district	2	98.72	.....	64.97	.....	.....	1	1	.....	.....	.....	.....	.....	.....	1	.....	64.97
Texas, eastern district	.....	.....	.....	.....	.....	.....	.....	.....	42.70	1	.....	.....	.....	1	1	42.70	.....
Texas, western district	1	52.38	.....	52.38	.....	.....	.....	1	.....	.....	.....	.....	.....	.....	.....	.....	52.38
Total	26	8,142.31	440.78	267.63	8	.....	4	14	229.59	2	.....	33	1,971.77	10	47	670.37	2,239.40

30, 1889, *in the several United States* [illegible]

Judicial districts.	In suits brought during the fiscal year.									In suits brought prior to the fiscal year.						Total judgments in favor of U. S.	Total suits disposed of.	Total judgments.	Total collections.
	Number of suits.	Aggregate sued for.	Aggregate in judgment.	Collections.	Decided for the U. S.	Decided against U. S.	Settled, dismissed, etc.	Remitted.	Pending.	Judgments in old suits.	Collections in old suits.	Decided for the U. S.	Decided against U. S.	Settled, dismissed, etc.	Remitted.				
Alabama, northern district																			
Alabama, middle district																			
Alabama, southern district																			
Arkansas, eastern district	1	$100.00		$34.30			1										1		$34.30
Arkansas, western district																			
California, northern district	14	1,000.00	$150.00	8,220.75	11				3	$200.00	$7,395.00	2		1		13	14	$350.00	15,615.75
California, southern district	2		500.00	187.00	2						20.50			1		2	3	500.00	207.50
Colorado																			
Connecticut	1	50.00		83.56			1				41.87			1			2		125.43
Delaware																			
Florida, northern district																			
Florida, southern district	4	4,345.12	50.00	560.00	1		2		1							1	3	50.00	560.00
Georgia, northern district																			
Georgia, southern district																			
Illinois, northern district	6				2				4		1,012.45					2	2		1,012.45
Illinois, southern district											318.87								318.87
Indiana											5,465.88	1		1		1	2		5,465.88
Iowa, northern district	5		600.00	48.41	3		1		1	1,050.00	700.00	1				4	5	1,650.00	748.41
Iowa, southern district												1				1	1		
Kansas																			
Kentucky																			
Louisiana, eastern district	4	1,400.00		215.00				2	2					1			3		215.00
Louisiana, western district	2	600.00		10.00				1	1								1		10.00
Maine	3	1,000.00	50.00	222.80	2			1			4,072.33			2		2	5	50.00	4,295.13
Maryland	1								1										
Massachusetts	6	3,950.00	500.00	544.75	1		2	1	2	653.25	50.00	6		1		7	11	1,153.25	594.75
Michigan, eastern district	15	1,700.00	2,915.00	2,482.90	11		1		3		1,000.00			2		11	14	2,915.00	10,482.90
Michigan, western district	1	1,000.00						1		30.00	127.20	1			1	1	3	30.00	127.20
Minnesota	1				1											1	1		
Mississippi, northern district																			
Mississippi, southern district										200.00		2				2	2	200.00	
Missouri, eastern district	2	200.00					1		1		3,200.00						1		3,200.00
Missouri, western district																			
Nebraska																			
Nevada																			
New Hampshire																			
New Jersey	16	13,790.44		1,380.55	1		2	2	11		400.00				4	1	9		1,780.55

No. 6—*Report of miscellaneous suits instituted during the fiscal year ending June 30, 1889, in the several United States courts, and of proceedings had during said period in suits which were instituted prior thereto.*

Judicial districts.	In suits brought during the fiscal year.								In suits brought prior to the fiscal year.					Total judgments in favor of the United States.	Total of suits disposed of.	Total judgments.	Total collections.
	Number of suits.	Aggregate sued for.	Aggregate in judgment.	Collections.	Decided for the United States.	Decided against the United States.	Settled, dismissed, etc.	Pending.	Judgments in old suits.	Collections in old suits.	Decided for the United States.	Decided against the United States.	Settled, dismissed, etc.				
Alabama, northern district	296	$48,050.00	$12,670.06	$291.37	88	.....	43	165	$3,800.00	$347.86	52	....	44	140	227	$21,470.00	$639.23
Alabama, middle district	79	8,600.00	1,710.00	.....	18	.....	13	48	4,340.00	465.91	47	....	29	65	107	6,050.00	465.91
Alabama, southern district	87	11,100.00	4,940.55	2,254.83	55	.....	28	4	4,250.68	3,377.54	119	1	9	174	212	9,191.23	5,632.37
Arkansas, eastern district	20	250.00	3,820.00	954.05	18	.....	.....	2	2,048.50	1,586.39	2	....	4	20	24	5,868.50	2,540.44
Arkansas, western district	202	16,977.50	11,610.00	542.75	177	.....	9	16	3,510.00	473.57	13	....	7	190	206	15,120.00	1,016.32
California, northern district	59	658,940.87	1,793.00	692.00	12	.....	2	45	55,745.73	2,931.14	9	3	4	21	30	57,588.73	3,623.14
California, southern district	11	18,500.00	305.00	302.00	7	.....	1	3	450.00	200.00	3	1	....	10	12	755.00	502.00
Colorado	59	220,983.91	698.31	950.75	12	2	9	36	9,029.58	6,367.29	32	3	22	44	80	9,728.89	7,318.04
Connecticut	9	450.00	1,330.00	1,912.25	9	.....	.....	.....	.....	.....	.....	.....	.....	9	9	1,330.00	1,912.25
Florida, northern district	10	4,000.00	280.05	670.15	8	.....	.....	2	.....	.....	.....	.....	.....	8	8	280.05	670.15
Florida, southern district	2	1,000.00	1,062.29	1,062.29	2	.....	.....	.....	.....	.....	.....	3	.....	2	5	1,062.29	1,062.29
Georgia, northern district	111	25,000.00	3,888.75	120.43	23	.....	39	50	11,550.00	672.10	45	....	27	68	134	15,438.75	792.53
Georgia, southern district	3	.....	201.00	.....	3	.....	.....	.....	.....	18.35	.....	.....	2	3	5	201.00	18.89
Illinois, northern district	3	.....	53.00	108.54	3	.....	.....	.....	400.00	371.73	2	.....	.....	5	5	453.00	480.27
Illinois, southern district	15	10,000.00	3,725.00	422.20	11	1	2	1	1,777.06	4,169.82	1	....	1	12	16	5,502.06	4,592.02
Indiana	14	.....	631.00	.....	14	.....	.....	.....	150.00	310.38	4	.....	.....	18	18	781.00	310.38
Iowa, northern district	1	.....	1.00	.....	1	.....	.....	.....	.....	.....	.....	.....	.....	1	1	1.00	.....
Iowa, southern district	2	1,200.00	.....	.....	.....	.....	1	1	.....	.....	.....	.....	1	.....	2	.....	.....
Kansas	35	14,200.00	116.00	.....	20	.....	1	14	2,306.47	1,242.25	19	9	12	39	61	2,422.47	1,242.25
Kentucky	8	750.00	530.00	.....	6	.....	.....	2	2,910.00	1,501.92	7	....	3	13	16	3,440.00	1,501.92
Louisiana, eastern district	3	2,842.46	909.09	1,001.83	1	.....	.....	2	583.75	2,981.60	1	....	4	2	6	1,442.84	3,983.43
Louisiana, western district	31	47,239.12	3,777.87	85.15	15	3	.....	13	976.85	15.00	8	3	5	23	39	4,754.72	100.15
Maine	10	825.00	1,192.00	172.20	8	.....	1	1	656.67	658.73	3	....	2	11	14	1,848.67	830.93
Maryland	13	.....	1,303.00	202.00	13	.....	.....	.....	50.00	50.00	1	....	1	14	15	1,353.00	252.00
Massachusetts	96	26,239.18	1,351.10	609.65	41	.....	4	51	2,555.62	3,903.01	9	1	6	50	61	3,906.72	4,512.66
Michigan, eastern district	12	6,224.16	2,015.00	400.00	7	.....	1	4	1.00	170.62	1	....	21	8	30	2,016.00	570.62
Michigan, western district	9	780.00	3,971.29	1,646.00	6	.....	.....	3	8,628.82	800.00	12	.....	.....	18	18	12,600.11	2,446.00
Minnesota	44	299,962.87	834.00	375.00	22	.....	.....	22	12,879.74	1,490.04	24	2	14	46	62	13,718.74	1,865.04
Mississippi, northern district	31	8,900.00	1,029.00	10.60	3	8	8	12	500.00	.....	2	2	5	5	28	1,529.00	10.60
Mississippi, southern district	15	8,660.00	2,452.50	1,172.27	13	.....	.....	2	1,300.45	1,361.77	7	3	2	20	25	3,752.95	2,534.04

Missouri, eastern district	35	12,000.00	4,327.00	514.99	23			12	109.00	38.11	2		2	25	27	4,436.00	553.10
Missouri, western district	149	400.00	5,145.46	473.66	128		15	6	4,660.00	732.97	10			138	153	9,805.46	1,206.63
Nebraska	21	1,881.12	415.50	312.58	19	1		1	50.00	1,889.14	2		4	21	26	465.50	2,201.72
Nevada	11	10,674,800.00	1,000.00		1			10	50.00	306.89	1			2	2	1,050.00	306.89
New Hampshire										687.60							687.60
New Jersey	14	5,200.00	3,000.00		8			6	1,000.00		1			9	9	4,000.00	
New York, northern district	44	7,289.98	4,411.41	325.00	39			5	2,106.80	75.00	6			45	45	6,518.21	400.00
New York, southern district	59	146,795.81	598.13	4,902.51	27	1	10	21	2,360.83	1,154.50	13	1	8	40	60	2,958.96	6,057.01
New York, eastern district	9	66.70	7.00		7	1		1						7	8	7.00	
North Carolina, eastern district	8	500.00	300.00	14.10	2		1		100.00	16.00	1		7	3	11	400.00	30.10
North Carolina, western district	107	20,400.00	3,600.00		18		24	65	11,520.00	76.76	57	1	16	75	116	15,120.00	76.76
Ohio, northern district	10	800.00	480.00		9			1	200.00		1			10	10	680.00	
Ohio, southern district	11	24,134.16	990.00	605.08	9	1		1	737.00		2	2	2	11	16	1,727.00	605.08
Oregon	109	326,576.12	2,151.00	1,660.00	90		1	18	1,045.00	1,077.82	6	2	1	96	100	3,196.00	2,737.82
Pennsylvania, eastern district	24	4,724.96	3,305.00	66.21	21			3						21	21	3,305.00	66.21
Pennsylvania, western district	21	1,000.00	290.00		20			1	20.00	10.87	2		1	22	23	310.00	10.87
Rhode Island									1,047.00	1,143.24	48			48	48	1,047.00	1,143.24
South Carolina	11		1,100.00		11				200.00		2			13	13	1,300.00	
Tennessee, eastern district	17	3,000.00	325.00	20.80	4		4	9	10,325.00	252.45	15		10	19	33	10,650.00	273.25
Tennessee, middle district	45	16,400.00	3,100.00	202.25	8		14	23	10,600.00	21,129.65	23		9	31	54	13,700.00	21,331.90
Tennessee, western district	57	7,725.00	150.00	116.15	3		33	21	4,125.00	250.00	19		8	22	63	4,275.00	366.15
Texas, northern district	26	26,985.00	1,696.54	503.08	8	1	15	2	450.00	551.75	3	2	9	11	38	2,146.54	1,054.83
Texas, eastern district	14	21,322.80	370.00	10.00	4	1	2	7	850.00	53.74	4	2	2	8	15	1,220.00	63.74
Texas, western district	9	23,700.00	2,010.00		3		1	5	1,907.00	1,000.00	2		1	5	7	3,917.00	1,000.00
Vermont	2	300.00	300.00	300.00	2									2	2	300.00	300.00
Virginia, eastern district	6	4,422.80	3,852.80	3,559.16	5	1			600.00		2			7	8	4,452.80	3,559.16
Virginia, western district	42	7,400.00	2,910.00	15.00	11		17	14	300.00		2		7	13	37	3,210.00	15.00
West Virginia	9		475.00	121.75	9				1,126.00	580.35	6			15	15	1,601.00	702.10
Wisconsin, eastern district	21	22,416.00	1,156.00	653.00	18			3	1,607.00	60.00	6			24	24	2,763.00	713.00
Wisconsin, western district	6	2,543.60	296.60	222.60	3			3	192.00	993.34	1		9	4	13	488.60	1,215.94
Alaska	11	5,156.00			1			10			1		1	2	3		
Arizona	7		328.00	530.79	6			1	.01	366.71	1	4	9	7	20	328.01	897.50
Dakota	4	6,000.00	100.00	50.00	4				70.00	670.33	3		1	7	8	170.00	720.33
Idaho	6	15,078.00	597.00	100.00	6				560.00	366.25	4		8	10	18	1,157.00	366.25
Indian Territory	11	3,200.00	466.00		9			2						9	9	466.00	
Montana	6	4,000.00			1	1	1	3	11,275.00	11,311.50	4	1		5	8	11,275.00	11,311.50
New Mexico	25	110,000.00	101.00	287.91	11		3	11	700.00	2,101.60	3		4	14	21	801.00	2,389.51
Utah	117	206,862.68	18,190.67	6,770.90	101			16	38,207.00	13,092.85	88	7	2	189	198	56,397.67	19,863.75
Washington	31	25,528.69	651.00	607.60	8	2		21	25.00	714.27	2	7	2	16	21	676.00	1,321.87
Wyoming									1,100.00	7,529.65	4	2	3	4	9	1,100.00	7,529.65
District of Columbia	2	105.00						2	640.41	10,305.74	1		1	1	2	640.41	10,305.74
Total	2,403	13,180,378.89	136,387.41	38,902.83	1,273	24	303	803	245,215.97	113,906.10	771	67	352	2,044	2,790	381,603.38	152,808.93

No. 6—*Report of miscellaneous suits instituted during the fiscal year ending June 30, 1889, in the several United States courts, and of proceedings had during said period in suits which were instituted prior thereto.*

Judicial districts.	In suits brought during the fiscal year.								In suits brought prior to the fiscal year.					Total judgments in favor of the United States.	Total of suits disposed of.	Total judgments.	Total collections.
	Number of suits.	Aggregate sued for.	Aggregate in judgment.	Collections.	Decided for the United States.	Decided against the United States.	Settled, dismissed, etc.	Pending.	Judgments in old suits.	Collections in old suits.	Decided for the United States.	Decided against the United States.	Settled, dismissed, etc.				
Alabama, northern district	296	$48,050.00	$12,670.00	$291.37	88	.....	43	165	$8,800.00	$347.86	52	....	44	140	227	$21,470.00	$639.23
Alabama, middle district	79	8,600.00	1,710.00	.....	18	.....	13	48	4,340.00	465.91	47	....	29	65	107	6,050.00	465.91
Alabama, southern district	87	11,100.00	4,940.55	2,254.88	55	.....	28	4	4,250.68	3,877.54	119	1	9	174	212	9,191.23	5,632.37
Arkansas, eastern district	20	250.00	3,820.00	954.05	18	.....	.....	2	2,048.50	1,586.39	2	....	4	20	24	5,868.50	2,540.44
Arkansas, western district	202	16,977.50	11,610.00	542.75	177	.....	9	16	3,510.00	473.57	13	....	7	190	206	15,120.00	1,016.32
California, northern district	59	658,940.87	1,793.00	692.00	12	.....	2	45	55,745.73	2,931.14	9	3	4	21	30	57,538.73	3,623.14
California, southern district	11	18,500.00	305.00	302.00	7	.....	1	3	450.00	200.00	3	1	....	10	12	755.00	502.00
Colorado	59	220,983.91	698.81	950.75	12	2	9	36	9,029.58	6,367.29	32	3	22	44	80	9,728.39	7,318.04
Connecticut	9	450.00	1,330.00	1,912.25	9	.....	.....	.....	.....	.....	.....	.....	.....	9	9	1,330.00	1,912.25
Florida, northern district	10	4,000.00	280.05	670.15	8	.....	.....	2	.....	.....	.....	.....	.....	8	8	280.05	670.15
Florida, southern district	2	1,000.00	1,062.29	1,062.29	2	.....	.....	.....	.....	.....	.....	.....	3	2	5	1,062.29	1,062.29
Georgia, northern district	111	25,000.00	3,388.75	120.43	23	.....	39	50	11,550.00	672.10	45	....	27	68	134	15,438.75	792.53
Georgia, southern district	3	.....	201.00	.....	3	.....	.....	.....	.....	18.35	.....	.....	2	3	5	201.00	18.89
Illinois, northern district	3	.....	53.00	106.54	3	.....	.....	.....	400.00	371.73	2	.....	.....	5	5	453.00	480.27
Illinois, southern district	15	10,000.00	3,725.00	422.20	11	1	2	1	1,777.06	4,169.83	1	....	1	12	16	5,502.06	4,592.02
Indiana	14	.....	631.00	.....	14	.....	.....	.....	150.00	310.38	4	.....	.....	18	18	781.00	310.38
Iowa, northern district	1	.....	1.00	.....	1	.....	.....	.....	.....	.....	.....	.....	.....	1	1	1.00	.....
Iowa, southern district	2	1,200.00	.....	.....	.....	.....	1	1	.....	.....	.....	.....	1	.....	2	.....	.....
Kansas	35	14,200.00	116.00	.....	20	.....	1	14	2,306.47	1,242.25	19	9	12	39	61	2,422.47	1,242.25
Kentucky	8	750.00	530.00	.....	6	.....	.....	2	2,910.00	1,501.92	7	....	3	13	16	3,440.00	1,501.92
Louisiana, eastern district	3	2,842.46	909.09	1,001.83	1	.....	.....	2	533.75	2,981.60	1	....	4	2	6	1,442.84	3,983.43
Louisiana, western district	31	47,239.12	8,777.87	85.15	15	3	.....	13	976.85	15.00	8	3	5	23	39	4,754.72	100.15
Maine	10	925.00	1,192.00	172.20	8	.....	1	1	656.67	658.73	3	....	2	11	14	1,848.67	830.93
Maryland	13	.....	1,303.00	202.00	13	.....	.....	.....	50.00	50.00	1	....	1	14	15	1,353.00	252.00
Massachusetts	96	26,229.18	1,351.10	609.65	41	.....	4	51	2,555.62	3,903.01	9	1	6	50	61	3,906.72	4,512.66
Michigan, eastern district	12	6,234.18	2,015.00	400.00	7	.....	1	4	1.00	170.62	1	....	21	8	30	2,016.00	570.62
Michigan, western district	9	750.00	5,971.29	1,648.00	6	.....	.....	3	8,628.82	800.00	12	....	.....	18	18	12,600.11	2,448.00
Minnesota	44	299,982.87	834.00	275.00	22	.....	.....	22	12,879.74	1,490.04	24	2	14	46	62	13,713.74	1,865.04
Mississippi, northern district	31	8,900.00	1,029.00	10.00	3	3	3	12	500.00	.....	2	2	5	5	29	1,529.00	10.00
Mississippi, southern district	15	8,660.00	2,452.50	1,172.27	13	.....	.....	2	1,300.45	1,361.77	7	3	2	20	25	3,752.95	2,534.04

New York, eastern district	9	66.70	7.00		7	1		1						7	8	7.00	
North Carolina, eastern district	8	500.00	300.00	14.10	2		1		100.00	16.00	1		7	8	11	400.00	30.10
North Carolina, western district	107	20,400.00	3,600.00		18		24	65	11,520.00	76.76	57	1	16	75	116	15,120.00	76.76
Ohio, northern district	10	800.00	480.00		9			1	200.00		1			10	10	680.00	
Ohio, southern district	11	24,134.16	990.00	605.08	9	1		1	737.00		2	2	2	11	16	1,727.00	605.08
Oregon	109	326,576.12	2,151.00	1,660.00	90		1	18	1,045.00	1,077.82	6	2	1	96	100	3,196.00	2,737.82
Pennsylvania, eastern district	24	4,724.96	3,305.00	66.21	21			3						21	21	3,305.00	66.21
Pennsylvania, western district	21	1,000.00	290.00		20			1	20.00	10.87	2		1	22	23	310.00	10.87
Rhode Island									1,047.00	1,143.24	48			48	48	1,047.00	1,143.24
South Carolina	11		1,100.00		11				200.00		2			13	13	1,300.00	
Tennessee, eastern district	17	3,000.00	325.00	20.80	4		4	9	10,325.00	252.45	15		10	19	33	10,650.00	273.25
Tennessee, middle district	45	16,400.00	3,100.00	202.25	8		14	23	10,600.00	21,129.65	23		9	31	54	13,700.00	21,331.90
Tennessee, western district	57	7,725.00	150.00	116.15	3		33	21	4,125.00	250.00	19		8	22	63	4,275.00	366.15
Texas, northern district	26	26,985.00	1,696.54	503.08	8	1	15	2	450.00	551.75	3	2	9	11	38	2,146.54	1,054.83
Texas, eastern district	14	21,322.80	370.00	10.00	4	1	2	7	850.00	53.74	4	2	2	8	15	1,220.00	63.74
Texas, western district	9	23,700.00	2,010.00		3		1	5	1,907.00	1,000.00	2		1	5	7	3,917.00	1,000.00
Vermont	2	300.00	300.00	300.00	2									2	2	300.00	300.00
Virginia, eastern district	6	4,422.80	3,852.80	3,559.16	5	1			600.00		2			7	8	4,452.80	3,559.16
Virginia, western district	42	7,400.00	2,910.00	15.00	11		17	14	300.00		2		7	13	37	3,210.00	15.00
West Virginia	9		475.00	121.75	9				1,126.00	580.35	6			15	15	1,601.00	702.10
Wisconsin, eastern district	21	22,416.00	1,156.00	653.00	18			3	1,607.00	60.00	6			24	24	2,763.00	713.00
Wisconsin, western district	6	2,543.60	296.60	222.60	3			3	192.00	993.34	1		9	4	13	488.60	1,215.94
Alaska	11	5,156.00			1			10			1		1	2	3		
Arizona	7		328.00	530.79	6			1	.01	366.71	1	4	9	7	20	328.01	897.50
Dakota	4	6,000.00	100.00	50.00	4				70.00	670.33	3		1	7	8	170.00	720.33
Idaho	6	15,078.00	597.00	100.00	6				560.00	366.25	4		8	10	18	1,157.00	366.25
Indian Territory	11	3,200.00	466.00		9			2						9	9	466.00	
Montana	6	4,000.00			1	1	1	3	11,275.00	11,311.50	4	1		5	8	11,275.00	11,311.50
New Mexico	25	110,000.00	101.00	287.91	11		3	11	700.00	2,101.60	3		4	14	21	801.00	2,389.51
Utah	117	206,862.08	18,190.67	6,770.90	101			16	38,207.00	13,092.85	88	7	2	189	198	56,397.67	19,863.75
Washington	31	25,528.69	651.00	607.60	8	2		21	25.00	714.27	2	7	2	10	21	676.00	1,321.87
Wyoming									1,100.00	7,529.65	4	2	3	4	9	1,100.00	7,529.65
District of Columbia	2	105.00						2	640.41	10,305.74	1		1	1	2	640.41	10,305.74
Total	2,403	13,180,378.89	136,387.41	38,902.83	1,273	24	303	803	245,215.97	113,906.10	772	67	352	2,044	2,790	381,603.38	152,908.93

No. 7.—*Statistical summary of business arising from suits, etc., in which the United States . . . fiscal year ending*

	Judicial districts.	In suits brought during the fiscal year ending June 30, 1880.								
		Suits on Treasury transcripts.		Post-office suits.		Suits on custom-house bonds.		Suits for fines, penalties, and forfeitures under customs laws, etc.		Suits against collectors of customs, etc.
		No.	Amount.	No.	Amount.	No.	Amount.	No.	Amount.	No.
1	Alabama, northern	....	.....	15	$5,008.61	....	.....	....	.....	.....
2	Alabama, middle	....	.....	....	.....	....	.....	....	.....	.....
3	Alabama, southern	....	.....	....	.....	....	.....	....	.....	.....
4	Arkansas, eastern	....	.....	4	.....	....	.....	1	$100.00	.....
5	Arkansas, western	....	.....	2	.....	....	.....	....	.....	.....
6	California, northern	3	$7,731.58	1	.....	1	$51.24	14	1,000.00	5
7	California, southern	....	.....	2	.....	....	.....	2	.....	.....
8	Colorado	2	18,513.15	5	995.72	....	.....	....	.....	.....
9	Connecticut	....	.....	4	500.00	....	.....	1	50.00	.....
10	Delaware	....	.....	2	.....	....	.....	....	.....	.....
11	Florida, northern	....	.....	11	6,215.43	....	.....	....	.....	.....
12	Florida, southern	....	.....	4	226.28	....	.....	4	4,345.12	.....
13	Georgia, northern	1	578.72	....	.....	....	.....	....	.....	.....
14	Georgia, southern	1	1,350.94	17	7,592.19	....	.....	....	.....	.....
15	Illinois, northern	1	1,128.95	12	490.15	....	.....	6	.....	30
16	Illinois, southern	....	.....	23	666.10	....	.....	....	.....	.....
17	Indiana	....	.....	5	554.77	....	.....	....	.....	.....
18	Iowa, northern	....	.....	4	.....	....	.....	5	.....	.....
19	Iowa, southern	....	.....	4	.....	....	.....	....	.....	.....
20	Kansas	....	.....	8	3,076.86	....	.....	....	.....	.....
21	Kentucky	....	.....	3	2,597.63	....	.....	....	.....	.....
22	Louisiana, eastern	1	20,161.81	2	2,089.95	14	2,097.88	4	1,400.00	5
23	Louisiana, western	1	1,253.84	....	.....	....	.....	2	600.00	.....
24	Maine	....	.....	....	.....	....	.....	3	1,000.00	.....
25	Maryland	....	.....	7	1,329.86	....	.....	1	.....	1
26	Massachusetts	1	4,754.26	6	3,532.39	1	100.60	6	3,950.00	17
27	Michigan, eastern	....	.....	4	79.50	....	.....	15	1,700.00	3
28	Michigan, western	....	.....	8	855.22	....	.....	1	1,000.00	.....
29	Minnesota	1	376.00	19	14,343.09	....	.....	1	.....	.....
30	Mississippi, northern	....	.....	3	104.19	....	.....	....	.....	.....
31	Mississippi, southern	2	4,456.26	2	301.27	....	.....	....	.....	.....
32	Missouri, eastern	....	.....	6	.....	....	.....	2	200.00	.....
33	Missouri, western	....	.....	12	428.50	....	.....	....	.....	.....
34	Nebraska	....	.....	4	151.59	....	.....	....	.....	.....
35	Nevada	....	.....	1	124.82	....	.....	....	.....	.....
36	New Hampshire	....	.....	2	184.38	....	.....	....	.....	.....
37	New Jersey	....	.....	1	.....	....	.....	16	12,790.44	1
38	New York, northern	....	.....	12	800.00	....	.....	7	.....	.....
39	New York, southern	1	5,669.05	8	.....	6	5,672.69	68	3,524.56	1736
40	New York, eastern	....	.....	1	176.24	....	.....	1	1,000.00	.....
41	North Carolina, eastern	....	.....	....	.....	....	.....	....	.....	.....
42	North Carolina western	....	.....	5	1,680.38	....	.....	....	.....	.....
43	Ohio, northern	....	.....	13	1,226.69	1	69.40	5	900.00	.....
44	Ohio, southern	....	.....	5	1,184.50	....	.....	....	.....	3
45	Oregon	....	.....	4	.....	....	.....	9	1,000.00	.....
46	Pennsylvania, eastern	2	2,163.53	7	103.04	2	98.72	1	50.00	49
47	Pennsylvania, western	2	258.71	9	224.93	....	.....	....	.....	.....
48	Rhode Island	....	.....	4	.....	....	.....	2	.....	.....
49	South Carolina	....	.....	4	268.87	....	.....	....	.....	.....
50	Tennessee, eastern	....	.....	3	381.02	....	.....	....	.....	.....
51	Tennessee, middle	....	.....	1	.....	....	.....	....	.....	.....
52	Tennessee, western	....	.....	2	.....	....	.....	....	.....	.....
53	Texas, northern	....	.....	6	1,851.04	....	.....	....	.....	.....
54	Texas, eastern	1	1,416.52	3	724.52	....	.....	....	.....	.....
55	Texas, western	....	.....	6	1,031.41	1	52.38	4	.....	.....
56	Vermont	....	.....	2	.....	....	.....	....	.....	.....
57	Virginia, eastern	....	.....	5	786.70	....	.....	....	.....	.....
58	Virginia, western	1	165.05	2	1,182.02	....	.....	....	.....	.....
59	West Virginia	1	730.27	2	26.66	....	.....	....	.....	.....
60	Wisconsin, eastern	....	.....	1	.....	....	.....	....	.....	.....
61	Wisconsin, western	....	.....	4	3,572.19	....	.....	....	.....	.....
62	Alaska	....	.....	....	.....	....	.....	....	.....	.....
63	Arizona	....	.....	3	528.62	....	.....	2	.....	.....
64	Dakota	....	.....	8	6,251.23	....	.....	....	.....	.....
65	Idaho	2	1,187.54	....	.....	....	.....	....	.....	.....
66	Indian Territory	....	.....	....	.....	....	.....	....	.....	.....
67	Montana	....	.....	1	113.44	....	.....	....	.....	.....
68	New Mexico	1	6,331.14	....	.....	....	.....	....	.....	.....
69	Utah	....	.....	22	15,864.20	....	.....	....	.....	.....
70	Washington	1	8,087.33	....	.....	....	.....	17	15,848.09	.....
71	Wyoming	....	.....	1	188.71	....	.....	....	.....	.....
72	District of Columbia	3	10,200.57	12	3,554.40	....	.....	....	.....	.....
	Total	29	96,515.22	359	93,778.31	28	8,142.31	200	51,458.12	1849

or has an interest, under charge of the Solicitor of the Treasury, during the
9.

Amount.	In suits brought during the fiscal year ending June 30, 1889. Total amount reported sued for.	Total amount in judgment in favor of United States.	Total amount reported collected.	Decided for the United States.	Decided against the United States.	Settled, dismissed etc.	Remitted.	Pending.	Total number of suits commenced.	
$48,050.00	$53,658.61	$12,770.00	$331.15	89	.....	44	.....	178	311	1
8,600.00	8,600.00	1,710.00	.....	18	.....	13	.....	48	79	2
11,100.00	11,180.00	4,940.55	2,254.83	55	.....	28	.....	4	87	3
250.00	350.00	5,420.00	1,084.85	22	.....	1	.....	2	25	4
16,977.50	16,977.50	11,910.00	542.75	179	.....	9	.....	16	204	5
658,940.87	667,723.69	2,494.24	9,463.99	26	.....	2	.....	55	83	6
18,500.60	18,500.00	855.00	539.00	11	.....	1	.....	3	15	7
220,983.91	240,492.78	3,980.65	950.75	15	2	9	.....	40	66	8
450.00	1,000.00	1,880.00	2,729.74	12	.....	1	.....	1	14	9
.....	.....	525.00	.....	2	.....	.....	.....	.....	2	10
4,000.00	10,215.43	280.05	670.15	8	.....	.....	.....	13	21	11
1,000.00	5,571.40	1,162.29	1,672.29	4	.....	2	.....	4	10	12
25,000.00	25,578.72	3,888.75	120.43	23	.....	39	.....	51	113	13
.....	8,943.13	501.00	.....	6	.....	.....	.....	15	21	14
.....	1,628.10	1,283.00	1,223.17	16	22	2	.....	12	52	15
10,000.00	10,666.10	5,393.50	1,736.74	33	1	2	.....	2	38	16
.....	554.77	781.00	.....	17	.....	.....	.....	2	19	17
.....	.....	1,001.00	101.41	7	.....	2	.....	1	10	18
1,200.00	1,200.00	410.00	237.85	4	.....	1	.....	1	6	19
14,200.00	17,276.86	916.00	206.00	25	.....	1	.....	17	43	20
750.00	3,347.63	530.00	.....	6	.....	.....	.....	5	11	21
2,842.46	28,592.10	1,298.63	4,626.90	10	1	2	2	14	29	22
47,239.12	49,092.96	3,777.87	95.15	15	3	.....	1	15	34	23
825.00	1,825.00	1,242.00	395.00	10	.....	1	1	1	13	24
.....	1,329.86	1,563.00	201.90	17	.....	.....	.....	5	22	25
26,229.18	38,565.83	2,351.10	1,654.40	43	1	7	1	75	127	26
6,224.16	8,003.66	8,023.81	9,976.71	24	.....	2	.....	8	34	27
780.00	2,635.22	5,165.29	1,971.00	11	.....	.....	1	6	18	28
299,902.87	314,681.96	2,684.00	1,518.50	29	.....	2	.....	34	65	29
8,900.00	9,004.19	1,127.67	135.42	5	8	8	.....	13	34	30
8,660.00	13,417.53	6,885.90	1,481.67	15	.....	.....	.....	4	19	31
12,000.00	12,200.00	4,947.00	738.14	29	.....	1	.....	13	43	32
400.00	828.50	6,025.46	673.61	139	.....	15	.....	7	161	33
1,881.12	2,032.71	065.50	312.58	22	1	.....	.....	2	25	34
10,674,800.00	10,674,924.82	1,000,00	146.35	1	.....	1	.....	10	12	35
.....	184.38	.....	.....	.....	.....	.....	.....	2	2	36
5,200.00	18,990.44	3,100.00	1,520.25	10	.....	2	2	18	32	37
7,289.98	8,089.98	6,741.41	1,250.00	57	.....	.....	.....	6	63	38
146,795.81	161,662.11	2,871.13	10,392.08	83	1	75	1	1717	1877	39
66.70	1,242.94	7.00	.....	7	1	1	.....	2	11	40
500.00	500.00	300.00	14.10	2	.....	1	.....	.....	3	41
20,400.00	22,080.38	3,610.00	.....	19	.....	24	....	69	112	42
800.00	2,996.09	1,755.00	894.39	21	1	1	2	4	29	43
24,134.16	25,318.66	1,314.06	720.08	12	1	.....	.....	6	19	44
326,576.12	327,576.12	3,026.00	3,490.88	101	.....	1	1	19	122	45
4,724.96	7,140.25	4,243.78	289.52	29	1	2	.....	53	85	46
1,000.00	1,483.64	1,165.45	270.92	28	.....	1	.....	3	32	47
.....	.....	515.00	300.00	6	.....	.....	.....	.....	6	48
.....	268.87	1,418.03	216.20	15	.....	.....	.....	.....	15	49
3,000.00	3,381.02	425.00	86.40	6	.....	5	.....	9	20	50
16,400.00	16,400.00	3,200.00	202.25	9	.....	14	.....	23	46	51
7,725.00	47,725.00	275.00	116.15	5	.....	33	.....	21	59	52
26,985.00	28,836.04	3,684.52	2,507.60	14	1	15	.....	2	32	53
21,322.80	23,463.84	480.11	10.00	6	1	2	.....	9	18	54
23,700.00	24,783.79	2,290.00	82.38	8	.....	1	.....	11	20	55
300.00	300.00	375.00	349.50	4	.....	.....	.....	.....	4	56
4,422.80	5,209.50	4,287.90	3,907.39	9	2	.....	.....	.....	11	57
7,400.00	8,747.07	2,910.00	15.00	11	.....	17	.....	17	45	58
.....	756.93	775.00	1,152.02	10	.....	1	.....	1	12	59
22,416.00	22,416.00	1,256.00	753.00	19	.....	.....	.....	3	22	60
2,543.60	6,115.79	396.60	822.60	4	.....	.....	.....	6	10	61
5,156.00	5,156.00	.....	.....	1	.....	.....	.....	10	11	62
.....	528.62	378.00	580.79	8	.....	.....	.....	4	12	63
6,060.00	12,251.23	1,073.02	50.00	5	.....	.....	.....	7	12	64
15,078.00	16,265.54	597.00	100.00	6	.....	.....	.....	2	8	65
3,200.00	3,200.00	466.00	.....	9	.....	.....	.....	2	11	66
4,000.00	4,113.44	.....	.....	1	1	1	.....	4	7	67
110,000.00	116,331.14	101.00	287.91	11	.....	3	.....	12	26	68
206,862.08	222,726.28	18,259.88	6,896.06	102	.....	.....	.....	37	139	69
25,528.69	49,464.02	1,076.00	3,167.79	16	2	.....	.....	31	49	70
.....	188 71	.....	.....	.....	.....	.....	.....	1	1	71
105.00	13,859.97	3,554.40	.....	12	.....	.....	.....	5	17	72
13,180,378.89	13,430,272.85	185,316.55	87,786.69	1,614	51	396	12	2,793	4,866	

No. 7.—*Statistical summary of business arising from suits, etc.*—Continued.

Judicial districts.	In suits brought prior to the fiscal year.						Total judgments in favor of the United States during the year.	Total suits disposed of.	Total of judgments rendered in favor of the United States.	Total of collections from all sources.
	Amount of judgments reported in all old suits.	Amount collected in all old suits.	Decided for the United States.	Decided against the United States.	Settled, dismissed, etc.	Remitted.				
Alabama, northern	$8,950.47	$347.96	53	....	44	...	142	230	$21,720.47	$679.91
Alabama, middle	4,340.00	465.91	47	....	29	...	65	107	6,050.00	465.91
Alabama, southern	4,250.68	3,377.54	119	1	9	...	174	212	9,191.23	5,632.37
Arkansas, eastern	2,048.50	6,151.06	2	....	4	...	24	29	7,468.56	7,235.91
Arkansas, western	3,610.00	573.57	14	....	7	...	193	209	15,520.00	1,116.32
California, northern	55,945.78	10,461.55	13	5	6	...	39	52	58,439.97	19,925.54
California, southern	450.00	270.50	4	1	1	...	15	18	1,305.00	809.50
Colorado	9,029.58	11,480.59	32	3	24	...	47	85	13,010.23	12,431.34
Connecticut	.....	41.87	....	....	1	...	12	14	1,880.00	2,771.61
Delaware	.....	152.34	....	....	1	...	2	3	525.00	152.34
Florida, northern	.....	169.30	....	....	.....	...	8	8	280.05	839.45
Florida, southern	866.26	975.51	2	3	4	...	6	15	2,028.55	2,647.80
Georgia, northern	11,631.38	862.15	46	....	27	..	69	135	15,520.13	922.56
Georgia, southern	.....	1,124.32	....	3	2	...	6	11	501.00	1,134.32
Illinois, northern	400.00	3,888.18	17	48	5	...	33	110	1,683.00	5,107.35
Illinois, southern	1,777.06	4,964.77	9	....	1	...	42	46	7,170.56	6,701.51
Indiana	150.00	5,884.61	5	....	2	...	22	24	931.00	5,884.61
Iowa, northern	1,050.00	700.00	1	....	.....	...	8	10	2,051.00	801.41
Iowa, southern	.....	784.66	1	....	2	...	5	8	410.00	1,022.51
Kansas	2,939.07	1,630.65	22	9	13	...	47	70	3,855.07	1,830.65
Kentucky	4,148.40	3,170.83	8	....	4	...	14	18	4,678.40	3,170.83
Louisiana, eastern	533.75	3,453.75	3	....	7	...	13	25	1,832.38	8,080.65
Louisiana, western	976.85	15.00	8	8	5	...	23	40	4,754.72	110.15
Maine	656.67	4,731.06	3	....	4	...	13	19	1,898.67	5,126.06
Maryland	50.00	50.00	1	4	1	...	18	23	1,613.00	311.90
Massachusetts	5,286.36	4,003.01	17	4	22	...	60	95	7,637.46	5,657.41
Michigan, eastern	390.35	2,605.50	3	....	32	...	27	61	8,414.16	12,582.21
Michigan, western	8,658.82	2,238.54	13	....	1	1	24	27	13,824.11	4,209.54
Minnesota	12,879.74	1,554.04	24	2	16	...	53	73	15,563.74	3,072.54
Mississippi, northern	500.00	.....	2	2	5	...	7	30	1,627.67	135.42
Mississippi, southern	1,500.45	1,361.77	9	3	2	...	24	29	8,386.35	2,843.44
Missouri, eastern	109.00	5,238.11	2	1	4	...	31	37	5,056.00	5,971.25
Missouri, western	4,660.00	982.97	10	....	1	...	149	165	10,685.46	1,656.58
Nebraska	1,585.05	3,591.34	5	....	4	...	27	32	2,250.55	3,903.92
Nevada	50.00	306.89	1	....	.....	...	2	3	1,050.00	453.24
New Hampshire	.....	1,187.60	1	....	.....	...	1	1	.....	1,187.60
New Jersey	1,000.00	400.00	1	....	.....	4	11	19	4,100.00	1,920.25
New York, northern	12,306.80	325.00	7	....	2	...	64	66	19,048.21	1,575.00
New York, southern	3,529.78	18,241.59	19	6	595	...	102	780	6,400.91	28,633.67
New York, eastern	.....	2,272.00	1	....	32	...	8	42	7.00	2,272.00
North Carolina, eastern	471.67	56.00	1	....	7	...	3	11	771.67	70.10
North Carolina, western	11,520.00	76.76	57	1	16	...	76	117	15,130.00	76.76
Ohio, northern	200.00	398.11	4	....	2	...	25	31	1,955.00	1,292.50
Ohio, southern	988.87	803.44	4	3	2	1	16	23	2,302.93	1,523.52
Oregon	1,145.00	1,177.82	7	2	1	...	108	113	4,171.00	4,668.70
Pennsylvania, eastern	.....	2,707.29	6	9	18	...	35	65	4,243.78	2,996.81
Pennsylvania, western	20.00	10.87	2	....	1	...	30	32	1,185.45	281.79
Rhode Island	1,466.10	1,143.24	49	....	.....	...	55	55	1,981.10	1,443.24
South Carolina	1,158.68	1,008.12	3	...	1	...	18	19	2,576.71	1,224.32
Tennessee, eastern	10,325.00	252.45	15	....	10	...	21	36	10,750.00	338.85
Tennessee, middle	10,600.00	21,129.65	23	....	9	...	32	55	13,800.00	21,331.90
Tennessee, western	4,125.00	250.00	19	....	8	...	24	65	4,400.00	366.15
Texas, northern	450.00	551.75	3	2	9	...	17	44	4,134.52	3,059.35
Texas, eastern	892.70	53.74	5	2	4	...	11	20	1,872.81	63.74
Texas, western	1,907.00	1,000.00	2	1	8	...	10	15	4,197.00	1,082.38
Vermont	301.00	343.29	3	....	.....	...	7	7	676.00	692.79
Virginia, eastern	600.00	.....	2	....	.....	...	11	13	4,887.90	3,907.39
Virginia, western	800.00	.....	2	....	7	...	13	37	3,210.00	15.00
West Virginia	1,126.00	820.35	9	....	.....	...	19	20	1,901.00	1,972.37
Wisconsin, eastern	1,607.00	60.00	6	....	.....	...	25	25	2,963.00	813.00
Wisconsin, western	192.00	3,747.68	1	....	9	...	5	14	588.60	4,070.28
Alaska	700.00	1,914.10	2	....	1	...	3	4	700.00	1,914.10
Arizona	.01	448.21	1	4	10	...	9	23	378.01	1,029.00

No. 7.—*Statistical summary of business arising from suits, etc.*—Continued.

icial districts.	In suits brought prior to the fiscal year.						Total judgments, in favor of United States during the year.	Total suits disposed of.	Total of judgments rendered in favor of the United States.	Total of collections from all sources.
	Amount of judgments reported in all old suits.	Amount collected in all old suits.	Decided for the United States.	Decided against the United States.	Settled, dismissed, etc.	Remitted.				
.....	$70.00	$70.33	3	....	1	...	8	9	$1,143.02	$720.33
.....	560.00	266.25	4	....	8	...	10	18	1,157.00	366.25
erritory.....	.....	.....	...	...	.....	...	9	9	466.00	.....
.....	11,275.00	11,311.50	4	1	.....	...	5	8	11,275.00	11,311.50
xico.....	700.00	8,478.45	3	....	6	...	14	23	801.00	3,766.36
.....	38,207.00	13,099.85	89	7	2	...	191	200	56,466.88	19,995.91
;ton	25.00	3,666.18	2	7	2	...	18	29	1,101.00	6,833.97
g.....	1,100.00	7,529.65	4	2	3	...	4	9	1,100.00	7,529.65
of Columbia.....	640.41	12,518.31	1	....	5	...	13	18	4,194.81	12,518.31
tal	268,934.19	200,465.33	861	144	1,064	6	2,475	4,148	454,250.74	288,252.02

Statement showing the number of suits in which the United States was a party or had terest, commenced in each year from the establishment of the office of the Solicitor of reasury to June 30, 1888; also the aggregate amount claimed in said suits, together he aggregate sums collected in each of said years.

	No.	Amount claimed.	Amount collected.	Years.	No.	Amount claimed.	Amount collected.
..	403			1861.....	529	$44,279.16	$343,346.46
..	465			1862.....	1,072	1,463,229.55	461,438.87
..	615			1863.....	2,051	1,066,939.05	a2,997,709.45
..	457			1864.....	2,604	856,644.34	b7,985,532.91
..	447			1865.....	2,348	2,199,527.35	c9,558,621.42
..	282			1866.....	4,672	d8,066,629.65	e4,577,363.76
..	430			1867.....	3,873	f13,582,619.22	2,620,696.69
..	4,570			1868.....	2,004	10,970,147.59	644,517.42
..	1,089			1869.....	2,169	10,087,346.98	719,795.24
..	1,319	$25,494,359.00	$6,210,720.93	1870.....	1,868	5,367,007.44	477,025.37
..	804			1871.....	2,116	12,604,601.01	1,289,920.06
..	418			1872.....	1,854	8,567,185.11	1,000,422.41
..	614			1873.....	2,715	7,758,168.59	778,252.17
..	387			1874.....	2,986	10,117,653.50	1,113,112.39
..	421			1875.....	2,734	10,160,212.91	621,950.18
..	447			1876.....	2,339	7,001,358.77	868,198.41
..	364			1877.....	1,874	g14,073,031.17	2,052,973.58
..	250			1878.....	2,326	2,340,811.35	364,537.44
..	155			1879.....	2,060	3,755,831.39	608,632.02
..	102	277,310.26	4,766.04	1880.....	2,399	1,566,307.86	448,871.41
..	91	229,583.59	29,987.80	1881.....	2,716	1,366,758.73	875,564.48
..	352	131,307.87	48,002.52	1882.....	2,941	1,625,107.21	488,995.53
..	437	290,281.18	14,345.97	1883.....	2,703	1,947,573.13	1,324,529.92
..	84	211,193.16	28,112.41	1884.....	3,216	1,654,303.86	356,207.23
..	586	667,560.56	351,235.59	1885.....	2,903	3,235,889.47	932,682.14
..	918	705,745.68	436,722.17	1886.....	3,941	6,809,290.45	380,509.71
..	947	1,271,040.35	517,404.64	1887.....	3,575	3,594,259.85	603,627.47
..	520	1,130,979.78	748,532.07	1888.....	4,300	2,770,868.48	311,180.38
..	726	2,054,092.11	398,064.09	1889.....	4,866	13,400,272.85	288,252.02
..	744	916,492.84	1,246,805.71	Total..			
..	760	751,704.86	434,201.32		97,760	202,615,579.26	55,563,373.60

,276.01 of this collection were in prize and confiscation cases.
,412.60 of this collection were in prize and confiscation cases.
867.41 of this collection were in prize and confiscation cases.
,232.42 of this amount were in internal-revenue cases, since 1867 under control, by law, of the ioner of Internal Revenue.
,860.12 of this collection were in prize and confiscation cases.
806.44 of this amount were in internal-revenue cases, since 1867 under control, by law, of the loner of Internal Revenue.
5,600 of this amount involved in six suits against the Kansas Pacific Railroad Company to ioneys illegally obtained from the United States.

Statement of real property in charge of the Solicitor of the Treasury, acquired in the collection of debts due the United States, during the fiscal year ending June 30, 1889.

When acquired.	From whom acquired.	Description.	Where situated.
Dec. 10, 1888	George S. Leatherberry.	W. ½ of W. ½ sec. 6; N. ½ of N. ½ sec. 6; S. ½ of NE. ¼ sec. 7; SE. ¼ of NW. ¼ sec. 7; E. ½ of SW. ¼ sec. 8; SE. ¼ sec. 8; NE. ¼ of SE. ¼ sec. 12; W. ½ of W. ½ of NE. ¼ sec. 16; NW. ¼ sec. 16; NE. ¼ sec. 19; NE. ¼ sec. 20; NE. ¼ of NW. ¼ sec. 20; SW. ¼ of NW. ¼ sec. 20; all in T. 2 S., R. 8 W.	Jackson Co., Miss.
Dec. 10, 1888	.....do	NE ¼ sec. 35; NW. ¼ of SE. ¼ sec. 35; SE. ¼ of SE. ¼ sec. 35; NE. ¼ sec. 36; NW. ¼ sec. 36; all in T. 1 S., R. 9 W.	Perry Co., Miss.
Jan. 8, 1889	R. R. Butler.....	A tract of 400 acres of land in sixth civil district.	Johnson Co., Tenn.
Jan. 31, 1889	W. T. Paulk	Sec. 25 T. 3, R. 16; sec. 23 T. 3, R. 17; W. ½ of SE. ¼ sec. 29 T. 3, R. 17.	Covington Co., Ala.
Jan. 31, 1889	J. D. Musselwhite	E. ½ of sec. 13, T. 2, R. 16.....	Do.
Jan. 31, 1889	W. J. Smith.....	E. ½ of SE. ¼ sec. 21, T. 4, R. 17; SW. ¼ sec. 22, T. 4, R. 17.	Do.
Apr. 24, 1889	A. W. Nowlin.....	A lot on northwest corner of Ross avenue and Leonard street, in the city of Dallas.	Dallas Co., Tex.

Statement of real property in charge of the Solicitor of the Treasury, sold under the provisions of section 3749, Revised Statutes, during the fiscal year ending June 30, 1889.

When and from whom acquired.	Description.	When and to whom sold.	Amount sold for.
Feb. 7, 1867; Cornelius Curtis.	A tract of 437 acres of land in Harmony Township, Forest Co., Pa.	Aug. 4, 1888; Geo. W. King and J. C. Brady.	$1,000.00
Feb. 8, 1879; E. G. Hill.	The undivided half of N. W. ¼ of section 22, T. 39, R. 32, Morrison Co. Minn.	Aug. 4, 1888; T. M. Hill.	565.00
Aug. 31, 1880; F. M. Case.	The undivided one-third of E. ½ of NE. ¼ of section 14, T. 20, S., R. 65 W., and the undivided one-third of E. ½ of NW. ¼ of section 13, T. 20, S., R. 65 W., Pueblo Co., Colo.	Nov. 6, 1888; Bardon Sweet.	583.30
Aug. 31, 1880; F. M. Case.	The undivided one-third of NW. ¼ of NW. ¼ of section 13, T. 20, S., R. 65 W., in Pueblo Co., Colo.	Aug. 14, 1889; Thos. Fitzgerald.	94.00
Oct. 2, 1880; A. D. Thomas.	S. ½ SW. ¼ and NW. ¼ SW. ¼ sec. 3; E. ½ NE. ¼ and E. ½ SE. ¼ sec. 4; E. ½ NE. ¼ sec. 9; W. ½ NW. ¼ and S. E. ¼ NW. ¼ sec. 10; all in T. 6 N., R. 17 W., in Conway Co., Ark.	Nov. 24, 1888; W. H. Ward.	8,500.00
Feb. 8, 1881; S. B. Pool.	Three lots in the city of Calais, Me.	Mar. 2, 1889; A. E. Neill.	4,005.00
July 31, 1882; J. M. Collier.	Land lot 21, in 22d district, Cherokee Co., Ga.	Nov. 3, 1888; D. Collier.	100.00
	Total.....	.....	14,847.30

Statement of real property in charge of the Solicitor of the Treasury, the title to which ha been relinquished, as stated below.

When and from whom acquired.	Description.	By what authority interest of United States relinquished.
Sept. 5, 1878; S. De Vries.	NE. ¼ sec. 17, T. 27, R. 2 E.; E. ½ NW. ¼ sec. 17, T. 27, R. 2 E.; part W. ½ NW. ¼ sec. 17, T. 27, R. 2 E.; part SW. ¼ sec. 17, T. 27, R. 2 E.; E. ½ NW. ¼ sec. 20, T. 27 R. 2 E.; all in Woodford County, Ill.	Case compromised under section 3469, R.S., suit dismissed, and claim of title to the land abandoned.

Statement of suits in ejectment brought by the United States for possession of land by law in charge of the Solicitor of the Treasury.

Against whom, when, and in what court suit brought.	Description and location of property.	Remarks.
Charlie Lee *et al.*; Feb. 28, 1886; U. S. circuit court, middle district Alabama.	Lot and store-house No. 41 Market street, Montgomery, Ala.	Pending.
T. Gardner Foster *et al.*; Feb. 28, 1886; U. S. circuit court, middle district Alabama.	Lot and building No. 16 Perry street, Montgomery, Ala.	Do.
Eugene Beebe; Feb. 28, 1886; U. S. circuit court, middle district Alabama.	Lot and store-house No. 28 Market street, Montgomery, Ala.	Do.
W. L. Brock; Feb. 28, 1886; U. S. circuit court, middle district Alabama.	Lot and building on Perry street, Montgomery, Ala.	Do.
Josiah Morris *et al.*; Feb. 28, 1886; U. S. circuit court, middle district Alabama.	A tract of 80 acres of land, known as the Montgomery Race Track, Montgomery County, Ala.	Do.
J. H. Walton; July 30, 1886; U. S. circuit court, northern district Alabama.	280 acres of land in Tuscaloosa County, Ala.	Do.
S. C. Dunn; July 30, 1886; U. S. circuit court, northern district Alabama.	400 acres of land in Tuscaloosa County, Ala.	Do.
J. S. Swindle; July 30, 1886; U. S. circuit court, northern district Alabama.	529 acres of land in Tuscaloosa County, Ala.	Do.
Thomas C. Clements; June 1, 1887; U. S. circuit court, northern district, Alabama.	400 acres of land in Tuscaloosa County Ala.	Do.
Daniel Baltin; June 1, 1887; U. S. circuit court, northern district, Alabama.	160 acres of land in Tuscaloosa County, Ala.	Do.
W. T. Dunn; June 1, 1887; U. S. circuit court, northern district, Alabama.	640 acres of land in Tuscaloosa County, Ala.	Do.
B. B. Atkins *et al.*; Nov. 4, 1887; U. S. circuit court, western district, Texas.	1,476 acres of land in Live Oak and Bee Counties, Tex.	Do.
C. C. Haskell *et al.*; Feb. 14, 1888; U. S. district court, northern district, Texas.	4,605 acres of land in Eastland and Callahan Counties, Tex.	March 16, 1888, judgment in favor of United States.
Sam Sharp; Mar 13, 1888; U. S. district court, northern district, Mississippi.	160 acres of land in Alcorn County, Miss.	Nov. 1. 1888, verdict for defendant.
Robert Henderson; Mar. 13, 1888; U. S. district court, northern district, Mississippi.	Lot 12, block 49; Corinth, Alcorn County, Miss.	Nov. 1, 1888, judgment for United States.
Mrs. M. Strong; Mar. 13, 1888; U. S. district court, northern district, Mississippi.	Block 69, Corinth, Alcorn County, Miss.	Pending.
W. H. Russell, *et al.*; Aug. 25, 1888; U. S. circuit court, northern district, Texas.	1,920 acres of land in Brown County, Tex.	Nov. 27, 1888, judgment for United States.
Martha Insley *et al.*; July 22, 1885; U. S. circuit court, district of Kansas.	Lot 1 in block 104 in the city of Fort Scott, Kans.	Appealed by U. S. to U. S. Supreme Court. Decree of circuit court reversed and cause remanded. Pending.

EXHIBIT K.—*Report of the librarian.*

DEPARTMENT OF JUSTICE,
Washington, November 1, 1889.

SIR: I have the honor to present herewith the annual report for the library of the Department of Justice for the fiscal year ending June 30, 1889.

Previous to March, 1873, the United States Supreme Court Reports were distributed to the judiciary of the United States through the office of the Superintendent of Documents, under the direction of the Secretary of the Interior. By act of March 3, 1873, the Department of Justice was charged "with the distribution of the United States Statutes, United States Supreme Court Reports, and other judicial documents" to the judges of the United States Supreme Court; United States Court of Claims; the United States circuit and district courts; to the chief and associate justices of the several Territories, and to the officers of the Department of Justice.

By act of February 12, 1889, entitled "An act to amend section six hundred and eighty-three of the Revised Statutes, relating to the distribution of the Reports of the Supreme Court," "so much of section three hundred and eighty-six of the Revised Statutes as charges the Department of Justice with the distribution of the United States Supreme Court Reports" was repealed.

By this act the Secretary of the Interior is charged with the distribution of these reports, and also with supplying, in addition to those heretofore sent to the judges, one complete set of the United States Supreme Court Reports to each of the places where the circuit and district courts of the United States are regularly held. The transfer of distribution to the Department of the Interior facilitates the speedy and safe delivery of these volumes as issued; a matter of great importance.

If a similar law were passed to apply to the United States Statutes it would be a wise enactment. Frequent requests are made to this Department by the judicial officers of the United States for volumes 1 to 17, inclusive, of the United States Statutes. No provision having been made for supplying these volumes since they were currently issued—the last volume was issued in 1873—the requests can not be granted, and many, if not all, United States judicial offices established since 1873 are without these volumes.

The directions given by you in the latter part of last May for making and putting up book-cases on the library floor for the safe-keeping of the Government publications, which form a most valuable part of the library of this Department, were attended to promptly. The cases ordered are now all finished, and it gives me great pleasure to tell you that in a short time a large number of these volumes will be properly arranged in them. These books have been moved five times since I have had charge of the library, and since the first move (made against my earnest protest) until now there has been no suitable place provided for them. The present arrangement is convenient, and gives great satisfaction. But there is need for quite as many more cases as have been put up. Permit me, therefore, to ask that the cases needed be ordered soon. Additional shelf-room is also required in other parts of the library.

I desire this winter, if possible, to collate the statutes and session laws of the several States and Territories belonging to the library. Perhaps a special appropriation for binding these volumes will be neces-

ıs the binding of these books will require special care and at-
it would be well to have an arrangement made with the Gov-
t Printer whereby the binding can be placed in charge of an
)inder, who shall be responsible for the work and insure its being
7 done.

ectfully ask that you state to the Congress the pressing need of
eased appropriation for the purchase of books for this library.
)unt asked for, although larger than heretofore appropriated, is
te and only what is needed.

eports and works on jurisprudence	$2,500
ete the sets of the several State statutes	2,000
7 missing volumes of Government publications, becoming scarcer each	500

ıg the fiscal year July 1, 1888, to June 30, 1889, the purchase of
ras as follows:

	Volumes.
tates Supreme Court Reports	8
tates Circuit and District Court Reports	2
tates Court of Claims Reports	1
orts	99
Scotch, Irish, and Canadian reports	59
statutes	2
and session laws of the several States and Territories	377
tates digests	9
ests	13
ligests	2
jurisprudence	85
sedias (3)	7
ries (3)	3
	1
s and year-books, United States and foreign	3
	59
ies	5
odicals:	
ed States (4)	5
ish (5)	10
dian (1)	1
an (2)	2
ch (1)	1
r periodicals	4
tal number of volumes purchased	761

from Congress and Executive Departments	130
from the Territorial library of Arizona:	
s of Arizona, fifteenth legislative assembly, 1889, 2 bound copies	2
from the State library of California:	
ıtes and amendments to the codes of California, twenty-eighth session, 9	1
th annual report of the State mineralogist of California, for the year ling October 1, 1888	1
from the Territorial library of Idaho:	
ral Laws of the Territory of Idaho, fifteenth session, 1888–'89, 2 copies	2
from the State library of Illinois:	
ois Reports, vols. 121, 122, and 123	3
teenth annual report of the department of public works of the city Chicago, 1888	1
from the State library of Kansas:	
s of Kansas, 1887 and 1889	2
sas Reports, vols. 38 and 39	2
from the State library of Louisiana:	
of Louisiana, session of 1888	1
te journal, session of 1888	1
se journal, session of 1888	1

	Volumes.
Received from the State library of Maryland:	
Laws of Maryland, session of 1888	1
Public General Laws of Maryland, vols. 1 and 2	2
Public Local Laws of Maryland, vols. 1 and 2	2
Received from the State library of Massachusetts:	
Acts and Resolves of Massachusetts, 1888	1
Received from the State library of Minnesota:	
Biennial report of the attorney-general of Minnesota for the two years ending July 31, 1888	1
Minnesota Reports, vols. 37 and 38	2
The Legislative Manual of the State of Minnesota, 1888	1
Received from the Territorial library of New Mexico:	
New Mexico Reports, vol. 2, 1880–1883	1
Received from the State library of New York:	
Laws of New York, one hundred and eleventh session, 1888	1
Received from the State library of South Carolina:	
South Carolina Reports, vols. 27 and 28	2
Acts and Joint Resolutions of South Carolina, regular session, 1888	1
Received from the State library of Texas:	
Texas Reports, vols. 69 and 70	2
Texas Court of Appeals Report, vol. 26	1
Received from the Territorial library of Utah:	
Compiled laws of Utah, vols. 1 and 2, 1888	2
Received from the Territorial library of Washington:	
Index to code and laws of Washington Territory, 1883-1888	1
Washington Territory Reports, vol. 3, 1887 and 1888	1
Total	39
Books from various other sources	9
Pamphlets from various sources	30

SUMMARY.

Books received from Congress and Executive Departments	130
Books purchased	761
Books received otherwise than by purchase	50
Pamphlets	30
Total	971

Received from Department of State.	Copies received.	Copies distributed.
United States Statutes:		
First session, Fiftieth Congress, 1887-'88	525	525
Second session, Fiftieth Congress, 1888-'89	525	525
Revised Statutes of the United States, second edition, 1878	100	50
Revised Statutes relating to the District of Columbia, post-roads, public treaties		5
Supplement to the Revised Statutes of the United States, vol. 1, 1874-'81	50	50
United States Statutes at Large:		
Volume 18		15
Volume 19		15
Volume 20		15
Volume 21		15
Volume 22		15
Volume 23		15
Volume 24		10
Volume 25	425	425

Received from the Secretary of War:
War of the Rebellion, official records of the Union and Confederate Armies:

	Copies.
Series 1, volume 22, part 1	50
Series 1, volume 22, part 2	50
Series 1, volume 23, part 1	50
Series 1, volume 23, part 2	50

Distributed as directed, the reserve number being retained.

Minnesota	Minnesota State prison	Stillwater	H. G. Stordock	Minnesota	4	1	5	3	2	2	....	1	....	....
Missouri, western	Missouri State penitentiary	Jefferson City	J. L. Norrison	Missouri, eastern and western.	16	8	24	14	10	14	....	....	....	....
Montana	United States penitentiary	Deer Lodge	G. W. Irvin	Montana	12	1	13	10	3	8	....	1	1	....
Nevada	Nevada State prison	Carson City	T. J. McCullough	Nevada	7	1	8	4	4	4	....	....	....	....
New Hampshire	New Hampshire State prison.	Concord	G. W. Colbath	New Hampshire	.....	1	1	.....	1	.....	....	....	....	....
New Jersey	New Jersey State prison	Trenton	J. H. Patterson	New Jersey	20	7	27	10	17	10	....	....	....	....
	Hudson Co. penitentiary	Snake Hill	John Grimes	do	.....	3	3	1	2	1	....	....	....	....
	Essex County penitentiary	Caldwell	T. J. Speer	do	2	.....	2	1	1	1	....	....	....	....
New Mexico	New Mexico penitentiary	Santa Fé	H. C. Burnett	New Mexico	9	5	14	6	8	5	....	....	....	1
New York, northern	Albany County penitentiary.	Albany	James McIntyre	District of Columbia: Virginia, eastern and western; New York, northern.	274	128	402	172	230	155	10	7	....	....
	State prison	Auburn	C. F. Durston	New York	15	.....	15	8	7	6	....	2	....	....
	Erie County penitentiary	Buffalo	A. H. Neal	do	68	40	108	28	80	26	....	1	....	1
	N. Y. State reformatory	Elmira	Z. R. Brockway	New York; Tennessee, eastern and middle; Arkansas, western; and Georgia, southern.	22	31	53	10	43	9	1	....	....	....
	Monroe Co. penitentiary	Rochester	C. A. Webster	New York	1	1	2	.....	2	.....	....	....	....	....
New York, eastern	Kings County penitentiary	Brooklyn	Patrick Hayes	do	3	2	5	.....	5	.....	....	....	....	....
Ohio, northern	Cleveland workhouse	Cleveland	W. D. Patterson	Ohio, northern	2	5	7	4	3	3	....	1	....	....
Ohio, southern	Ohio penitentiary	Columbus	E. G. Coffin	Alabama, Arizona, Arkansas, Florida, Georgia, Kentucky, Louisiana, Massachusetts, Mississippi, New Mexico, North Carolina, Ohio, South Carolina, Tennessee, Texas.	65	110	175	49	126	29	6	5	9	....
Ohio	Boys' industrial school	Lancaster	D. M. Barrett	Ohio, southern	1	2	3	.....	3	.....	....	....	....	....
Oregon	Oregon State prison	Salem	G. S. Downing	Oregon	18	9	27	15	12	15	....	....	....	....
Pennsylvania, eastern	Eastern penitentiary	Philadelphia	M. J. Cassidy	Pennsylvania, eastern	25	22	47	15	32	15	....	....	....	....
Pennsylvania, western	Western penitentiary	Pittsburgh	E. S. Wright	Pennsylvania, western	32	28	60	19	41	18	....	1	....	....
	Pennsylvania reform school	Morganza	.....	.....	1	.....	1	.....	1	.....	....	....	....	....
Rhode Island	Rhode Island State prison	Howard	Nelson Viall	Rhode Island	5	6	11	2	9	2	....	....	....	....
South Carolina	South Carolina penitentiary	Columbia	T. J. Lipscomb	South Carolina	5	4	9	5	4	5	....	....	....	....
Utah	Utah penitentiary	Salt Lake City	E. H. Parsons	Utah	81	280	361	291	70	280	....	5	6	....
Vermont	House of correction	Rutland	G. N. Earyres	Vermont	3	2	5	4	1	4	....	....	....	....
West Virginia	West Virginia penitentiary	Moundsville	T. J. Johnson	West Virginia	7	12	19	4	15	4	....	....	....	....
Wisconsin, eastern	Wisconsin State prison	Waupun	G. W. Carter	Wisconsin, western	5	2	7	3	4	2	....	1	....	....
Wisconsin, eastern	House of correction	Milwaukee	M. J. McLaughlin	Wisconsin, eastern and western.	3	11	14	11	3	11	....	....	....	....
Wyoming	United States penitentiary	Laramie City	T. J. Carr	Colorado	11	4	15	6	9	6	....	..	....	....
Washington	United States penitentiary	McNeil's Island	S. F. Coombs	Washington	49	48	97	53	44	51	....	2	....	....
	Total				1,224	1,083	2,307	1,055	1,252	944	38	49	19	5

* No report.

EXHIBIT L.—*Detailed statistics of the institutions where United States prisoners were confined during the year ending June* 30, 1889.

District.	Prison.	Location.	Name of warden or superintendent.	Districts from which prisoners have been received during year.	In prison July 1, 1888.	Received from July 1, 1888, to June 30, 1889.	Total in prison during the year.	Discharged from July 1, 1888, to June 30, 1889.	Remaining in prison July 1, 1889.	Discharged.				
										By expiration of sentence.	Died.	Pardoned.	By habeas corpus.	Transfer to insane asylum.
Arizona*	Arizona Territorial penitentiary.	Santa Fé												
Arkansas, eastern	Arkansas State penitentiary.	Little Rock	A. N. Johnson	Arkansas, eastern and western.	121	132	253	100	153	88	10	2		
California, northern	California State penitentiary.	San Quentin	John McComb	California, northern and southern; Alaska and Arizona.	16	16	32	5	27	3	1	1		
	State prison of California	Folsom	Charles Aull	California, southern	3	1	4	1	3	1				
	House of correction	San Francisco	John Foley	California, northern		5	5	3	2	3				
Connecticut	Connecticut State prison	Wethersfield	S. E. Chamberlain	Connecticut	5		5	2	3			2		
Dakota	United States penitentiary	Sioux Falls	D. W. Maratta	Nebraska, Idaho, and Dakota.	17	13	30	15	15	10		5		
District of Columbia	Reform school	Washington	G. A. Shallenberger	District of Columbia	16	9	25	2	23	2				
Idaho	United States penitentiary	Boisé City		Idaho	3	8	11	9	2	7				2
Illinois, northern	Illinois State prison	Joliet	A. W. Berggren	Illinois, northern	12	13	25	8	17	5		3		
Illinois, northern	Southern Illinois State prison	Menard	E. J. Murphy	Illinois, southern	101	14	115	65	50	60	1	3	1	
Illinois, southern	House of correction	Chicago	C. E. Felton	Illinois, northern	1		1	1		1				
Indiana	Indiana State prison, north	Michigan City	J. Murdock	Indiana and Kansas	26	13	39	19	20	18	1			
	Indiana State prison, south	Jeffersonville	J. B. Patten	Indiana	1		1		1					
	Reform school for women and girls.	Indianapolis	Sarah F. Keely	Indiana		2	2	1	1	1				
Iowa, northern	Iowa State prison	Anamosa	M. Barr	Iowa, northern and southern.	2	8	10	5	5	5				
Kansas	Kansas State prison	Lansing	G. H. Case	Kansas	20	28	48	17	31	11	4	1		1
Kentucky*	Industrial school of reform.	Louisville												
Maine	Maine State prison	Thomaston	S. H. Allen	Maine	5	3	8	1	7	1				
	State reform school	Cape Elizabeth	J. R. Farrington	do	1	1	2		2					
Maryland	Maryland penitentiary	Baltimore	J. F. Weyler	Maryland	10	7	17	2	15	1			1	
	House of reformation for colored boys.	Cheltenham	E. A. Rhodes	Alabama, southern, and North Carolina, eastern.	8	2	10	3	7	2	1			
Massachusetts	Massachusetts State prison	Charlestown	E. J. Russell	Massachusetts	10	2	12	4	8	4				
	Massachusetts reformatory	Concord	Gardner Tufts	do	2	2	4	2	2	2				
Michigan, eastern	House of correction	Detroit	Joseph Nicholson	Michigan, eastern and western.	78	30	108	42	66	33	3	5	1	

Montana	United States penitentiary *												
Nevada	Nevada State prison	Carson City	T. J. McCullough	Nevada									
New Hampshire	New Hampshire State prison.	Concord	G. W. Colbath	New Hampshire		1	1		1				
New Jersey	New Jersey State prison	Trenton	J. H. Patterson	New Jersey	20	7	27	10	17	10			
	Hudson Co. penitentiary	Snake Hill	John Grimes	do		3	3	1	2	1			
	Essex County penitentiary	Caldwell	T. J. Speer	do	2		2	1	1	1			
New Mexico	New Mexico penitentiary	Santa Fé	H. C. Burnett	New Mexico	9	5	14	6	8	5			1
New York, northern	Albany County penitentiary.	Albany	James McIntyre	District of Columbia: Virginia, eastern and western; New York, northern.	274	128	402	172	230	155	10	7	
	State prison	Auburn	C. F. Durston	New York	15		15	8	7	6		2	
	Erie County penitentiary	Buffalo	A. H. Neal	do	68	40	108	28	80	26		1	1
	N. Y. State reformatory	Elmira	Z. R. Brockway	New York; Tennessee, eastern and middle; Arkansas, western; and Georgia, southern.	22	31	53	10	43	9	1		
	Monroe Co. penitentiary	Rochester	C. A. Webster	New York	1	1	2		2				
New York, eastern	Kings County penitentiary	Brooklyn	Patrick Hayes	do	3	2	5		5				
Ohio, northern	Cleveland workhouse	Cleveland	W. D. Patterson	Ohio, northern	2	5	7	4	3	3		1	
Ohio, southern	Ohio penitentiary	Columbus	E. G. Coffin	Alabama, Arizona, Arkansas, Florida, Georgia, Kentucky, Louisiana, Massachusetts, Mississippi, New Mexico, North Carolina, Ohio, South Carolina, Tennessee, Texas.	65	110	175	49	126	29	6	5	9
Ohio	Boys' industrial school	Lancaster	D. M. Barrett	Ohio, southern	1	2	3		3				
Oregon	Oregon State prison	Salem	G. S. Downing	Oregon	18	9	27	15	12	15			
Pennsylvania, eastern	Eastern penitentiary	Philadelphia	M. J. Cassidy	Pennsylvania, eastern	25	22	47	15	32	15			
Pennsylvania, western	Western penitentiary	Pittsburgh	E. S. Wright	Pennsylvania, western	32	28	60	19	41	18		1	
	Pennsylvania reform school	Morganza			1		1		1				
Rhode Island	Rhode Island State prison	Howard	Nelson Viall	Rhode Island	5	6	11	2	9	2			
South Carolina	South Carolina penitentiary	Columbia	T. J. Lipscomb	South Carolina	5	4	9	5	4	5			
Utah	Utah penitentiary	Salt Lake City	E. H. Parsons	Utah	81	280	361	291	70	280		5	6
Vermont	House of correction	Rutland	G. N. Earyres	Vermont	3	2	5	4	1	4			
West Virginia	West Virginia penitentiary	Moundsville	T. J. Johnson	West Virginia	7	12	19	4	15	4			
Wisconsin, eastern	Wisconsin State prison	Waupun	G. W. Carter	Wisconsin, western	5	2	7	3	4	2		1	
Wisconsin, eastern	House of correction	Milwaukee	M. J. McLaughlin	Wisconsin, eastern and western.	3	11	14	11	3	11			
Wyoming	United States penitentiary	Laramie City	T. J. Carr	Colorado	11	4	15	6	9	6			
Washington	United States penitentiary	McNeil's Island	S. F. Coombs	Washington	49	48	97	53	44	51		2	
	Total				1,224	1,083	2,307	1,055	1,252	944	38	49	19	5

* No report.

EXHIBIT L.—*Detailed statistics of the institutions where United States prisoners were confined, etc.*—Continued.

District.	Prison.	Of those received during the year ending June 30, 1889.																
		Crimes or offenses.				Nativity.		Sex.		Habit of life.		Color.				Education.		
		Committed for violation of revenue laws.	Committed for counterfeiting.	Committed for violation of postal laws.	Committed for other offenses.	Born in United States.	Foreign born.	Males.	Females.	Claim to be temperate.	Admitted to be intemperate.	White.	Black.	Indian.	Chinese.	Could read and write.	Could read only.	Could neither read nor write.
Arizona*	Arizona Territorial penitentiary	.....	.....	.....	.....	.....	.....	.....	.....	.....	.....	.....	.....	.....	.....	.....	.....	.....
Arkansas, eastern	Arkansas State penitentiary	21	1	2	108	129	3	131	1	51	81	78	26	28	.....	65	11	56
California, northern	California State penitentiary	1	4	1	10	11	5	16	.....	2	14	7	3	6	.....	11	.....	5
	State prison of California	.....	.....	1	.....	1	.....	1	.....	.....	1	1	.....	.....	.....	1	.....	.....
	House of correction	.....	.....	.....	5	1	4	5	.....	5	.....	4	.....	.....	1	3	.....	2
Connecticut	Connecticut State prison	.....	.....	.....	.....	.....	.....	.....	.....	.....	.....	.....	.....	.....	.....	.....	.....	.....
Dakota	United States penitentiary	3	.....	4	6	6	7	13	.....	13	.....	12	1	.....	.....	12	.....	1
District of Columbia	Reform school	.....	.....	.....	9	9	.....	9	.....	9	.....	.....	9	.....	.....	5	1	3
Idaho	United States penitentiary	.....	.....	1	7	4	4	8	.....	6	2	6	.....	.....	.....	7	.....	1
Illinois, northern	Illinois State prison	.....	6	3	4	12	1	13	.....	11	2	12	1	.....	.....	13	.....	.....
Illinois, southern	Southern Illinois State prison	.....	6	3	5	14	.....	14	.....	2	12	14	.....	.....	.....	11	2	1
Illinois, northern	House of correction	.....	.....	.....	.....	.....	.....	.....	.....	.....	.....	.....	.....	.....	.....	.....	.....	.....
Indiana	Indiana State prison, north	.....	7	6	.....	12	1	13	.....	6	7	11	2	.....	.....	13	.....	.....
	Indiana State prison, south	.....	.....	.....	.....	.....	.....	.....	.....	.....	.....	.....	.....	.....	.....	.....	.....	.....
	Reform school for women and girls.	.....	1	1	.....	1	1	.....	2	2	.....	2	.....	.....	.....	2	.....	.....
Iowa, northern	Iowa State prison	.....	4	3	1	8	.....	8	.....	6	2	8	.....	.....	.....	8	.....	.....
Kansas	Kansas State prison	4	.....	.....	24	26	2	27	1	20	8	13	6	9	.....	28	.....	2
Kentucky*	Industrial school of reform	.....	.....	.....	.....	.....	.....	.....	.....	.....	.....	.....	.....	.....	.....	.....	.....	.....
Maine	Maine State prison	.....	1	1	1	1	2	3	.....	.....	3	3	.....	.....	.....	3	.....	.....
	State reform school	.....	.....	1	.....	1	.....	1	.....	1	.....	1	.....	.....	.....	1	.....	.....
Maryland	Maryland penitentiary	.....	.....	.....	7	5	2	7	.....	3	4	5	2	.....	.....	6	.....	1
Maryland	House of reformation for colored boys.	.....	.....	2	.....	2	.....	2	.....	2	.....	.....	2	.....	.....	.....	1	1
Massachusetts	Massachusetts State prison	.....	.....	.....	2	2	.....	2	.....	2	.....	2	.....	.....	.....	2	.....	.....
	Massachusetts reformatory	.....	.....	2	.....	2	.....	2	.....	2	.....	2	.....	.....	.....	2	.....	.....
Michigan, eastern	House of correction	1	11	5	13	22	8	29	1	13	17	28	2	.....	.....	30	.....	.....

New Hampshire	New Hampshire State prison			1			1	1										
New Jersey	New Jersey State prison		5		2	4	3	7		7		6	1			4		
	Hudson County penitentiary		2		1	2	1	3		1	2	3				3		
	Essex County penitentiary																	
New Mexico	New Mexico penitentiary		1	2	2	5		5		4	1	4		1		3		2
New York, northern	Albany County penitentiary	1	5	2	120	118	10	121	7	51	77	27	100		1	79	3	46
	Erie County penitentiary	4	23	7	6	23	17	40		36	4	40				40		
	New York State reformatory		5	18	8	28	3	31		20	11	29	1	1		20	9	2
	Monroe County penitentiary		1				1		1	1		1				1		
New York, eastern	Kings County penitentiary		2				2	2		2		2						2
Ohio, northern	Cleveland work-house		2	3		4	1	5		5		4	1			4		1
Ohio, southern	Ohio penitentiary	6	19	25	60	104	6	106	4	24	86	72	26	12		70	8	32
Ohio	Boy's industrial school			2		2		2		2		2				2		
Oregon	Ohio State prison	4		3	2	8	1	9		1	8	4		5		6		3
Pennsylvania, eastern	Eastern penitentiary		10	6	6	14	8	22		15	7	21	1			19		3
Pennsylvania, western	Western penitentiary		19		9	23	5	28		6	22	28				25	3	
	Pennsylvania reform school																	
Rhode Island	Rhode Island State prison		2	4		5	1	6		6		6				6		
South Carolina	South Carolina penitentiary			1	3	4		4		4			4			1	1	2
Utah	Utah penitentiary				280	78	202	279	1	235	45	280				271	3	6
Vermont	House of correction	2				1	1	2			2	2				2		
West Virginia	West Virginia penitentiary	3		6	3	12		11	1	12		12				4	4	4
Wisconsin, eastern	Wisconsin State prison		1		1	2		2		1	1	2				1		1
Wisconsin	House of correction				11	10	1	11		9	2	9		2		8		3
Wyoming	United States penitentiary			4		3	1	4		4		4				4		
Washington	United States penitentiary				48	23	25	48		40	8	32	1	2	13	38		10
	Total	29	146	119	657	621	330	951	132	601	350	734	163	39	15	778	35	138

* No report.

EXHIBIT L.—*Detailed statistics of the institutions where United States prisoners were confined, etc.*—Continued.

District.	Prison.	Of those received during the year ending June 30, 1889.									Of those in prison June 30, 1889.						
		Social relations.		Previous conviction.									Working.				
		Married.	Single.	In prison for first time.	Having heretofore served sentence.	Under 20 years of age.	Between 20 and 30 years of age.	Between 30 and 40 years of age.	Between 40 and 50 years of age.	Over 50 years of age.	Idle.	Disabled or sick.	On contract.	On piece price.	On State account.	On prison duties.	Total.
Arizona*	Arizona Territorial penitentiary																
Arkansas, eastern	Arkansas State penitentiary	48	84	107	25	29	70	22	8	8		5	128			20	153
California, northern	California State penitentiary	6	10	14	2		6	7	3						18	9	27
	State prison of California	1		1			1								3		3
	House of correction		5	5		2		1	1	1						2	2
Connecticut	Connecticut State prison															3	3
Dakota	United States penitentiary	7	6	13		1	4	6	1	1	10					5	15
District of Columbia	Reform school		9	6	3	9					14					9	23
Idaho	United States penitentiary	8		8			2			6						2	2
Illinois, northern	Illinois State prison	7	6	10	3	1	3	6	2	1			1			16	17
Illinois, southern	Southern Illinois State prison	4	10	14		1	6	3	3	1			11		39		50
Illinois, northern	House of correction																
Indiana	Indiana State prison, northern	8	5	9	4	2	3	4	2	2		1	4			15	20
	Indiana State prison, southern															1	1
	Reform school for women and girls.	1	1	2			2									1	1
Iowa, northern	Iowa State prison	5	3	7	1	1	4	1	1	1					5		5
Kansas	Kansas State prison	8	20	26	2	6	12	7	2	1		1			25	5	31
Kentucky*	Industrial school of reform																
Maine	Maine State prison	1	2	1	2	1		1		1					4	3	7
	State reform school		1	1		1								1		1	2
Maryland	Maryland penitentiary	4	3	3	4		3	1		3	1		1		13		15
	House of reformation for colored boys.		2	2		2										7	7
Massachusetts	Massachusetts State prison	2		1	1			1		1					6	2	8
	Massachusetts reformatory		2	2		1	1									2	2
Michigan, eastern	House of correction	9	21	27	3	2	8	7	12	1					61	5	66

Minnesota, northern	Minnesota State prison		1	1		1						1			1		2
Missouri, western	Missouri State penitentiary	3	5	5	3		2	4	2							10	10
Montana	United States penitentiary	1		1			1				1					2	2
Nevada	Nevada State prison	1		1			1								4		4
New Hampshire	New Hampshire State prison		1	1		1							1				1
New Jersey	New Jersey State prison	3	4	7			2	1	2	2	5	1		6		5	17
	Hudson County penitentiary	2	1	3			2		1							2	2
	Essex County penitentiary															1	1
New Mexico	New Mexico penitentiary		5	5			3		1	1		1				7	8
New York, northern	Albany County penitentiary	42	80	106	22	45	53	17	7	6	112	11			92	15	230
	State prison										6					1	7
	Erie County penitentiary	36	4	37	3		8	20	7	5	1	3			75	1	80
	New York State reformatory	2	29	23	8	14	16	1			33					10	43
	Monroe County penitentiary	1		1			1									2	2
New York, eastern	Kings County penitentiary	1	1	2			1	1								5	5
Ohio, northern	Cleveland work-house		5	5		2	2	1							3		3
Ohio, southern	Ohio penitentiary	53	57	105	5	14	55	16	13	12	10	1		75	10	30	126
Ohio	Boys' industrial school		2	2		2									3		3
Oregon	Oregon State prison	4	5	9			3	5		1		1	1		7	3	12
Pennsylvania, eastern	Eastern penitentiary	12	10	19	3		11	5	4	2	8	3			21		32
Pennsylvania, western	Western penitentiary	16	12	23	5	2	10	5	4	7	10	1			24	6	41
	Pennsylvania reform school															1	1
Rhode Island	Rhode Island State prison	6		6			5		1		1					3	9
South Carolina	South Carolina penitentiary	3	1	4			2	2								4	4
Utah	Utah penitentiary	274	6	272	8	2	9	40	79	150		2				68	70
Vermont	House of correction	2		2				1		1						1	1
West Virginia	West Virginia penitentiary	6	6	12		2	9	1					1			14	15
Wisconsin, eastern	Wisconsin State prison	1	1	2			1			1			2			2	4
Wisconsin	House of correction	5	6	9	2		2	5	2	2						3	3
Wyoming	United States penitentiary		4	4			4								7	2	9
Washington	do	2	46	40	8	3	17	15	7	6	8	2				34	44
	Total	547	464	859	92	118	275	185	157	216	220	84	150	82	421	345	1252

*No report.

EXHIBIT M.—*Report of the Board of Trustees of the Reform School.*

REFORM SCHOOL OF THE DISTRICT OF COLUMBIA,
Washington, D. C., October 1, 1889.

SIR: In compliance with law, I respectfully submit herewith the twentieth annual report of the trustees of the Reform School of the District of Columbia.

The school was organized nearly twenty-one years ago, and from that time down to and including the 30th of June last there have been received 1,386 boys. On the first day of the last fiscal year there were 155 boys in the school. During the fiscal year ending June 30, 1889, 84 boys were received, making during the year a total of 239 boys.

Of boys received during the year, 9 were committed by the supreme court of the District of Columbia, 49 by the police court, and 26 by the president of the board of trustees. Eighty were received upon first commitment and 4 upon second commitment. The average age of the boys was twelve and a half years. The oldest boy received was sixteen years of age, the youngest eight years.

For further detailed information respecting the boys, your attention is respectfully invited to the report of the superintendent herewith submitted.

No deaths have occurred at the school for over two years and from the time the school was organized until now but nine deaths have occurred out of a population of 1,386, covering a period of nearly twenty-one years. This of itself speaks well for the care and attention the boys receive. They have—though plain—the very best food in abundance, and the best medical treatment when sick. Fortunately, but few cases of sickness occur, and generally when they do occur they are of a mild type and readily yield to treatment.

As to the health and sanitary condition of the school, your attention is respectfully invited to the report of the physician, Dr. Wells.

Forty-nine boys were discharged during the year. It is a rule of the board of trustees not to discharge a boy unless he has a proper home to return to, and where a boy has earned his discharge by his good conduct, if he has no suitable home, every exertion is made by the superintendent and the trustees to find a home and employment. As a rule, boys on leaving the school readily find employment and conduct themselves well.

Many instances have been brought to the attention of the board of discharged boys holding places of trust and responsibility in this and other cities, and, with very few exceptions, whenever they hear of discharged boys they learn that they are doing well. The training that they receive at the school fits them for the battle of life. They are sent out well-equipped to make their way in the world and to become useful and honorable citizens, and it is the pride and pleasure of the trustees to point to the honorable and creditable career of a large majority of the boys who have been under their control and management.

Some other industries should be introduced in the school. For many years past the trustees contracted with a firm in another city for caning seats of chairs; this gave occupation to from thirty to fifty boys, but the contract expired some months ago and could not be renewed. An appropriation of $3,000 is asked for the purchase of necessary machinery, etc.

A committee of the trustees have recently inspected several of the larger institutions, with a view of ascertaining the best means of not

ving the boys employment, but of teaching them an occupation will be useful to them in their future lives. In their report they mend that as little machinery as possible be used, and that no be taught which will require the use of it to any great extent; reason that when the inmates leave the school they must to a extent depend upon their own hands and they should be taught k without the aid of machinery.

y recommend that the shoe-shop and tailor-shop be largely in-d, and that all the shoes be made required at the school, and all othing be made; and, if possible, work be obtained for the tailor-from clothing establishments in this and other cities.

y further recommend that the trades of brick-laying, plastering, arpentering be taught, and that skilled mechanics be employed ch the boys these trades.

ter the boys become proficient in these trades they can do a amount of work on the premises which now has to be done by s at a considerable expense to the school, and by employing the in this way the expense will be saved.

e house of refuge in Philadelphia is one of the oldest institutions e country and is a walled institution, but the managers have come e conclusion that open institutions, similar to ours, are better in way, and have purchased a farm of about 400 acres near that city, cost of over $50,000, and there has been appropriated the sum of ,000 for the erection of buildings; thus showing the importance that tate of Pennsylvania places upon the necessity of the reformation ducation of this class of boys.

ur attention is respectfully invited to the report of the committee, h is hereto appended.

timates of appropriations for expenses of the school for the next have been submitted to you and to the honorable Commissioners e District of Columbia, as follows:

laries:	
ne superintendent	$1,500
ne assistant superintendent	900
x teachers and assistant teachers	4,050
ne matron of school	600
hree matrons of families, each $180	540
hree foremen of workshops	1,980
ne farmer	480
ne engineer	396
ne assistant engineer	300
ne baker	360
ne cook, one shoemaker, and one tailor, $300 each	900
wo dining-room servants, one seamstress, and one chambermaid, $144 each	576
ne laundress	180
ne florist	360
atchmen, not exceeding seven in number	1,620
ecretary and treasurer, board of trustees	600
In all	15,342

r support of inmates, including groceries, flour, feed, meats, dry s, leather and shoes, gas, fuel, hardware, tableware, furniture, implements and seeds, harness, and repairs to same, fertilizers, s, stationery, plumbing, painting and glazing, medicines, medical dance, stock, fencing, repairs to buildings, and other necessary s, including compensation, not exceeding $900, for additional labor rvices, and for transportation and other necessary expenses inci-

dent to securing suitable homes for discharged boys, not exceeding $500, all under the control of the Commissioners, $26,000.

For buildings and improvements:

Permanent improvement of roadways and approaches, including grading and draining	$3,000
Permanent boiler-house, of brick	2,500
One 100-horse power boiler for steam-heating and connections	1,500
Steam-fitting and steam-pipes to old family building, radiators and connections	1,500
Purchase of machinery, tools, and fixtures, and for incidental expenses in establishing new mechanical industries, or so much thereof as may be necessary	3,000
Proceeds of farm and shops to be covered back into the Treasury to be divided equally between the District of Columbia and the United States.	
Two brick water-closets for use of main building and "A" family building	2,000
Painting buildings, including barn	1,000
To defray expenses of a representative of the Reform School of the District of Columbia at the International Prison Reform Congress to be held at St. Petersburg, Russia, or so much thereof as may be neccessary	750

This appropriation to be available at once. You will perceive that an increase has been asked for pay of teachers and assistant teachers and watchmen. This increase is necessary from the fact that the additional family building has been completed recently, giving the school a capacity of fifty more boys than it has heretofore had, requiring, therefore, more teachers and watchmen. Foremen of workshops will be required in instructing the boys in the new industries to be introduced.

The estimate for support of inmates is the same as for the present fiscal year.

An appropriation of $3,000 is asked for permanent improvement of roadways and approaches, including grading and draining. During the past season, owing to the heavy rains, the roads have been badly washed, which will require repairing at a considerable expense. A great deal of the land should be thoroughly drained to make it more productive, and much heavy grading is required to put the ground in thorough order and to make a proper play-ground for the boys.

It will be remembered that there are nearly 200 boys in the school, and recreation after their daily tasks are completed is necessary for their health and happiness. The physician in his report earnestly recommends a thorough system of permanent drainage for all the buildings and grounds as most necessary to the comfort and health of all upon the premises.

An appropriation has heretofore been asked to enable the trustees to fit up a proper play-ground, but it has never been made.

An appropriation of $3,000 is asked for a permanent boiler-house, of brick. Heretofore the boilers have been in the several buildings, but now they have been taken out and placed at some distance from the buildings, and steam conveyed by connecting pipes underground. This is not only more satisfactory, but avoids any possibility of danger from explosion of the boilers. The boilers are now protected by a temporary frame shed, which is in a dilapidated condition. If this appropriation is made, no more expense of this kind will have to be incurred. Another boiler is also necessary to complete this system of heating, and an additional appropriation of $1,500 therefor is asked. Also an appropriation of $1,500 is asked for the steam heating and steam pipes for the old family building, to be properly connected. The physician in his report places great stress upon the importance of this improvement at once.

An appropriation of $3,000, as before mentioned, is asked for the pur-

machinery, tools, benches, etc., and for the necessary expenses blishing new mechanical industries. This appropriation will not nable us to teach the boys useful occupations, but will add ma- y to the revenues of the school. You are aware that all revenue ed from the school is covered into the treasury and equally di- between the District of Columbia and the United States.

e closets for the use of the main and old family building are in a idated condition. They are eye-sores and should not be permitted main, and an appropriation of $2,000 is asked for two brick water- ts. As to the necessity for these closets from a sanitary stand- , attention is respectfully invited to the report of the physician, ith submitted.

international prison reform congress is to be held at St. Peters- , Russia, during the coming summer. This is not only a congress, lso an exposition. The trustees are desirous of having a delegate present the school. Our school is the only school of its kind in the ed States under the control of the General Government, and it ap- s meet and proper that it should be represented at this great meet- where, it is understood, nearly every institution of a similar char- r in the world will be represented. An appropriation for this pur- of $750 is asked. This will be money well expended, as the rep- ntative of the school can visit similar institutions, study their work- , and, doubtless from his observations, be able to introduce many rms and improvements in our school. It is the intention of the d of trustees to make a full display at this congress of all the diwork of the boys. No expense will attend this, as the congress ays all such expenses.

or the service of the last fiscal year there was appropriated as fol- :

ries	$12,596.00
port of inmates	26,000.00
In all	38,596.00
al disbursements	38,496.85
Unexpended balance	99.15
ck water-closets	1,200.00
al disbursements	998.00
Balance unexpended	202.00
dition to hog-pen	150.00
tal disbursements	137.24
Balance unexpended	12.76
ading, draining, and improving grounds	300.00
tal disbursements	285.40
Balance unexpended	14.60
iler-house, boilers, piping, and connections	4,000.00
tal disbursements	3,576.46
Balance unexpended	423.54

mmary of disbursements on account of current expenses during year ended June 30, 1889.

propriated for—

Salaries	$12,596.00	
Support, etc	26,000.00	
Total appropriated		$38,596.00

Disbursements:			
Pay roll account	$11,898.41		
Secretary and treasurer	600.00		
		$12,498.41	
Groceries		5,628.74	
Flour		2,887.08	
Fresh meats		2,083.20	
Dry goods, clothing, hats, etc		2,448.83	
Leather and shoes		566.80	
Gas and fuel		3,708.26	
Hardware, tableware, and housewares		381.45	
Furniture		625.19	
Farm tools, fertilizers, seeds, harness and repairs to same		1,814.17	
Books and stationery		308.07	
Repairs to buildings, including plumbing, painting and glazing		2,641.75	
Medicines and medical attendance		582.74	
Purchase of farm stock		966.00	
Sundry incidental expenses		737.66	
Compensation for additional labor and services		618.50	
Total			38,496.85
Leaving an unexpended balance of			99.15

There was received by the treasurer from the superintendent, during the fiscal year, the sum of $3,143.40, derived from work of the boys and other sources, which was covered into the treasury, one-half to the credit of the United States and one-half to the credit of the District of Columbia.

Your attention is respectfully invited to the report of the treasurer herewith, showing in detail the expenditures made during the past fiscal year.

During the past year, since the new family building was completed, the smaller boys have been separated from the larger. This is a great improvement. They are kept by themselves, and are located in the main building, directly under the eyes of the superintendent and matron. This change works more than well. The smaller boys are thus removed from many evil influences of the larger boys, and are where they are constantly under the immediate charge of the superintendent and matron.

In institutions of this character, long experience teaches that boys should be separated as much as possible, the larger from the smaller, and each family kept as small in numbers as can conveniently be done. No family should exceed fifty in number, and even this number is too large.

We have now three family buildings and each building should be limited to not exceeding fifty boys, but at times we have had as high as two hundred inmates in the school, causing an increase in the size of the families, and crowding the dormitories and school-rooms. It is not the intention of the board at present to ask for any additional family buildings, although another could be well utilized.

Under the law, as president of the board, I have on several occasions during the past year been forced to notify the courts to stop committing boys to the school on account of its crowded condition. This works a great hardship, and boys of tender years who should have been at the school have been sent to the work-house. Recently my attention was called by the District Commissioners to the fact that a large number of small boys were at the work-house and working in the chain-gang, the very worst possible use they could be put to or place they

ɔe sent. Although the school was crowded I made arrangements
e these boys transferred to the school as a matter of humanity
ıty. A few days at such a place as the work-house, associating
ld and confirmed criminals, soon hardens them and makes them
als for life. A dollar spent in the prevention of crime is worth
nds spent in its prosecution, to say nothing of the moral aspect
case.

ıay be said, it is true, that reformation is not worked in every
ɔr, if worked, is not always permanent. This may be true, but
y a small percentage of those who leave the school turn out well,
ıat much gained. We are safe in saying that a very large per-
ge turn out well and become useful and upright citizens, doing
elves and their instructors great credit. It is almost impossible
e members of the board to walk about the streets without daily
ıg many of the discharged boys, and with rare exceptions they
work, bright and cheerful, and all appear to be doing well.

ention is invited to the report of the attending physician, Dr.
ɔs A. Wells, and to the report of the superintendent herewith sub-
l.

account of the extraordinary wet weather during the past season,
ıt amount of extra work has been required of the larger boys.
vork consisted of draining, making roadways, and working upon
rm. The wet weather made it necessary in some instances to plant
op three times, and I regret to say that, owing to this, our crops
e small and of poor quality this season. It is, however, thought
elieved that they will be sufficient to meet all the needs of the
, or nearly so.

ɜ to be regretted that the bill introduced last session giving the
es the right to recall any discharged boy during his minority who
ir opinion was without a proper home, or for other and sufficient
ıs, failed to become a law. In most of the States such a law exists,
om extended inquiry I have learned that it works well and has a
beneficial and restraining effect, and it is earnestly hoped that
ill again invite the attention of Congress to this matter and
mend the passage of the law.

re have been but few changes among the employés of the school
ɾ the past fiscal year, and those only of minor importance.
officers have discharged their duties faithfully and well.

one except those who are familiar with the workings of an insti-
like this can be aware of the trying and difficult task they have
s before them. Their duties are never at an end, and from morn-
ıtil night and night until morning they must be watchful and
nt, and the trustees take great pleasure in commending them for
ithful discharge of the trusts imposed upon them.

Very respectfully,

A. J. FALLS,
President of the Board.

ı. ATTORNEY-GENERAL.

Report of the Superintendent.

REFORM SCHOOL OF THE DISTRICT OF COLUMBIA,
October 1, 1889.

GENTLEMEN: I have the honor to present herewith my annual report for the fiscal year ending June 30, 1889.

Our school records furnish the official statements and statistical information that hereinafter follow, viz:

Total number received since opening	1,386
Total number of deaths since opening	9
Rate of mortality, five-eighths of 1 per cent.	
	Years.
Average age of boys received since opening	13
Age of oldest boy when received	16
Age of youngest boy when received	8
Nuruber of boys in instituti n June 30, 1889	155
Received during the year as follows:	
From supreme court, D. C	9
From police court	49
From President of the Board	26
	84
Total population during the year	239
Number received on first commitment	80
Number received on second commitment	4
	84
Average age of boys received during the year	12.6
Maximum number during the year	186
Minimum number during the year	151
Average number during the year	172
Number of boys discharged during the year, viz:	
By order of the Board of Trustees	45
By change of sentence police court	4
By escape and still absent	5
	54
Number remaining June 30, 1889	185
Shortest time for discharge on "honor badge" ..... months	19
Nativity of boys received during the year, viz:	
American	71
Irish	6
German	5
Italian	1
Bohemian	1
	84
Cause of commitment, viz:	
Incorrigibility	46
Larceny	22
Vagrancy	8
Assault	1
House-breaking	5
Disorderly assembly	2
	84

l relations of boys received during the year, viz:

nber having both parents living	44
nber having lost father by death	21
nber having lost mother by death	13
nber having lost both parents by death	6
nber having parents living in separation	4
nber having step-father	9
nber having step-mother	3

s training of boys prior to commitment, viz:

tist	26
holic	15
scopalian	7
thodist	23
sbyterian	1
ngregationalist	1
brew	1
early religious training	10
	84

tional grade when received, viz:

mber who did not know the alphabet	8
mber who knew the alphabet only	14
mber who could spell in one syllable	2
mber who could read primary lessons	30
mber who could read tolerably well	18
mber who could read well	12
	84

mber who could not write	34
mber who could write indifferently	22
mber who could write legibly	13
mber who could write well	14
	84

Number who had not studied arithmetic	68
Number advanced in multiplication	2
Number advanced to long division	3
Number advanced to fractions	11
	84

FINANCIAL STATEMENT.

ie superintendent has received from various sources, and turned the e over to Samuel W. Curriden, treasurer of the school, who has red the same into the United States Treasury to the credit of the ted States and the District of Columbia jointly, as follows, viz:

received from chair-shop account	$1,702.47
received from farm products	443.73
received from green-house account	667.51
received from paper-box account	257.67
received from miscellaneous sources	72.03
Total	3,143.41

nother year of active school life and work has passed into the do- n of history.

n addition to facts already stated in figures and other information lated for convenient reference, I will further call your attention as fly as possible to what has been accomplished in the past, and no- some of our most pressing needs for the coming fiscal year.

uch of our school work is necessarily monotonous. The events and rrences of each succeeding day may differ somewhat from those of

its predecessors, but they all bring with them a round of duties and responsibilities essentially the same.

These conditions naturally formulate a routine for each succeeding year, which will explain, and in a measure excuse, much that is required in these official records from year to year.

This does not imply, however, that our work is not in the highest sense progressive. We claim, in fact, this higher condition for the school in the year just closed—the twentieth in its history and the eighth in which the writer has been honored with your confidence and favor in its executive government.

It is a pleasant duty, although seemingly monotonous, to speak of this work, so vital in its interests to hundreds of deserving boys, and of what it has accomplished in their behalf; but especially is this true when speaking of the numbers you have honorably discharged, for we certainly know that a large proportion of them are well and permanently located in business of their own, or employed profitably by others, and that they are making a creditable record both for themselves and the school in their now widely separated homes.

These facts are named in this connection as they stand in evidence that the aims of the institution are steadily and surely being accomplished, and that your efforts in behalf of these boys—many of them otherwise homeless and dependent—have resulted in lasting good to them as individuals, to society, of which they must form a part, and to the nation, that may safely claim them as citizens.

Much must depend, as to the future of these boys, upon the character of the homes they go to after their final discharge; and still more, perhaps, upon their success in obtaining ready and suitable employment.

This latter, however, is not always possible; often because you are not provided with the necessary means for instructing them in useful trades or occupations while inmates of the school.

If there be truth in the adage "An idle brain is the devil's workshop," then it must follow that idle hands are the ready tools with which he works. Honest employment of some kind must ever be considered a great incentive to well doing. It is healthful exercise for both brain and muscle, and hence children should be early taught to labor judiciously with both.

Few take to it naturally or accept even its lighter burdens from choice, but the twig once bent—the habit thus established—the one must become a law as binding upon the matured child as will the other upon the full-grown tree.

This leads to the fair conclusion that our boys should all be taught to work, and, when possible, to work intelligently; that when of suitable age they should be educated in the skillful use of mechanical tools and other appliances commonly used in the constructive arts. It means, in a word, that they should be taught some useful trade, as skilled labor is always in demand and always remunerative.

Many of our boys are not only capable of learning but willing and anxious to take advantage of such an opportunity, even if required to remain a longer time in the school.

These suggestions are offered as an open and earnest petition in their behalf.

The appeal is to you, trusting that in the exercise of your personal and official influence with those whose privilege it is to grant the required means you may soon be able to establish a line of practical industries in this school, itself a ward of the nation, an only child, in fact, and one not unworthy of its fostering care.

ave been led to make this appeal for Congressional aid in this
l direction more urgent than ever before on account of our recent
e to renew a long-standing contract for chair-caning, which ex-
at the close of the present fiscal year.
o not favor this class of work except perhaps for the smaller boys,
hen only because it serves to keep them employed a portion of
time at light labor and without strain or detriment to health. The
in itself cannot be classed as a profitable trade or calling.
may become possible in the near future to substitute for this some
light labor, such as the making of cheap wooden toys, or knitting
tton and wool.
anwhile there is a ready alternative at hand, as the former work-
ours can be profitably spent in the school-room.
is must of course cause a marked reduction in our moneyed income
remunerative labor of some kind has been secured.
to the older boys, we can always find more than enough to keep
busy, except perhaps during the extremes of winter weather,
n they can not be employed to profit in the open air.
ur large farm makes a very extensive and ever-ready workshop, and
e enough to accommodate in this way double the amount of muscle
ur command.
uring the present year, as indeed since the farm was first occupied
he school, it has required heroic treatment, including more than a
ger annual expenditure in efforts, to reclaim portions of its worn
wasted soil.
his has proved an exceptionally trying year to the farmer, requiring
e than the average share of labor and expense, occasioned by the
ost continuous rain-storms throughout the entire planting season,
n necessitating a triple quantity of seed to supply losses entailed
these destructive floods.
ut during all these years, in addition to the customary farm work,
amount of manual labor not readily calculated in dollars and cents
been required and expended annually in the construction and re-
r of roadways, opening up and preparing new ground for tillage,
king and repairing fences, planting and cultivating orchards, exca-
ing for foundations for new buildings, laying new and extending old
es of sewerage, together with ditching and paving for surface drain-
, and, where required, piping for subdrainage of grounds.
arge bodies of surplus earth have been broken and removed from
ightly hills to fill and level up still more unsightly hollows, until
ny localities have virtually been transformed, and made servicable as
ll as attractive to the eye, by thus securing suitable grades and cov-
ng the new-made surface with shrubs and grasses.
Work of this character, which would otherwise have cost the Govern-
nt many thousands of dollars, has been done by the older boys under
supervision of the former, assisted by officers of the several families.
As to the annual product of the farm, most of our early summer crops
below the average both in quantity and quality.
Of hay and grass there has been a bountiful supply, and so also of the
er field-corn.
Our standard fruits all gave early promise of an abundant yield, but
unusually wet season, with other local causes, almost entirely pre-
ted their maturity. But for this we must have had a large surplus
apples and peaches, as these orchards are each quite extensive and
tain many choice varieties of fruits.

The crop of Concord and white Niagara grapes,—once a source of considerable annual revenue to the school—again proved a complete failure, as it has for several successive years, and from the same causes that have produced like results in other large vineyards in this locality.

Important improvements have been made during the year, and much necessary repairing done in connection with the several departments of the school. To speak of each in detail would include the work of skilled artisans in many branches of mechanical industry, and include the names and value of countless articles, from the smallest gas-jet to a steam-boiler of ample dimensions.

Our principal buildings have been in use for many years, long enough, at least, to require frequent and often extensive repairs.

In this connection it may, however, be fairly claimed that our standard is above the general average, as compared with others, in the kind and quality of the supplies you have always and uniformly provided for the healthful maintenance, including the care and personal comfort, of every boy under your control.

The new family building has been completed and occupied since January last, by our "B" family, which now consists only of the larger white boys.

This necessitated the organization of another division, which is located in either wing of the main building and known under the new arrangement as "family C." The addition of this new building has made it possible to complete your matured purpose, by which the smaller boys are now congregated in one building, separate and apart from all others.

Additional officers and teachers have been employed to meet this contingency, which explains the increase in the amounts required for salaries of this class, and should be added to your estimates for the coming year.

The use of this additional building has offered the first and only opportunity for safely increasing our population, and already the result is an average number of inmates larger than ever before. Another advantage gained was a speedy reduction of population in buildings that had long been overcrowded; but the most important result secured by this has been the placing of boys of about the same relative ages together and in a separate building distinctively their own.

The organization of our new family also necessitated changes in the former school grades, and we now have six daily sessions, holding about four hours each, in the several school-rooms.

It has not been found necessary to make any marked changes in the character or conduct of our educational work. Special attention has always been given to this important department during the time our regular school sessions are in progress.

Every boy is expected, when in health, to spend a portion of each school day in study, and none are excused from a regular attendance upon one daily session except by permission of the superintendent.

In addition to the stated lessons frequent repetitions, in concert, of the multiplication tables are required. Such exercises, however, are confined to the short evening sessions, conducted by the teacher in charge, who usually arranges his own programme, without reference to fixed rules.

Ordinary methods now employed by the more advanced instructors in our public schools are accepted as models and the routine of daily study adopted as far as practicable.

Our books for instruction in reading, writing, arithmetic, and geogra-

are much the same as those in present use in the District common
ols, and recitations in these fundamental studies cover a large pro-
lon of the time each boy is required to spend in school.
veral classes, however, in the highest grades, recite in algebra, ge-
try, and history, but these studies are confined to boys in our "B"
ly, and their recitations are made to the senior teacher, often after
egular sessions have closed.
nder existing rules boys can only be discharged on their "Honor
ge" and after having acquired some knowledge of arithmetic in its
primary divisions, together with a fair ability to read and write and
cite readily the multiplication tables.
ie requirements under this wholesome rule have provided a wonder-
ncentive to increased application in study with most of our boys, and
the dullest intellect will sometimes gather sufficient courage from
new source of inspiration to gain such promotion in his class as will
re to him finally the proffered boon—his honorable discharge.
ie hours for work and school remain unchanged from former years,
sharing about equally in the daily distribution during the eight
inuous months in which the schools are in session.
his gives a long recess in study, but no corresponding relief is pos-
e when applied to labor, as the demand for that is doubled during
busiest season of the year, and when our farm requires aid of every
old and strong enough to assist in either field or garden work.
ut not of every boy, indeed; for there is a large reserve that can
er be spared for outside work, however pressing the demand may
and exception must be made of these many trusted boys employed
ndoor labor of various kinds in this most important branch of all
school industries. This small army of faithful helpers is per-
iently detailed, and kept on duty late and early, every day in seven,
ler the direction of competent instructors, male and female.
he demand for this large amount of domestic and other miscellaneous
or is both incessant and imperious, and, like "time and tide," waits
no one.
leanliness with us may not always reach the Apostle's higher stand-
but it is valued nevertheless to an extent that prompts us to keep
nly the platter but "every nook and corner clean."
are ever and continually reminded of the fact, and realize it more
every day, that the mouths of hungry boys are ever clamorous for
and empty stomachs of this particular kind and gender are ever
g to be filled, and that, too, with a triple daily allowance measured
scriptural standard. And still further, "through summer's heat
inter's cold," this same jubilant rollicking boy, duplicated by
eds, must have the body comfortably clothed as well as fed, and
usly cared for in other innumerable ways.
d thus it goes through each successive day, from week to week
onth by month, until the "rounded year" has passed.
s readily suggests the inevitable daily round of duties that depend
ly upon these youthful helpers, calling them to service under
and bakers, tailors and shoe-makers, and others of not less im-
nce in their several positions.
ncludes, as well, matrons of families, housekeepers and others in
e of dining-rooms and laundry, each intrusted with a portion of
large array of help, and all thus adding their quota to the aggre-
of the domestic labor so necessary to the healthful life and daily
rt of themselves and others.
d yet the product of this labor is in no sense a source of revenue

to the school, nor does the entire force of boys—all wage-earners, if so employed, outside—bring any moneyed income or add directly to the financial resources of the school.

But with all this work of hand and brain there is never wanting to each and every boy his just proportion of play and recreation.

This serves to shorten the duller hours assigned to labor and makes their seeming burdens tolerable to even the most indolent.

I venture the opinion that, whether here or elsewhere, no well spent working day should ever pass entirely where numbers are employed together without some rays of sunshine reaching it from boyish hearts, made bright and glad by healthful exercise and friendly contact with their fellows on the play-ground.

By right of birth and natural inheritance every fair-minded boy is entitled to certain shares in fee simple of this kind of realty, and all power must be arbitrary in itself that would seek to wholly disinherit him.

Estimates have been submitted to the proper authorities for current expenses and for necessary improvements and repairs.

As named and aggregated in your report to the honorable the Attorney-General and honorable Commissioners of the District of Columbia, the figures do not exceed or overestimate our real wants and necessities for the coming fiscal year.

Your attention is respectfully directed to the condition of our school grounds, especially to the boys play-ground, adjacent to the main and "A" family buildings.

These grounds have never been properly graded, and will require a liberal expenditure to make them of any practical benefit to the school.

Owing to their location, which is most unfavorable, but made from necessity rather than choice, they will require much additional grading, together with a retaining-wall several feet in height.

This wall is required also to protect the roadway adjoining, and to keep it from washing out entirely.

Our older boys, working in the common interests of all, will gladly contribute much of the labor required to complete this much needed improvement.

Next in importance in this connection is that portion of the grounds lying immediately in front of and west of our main building.

This entire frontage will require new fencing to protect it from intrusion from the public roadway, which also forms the boundary line on this side of the farm.

A large portion of this ground is badly depressed, very uneven and broken in surface, and, in places, drops below the road level.

During heavy rains, as in the present season, these lower grounds are covered with water much of the time, and thus rendered entirely useless for farming purposes.

Even in ordinary seasons the soil is damp, sour, and comparatively worthless.

By thorough and systematic drainage these conditions could be readily changed, and at reasonable cost.

Our principal roadway enters and leads up, through these grounds, to the main and other buildings, and the lands should therefore be made both productive and attractive in appearance.

As a purely sanitary measure, and to free them from noxious and malarial exhalations, during the heat of summer they should receive the prompt attention their condition so urgently demands.

The erection of our new family building necessitated changes in

roadways, and permanent brick walks should be laid between it and other buildings.

The lawn immediately surrounding will require new grades and further drainage.

The new building should also be painted and made to conform in its outward appearance to others near by.

An additional boiler equal in size and capacity to the one in present use should certainly be provided, and with the least possible delay. This would complete our new steam-heating plant and furnish heat sufficient to warm all our buildings even in the coldest weather, including workshops and greenhouses.

We should have this boiler to use as an alternative in case of accident or when repairs are needed to the one in use.

It is not safe to be entirely without expedients in a matter so important to the health and comfort of our large population.

There might a contingency arise of this character with the thermometer at zero, and as now no possible relief at hand.

This self-apparent need should make its own most direct and successful appeal.

A suitable building is also required of sufficient dimensions to shelter this steam-heating plant and provide quarters for the engineer in charge, as well as to provide against frosted water-pipes and accidents from other possible sources.

Our coal vaults, partly provided for in a former appropriation, should be enlarged by necessary additions sufficient to hold the requisite amount of fuel to last throughout the longest winter, as we are far removed from ready sources of relief.

The "main" and "A" family buildings, together with the barn and other outbuildings, need painting, to protect them from the weather.

Other and strictly ordinary repairs are provided for in the appropriations for current expenses, but this should receive a merited addition of not less than $1,000.

I trust you will be able to present these just and reasonable claims with such force and earnestness of purpose to the Congress soon to assemble that every dollar asked in your estimates so carefully prepared will receive from them a full and prompt approval.

The general health of the school throughout the year has been quite equal to the average of its many predecessors. No epidemic or contagious diseases of any kind have been prevalent in the school, and no deaths have occurred among our boys from any cause.

The same favorable report was made for the year preceding this one. The attending physician, Dr. Charles A. Wells, has paid us many visits, meeting promptly all demands the school has made upon his time and skill, and to the entire satisfaction of his patients, young and old.

His annual report, already in your hands, covers all necessary details concerning this one department, in which, to us, his word is law.

In accordance with usual custom, our religious services have been steadily held throughout the year on Sabbath afternoons at 3 o'clock. These services are open and free to all, and are not held in the interests of any one sect or denomination, and hence are not intended to be doctrinal in their tendencies and teachings.

For the kind offices of ministers and others, who from time to time have favored us in the conduct of these always interesting Sabbath-day exercises, we here record our grateful acknowledgments, and bid them, each and all, a cordial welcome back as time and opportunity may jointly make occasion for their coming.

Our Sabbath-school sessions have also been held in each family regularly at 10 o'clock every Sabbath day. As heretofore, the lesson-papers published by the American Sunday School Union are always used.

Officers and teachers in care of the several families have special charge of these exercises, and the superintendent seldom fails to be present in each family during some portion of the time occupied in these sessions.

All of our boys in connection with the Catholic faith and order assemble Sabbath afternoons for special instruction under teachers who come from the city for that purpose.

Rev. E. A. McGurck, president of Gonzaga College, continued his monthly visits throughout the year on Sabbath mornings to conduct a special service and administer the sacraments.

I have always favored the most liberal provision for a suitable observance of our annual holidays. They are few enough at best, and the intervals between them long indeed when measured by the average boy.

"Thanksgiving day" is always welcomed at our school, and this proved no exception, as it brought the usual rest from work and study. But more than this and better still it brought a rich supply of all that served to fill and satisfy the "inner boy"—of "roasts and pies and puddings rare." For blessings such as these, at least, there were many thankful hearts that bright November day.

But "Fourth of July" and "Merry Christmas" are our true red-letter holidays, and in their time and season were fitly honored—the one appropriately garlanded with buntings striped and starred, the other crowned with pines and decked with hollies, green and red.

"The Fourth" was loud from shouts of boyish victors in their games and sports by day, and noise of bursting bombs and flying rockets filled the air by night.

Our Christmas, too, was joyous in its revelries, but of a milder type, and changed as well in all it brought of jingling bells and tooting horns, with good old Santa Claus to meet a host of merry boys, and well prepared to stuff, with nuts and sweets of various kinds, their gaping pockets to the full.

Thus came and passed these bright memorial days, with neither strife nor accident to mar, "for all went merry as a marriage bell."

Our annual entertainment, as given by the boys selected and prepared for their several parts under competent instructors, was given at the school, as usual, in the month of January.

The attendance was large, all we could accommodate, including the president and several members of the board of trustees, with other good friends, ladies and gentlemen, and all were happy judging from the hearty rounds of applause at the end of each separate performance.

Mr. W. K. Cohen, our teacher of vocal music, took charge of his special part of the programme, conducting it throughout with marked success. We were also favored by a number of fine cornet accompaniments by Professor Gibson.

Other pleasant literary and musical entertainments were given on different occasions by ladies and gentlemen, all good friends of the school, and should this paragraph ever come to their personal notice, each and all may safely accept it as a deserved tribute to the professional worth, and as a token of gratitude from us for favors thus graciously extended.

I have to acknowledge, and do so very cordially, the receipt of many favors from friendly hearts and hands that have come so opportunely to our boys at stated times during the year.

otice first that from the general post-office there has been re-
nonthly a sack containing printed matter, consisting of stand-
azines, periodicals of various kinds, illustrated newspapers, and
xcellent reading especially suited for our older boys.
d to these are many beautiful cards, prints, and valentines, all
y selected, as was the reading matter, by the good ladies in
of the official distribution made at the instance of the honorable,
stmaster-General.
a other sources we have received many similar favors and, on
ns, complete files of choice weekly papers such as Youth's Com-
, Harper's Young People, and Golden Days, all pleasant and
ble reading for boys.
have given hearty welcome also to regular copies of several
journals that have come to us from friends in distant States.
imes, like Zaccheus of old, they are "small of stature," but in that
s all are creditable specimens of the printer's art. Among these
me The Advance, from the State Reform School, New Jersey;
chool Enterprise, from the Lyman School for Boys, Massachu-
and The Howard Times, from the State Reform School of Rhode
l.
changes have been made within the year in our official working
other than were occasioned by the re-organization of the several
es, and but few in our entire force of employés.
co-workers with me, each in a separate sphere, yet I trust with
me common good in view, to each and all I am truly grateful
sistance timely rendered and for that efficient help which always
from faithful service.
you, gentlemen of the board of trustees, I submit this report,
ssing here my gratitude for your continued confidence in the be-
at I have met your approval in all my efforts to do your will
ghout another year of prosperous work.
the Infinite Giver, who governs all, belongs the expression of our
st gratitude and highest praise.
pectfully submitted.

G. A. SHALLENBERGER,
Superintendent.

BOARD OF TRUSTEES.

REPORT OF THE TREASURER.

REFORM SCHOOL OF THE DISTRICT OF COLUMBIA,
Washington, D. C., September 17, 1889.

NTLEMEN: I have the honor to transmit herewith statements in
of my receipts and disbursements as treasurer of the Reform
l during the fiscal year ended June 30, 1889.
ve also received from the superintendent of the school during the
year the sum of $3,143.40, being revenues derived from labor of
es and other sources. In accordance with the act of Congress ap-
d 25th of February, 1885, I have paid the same into the Treasury
United States to the credit of the United States and the District
umbia in equal parts.
Very respectfully and truly,

SAM'L W. CURRIDEN,
Treasurer.

BOARD OF TRUSTEES.

Receipts and disbursements of S. W. Curriden, treasurer of the Reform School of the District of Columbia, for the fiscal year ended June 30, 1889.

RECEIPTS.

Current expense accounts:	
Appropriation for salaries	$12,596.00
Appropriation for support of inmates	26,000.00
Total appropriation	38,596.00

DISBURSEMENTS.

Month.	Name.	For what expended.	Amount.
1888.			
July		Pay-roll for month of July	$933.00
	Philip Nicholas	Compensation	25.00
	George Gilbert	do	19.00
	Henry Logan	do	18.00
	William McDevitt	do	12.00
	Louisa Johnson	do	7.50
	George A. Shallenberger, superintendent	Sundries	10.30
August	William M. Galt & Co	Flour	221.97
	B. R. Scannell	Meat	157.80
	George M. Oyster & Co	Butter	102.70
	Beall & Baker	Groceries	71.89
	Hume, Cleary & Co	do	79.99
	Browning & Middleton	do	134.87
	Lansburg & Bro	Dry goods	16.37
	Woodward & Lothrop	do	32.28
	Eiseman & Bros	Clothing	11.00
	B. J. Behrend & Son	Sundries	11.05
	Tschiffely & Evans	Medicine	9.47
	Robert Cohen	Shoes	24.35
	W. L. King & Bro	Leather, etc	12.27
	H. A. Clarke & Son	Coal	13.05
	Washington Gas-Light Company	Gas	14.13
	John A. Baker	Pump	32.15
	W. T. Walker's Son	Cement	19.00
	E. N. Gray & Co	Grates	6.76
	F. P. May & Co	Hardware	27.93
	M. W. Beveridge	Tableware	13.37
	Andrew Barbaud	Cementing walls	29.70
	J. E. Berry	Carriage hire	12.00
		Pay-roll month of August	933.00
	Philip Nicholas	Compensation	25.00
	H. Logan	do	18.00
	William McDevitt	do	9.00
	Louisa Johnson	do	7.50
	G. A. Shallenberger, supt	Sundries	17.91
September	Robert Cohen	Shoes	39.25
	C. A. Wells	Medical services	50.00
	Washington Gas-Light Company	Gas	19.63
	Browning & Middleton	Groceries	199.29
	Hume, Cleary & Co	do	232.70
	Beall & Baker	do	6.55
	George M. Oyster & Co	Butter	81.06
	Independent Ice Company	Ice	15.98
	G. F. Swift & Co	Meat	173.99
	William M. Gault & Co	Flour, etc	229.47
	Lansburg & Bro	Dry goods	78.67
	Woodward & Lothrop	do	91.32
	Eiseman Bros	Clothing	23.50
	Saks & Co	do	5.06
	B. J. Behrend & Son	Sundries	7.92
	W. L. King & Bro	Shoe findings	17.64
	J. M. Lauxman	Blacksmithing	20.70
	O'Neill Bros	do	8.25
	George Ryneal, jr	Paints, etc	7.85
	T. W. Smith	Lumber	8.44
	G. T. Blake	Washers	4.00
	Craig Bros	Plants	38.70
	John A. Baker	Tools	24.09
	George Watts	Housewares	8.52
	M. W. Beviridge	do	8.37
	Evening Star Newspaper Company	Advertising coal proposals	9.60
	J. E. Berry	Carriage hire	20.00
	Olcott & Cooper	do	8.00
	Guy Curran & Co	Dry goods	11.34
	William H. Ernest	Flower pots	15.70
	William R. Riley	Dry goods	13.35

Receipts and disbursements of S. W. Curriden, etc.—Continued.

DISBURSEMENTS—Continued.

	Name.	From what expended.	Amount.
ir...	Tschiffely & Evans	Medicine	$26.55
	J. L. Parsons	Carpentry	20.00
		Pay-roll month of September	918.00
	W. K. Cohen	Compensation	25.00
	Philip Nicholas	....do	25.00
	John H. Slack	....do	15.00
	Louisa Johnson	....do	7.50
	Browning & Middleton	Groceries	172.28
	Hume, Cleary & Co	....do	139.27
	Beall & Baker	....do	15.13
	Wm. M. Galt & Co	Flour, etc	200.22
	Thomas T. Keane	Meat	178.51
	James F. Oyster	Butter	57.32
	N. White & Co	Oysters	8.60
	Tschiffely & Evans	Medicine	20.40
	Lansburg & Bro	Dry goods	32.28
	Woodward & Lothrop	....do	187.98
	Guy, Curran & Co	....do	12.36
	Eiseman Bros	Clothing	8.00
	Robert Cohen	Shoes	58.90
	W. L. King & Bro	Shoe findings	15.39
	William Ballantyne & Son	Stationery	5.65
	D. W. Beveridge & Co	Wire screens	9.00
	F. P. May & Co	Hardware	13.29
	M. W. Beveridge	Table ware, etc	24.72
	Columbia Railroad Company	Manure	109.20
	Washington Brick Machine Company	....do	99.60
	Smith, Powell & Lamb	Farm stock	566.00
	J. E. Berry	Conveyance	12.00
	Andrew Barbour	Mason work	18.00
	G. A. Shallenberger, superintendent	Sundries	19.70
	Independent Ice Company	Ice	30.40
	John A. Baker	Farm tools	11.50
	E. N. Gray & Co	Grate bars	46.27
	C. Giebel	New cart, etc	36.93
	....do	Repairs to carts	32.50
	J. T. Walker's Son	Cement	5.65
	L. H. Schneider's Son	Hardware	7.15
	Chesapeake and Potomac Telephone Company	Service to Sept. 30	37.50
	S. W. Curriden	....do	150.00
.....	Washington Gas-Light Company	Gas	55.50
	W. I. Holtman	Cattle powders	5.01
	Allan R. Adams	Copying	22.50
		Pay-roll month of October	933.00
	Philip Nicholas	Compensation	25.00
	W. K. Cohen	....do	25.00
	Henry Login	....do	16.00
	Louisa Johnson	....do	7.50
	J. P. Agnew & Co	Coal	1,503.00
	G. A. Shallenberger, superintendant	Sundries	13.55
ir...	William M. Galt & Co	Flour	211.35
	Hume, Cleary & Co	Groceries	51.71
	Browning & Middleton	....do	182.08
	Beall & Baker	....do	85.98
	W. L. Anderson	Kraut	8.50
	Thomas T. Keane	Meat	170.28
	J. J. Hogan	Oysters	11.70
	James F. Oyster	Butter	89.96
	Independent Ice Company	Ice	74.55
	Woodward & Lothrop	Dry goods	104.60
	Lansburg & Bro	....do	226.09
	B. J. Behrend & Son	....do	15.00
	Eiseman Bros	Clothing	24.00
	C. H. Garden & Co	Caps	61.75
	W. L. King & Bro	Leather	25.29
	Robert Cohen	Shoes	30.35
	William Ballantyne & Son	Books, etc	44.21
	E. L. Kellogg & Co	School books	3.03
	Harold Roarback	....do	3.10
	C. A. Wells	Medical services	62.00
	Tschiffely & Evans	Medicine	8.80
	Washington Gas-Light Company	Gas	76.25
	M. W. Beveridge	Table ware	9.22
	George Watts	....do	6.23
	George Rynex, jr	Paint, etc	21.50
	James L. Parsons	Repairs	38.50
	John McDermott & Bro	Repairs to vehicles	65.00
	L. H. Schneider's Son	Hardware	5.95

Receipts and disbursements of S. W. Curriden, etc.—Continued.

DISBURSEMENTS—Continued.

Month.	Name.	From what expended.	Amount.
1888.			
November ..	G. N. Holland	Lime and cement	89.85
	William Lochte	Blacksmithing	3.75
	O'Neill Bros	....do	9.00
	Thomas Somerville & Son	Pipe	23.46
	T. C. Bassior & Co	Pump	20.00
	John A. Baker	Seed	17.40
		Pay-roll month of November	933.00
	William K. Cohen	Compensation	25.00
	Philip Nicholas	....do	25.00
	Louisa Johnson	....do	7.50
	George A. Green	Plumbing	644.00
	George Gilbert	Paving	18.00
	Henry Logan	....do	18.00
December ..	Andrew Barbour	Mason work	18.00
	William M. Galt & Co	Flour	239.20
	Thomas T. Keane	Meat	171.56
	J. J. Hogan	Oysters	13.13
	Browning & Middleton	Groceries	247.21
	Hume & Co	....do	214.50
	James F. Oyster	Butter	71.31
	Independent Ice Company	Ice	71.75
	Tschiffely & Evans	Medicine	15.00
	Woodward & Lothrop	Dry goods	49.90
	Lansburg Bros	....do	11.76
	Pitkin & Thomas	....do	55.20
	Guy, Curran & Co	....do	21.60
	B. J. Behrend & Son	....do	9.87
	R. Cohen	Shoes	27.55
	J. P. Agnew & Co	Coal	590.00
	Washington Gas-Light Company	Gas, November	75.75
	J. M. Lauxman	Blacksmithing	18.80
	C. Giebel	....do	11.95
	William Lochte	....do	9.79
	J. D. Milans	Printing	18.50
	F. P. May & Co	Hardware	14.98
	M. W. Beveridge	Table ware	18.45
	Thomas Somerville & Sons	Pipe, etc	9.63
	William H. Harrover	Tinning	27.57
	....do	....do	6.20
	Daniel Hannan	Spigots	7.75
	George Ryneal, jr	Paint, etc	14.75
	T. W. Smith	Lumber	18.52
	C. Strauss & Co	Plants	11.50
	J. E. Berry	Conveyance	8.00
	....do	....do	16.00
	G. A. Shallenberger, superintendent	Sundries	10.70
		Pay-roll, December	918.00
	J. W. Slack	Compensation	18.00
	Philip Nicholas	....do	25.00
	William K. Cohen	.... do	25.00
	L. Johnson	....do	7.50
	A. O. Brummel	Repairs to roof	49.00
	George A. Shallenberger	Sundries	22.30
	William M. Galt	Flour and feed	268.85
	G. F. Swift & Co	Meat	120.81
	Browning & Middleton	Groceries	138.19
	Hume & Co	....do	129.98
	Beall & Baker	....do	76.31
	C. A. Denekas	Yeast	20.75
	James F. Oyster	Butter	107.93
	J. J. Hogan	Oysters	10.50
	C. A. Wells	Medical services	66.00
	Tschiffely & Evans	Medicines	15.20
	John P. Agnew & Co	Coal	129.00
	Lansburg & Bro	Dry goods	83.41
	Guy, Curran & Co	....do	28.64
	B. J. Behrend & Son	....do	10.42
	Eiseman Bros	Clothing	29.00
	William Hahn & Co	Shoes	25.55
	W. L. King & Bro	Leather, etc	21.08
	M. W. Beveridge	House ware	8.85
	Washington Brick Machine Company	Manure	101.20
	Columbia Railroad Company	....do	109.20
	K. Kneesi & Son	Repairs to harness	14.25
	O'Neill Bros	Blacksmithing	7.00
	John A. Baker	Wheelbarrow	8.50
	J. D. Free & Co	Stationery, etc	28.51
	William Lochte	Blacksmithing	16.01

Receipts and disbursements of S. W. Curriden, etc.—Continued.

DISBURSEMENTS—Continued.

	Name.	For what expended.	Amount.
	F. P. May & Co	Hardware	$11.94
	George Ryneal, jr	Paint, etc	12.20
	Daniel Hannan	Plumbing	5.00
	J. E. Berry	Conveyance	12.00
	Chesapeake and Potomac Telephone Company	Telephone	37.50
	do	do	75.00
	S. W. Curriden	Services to December 31	150.00
	Rider & Addison	Stationery	5.66
	G. J. Muller	Sundries	22.78
	Woodward & Lothrop	Dry goods	46.87
	William Ballantyne & Son	Stationery	12.55
	B. P. Murray	Entertainment	10.00
	James L. Parsons	Repairs to laundry	51.50
	do	Towel-racks	9.00
	Washington Gas-Light Company	Gas, December	92.95
	D. W. Beveridge & Co	Wire work	24.60
		Pay-roll month of January	943.00
	W. K. Cohen	Compensation	25.00
	Louisa Johnson	do	7.50
	Philip Nicholas	do	25.00
	G. W. Nichols	Pay-roll	40.00
	G. A. Shallenberger, superintendent	Sundries	19.83
	Hume & Co	Groceries	117.09
	Browning & Middleton	do	113.31
	Beall & Baker	do	136.72
	W. S. Anderson & Co	Provisions	8.00
	J. F. Oyster	Butter	94.57
	William M. Galt & Co	Flour, etc	244.95
	Nelson, Morris & Co	Meat	142.95
	J. J. Hogan	Oysters	5.25
	R. Cohen	Shoes	44.60
	W. L. King & Bro	Shoe findings	16.56
	Pitkin & Thomas	Dry goods	76.70
	Woodward & Lothrop	do	63.87
	Lansburg & Bro	do	13.54
	Guy, Curran & Co	do	13.77
	Washington Gas-Light Company	Gas, two months	99.70
	Tschiffely & Evans	Medicine	14.80
	William Ballantyne & Son	Stationery	23.96
	J. T. Walker's Sons	Cement	2.45
	George Ryneal, jr	Paint	9.70
	William Lochte	Blacksmithing	11.63
	M. W. Beveridge	House ware	22.05
	F. P. May & Co	Hardware	6.79
	L. H. Schneider's Son	do	10.12
	George F. Blake	Valves	3.50
	S. S. Shedd & Bro	Gas fixtures	35.95
	R. Leitch & Sons	Pipe and fittings	6.88
	Thomas Somerville & Sons	do	49.22
	T. C. Bassbor & Co	do	7.80
	J. E. Berry	Conveyance	22.00
		Pay-roll, month of February	934.67
	Louisa Johnson	Compensation	7.50
	Philip Nicholas	do	25.00
	W. K. Cohen	do	25.00
	G. W. Nichols	Salary, teacher, pay-roll	40.00
	John Dixon	Painting	10.00
	Eugene White	Salary as watchman	8.33
	Browning & Middleton	Groceries	150.09
	Hume & Co	do	115.89
	Beall & Baker	do	76.53
	William M. Galt & Co	Flour	238.53
	Nelson Morris & Co	Meat	160.60
	J. J. Hogan	Oysters	9.75
	James F. Oyster	Butter	87.65
	Tschiffely & Evans	Medicine	22.24
	Woodward & Lothrop	Dry goods	96.32
	Lansburg & Bro	do	51.44
	Guy Curran & Co	do	20.41
	Eiseman Bros	Clothing	35.50
	Robert Cohen	Shoes	17.80
	W. L. King & Bro	Leather	8.76
	John P. Agnew & Co	Coal	430.50
	Washington Gas Light Company	Gas	46.00
	Charles H. Dickson, agent	Rental gas governor	10.00
	William Ballantyne & Son	Stationery	9.05
	J. D. Milans	do	9.70

Receipts and disbursements of S. W. Curriden, etc.—Continued.

DISBURSEMENTS—Continued.

Month.	Name.	For what expended.	Amount.
1889.			
March	William H. Ernest	Flower-pots	$17.00
	M. W. Beveridge	House ware	16.80
	F. P. May & Co	Hardware	4.24
	George N. Holland	Lime	6.05
	S. S. Shedd & Bro	Gas fixtures	5.50
	George Ryneal, jr	Paint, etc	16.05
	Ward & Cunningham	Repairs	69.63
	Thomas Somerville & Sons	Pipe	6.36
	D. W. Beveridge	Wire work	14.80
	William Lochte	Blacksmithing	13.50
	L. T. Walker's Sons	Cement	4.13
	Hutchinson Bros	Range lining	7.50
	G. A. Shallenberger, superintendent	Sundries	19.90
	C. A. Wells	Medical services	54.00
	M. Silverberg	Sundries	6.72
		Pay-roll, March	1,030.00
	W. K. Cohen	Compensation	25.00
	Philip Nicholas	do	25.00
	Louisa Johnson	do	7.50
	George P. Zurhorst	Conveyance	8.00
	J. E. Berry	do	12.00
	Allin R. Adams	Services	5.00
	William M. Galt & Co	Flour, etc	253.15
	B. R. Scannell	Meat	148.86
	R. A. Golden	Fish	14.60
	J. J. Hogan	Oysters	10.20
	Browning & Middleton	Groceries	135.80
	Beall & Baker	do	65.00
	James F. Oyster	Butter	69.42
	Tschiffely & Evans	Medicine	21.04
	Washington Gas-Light Company	Gas	59.00
	J. P. Agnew & Co	Coal	266.50
	Lansburg & Bro	Dry goods	71.44
	Guy Curran & Co	do	12.79
	Lewis Baer	do	1.62
	Woodward & Lothrop	do	10.00
	Augustus Thomas & Co	do	27.00
	B. J. Behrend & Son	do	9.28
	Eiseman Bros	Clothing	10.40
	Saks & Co	do	20.02
	William Ballantyne & Son	Stationery	44.70
	E. Morrison	do	4.55
	J. D. Milans	Printing	18.00
	Brown & McElfresh	do	9.00
	Johnson & Stokes	Seeds	52.72
	John A. Baker	do	11.73
	William H. Ernest	Flower-pots	19.50
	O'Neill Brothers	Blacksmithing	8.50
	Offie Anderson	do	10.60
	Columbia Railroad Company	Manure	120.12
	Washington Brick Machine Company	do	106.80
	W. B. Moses & Son	Furniture	127.35
	W. B. Williams	Carpets	145.03
	M. W. Beveridge	House ware	10.64
	F. P. May & Co	Hardware	10.70
	Thomas W. Smith	Lumber	50.50
	James L. Parsons	Repairs to bakery	39.50
	E. N. Gray & Co	Grate-bars	9.87
	George Ryneal, jr	Glass, oil, etc	18.50
	C. & P. Telephone	Rental, A. J. F. to Mch. 31, '89	15.00
	do	Rental, school, Mch. 31, '89	37.50
	J. E. Berry	Conveyance	12.00
	G. A. Shallenberger, superintendent	Sundries	20.50
	S. W. Curriden	Services three months	150.00
	J. L. Mott	Fire-brick	3.70
April		Pay-roll, month of April	1,028.00
	J. H. Slack	Compensation	25.00
	W. K. Cohen	do	25.00
	John Stevens	do	15.00
	L. Johnson	do	7.50
	Hume & Co	Groceries	100.82
	Schlegel & Quigley	Horses	400.00
May	G. A. Shallenberger	Sundries	17.74
	William M. Galt & Co	Flour	261.79
	Browning & Middleton	Groceries	173.27
	Hume & Co	do	41.04
	Beall & Baker	do	108.94
	J. F. Oyster	Butter	84.28

Receipts and disbursements of S. W. Curriden, etc.—Continued.

DISBURSEMENTS—Continued.

h.	Name.	For what expended.	Amount.
).			
	G. F. Swift & Co	Meat	$151.58
	R. A. Golden	Fish	13.50
	Washington Gas-Light Company	Gas	40.50
	J. P. Agnew & Co	Coal	102.50
	Woodward & Lothrop	Dry goods	75.18
	Lansburg & Bro	do	85.38
	Saks & Co	Clothing	7.95
	Eiseman Brothers	do	13.50
	B. J. Behrend & Son	Dry goods	6.90
	Guy Curran & Co	do	10.04
	B. Solomon	Hats	5.92
	Robert Cohen	Shoes	49.15
	W. L. King & Bro	Leather, etc	20.69
	F. P. May & Co	Hardware	20.78
	L. H. Schneider's Son	do	18.05
	M. W. Beveridge	Tableware	5.20
	William Ballantyne & Son	Books, etc	11.00
	J. D. Fres, jr	Stationery, etc	12.86
	George Ryneal, jr	Paint, etc	6.25
	G. Y. Hansell	Papering	30.00
	W. B. Williams	Carpet, etc	245.50
	John A. Baker	Seed, etc	24.04
	Samuel Wilson	Plants	13.00
	William H. Ernest	Flower-pots	32.25
	Offie Anderson	Blacksmithing	14.75
	J. W. Langdale	Rose-plants	105.00
	J. E. Berry	Conveyance	23.00
	Charles A. Wells	Medical services	78.00
		Pay-roll, month of June	1,008.00
	W. T. Hollis	Watch	11.25
	R. H. Stevens	Compensation	16.00
	John Stevens	do	20.00
	J. H. Slack	do	25.00
	W. K. Cohen	do	25.00
	Louisa A. Johnson	do	7.50
	William M. Galt & Co	Flour	264.07
	J. T. Varnell & Son	Meat	214.55
	R. A. Golden	Fish	13.60
	Beall & Baker	Groceries	42.35
	Browning & Middleton	do	160.96
	Hume & Co	do	173.11
	James F. Oyster	Butter	67.08
	Washington Gas-Light Company	Gas	31.50
	Tschiffely & Evans	Medicine	16.60
	Woodward & Lothrop	Dry goods	79.53
	Lansburg & Bro	do	28.90
	Guy Curran & Co	do	18.81
	B. J. Behrend & Son	do	8.40
	Eiseman Bros	Clothing	20.00
	C. H. Garden & Co	Hats	23.04
	Robert Carhen	Shoes	57.75
	W. L. King & Bro	Leather	30.23
	William Ballantyne & Son	Books, etc	17.83
	George Ryneal, jr	Paint	12.35
	E. N. Gray & Co	Repairing laundry boiler	74.76
	George White & Sons	Repairing steps	25.00
	S. S. Shedd & Bro	Gas-fixtures	4.80
	M. W. Beveridge	House-ware, etc	29.33
	W. H. Harrover	Stove, etc	25.15
	John A. Baker	Seed	9.13
	C. Strauss & Co	Plants	19.18
	G. A. Shallenberger	Sundries	22.89
	J. E. Berry	Conveyance	16.00
	D. Van Horn	Carpentering	12.50
		Pay-roll month of June	1,037.16
	Charles White	Compensation	10.00
	J. H. Slack	do	25.00
	R. H. Stephens	do	15.00
	Henry Logan	do	7.50
	W. K. Cohen	do	25.00
	John Stevens	do	20.00
	Emanuel Simms	Repairs	23.06
	Charles Chase	do	18.00
	G. A. Shallenberger	Sundries	25.24
	Thomas A. Smith	Lumber	44.86
	E. M. Willis	Ice	179.97
	William M. Galt & Co	Flour	253.53
	J. T. Varnell & Son	Meat	181.67

Receipts and disbursements of S. W. Curriden, etc.—Continued.

DISBURSEMENTS—Continued.

Month.	Name.	For what expended.	Amount.
1889.			
June	Browning & Middleton	Groceries	$97.80
	Beall & Baker	do	78.95
	Independent Ice Company	Ice	6.00
	C. C. Bryan	Groceries	27.55
	Tschiffely & Evan	Medicine	8.90
	Lansburg A Bro	Dry-goods	42.20
	Woodward & Lothrop	do	44.24
	B. J. Behrend & Son	do	10.55
	Eiseman Bros	Clothing	14.50
	Guy Curran & Co	do	17.09
	Auerbach & Bro	Hats	10.35
	Robert Cohen	Shoes	21.00
	Washington Gas-Light Company	Gas	22.00
	Columbia Railroad Company	Manure	80.06
	O'Neill Bros.	Blacksmithing	17.50
	Offie Anderson	do	13.75
	K. Kneessi & Son	Harness	57.40
	James K. Probey	Repairs to wagon	85.00
	J. McDermott & Bro	do	20.00
	Rider and Addison	Stationery	3.27
	J. D. Milans	Printing	10.50
	William Ballantyne & Son	Stationery	3.53
	George Watts & Son	Table-ware	12.79
	M. W. Beveridge	do	13.64
	F. P. May & Co	Hardware	15.75
	L. H. Schneider's Son	do	17.55
	Ward & Cunningham	Plumbing	63.90
	Melville Lindsay	Fire-hose	21.10
	W. H. Harrover	Stove, etc	20.70
	C. H. Dickson, agent	Gas governor rental	30.00
	J. T. Walker's Sons	Lime	5.36
	George N. Holland	Lime, etc	12.65
	James Anderson	Conveyance	4.00
	J. E. Berry	do	24.00
	Guy Curran & Co	Sundries	28.45
	C. Denekas	Yeast	20.20
	Washington Brick Machine Company	Manure	115.20
	Charles A. Wells	Medical services	68.00
	S. W. Curriden	Treasurer	150.00
	Louisa Johnson	Compensation	7.50
	James F. Oyster	Butter	75.65
	W. J. Holtman	Lard	8.21
	William Donnelly	Dental services	25.50
	Augustus Thomas & Co	Dry-goods	69.90
	W. L. King & Bro	Shoe-findings	2.04
	John A. Baker	Seed, etc	19.20
	George Ryneal, jr	Paint	13.90
	F. H. Young	Cleaning carpets	9.04
	George A. Green	Plumbing	17.00
	C. and P. Telephone Company	Rent to June 30	52.50
	William R. Riley	Dry-goods	1.83
	Hume & Co	Groceries	132.27
	Thomas Somerville & Sons	Hardware	3.05
	A. O. Brumnell	Repairing roofs	165.00
	N. Anderson	Rebuilding porch	64.00
	J. D. Free, jr	Stationery	8.91
	G. A. Shallenberger, superintendent	Sundries	3.55
	Andrew Barbour	Repairs	52.00
	I. C. Bassher & Co	Laundry boiler, etc	415.00
	Total disbursements		38,496.85

RECAPITULATION.

Total receipts	$38,596.00
Total disbursements	38,496.85
Leaving an unexpended balance of	99.15

Buildings and Grounds Account.

For two brick water-closets:		
Appropriated		$1,200.00
Disbursed:		
Notley Anderson, contract for buildings		998.00
Leaving unexpended		202.00
For addition to hog-pen:		
Appropriated		150.00
Disbursed:		
Thomas W. Smith, lumber	$53.48	
James L. Parsons, labor, carpentering	72.00	
T. W. Smith, lumber	11.76	
		137.24
Leaving unexpended		12.76
For grading, draining, and improving grounds:		
Appropriated		300.00
Disbursed:		
George Gilbert, labor, paving	$18.00	
Isaiah Dean, labor, paving	29.25	
Charles Stewart, labor, paving	29.25	
Andrew Barbour, mason-work	24.75	
Henry Logan, labor	18.00	
George Gilbert, labor	18.00	
Andrew Barbour, mason-work	29.25	
George Gilbert, labor	18.00	
H. Burkhardt, paving-stone	11.50	
Isaiah Dean, paving	33.00	
Charles Stewart, paving	36.00	
Thomas Somerville & Son, pipe	20.40	
		285.40
Leaving unexpended		14.60
For boiler-house, boilers, piping, and connections:		
Appropriated		4,000.00
Disbursed:		
James Hughes, raising smokestack	$170.00	
Evening Star Newspaper Co., advertising for proposals	5.63	
The Washington Post, advertising for proposals	6.38	
J. L. Parsons, frame boiler-house	200.00	
T. C. Bassher & Co, water-service pipes	154.00	
T. C. Bassher & Co., boilers, piping, and connections	2,996.00	
J. H. McGill, fire-brick	14.60	
Andrew Barbour, mason-work	18.00	
T. W. Smith, lumber	11.76	
		3,576.46
Leaving unexpended		423.54

Report of the physician.

REFORM SCHOOL OF THE DISTRICT OF COLUMBIA,
Washington, D. C., July 1, 1889.

TLEMEN: I am glad to report (for the second consecutive year) ere has been no death at the institution. We had eight cases of l fever, commencing August 20. The last fever patient was not ged from the hospital until the 31st of October. There must rily be many cases of illness from various causes among so many s. A very large percentage of the boys admitted come with in- disease or with systems impaired by vicious habits or irregular of living. To such our comfortable dormitories, generous food, ular habits are of inestimable value. Strict watch has been er dormitories, bathing pools, and closets, disinfectants have been atically and liberally used, while scrupulous cleanliness and h ventilation contribute to maintain the healthful condition of iates.

ng those matters important for the comfort and health of the the present arrangement of our "outside closets." Waiting in

line there in all conditions of the weather brings many cases to the dispensary. I would respectfully suggest that outside closets similar to those in use at the new building be built for the other families.

I regard it as important that the heating apparatus for Family A building be improved at once. I am in the habit of leaving boys who are likely to be detained in bed only a few hours in the dormitory, and I know that great discomfort is often felt because of the unreliable method of heating the building. A still further recommendation is that some system of drainage (to include all three buildings and the grounds) be devised and executed in such manner that there would be no probable interruption in the near future. The play-ground should be so drained and arranged that the boys could use it except in the most inclement and boisterous weather.

I have learned with pleasure that your Board contemplates being represented at the International Prison Congress to be held at St. Petersburg the coming June, when the subject of reformatories will likely occupy an important place in the deliberations. I would be glad to have my department receive some attention in this case, and will be pleased to render such personal and professional assistance as will contribute to this end.

Very truly, yours,

CHAS. A. WELLS, M. D.,
Attending Physician.

The BOARD OF TRUSTEES
OF REFORM SCHOOL, DISTRICT OF COLUMBIA.

REFORM SCHOOL OF THE DISTRICT OF COLUMBIA,
Washington, D. C., September 16, 1889.

GENTLEMEN: Pursuant to the resolution adopted the 29th day of August, the undersigned committe, appointed to visit the House of Refuge at Philadelphia, Pa., and at Randall's Island, New York, have the honor to submit the following report, after having thoroughly examined into the workings of those institutions.

At the House of Refuge, Philadelphia, the principal industries are brush-making, tailoring, shoe-making, and caning chairs.

The population of this institution on the day we were there was 650 boys and 170 girls.

The salaries paid amount to $32,000 per annum.

The salary of the superintendent is $3,000 per annum, and the superintendents of the shops from $1,000 to $1,200 per annum.

The teachers receive on an average $30 per month, but are not employed in any other capacity and teach three hours per day five days during the week.

An officer is employed in this institution, designated as an agent, who receives a salary of $1,500 per annum, whose duty it is to find homes for discharged boys and to visit them at their homes at least once a month.

Under the laws of the State of Pennsylvania, the institution has control over its inmates until they are twenty-one years of age, and if their homes are found at any time to be improper or if they are liable to be led astray or are not doing well, they can at any time be recalled to the institution.

A similar law, we are informed, applies to nearly every institution of a like character throughout the United States, with the exception of

form School of the District of Columbia, and although the at-
of Congress was called to this matter and a bill introduced at
session giving our school this authority, it failed to become a

r leaving Philadelphia, your committee proceeded to the House
nge at Randall's Island, New York.
population of this institution on the day your committee arrived
was 579 boys and 85 girls.
institution employs 72 officers and employés, including 20 teach-

salary of the superintendent is $3,500 and the salary of the
pal teacher is $2,000 per annum, and the salaries of the assistant
rs average from $600 to $800 per annum. They are employed, in
ng and other occupations, from seven to eight hours per day.
State appropriates about $120,000 per annum, and the proceeds
the work of the inmates average $20,000 per annum; making a
of about $140,000 per annum, to be expended for the current ex-
ses of the institution.
ach of the institutions that we visited had a fine band, made up
the inmates, which was not only a great addition to the institution,
a great advantage to the boys composing the band, as the commit-
was informed that these boys had no difficulty in obtaining lucra-
employment in the line of their calling after leaving the institu-
. We respectfully recommend that a band be also attached to our
ool—the instruments can be purchased at an expense not to exceed
0, and an instructor can be obtained at a compensation of $600 per
um.
he House of Refuge at Philadelphia, after an experience of many
rs, has finally come to the conclusion that bars and bolts, high fences,
e walls, and cells are things that belong to the past and have no
in the reformation of juveniles.
hey are about to abandon their present location, and they have pur-
sed a farm of 400 acres, about twenty miles from the city of Phila-
hia, paying therefor $52,000, and there has been appropriated for
erection of the necessary buildings the sum of $750,000, making a
of over $800,000 expended or to be expended by the State of
nsylvania upon this one institution for the reformation of boys and
s.
fter careful examination we find the industries of these schools to
similar to those of our own.
conferring with the superintendents of these institutions, they
ngly advised that as little machinery as possible be used and that
trades be taught which require the use of much machinery, for the
son that when the inmates leave the institution they have no machin-
of their own and must depend upon their own hands. Therefore
y should be taught to work with their hands, without the aid of
hinery. Of course *some* machinery is necessary.
n some institutions bricklaying, plastering, and carpentering is
ght to a large extent. Practical mechanics are employed in daily
hing boys by building temporary houses and structures, and then
ing them down and rebuilding others of a different character, using
same material over and over.
is true that in this work there is no pecuniary profit but reform
ools are not established for the purpose of making money, but for
education and benefit of the inmates, to enable them to be self-
porting when they go out into the world.

After giving the matter careful consideration, your committee respectfully recommends that as large a class of boys as possible be employed in making shoes and clothing for the school. It is thought possible that the school can obtain work from large clothing establishments in this city and in Baltimore, and it might be worth trying.

All the shoes needed at the school can be and should be made upon the premises.

Caning chairs is an occupation only, and not a trade. The boys can be employed at it, and a small revenue derived from it, but it is of little use to the boys when they leave the school.

In addition to these, the most inexpensive industries that can be established would be bricklaying, plastering, and carpentering. These trades could be readily taught in the manner above suggested, and would be most useful callings for the boys.

The carpentering would also be of great advantage to the school, as the boys engaged in this work, being proficient in it, could do all the carpentering which will be required at the school, which would in the end amount to a great deal and save a large sum of money which is now expended.

The boys engaged in bricklaying could also be of use in making culverts, drains, and other work upon the premises, and the boys learning the trade of plastering could also be made useful.

It was the wish of your committee to have made some further inquiries at some other points, but their time was limited and the weather bad and disagreeable.

Very respectfully,

CECIL CLAY.
A. J. FALLS.

The BOARD OF TRUSTEES OF THE REFORM SCHOOL OF THE DISTRICT OF COLUMBIA.
Washington, D. C.

EXHIBIT N.—*Report of the warden of the jail in the District of Columbia.*

WARDEN'S OFFICE, UNITED STATES JAIL,
Washington, D. C., November 1, 1889.

SIR: I have the honor to submit the following report of this institution for the year which ended October 31, 1889:

The sanitary condition of the institution and the health of the inmates have been of the highest order. One death occurred, which was the first in three years; that was a case of consumption, with which the prisoner was prostrated when he entered the prison. The jail is located in a malarious district, and in order to protect the prisoners from the effects of the malarial poison it is necessary to constantly use disinfectants to purify the atmosphere within the building. To this end lime, in the form of whitewash on the walls of the cells and corridors, is frequently applied. Carbolic disinfecting powder is frequently sprinkled about the sinks, basements, and corridors, and along the cold-air ducts that lead into and under the first floor of the wings of the building; and crude carbolic acid, with equal parts of water heated just sufficiently to create a light vapor, is constantly used in different parts of the building. We have found by long practice and close observation that the crude carbolic acid in the form of vapor

most efficient annihilator of the germs of malarial poison now in
We have used it with great freedom and persistency during a
l of ten years, with most satisfactory results. During that period
ımates have been comparatively free from the various forms of
, catarrh, and colds, although previous to its introduction and
ere these diseases were of frequent occurrence. Methods to pro-
a condition of cleanliness among the inmates and throughout
partments are in constant practice and the accumulation of foul
xtraneous matter prevented. Many of the prisoners, however,
brought here are the subjects of various forms of disease arising
their vicious habits of life. Hence the jail physician is always
ied with a number of patients for treatment. Such persons, as a
ıre in better condition when released from jail than when they
d it. The report of Alexander McWilliams, M. D., the jail phy-
, which accompanies this, contains a detailed and specific state-
of the sanitary condition of the prison, the health of the in-
, the treatment of the sick, the diet of the prisoners, and their
al condition. Reference thereto is hereby respectfully made for
r and more ample information upon those subjects. There was
ded for medicines, dentistry, medical stores, hospital appliances
ıstruments, and special diet for those under medical treatment
ım of $208.52. There was also expended for disinfectants, includ-
ırbolic powder, crude carbolic acid, sal soda, soap, and lime, the
f $483.79.

amendable efforts have been made to improve the moral condition
inmates by representatives from the Young Men's Christian As-
ion, white and colored, the Catholic societies, and the Women's
tian Temperance Union, some of whom have held meetings at the
ery Sunday; besides they have visited the prisoners at stated in-
s for religious conversation and distributing reading matter of a
ns and moral character, and in these ways have produced gratify-
sults. Their services have been gratuitous and rendered the em-
ent of a chaplain unnecessary. The jail building and out-building
been kept in good repair at a cost of $189.25. The repairs included
g up a window space, 7 feet by 24 feet, in the outer wall of the
wing with solid masonry of brick and cement to render that
ty more secure; also placing a new roof on part of the barn and
ing the cupola or lantern and roof over the central part of the jail
ng. Repairs have been made to the furnaces and steam-boilers,
eam-pipes, fittings, and machinery connected with the steam-heating
gements, the laundry, and the sewers, as their condition required.
mount expended for such repairs was $309.83. These are all now in
condition for use, except an upright steam-boiler, which is used
nerating steam to work the force-pump that forces water to the
in the upper part of the building to supply the jail with water, also
the engine in the steam laundry, and for cooking and other pur-
This boiler has been in constant use fourteen years, and has become
rn as to be deemed unsafe and unfit for further use. The inspector
am-boilers in this District, after making a careful inspection of the
, condemned it as unsafe, and advised that it be replaced by a hor-
l steam-boiler of about 25-horse power. I recommend that a
of that description and capacity be purchased to replace the one
n use at as early a day as arrangements can be made for its pur-
Should an accident occur to the one that has been condemned,
o located in the central part of the basement that it would jeopar-
he building and the lives of the inmates. The cost of a new boiler

of the kind mentioned is estimated at about $550. There has been expended for paints, oil, glass, and other material for painting and glazing, and for lubricating oil for mechanical purposes, the sum of $270.45.

The painting and glazing were done by prison labor, as it became necessary from time to time, upon the cupola, the valleys to the central roof, the large gutters under the eaves, the window frames and sash, on the iron and wood-work in various parts of the jail, and on the cell furniture and other articles requiring the same.

An apartment to be used for storing vegetables and other perishable articles is very much needed. We now have but one small room used for the purposes of a cellar, and in this are stored fish, salt, salt provisions, vegetables, and most of the articles used for dietary purposes. The room is situated on the south side of the east extension of the building, where it is exposed to the heat of the sun and heat from two steam-pipes which pass through it to the laundry and kitchen, and which increase the temperature of the apartments to such a degree that articles of a perishable nature decay more rapidly, occasioning loss and rendering it advisable to purchase supplies in small quantities. The room now in use for the purposes of the steam-laundry and drier if vacated could be used for an additional cellar, for which it is admirably suited in all respects. There is an ample space in the basement, which can be spared without inconvenience, on the west side of the fire-room, where the laundry and drier can be placed and set up 75 feet nearer the steam-boilers which furnish the steam-power to run them than where they are now situated, which if done would save considerable in the quantity of steam for their use. In order to make the change it would become necessary to build a brick wall 75 feet in length and 10 feet in height to separate the space to be used for the laundry and drier from the fire-room, also to pave the floor to be used for the purpose, and to add to and change somewhat the system of steam-pipes and sewers now in use. The entire cost of making the change and including the removal of the engine, boilers, tubs, and apparatus connected with the laundry and drier is estimated at $500. Believing that in course of time this would be a saving to the Government, I recommend that the change be made. A small-pox hospital, which is under the control of the District government, is situated upon the jail premises, and its approaches are over grounds belonging to the jail and used for jail purposes. It is in such close proximity to the jail building that when it is occupied by small-pox patients there is danger that the disease may be communicated to the inmates of the jail, which has been done on two or three occasions heretofore with a loss of three of the patients. The hospital is not an attractive feature of architecture nor ample in its accommodations. It has been often criticised heretofore, and, as I am informed, condemned by those having the matter in charge as unfit for use. It does seem to me quite probable that, by a well-directed effort to be made by the proper authorities, Congress could be induced to make the small appropriation that would be necessary to purchase a site in a suitable locality and erect thereon a building with suitable apartments and arrangements to accommodate in a proper manner such persons in this District as become subject to that much-dreaded and dangerous disease and thus contribute to their comfort and recovery. If this were to be done, the liability to contract the disease by prisoners held in custody by the Government would be materially lessened. It is to be hoped that the proper authorities having it in charge may take early action for its removal.

Perhaps I may be excusable for mentioning in this connection another

-needed improvement, although the subject has been treated on in r reports, and that is the construction of a wall or inclosure of ble extent and dimensions around the jail and a portion of the jail ises. It is rare indeed that a jail or prison can be found in any on of the country that is not provided with some protection of that . And yet this jail has been entirely neglected in that regard. It cated upon the borders of the extreme limits of the city, near the s of the Anacostia River, beyond the settled population of the and the protection which the presence of a police force might afford, ne of the most isolated portions within the city limits, where it is sed to the intrusion of vicious and evil-disposed persons, who prowl nd the premises, especially at night, for evil purposes, and who can roach with impunity to the very walls, doors, and windows of the itution, where they can communicate with prisoners, especially women and persons held as witnesses, whose windows are in the er wall of the building. Nothing is safe upon the premises that they get away with or contaminate. A wall is not only necessary for more complete protection of the building and property and greater rity of the prisoners, but also to provide a suitable yard for giving inmates an opportunity to exercise in the open air. The present angements afford no such opportunity. At present the institution is cessarily self-reliant, and depends for security and protection entirely on the strength of the building and the efficiency of the officers in arge. Such a dependence can not be relied on at all times. The cost of suitable inclosure would depend upon the plan, dimensions, and also terial to be adopted for its construction, and therefore can not now be timated by me. I trust, however, that the attention of Congress will called to this matter, and that proper efforts will be made to obtain appropriation and suitable provisions for this improvement. In the ean time another guard, in addition to the present force, should be pro-ded to do outside duty at night around the jail and jail premises. his I most respectfully recommend to be done, believing, as I do, that part of the present force can with propriety be withdrawn from side duty and detailed for such purpose.

One hundred and twenty-two convicts have been transported from the il to the Albany county penitentiary, at Albany, in the State of New ork. The actual expenditure connected with their transportation was 2,249.55. Last year the number of convicts so transported was 83; an cess of this year's number over that of last year of 39. The amount of ie salaries of guards and other subordinate officers and employés was 23,700, or about the same as last year. A telephone has been in use the jail at a cost of $108, and a box at the city post-office at a cost $16.

The other expenses of the institution were as follows:

bsistence	$8,693.12
ds, bedding, and clothing	1,922.08
el	2,467.99
s and lights	593.97
e	127.38
ooms, whitewash, flue and scrub brushes	39.00
ank books, stationery, and advertising	154.05
epairs of wagon and harness and feed	193.05
d cots, cell and other furniture	132.45
ardware, tinware, and dishes	239.65
echanical and working tools	60.15
reparing for execution and services of undertaker	44.00

The above expenses do not vary materially from last year, but are a ittle less in the aggregate.

The total number of prisoners confined in jail during the year was 2,260. The highest number in jail on the same day was 234 and the lowest 173. The daily average was 208. At the beginning of the year there were in jail 211. There were committed during the year 2,049; discharged, 2,040; leaving in jail at the close of the year 220. The convicts transferred to the penitentiary consisted of 15 white males, 1 white female; 99 colored males, 7 colored females. One colored male was executed for the crime of murder. The number sentenced to serve terms in jail was 1,198. Of these 167 were white males, 7 were white females; 845 were colored males, and 179 were colored females. The crimes of which those sent to the penitentiary were convicted were as follows:

Offense.	White males.	Colored males.	White females.	Colored females.	Total.
Murder		1		1	2
Manslaughter	1	8			9
Arson		1			1
Forgery	1				1
House-breaking	6	40			46
Grand larceny	3	13		3	19
Larceny from the person	1	10	1		12
Robbery	1	1			2
Receiving stolen goods		1			1
Embezzlement		1			1
False pretense	1	2			3
Horse-stealing		1			1
Attempt to rape		4			4
Assault with intent to kill		11		1	12
Violating postal laws	1				1
Resisting Metropolitan police officer		1			1
Bigamy		2			2
Perjury		2		2	4
Total	15	99	1	7	122

Those sentenced to jail were convicted of crimes, and classified as follows:

Offense.	White males.	Colored. males.	White females.	Colored females.	Total.
Grand larceny		1			1
Forgery	1				1
Petit larceny	64	284	4	60	412
Embezzlement	2				2
Larceny from person		1		1	2
Housebreaking		3			3
Violating Revised Statutes United States		1			1
Keeping policy-shop	1	2			3
Keeping gambling-table		3			3
Assault with intent to kill	1				1
Violating gaming laws		1			1
Assault on Metropolitan Police officer		1			1
Assault and battery	71	430		77	578
Assault	2	7			9
An affray	13	82		28	123
Receiving stolen goods		1		2	3
Keeping disorderly house	3		2	5	10
Keeping bawdy-house			1	1	2
Threats	8	13			21
Contempt of court		4		3	7
Carrying concealed weapons	1				1
Malicious trespass		7			7
Violating dog-tax law		4			4
Violating humane laws				2	2
Total	67	845	7	79	1,198

committed during the year 399 were white males, 21 were les, 1,378 were colored males, and 231 were colored females. undred and ninety-two were native-born citizens, and 57 eign birth. Ninety-seven of the white males were married re unmarried. Five of the white females were married and married. Of the colored males 303 were married and 1,075 rried. Forty-six of the colored females were married and 185 rried.

ises charged against the persons committed to jail during ere as follows:

Offense.	White males.	Colored males.	White females.	Colored females.	Total.
	3	9		3	15
tent to kill	30	45		1	76
tery	87	470	4	68	629
politan Police officer		3			3
	22	83		1	106
	31	50	3	11	95
	6			1	7
	1	10			11
	17	7			24
	15	3	1		19
rson	7	23			30
etit larceny		1			1
goods	3	7		6	16
	100	409	7	76	592
		9		9	18
	1	1			2
		3			3
laws	1				1
	1	9			10
	13	28		4	45
ng-table		5			5
shop	1	5			6
ass	1	6			7
ace	10	17		1	28
	15	95		26	136
rly house	1	1	2	8	12
g laws		1			1
ale		1			1
rt		5		3	8
sed bar		1			1
r orders of court	1				1
		3			3
house			2	1	3
e United States				4	4
		1			1
	12	4			16
led weapons	3	1			4
x laws		4			4
	16	78	2	8	104
itness	1				1
	399	1,398	21	231	2,049

y, I desire to express my high appreciation of the assistance r Benton Russ, the deputy warden, in maintaining a satisfac- ion of the institution, of the services rendered by the jail d his successful treatment of the sick, and of the services of nate officers generally for the good discipline that has pre-

respectfully, your obedient servant,

JOHN S. CROCKER,
Warden.

H. H. MILLER,
Attorney-General.

HOSPITAL DEPARTMENT, UNITED STATES JAIL,
Washington, D. C., November 1, 1889.

SIR: We have to record but one death from natural cause during the past year. This was the case of a man charged with murder, who was in the last stage of consumption. Everything that our limited accommodations would allow was done to alleviate his suffering and restore him to health. We have had during the past year an unusually large number of cases of dysentery and diarrhea (some of quite a serious character). Upon investigation I found that nearly every case was among those who had recently entered the prison, while those who were serving out long sentences were exempt. At first I feared it might be owing to the water, but on examination I found that was not the fact, thus showing that the sanitary condition of the jail was not the cause. It is greatly to be regretted that we are unable to make use of the hospitals at the jail, both large, well-ventilated and heated rooms, but, in the exposed and unprotected condition of the building, to place a prisoner there would be equivalent to giving him permission to leave. I had some fear of diphtheria in the summer, one case occurring in a newly-committed prisoner. It terminated favorably, however, and no other, case was reported. I have previously called your attention to the singular fact of the few cases of delirium tremens that have been reported at the jail. Heretofore it has been the most frequent form of disease the jail physician has been called on to treat. This year not one case has been reported. The food furnished is of an excellent quality and abundant; but few complain of not receiving enough, and as soon as the complaint is heard the want is supplied. The sanitary condition of the jail is all that can be desired. Those reporting at sick-call are malingerers or those who are suffering from the class of diseases common among the inmates of prisons.

The attempt to make the jail an asylum for the insane was made the subject of a special report to you during the last year, showing the utter impossibility of such an attempt; the few cases of the kind we had were of a serious nature and source of unending trouble.

I return to you my sincere thanks for the kindness and valuable assistance you have accorded me.

Respectfully yours,

A. MCWILLIAMS,
Physician, United States Jail, District of Columbia.

General JOHN S. CROCKER,
Warden United States Jail.

EXHIBIT O.—*Report of the Architect of the Capitol.*

ARCHITECT'S OFFICE, UNITED STATES CAPITOL,
Washington, D. C., September 12, 1889.

SIR: Relating to the improvements and repairs made at the court-house in the city of Washington, D. C., during the last fiscal year, I have the honor to report that the coal-vaults, authorized by the act of October 2, 1888, have been completed.

Sundry repairs to the plumbing and painting have also been made during that period, so that now the interior of the building is in good condition.

Congress, at the last session, failed to make provision for repairing

and painting the exterior of the building. These improvements are needed to preserve the building from further injury, as well as to improve its appearance.

For the reasons given in my letter to your Department, dated October 8, 1888, I beg to renew the recommendations for this work.

The estimated cost of painting and repairing the exterior of the building as recommended is $2,500.

The estimated cost of the annual repairs to the building for the next fiscal year is $1,000.

I have the honor to be, your obedient servant,

EDWARD CLARK,
Architect United States Capitol.

Hon. W. H. H. MILLER,
Attorney-General, Washington, D. C.

EXHIBIT P.—*Report of the Clerk of Pardons.*

DEPARTMENT OF JUSTICE,
Washington, D. C., November 16, 1889.

SIR: I have the honor to submit herewith a list of the persons convicted in the United States district courts who were pardoned during the fiscal year ending June 30, 1889, together with a tabular statement showing the districts in which they were tried, the terms of court at which they were convicted, their offenses, sentences, when they were pardoned, and the principal reasons for recommending the exercise of executive clemency in their respective cases.

Very respectfully,

C. F. SCOTT,
Clerk of Pardons.

The ATTORNEY-GENERAL.

Names.	Districts.	When convicted.	Offenses and sentences.	When pardoned.	Reasons for the exercise of executive clemency.
				1888.	
Joseph E. Kavanaugh..	Pennsylvania, eastern ..	May term, 1888.	Violating section 5474, Revised Statutes, postal laws.—3 months' imprisonment and $10 fine.	July 12	Upon the recommendation of all officials connected in any way with the prosecution. Offense purely technical, entailing no loss. Punishment sufficient in interest of the public service.
William P. McKee.....	North Carolina, western.	... do	Violating section 5478, Revised Statutes.—2 years' imprisonment at hard labor.	...do	Sentence commuted to eight months' imprisonment in county jail in deference to representations of the district attorney, the jury, and numerous good citizens asking clemency.
William R. Smith.....	Utah	Feb. term, 1888...	Unlawful cohabitation.—6 months' imprisonment and $300 fine.	July 20	Because he has paid the fine imposed; has served nearly four of the six months' imprisonment to which he was sentenced.
George Christian	Arkansas, western.....	Sept. term, 1887...	Assault with intent to kill.—2 years' imprisonment.	...do	Because he was weak-minded and committed the offense in such manner as raises no presumption that it was done with intent to kill.
Frank Walker.....	.....do	... do	Violation of the internal-revenue laws.—18 months' imprisonment.	...do	Because the ten months' imprisonment already served seemed a very severe punishment for the crime committed.
John Miller.....	Wisconsin, eastern	Oct. term, 1886....	Violating section 5478, Revised Statutes.—2 years and 6 months' imprisonment at hard labor.	...do	Upon the recommendation of the judge and district attorney, a large number of petitioners, and upon the fact represented that his widowed mother is poor and needs his services.
Erick Ludvickson.....	Utah	.....	Polygamous practices	...do	Because the application was in conformity with the statute.
Frank Wicks.....	District of Columbia....	Feb. term, 1888....	Assault with intent to kill.—6 months' imprisonment.	...do	Because at date of August 1, 1888, when it takes effect, the convict will have been imprisoned five months, which, in view of his previous good character, is sufficient punishment.
Harry Parker.....	Montana.....	May term, 1886 ...	Counterfeiting.—3 years' imprisonment.	...do	Upon the recommendation of the district attorney, and because, if not entirely innocent of any crime, two years and two months' imprisonment already suffered is sufficient punishment for the part he took in the crime committed.
John A. Cisson	South Carolina	Aug. term, 1887...	Violation of the internal-revenue laws.—12 months' imprisonment and $300 fine.	.. do	Because he has served more than three-fourths of his term, and is represented as having a large family and as being poor, and has imparted valuable information concerning other violations.
James C. Sisson.....	.....do	....do	.....do	...do	Do.
Frank Owig	Ohio, northern	Dec. term, 1887...	Violation of the internal-revenue laws.—Sentence suspended.	...do	Sentence commuted as to imprisonment. Punishment by fine left to the court.
John Johnson	Maryland.....	June term, 1888...	Obstructing and resisting United States officer.—60 days' imprisonment and $100 fine.	July 23	Sentence of imprisonment remitted. Pardon conditioned on payment of fine.
James Campbell.....	.....do	....do	Obstructing and resisting United States officer.—60 days' imprisonment.	...do	Unconditionally pardoned. No reasons assigned.

Levi Fralick	New York, northern	Nov. term, 1878	Misdemeanor—2 years' imprisonment.	Sept. 10	To restore him to citizenship.
Frank P. Harper	North Carolina, eastern	Apr. term, 1888	Illicit distilling.—17 months' imprisonment.	Sept. 15	No reason assigned.
Robert Harper	do	do	Illicit distilling.—18 months' imprisonment.	do	Do.
Emanuel Patterson	Arkansas, western		Murder	Sept. 13	Sentence commuted to imprisonment for life, the evidence not being of that satisfactory character that would justify the infliction of the death penalty.
Theo. Bonta	Kentucky	Jan. term, 1885	Counterfeiting.—5 years' imprisonment.	Sept. 17	Since imprisonment has lost a hand by accident, reported as in last stages of consumption, sentence expires in a few months, and his aged parents being in deep distress.
William F. Dean	District of Columbia	Dec. term, 1887	Assault.—1 years' imprisonment.	do	Sentence a severe one. Former character good. Has been imprisoned nearly 10 months, and the district attorney recommends his pardon.
Charles Gatfiff	Texas, western	Feb. term, 1881	Robbing United States mail.—Imprisonment for life.	do	Besides having now served more than 7 years in prison, his good conduct and devotion to self-improvement, mentally and morally, leaves no doubt of his being a good citizen hereafter.
William Mays	Idaho	Jan. term, 1880	Mail robbery.—Imprisonment for life.	do	Sentence commuted to 10 years' actual imprisonment with no deduction for good conduct.
Christian Maisak	District of Columbia	June term, 1869		do	No reason assigned.
Peter Grayson	Arkansas, western	Nov. term, 1877	Murder.—To be hanged June 21, 1888; commuted to imprisonment for life, June 15, 1888.	do	Upon the recommendation of the judge who sentenced him and the district attorney who tried him.
W. Frank Hubbard	North Carolina, western	Apr. term, 1888	Obstructing an officer while in the discharge of his duty.—12 months' hard labor in penitentiary at Columbus, Ohio; $300 fine and costs.	do	Because of the critical condition of health, and on recommendation of judge, district attorney, and marshal.
George Wafford	Arkansas, western	Feb. term, 1886	Assault with intent to kill.—5 years' imprisonment.	do	Upon letters and papers presented, accompanied by the recommendation of the court and district attorney.
John A. Wilson	New Jersey	Mar. term, 1887	Sending obscene literature through the mails.—2 years' imprisonment and fine of $500.	do	
James Burnett	Arkansas, western		Larceny.—Sentence served.	Sept. 25	For the purpose of relieving of legal disabilities.
George C. Parkinson	Idaho		Detaining a United States officer.—1 years' imprisonment.	Sept. 26	For the purpose of restoring rights of citizenship.
Charles W. Hitchcock	Maryland	Mar. term, 1886	Violation of postal laws.—3 years' imprisonment, Maryland penitentiary	do	For the purpose of restoring his citizenship.
George S. Treadway	Alabama, northern	Oct. term, 1887	Abstracting registered letters, confinement in Louisville reformatory, Louisville, Ky.	do	No reason assigned.
P. J. Tally	Georgia, northern	Mar. term, 1888	Violation of the internal-revenue laws.—4 months' imprisonment, $100 fine and costs.	do	The term of imprisonment almost expired and utterly unable to pay the fine.

Names.	Districts.	When convicted.	Offenses and sentences.	When pardoned.	Reasons for the exercise of executive clemency.
				1888.	
John Squires	Utah	May term, 1888	Unlawful cohabitation.—Imprisonment for 6 months, $300 fine and costs.	Sept. 29	Upon the recommendation of district attorney and marshal, and many citizens.
John P. Gouldman	Virginia, eastern	Mar. term, 1876	Violation of postal laws.—6 months' imprisonment, $250 fine and costs.	Oct. 1	For the purpose of restoring to citizenship.
Harry Smith	District of Columbia	June term, 1887	Grand larceny.—2 years' imprisonment.	Oct. 26	That he may be immediately removed to his home in Louisiana.
Joel E. Bowman	Virginia, western	Apr. term, 1888	Violation of the internal-revenue laws.—Sentence suspended.	Oct. 30	Because he is a cripple; no willful criminal intent involved in the offense, and upon the recommendation of the judge and district attorney.
Christian Madren	Utah		Polygamous practices	Nov. 1	Upon compliance with the statute of the United States.
Lewis Larren	do		do	do	Do.
William Frazier	Arkansas, western	Aug. term, 1888	Assault with intent to kill.—Sentence suspended.	Oct. 30	Upon the recommendation of the judge and district attorney, and because of the desperate wounds received at time of arrest, which unfit him for imprisonment.
Frank Cagle	Arkansas, western	Mar. term, 1888	Illicit distilling.—12 months' imprisonment.	do	Has served about two-thirds of his time, and longer confinement may endanger his life.
Felix Maness	Arkansas, eastern	Apr. term, 1888	Violation of the internal-revenue laws.—6 months' imprisonment; sentence suspended for 6 months.	do	The offense was slight, prisoner ignorant, and well behaved prior thereto, and upon recommendation of district attorney. Sentence suspended for application for pardon.
Mee Kaw (Indian boy)	Kansas	Sept. term, 1888	Grand larceny.—1 year's imprisonment.	do	Has been in custody five months; can not speak a word of English, and no good purpose to be served by keeping him longer in prison.
Kirkland M. Fitch	Ohio, northern	Oct. term, 1883	Embezzling funds of Second National Bank.—5 years' imprisonment.	do	For the purpose of restoring to right of citizenship.
Elmore Field	Colorado	June term, 1888	Larceny.—1 year's imprisonment.	do	Upon recommendation of the judge and district attorney; and because sufficiently punished.
Stephen P. Mirsam	United States consular court, Alexandria, Egypt.	June 12, 1880	Murder.—To be hanged October 1, 1880; afterwards commuted to life imprisonment; and again commuted to imprisonment of 15 years, with allowance for good behavior.	Nov. 1	Because the punishment appears to be seriously affecting his mind (he is now within the jurisdiction at the Albany County penitentiary) and because of an unwillingness to permit a life sentence to be executed upon a prisoner condemned by a single magistrate.
A. S. Mariner	Tennessee, eastern	Jan. term, 1886	Rifling registered letters and using their contents.—5 years' imprisonment.	Nov. 1	Because his family is represented to be actually suffering, and because he was a brave soldier during the war, and the imprisonment already suffered has accomplished the end of punishment.
Allen Nixon	General court-martial			Nov. 6	
Loomis Willard	New York, northern	Nov. term, 1884	Violation of the internal-revenue laws.—14 months' imprisonment and $25 fine.	Nov. 15	

					ages surrounding the offense, [illegible] rant commutation to imprisonment for life.
W. T. Ellington	Kentucky	Oct. term, 1888	Violation of the internal-revenue laws.—6 months' imprisonment and $100 fine.	Dec. 7	Upon the recommendation of the district attorney.
Richard Brannon	Texas, western	Feb. term, 1885	Mail robbery.—Imprisonment for life.	...do	The facts presented, and the opinion expressed by the district attorney to the effect that the convict may be innocent, induce the fear that it is a case of mistaken identity.
W. C. Jordan	South Carolina	July term, 1888	Selling liquor without a license.—6 months in jail and $100 fine.	...do	Upon the grounds that he has served nearly the entire time of his sentence, the further ground of the precarious condition of his health, and upon the recommendation of the judge and district attorney.
Noah Westmoreland	Arkansas, western	Aug. term, 1888	Assault with intent to kill.—Sentence suspended.	.. do	Upon the recommendation of the district attorney and Attorney-General.
Charles Slater	Virginia, western	Oct. term, 1887	Violation of the internal-revenue laws.—Sentence suspended, etc.	...do	Upon the recommendation of the judge and district attorney.
Fred. Miller	New York, northern	Mar. term, 1887	Violation of postal laws.—3 years' imprisonment.	...do	Sentence commuted to two years' actual imprisonment.
Joseph H. Gibler	Illinois				
F. C. Boyer	Utah	Sept. term, 1888	Unlawful cohabitation.—60 days' imprisonment, $200 fine and costs.	Dec. 7	
Pleasant Williams	District of Columbia		Remission of forfeited recognizance.	...do	
Richard Halligan	Ohio, southern	Apr. term, 1886	Counterfeiting.—6 years in the penitentiary and $100 fine.	...do	Commuted to three years' imprisonment upon recommendation of the district attorney.
David H. Martin	Virginia, western	Nov. term, 1888	Violation of the internal-revenue laws.—30 days in jail and $100 fine.	Dec. 21	Term of imprisonment expired and on the recommendation of the district attorney.
Benjamin Hopkins	Ohio, southern	Feb. term, 1888	Embezzling and misapplying the funds of a national bank.—7 years and 10 months' imprisonment.	...do	In order that he may spend his few remaining days at home with friends.
John S. Sullivan	District of Columbia	June term, 1888	Manslaughter.—1 year's imprisonment and $50 fine. Sentence suspended.	Dec. 24	
Max Bundler	New York, southern	Oct. term, 1888	Smuggling.—11 months' imprisonment and $100 fine; sentence commuted to two months' imprisonment.	..do	Upon the testimony of the good people who petitioned and pity for his mother.
Bishop A. A. Kimball	Utah	Sept. term	Adultery.—8 months' imprisonment.	..do	Upon the recommendation of the judge and the marshal and because of his impaired health.
Sylvanus Smith	Pennsylvania, western	Mar. term, 1888	Passing counterfeit coin.—18 months' imprisonment and $10 fine.	Dec. 27	Upon the recommendation of the district attorney, his former good character, etc.
James Wigg	South Carolina	Oct. term, 1888	Violation of the internal-revenue laws.—6 months' imprisonment and $100 fine.	..do	Upon the recommendation of the judge and district attorney, who doubt his guilt.

Names.	Districts.	When convicted.	Offenses and sentences.	When pardoned.	Reasons for the exercise of executive clemency.
				1888.	
John H. Hess	Utah	Sept. term, 1886	Unlawful cohabitation.—Now under bonds for trial.	Dec. 27	Upon the recommendation of court officials and others, etc.
Judson E. Houghton	Michigan, eastern		Desertion from the Army	do	
John Irvin	Wyoming	Feb. term, 1879	Mail robbery.—Imprisonment for life.	Dec. 28	Commuted to ten years' actual imprisonment upon the recommendation of the judge and citizens of Wyoming, etc.
A. G. Green	Utah	Oct. term, 1887	Unlawful cohabitation and adultery.—6 months' imprisonment on first offense and 3 years on second offense.	do	Upon the recommendation of the district attorney, that he ought not serve the second sentence.
Josiah Richardson	do	do	do	do	Do.
Joseph H. Byington	do	do	do	do	Do.
William Sevins	do	do	do	do	Do.
Sidney Weeks	do	do	Adultery.—3 years' imprisonment.	do	Commuted to six months' imprisonment, upon recommendation of the district attorney.
				1889.	
Lewis Burrow	Arkansas, western		Murder.—To be hanged January 25, 1889.	Jan. 7	Commuted to ten years' imprisonment, in consideration of all the circumstances and the long confinement already suffered, etc.
William G. Sorter	do	Aug. term, 1888	do	do	Commuted to imprisonment for life, upon recommendation of district attorney, Attorney-General, and the jury.
William R. Jackson	Georgia, southern	Oct. term, 1886	Violation of postal laws.—6 years' imprisonment and $500 fine and costs.	Jan. 18	Upon the recommendation of the judge and district attorney and for the sake of convict's mother.
Henry A. Norman	New York, southern	Oct. term, 1888	Smuggling.—1 year's imprisonment and $1 fine.	do	Commuted to four months' actual imprisonment because of frank confession of guilt, previous good character, and distress of his wife.
George E. Powell	Alabama, middle	Dec. term, 1888	Violation of the internal-revenue laws.—90 days' imprisonment.	do	Upon the recommendation of the district attorney and health of the convict.
William G. Wigginton	Alabama, northern	May term, 1888	Illicit distilling.—2 years' imprisonment.	do	Upon the recommendation of the district attorney and the destitute condition of convict's family.
Thomas F. Pendegrast	California, southern	Feb. term, 1888	Receiving stolen property.—2 years' imprisonment and $500 fine.	do	Upon the recommendation of judge and district attorney and the impaired mental and physical condition of convict.
Samuel K. Gay	Pennsylvania, western	Sept. term, 1886	Forgery.—5 years' imprisonment	do	Commuted to three years' imprisonment, with good time allowed, because of previous good character, etc.
Taylor Loftis	Tennessee, western	Apr. term, 1888	Obstructing United States officer—Assault with intent to kill.—2 years' imprisonment and $1,000 fine.	do	Commuted to one year's imprisonment, with good time allowed, because of circumstances of convict's family, etc.
Harrison Loftis	do	do	do	do	Do.

Patrick Coughlin	Texas		Assault with intent to kill.—15 years' imprisonment.	Jan. 18	
Robert M. Douglass	Arizona		Horse stealing.—20 years' imprisonment.	..do	
Role Bolin	Alabama, southern		Illicit distilling.—90 days' imprisonment.	Jan. 21	Upon the grounds of humanity, sickness of family, etc.
Cyrie P. Benedict	District of Columbia	Mar. term, 1888	Embezzlement.—3 years and 6 months' imprisonment.	..do	Because of one year's service of time, previous good character, etc.
James D. Fish	New York, southern	Apr. term, 1885	Violation national banking laws.—10 years' imprisonment on first count.	Jan. 26	Commuted to 5 years and 6 months' imprisonment, with good time allowed, because of old age, previous good character, the great respectability of petitioners, etc.
Anthony Owens	Tennessee, western	Nov. term, 1888	Counterfeiting.—Sentence suspended.	Feb. 16	Upon the recommendation of the trial judge.
F. W. Rose	Kentucky	....do	Violation of the internal revenue laws.—40 days' imprisonment and $100 fine.	..do	Upon the recommendation of the district attorney, and poverty of convict and condition of family.
Robert W. Curley	Texas, western	Aug. term, 1887	Violation of the postal laws.—18 months' imprisonment.	..do	Because of having served his full time, citizenship restored.
John H. DeSilver, alias A. L. De Shaser.	Missouri, western	Sept. term, 1888	Passing counterfeit coin.—9 months' imprisonment.	..do	Upon the recommendation of judge and district attorney.
Z. C. Barnes	California, northern	Mar. term, 1888	Violation of postal laws.—2 years' imprisonment.	Feb. 18	Because he has served one-half of his sentence, is sincerely penitent, previous good character, and condition of his family, etc.
Seaborn Young	Kentucky	Jan. term, 1889	Violation of the internal-revenue laws.—60 days' imprisonment and $100 fine.	..do	Upon the request of the district attorney, and information that convict's wife is dying.
Jose Bento de Deas	Massachusetts	Nov. term, 1864	Murder.—To be hanged; commuted to imprisonment for life.	Feb. 16	Because of his old age, long term of imprisonment, friendless condition, etc., pardoned.
George K. Osborn	Illinois, northern	July term, 1885	Counterfeiting.—10 years' imprisonment.	..do	Upon the recommendation of the judge, late district attorney, present district attorney, *et al.*
John M. T. Ralls	Tennessee, middle	Oct. term, 1888	Violation of pension laws.—2 years' imprisonment, $100 fine and costs.	..do	Commuted to fine of $500 and costs because of destitute condition of family.
Robert Adams	Illinois, northern	Jan. term, 1887	Violation of postal laws.—5 years' imprisonment.	...do	Upon the recommendation of the judge and district attorney.
Albert Smith	Texas, western	Oct. term, 1881	Robbing post-office by force and arms.—99 years' imprisonment.	...do	Upon the recommendation of the officials cognizant of the facts, etc.
James H. Thurber	Utah	Dec. term, 1886	Polygamy and unlawful cohabitation.—4 years for first offense, and 6 months' imprisonment for the second offense, and $700 fine.	...do	Has served more than 3 years, behaved well in prison, previous good character, family needs, and recommended by district attorney.
George M. Bain, jr.	Virginia	Nov. term, 1887	Violation of the national banking law.—5 years' imprisonment.	...do	Upon the recommendation of the judge, district attorney, and Attorney-General, of mercy.
James R. Dublin	Texas, western	Aug. term, 1880	Mail robbery—10 years' imprisonment. Released December 13, 1886.	...do	Served his sentence, good behavior since discharge, his testimony required in an important suit; restoration to citizenship.
Levi Valentine	Arkansas, western	Nov. term, 1887	Violation of the internal-revenue laws.—Sentence suspended.	...do	Granted upon condition of payment of costs before taking effect.

Names.	Districts.	When convicted.	Offenses and sentences.	When pardoned.	Reasons for the exercise of executive clemency.
				1889.	
Thomas Valentine	Arkansas, western	Nov. term, 1887	Violation of the internal-revenue laws.—12 months' imprisonment and $1,100 fine and costs.	Feb. 16	Expiration of sentence and upon payment of costs.
James Valentine	do	do	do	do	Do.
George Allbright	Alabama, northern	May term, 1888	Violation of the internal-revenue laws.—15 months' imprisonment.	Feb. 21	Upon the recommendation of the judge, and the punishment already suffered, etc.
Daniel Carrigan	District of Columbia		Violating sections 5418 and 5438, R. S.—6 years' imprisonment at labor.	Feb. 25	Because of the time kept in jail after conviction and good conduct, sentence commuted to expire June 6, 1889, and continued good time.
Kis-ku-da, alias Socata, (an Indian).	New Mexico	Oct. term, 1888	Murder.—To be hanged Nov. 9, 1888, but respited for investigation.	do	Commuted to life imprisonment upon the recommendation of the judge and district attorney.
Henry Jones	Georgia, southern	July term, 1887	Violation of postal laws.—5 years' imprisonment.	do	Upon the recommendation of the district attorney and many good citizens, etc.
Albert Green	District of Columbia	Nov. term, 1888	Murder.—To be hanged Apr. 5, 1889.	Mar. 21	Commuted to imprisonment for life.
Frederick F. Bickell	Minnesota	June term, 1888	Abstracting funds from a national bank —5 years' imprisonment.	Mar. 23	Upon recommendation of the Attorney-General.
John R. Brown	Washington	Sept. term, 1888	Violation of section 2139, Revised Statutes.—1 year's imprisonment at hard labor, $1 fine, and costs.	do	Do.
William Woods	Arkansas, western	Nov. term, 1888	Murder.—To be hanged April 19, 1889.	Apr. 9	
W. O. Harper	Tennessee, middle	July term, 1888	Conspiracy and violation of internal-revenue laws.—2 years' imprisonment.	Apr. 8	Commuted to one years' imprisonment upon recommendation of the Attorney-General.
Wood Harper	do	do	do	do	Do.
Daniel Wiley	do	do	do	do	Do.
John W. Thomasson	Kentucky	Feb. term, 1889	Violation of the internal-revenue laws.—60 days in jail and $100 fine.	do	Commuted sentence to term of imprisonment upon the recommendation of the Attorney-General.
Steve Bussell	Arkansas, western	Aug. term, 1888	Murder.—To be hanged April 19, 1889.	Apr. 11	Commuted to imprisonment for life.
John Smith	California, southern	Jan. term, 1888	Violation of the internal-revenue laws.—2 years' imprisonment and $300 fine.	May 13	
J. W. Flanagan	Kentucky	Feb. term, 1889	Violation of the internal-revenue laws.—6 months' imprisonment.	Apr. 16	Commuted to three months' imprisonment; Attorney-General recommends pardon.
Charles A. Warner	Maryland		Unlawfully dealing in oleomargarine.—$500 fine.	Apr. 23	
Dr. Warren E. Day	Arizona	Feb. term, 1889	Polygamy.—7 years' imprisonment.	June 28	Commuted to six months' imprisonment upon recommendation of the Attorney-General and his record as a soldier, etc.
Grace Smallwood	District of Columbia	June term, 1889	Murder.—To be hanged October 11, 1889.	May 8	Commuted to ten years' imprisonment.

William O. Johnson	Texas, western	Feb. term, 1889	Violation of postal laws.—1 year's imprisonment.	May 13	Commuted to imprisonment in county jail at Austin, Tex.
Peter Kelley	Texas, northern	Apr. term, 1888	Passing counterfeit coin.—3 years' imprisonment at hard labor and $1 fine.	May 14	Commuted to two years' imprisonment.
Simeon Coy	Indiana	Jan. term, 1888	Violation of the election laws.—18 months' imprisonment and $100 fine and costs.	May 22	Commuted to imprisonment; no property.
James M. Meech	Connecticut	Feb. term, 1885	Embezzling funds of a national bank as cashier.—5 years' imprisonment.	May 24	Commuted to June 10, 1889, when sentence will have been nearly completed.
George Brashears	Arkansas, western	Nov. term, 1888	Murder. To be hanged April 19, 1889.	June 6	Commuted to imprisonment for life, upon the recommendation of the judge, district attorney, and statement of the district attorney that the crime was manslaughter.
Peter O'Neill	New York, southern	Oct. term, 1888	Violation of postal laws, section 3869, Revised Statutes.—1 year's imprisonment and $100 fine.	June 11	Upon the recommendation of the district attorney, and extenuating circumstances and time already served.
Henry Hunt	Virginia, western	Mar. term, 1889	Illicit distilling.—Sentence suspended.	June 18	
Robert P. Mills	Maryland		Maltreating seamen.—1 year's imprisonment and $500 fine.	June 21	Commuted to six months' imprisonment upon the recommendation of the judge and jury.

EXHIBIT Q.—*Statement of United States Marshal Yoes, of the expenses for fees of witnesses before the United States courts for the western district of Arkansas since July*, 1889.

FORT SMITH, ARK., *October* 25, 1889.

DEAR SIR: In answer to your request contained in letter of 12th instant, asking for a clear statement relative to the expenses incurred since July 1 for fees of witnesses, I have the honor to herewith inclose a tabulated comparative statement, which I have had prepared, of the business of our court for certain periods. There are two statements. The one contains—

(1) The business of the court from July 1, 1888, to October 30, 1888, being the first four months of the last fiscal year.

(2) The business of the court from July 1, 1889, to October 25, 1889, being the first four months of the present fiscal year.

(3) The business of the court from July 1, 1888, to June 30, 1889, being the entire fiscal year, and includes the first four months named above.

The other paper contains a still more condensed statement of the business done during the same periods named in the other and gives other information, which can not well be tabulated.

From these two papers it will be seen that since the beginning of the current fiscal year (not quite four months) nearly 50 per cent. more business was transacted than in the first four months of the last fiscal year and more than three-fifths as much as during the entire previous fiscal year ending June 30, last. It will be seen further that in the more important or heavy business of the court, viz, murder and assault with intent to kill cases, this comparative per cent. is even more marked than in the other work of the court.

During the entire twelve months of the last fiscal year murder cases affecting 33 defendants were tried. Of these, 14 were convicted of murder, 14 were acquitted, and 5 convicted of manslaughter. During the first four months of that year 6 were convicted and 6 acquitted of murder and 2 convicted of manslaughter, and during a corresponding period of the current fiscal year there were 18 murder jury trials, affecting 27 prisoners, 9 of whom were convicted of murder and 9 convicted of manslaughter, which is the highest number of murder trials and the greatest number of convictions in murder cases ever experienced in this court at any one term. The same results are noticeable in cases of assault with intent to kill. All these cases were contested with unusual vigor and in each of them there were more than the usual number of witnesses.

Now as to the causes that led to this state of affairs. I might give you the reason in a very few words by saying "want of funds to try the cases when ready." While that is the principal cause, there is another which contributed its share, viz, the passage of the act of Congress diminishing the territorial jurisdiction of the court. While the effect of diminishing the business of the court by this bill has only set in now, because of the large number of cases of violations of law committed prior to the passage of the act, it did have the effect of postponing important trials because of the anticipation of a large decrease in the business of the court in the future, thereby allowing such cases more time and attention. This accounts for the presence of so many important cases upon the docket at the end of last February term. It was the term then coming on, the May term, at which all the business

to be wound up. Both sides were ready and their witnesses were moned. Then five days before the beginning of the term notice up from the Attorney-General's office that the witness appropria- was exhausted. Steps were taken at once to stop witnesses from ng, but the time was too short in most instances and nearly a sand witnesses came to court only to be discharged upon entering court-house. As stated before, a large percentage of the impor- cases pending were old ones, witnesses coming long distances, y of them entitled to $30 and $40 mileage. The marshal having a few dollars in his hands, these witnesses were not paid until they rned again at this term. The forced continuance of this mass of ness entailed a loss upon the Government of not less than $25,000.

Then the adjourned term began, over 300 criminal cases were on the ket. There were 167 prisoners in jail (the largest number ever in re at any one time) and about 150 defendants on bond.

A large amount of this business might have been continued again the term shortened in that way, but Judge Parker determined to ar the docket, and it has been done. There have been only 50 cases ntinued, and most of these are new ones brought in during the term. ere are now 22 prisoners in jail awaiting trial on indictment. It is ceded that from this time forward this court, owing to its dimin- ed jurisdiction, will not have more than half of its usual amount of siness, and the amount of money required for witnesses will be less an half on account of shorter mileage. In my opinion, less than 0,000 will cover the expense for witnesses for the remainder of the rrent fiscal year to June 30, 1890.

I have had the statements prepared (which took some time) and have ne into detail in this letter in order that you might have all the light ssible in this matter and understand the situation fully. I will add at the greatest economy was practiced in the disbursement of these nds. Not a witness was kept a moment longer than actually neces- ry. In some instances where the witnesses lived close by and the urt unable to try at that time, they were sent home two and three nes during the term and their cases set ahead. Thus the accumulated ork of nine months was disposed of in less than half that time. My sbursements for witnesses since July 1, to date, amounts to $64,113.55. he remainder of the $75,000 is now on hand. Upon examination it ill be found that, while the business done during the last four months 50 per cent. greater than the corresponding period of last fiscal year, ie expense for witnesses was larger at that time.

In giving my estimate of the witness expense in the future I desire accompany it with the proviso if funds to pay the expenses of the urt is furnished promptly; otherwise, the same state of affairs existing t the beginning of this fiscal year will occur again.

I trust I have made myself plain and that the explanation will prove atisfactory, but if there are any points upon which you desire other nd more information I shall take great pleasure in answering it as est I can.

I am, sir, very respectfully,

JACOB YOES,
U. S. Marshal.

No. 1.—*Condensed statement of the business of the United States district court for the western district of Arkansas, held at Fort Smith, Ark.*

1. FOR MONTHS OF JULY, AUGUST, SEPTEMBER, AND OCTOBER, 1888.

Crime or offense.	Convicted.	Acquitted.	Nolle prosequi entered.	Grand total.
Murder	6	6		12
Manslaughter	2			2
Rape		1		1
Attempt to murder		1		1
Assault with intent to kill	8	8	3	19
Burglary	3			3
Arson		1		1
Bigamy	1			1
Larceny	45	11	8	64
Conspiracy	1			1
Introducing spirituous liquors into Indian country	28	1	6	35
Retail liquor-dealer without license	34	1		35
Opening mail-bag			1	1
Stealing mail		1	1	2
Breaking into post-office	1			1
Opening sealed letters	1		1	2
Maiming			1	1
Total	130	31	21	182

2. FOR MONTHS OF JULY, AUGUST, SEPTEMBER, AND OCTOBER, 1889.

Murder	9	7	2	18
Manslaughter	9			9
Assault with intent to kill	12	7	2	21
Larceny	49	18	3	70
Conspiracy	2	1		3
Introducing spirituous liquors into Indian country	78	4	5	87
Retail liquor-dealer without license	52	3	7	62
Breaking into post-office	1			1
Opening sealed letters	1			1
Selling liquor to Indians	2			2
Total	215	40	19	274

3. FOR FISCAL YEAR COMMENCING JULY 1, 1888, AND ENDING JUNE 30, 1889.

Murder	14	14	7	35
Manslaughter	5			5
Rape		1		1
Attempt to murder		1		1
Assault with intent to kill	17	21	3	41
Burglary	3			3
Arson		1		1
Bigamy	2			2
Larceny	90	23	8	121
Conspiracy	1	2		3
Introducing spirituous liquors into Indian country	99	3	24	126
Retail liquor-dealer without license	89	7		96
Opening mail-bag		2	1	3
Stealing mail		1	1	2
Breaking into post-office	2			2
Opening sealed letters	1			1
Maiming			1	1
Total	323	76	45	444

No. 2.—*Additional condensed statement of the business of the United States district court, western district of Arkansas, embracing the entire fiscal year from July* 1, 1888, *to June* 30, 1889, *and from July* 1, 1889, *to October* 25, 1889.

Nature of business.	July 1, 1888, to Oct. 30, 1888.	July 1, 1889, to Oct. 25, 1889.	July 1, 1888, to June 30, 1889.
Criminal cases on docket at beginning of time stated	75	57	75
Criminal cases added during time stated	150	253	406
Criminal cases entirely disposed of during time stated	154	259	424
Criminal cases continued during time stated	71	50	57
Defendants in cases entirely disposed of	182	270	444
Jury trials during time stated	55	99	152
Pleas of guilty	95	151	253
Prisoners sentenced to penitentiary		78	164
Prisoners sentenced to jail		128	187

Number of prisoners in jail July 1, 1888	82
Number of prisoners in jail July 1, 1889	168
Highest number of prisoners in jail at any time prior to July 1, 1889	156
Number of prisoners now in jail not tried	55
Number of prisoners on bond not tried but indicted	28
Number of prisoners in jail not tried but indicted	22
Number of murder cases tried since July 1, 1889	17
Number of murder cases pending October 25	6

INDEX.

A.

Page.

..... 2
ngress, suits brought in compliance with..... XVI
Assistant Attorney-General in Department of Justice..... XVII
, appeals in:..... XXII
e, Assistant Attorney-General for Department of..... XVII
its of the laws..... XX
it of the Revised Statutes..... XXIII
nited States attorney in..... XVIII
assistant, compensation of, in Department of Justice..... XIX
assistant, in District of Columbia..... XVIII
regular assistant, list of..... 185
special assistant, list of..... 186

B.

it..... 4
it..... 6
ione case..... XV
ct, claims under..... V
rison..... XII

C.

..... 8
k, Department of Justice..... XIX
ainst District of Columbia..... V
ainst United States..... IV
wman act, under..... V
urt of, business of..... IV
urt of, circuit and district courts to have concurrent jurisdiction with. VI
: money due from the Government..... XIX
ench spoliation..... IV, V
District of, claims against..... V
District of, jail in..... XII
ners of circuit courts..... XXI
tion of assistant attorneys, Department of Justice..... XIX
tion of examiner of claims, Department of State..... XIX
t jurisdiction with Court of Claims, circuit and district courts to VI
se, District of Columbia, repairs to..... XXIV
Claims, business of..... IV
cuit, Territorial, jurisdiction of..... XX
reme, business of..... III
ited States, interpreters in..... XVIII
ited States, records of..... XIII
ritorial, in the Indian Territory..... XXII
ainst the Government, Federal, jurisdiction of..... XXI

D.

..... 14
f murder..... XX
nt of Agriculture, Assistant Attorney-General for..... XVII

Page.
Department of Justice, additional Assistant Attorney-General in XVII
Department of Justice, compensation of assistant attorneys in XIX
Department of Justice library XV
District of Columbia, claims against V
District of Columbia, jail in XIII
District of Columbia Reform School, report of trustees 218

E.

Election law XXII
Examiner of claims, Department of State XIX
Exhibits, list of VII
Exhibit A 2
Exhibit B 1 4
Exhibit B 2 6
Exhibit C 8
Exhibit D 14
Exhibit E 17
Exhibit F 1 30
Exhibit F 2 32
Exhibit F 3 34
Exhibit F 4 36
Exhibit F 5 78
Exhibit F 6 112
Exhibit F 7 113
Exhibit F 8 127
Exhibit F 9 133
Exhibit F 10 139
Exhibit F 11 144
Exhibit F 12 183
Exhibit G 184
Exhibit H 185
Exhibit I 189
Exhibit K 208
Exhibit L 212
Exhibit M 218
Exhibit N 244
Exhibit O 250
Exhibit P 251
Exhibit Q 260

F.

F 1, exhibit 30
F 2, exhibit 32
F 3, exhibit 34
F 4, exhibit 36
F 5, exhibit 78
F 6, exhibit 112
F 7, exhibit 113
F 8, exhibit 127
F 9, exhibit 133
F 10, exhibit 139
F 11, exhibit 144
F 12, exhibit 183
Federal jurisdiction of crimes against the Government XXI
French spoliation claims V

G.

G, exhibit 184
Government penitentiary and reformatory X

H.

H, exhibit 185

I.

I, exhibit 189
Indian Territory, Territorial court in the XXII

J.

Page.
t of Columbia xiii
t of Columbia, report of warden 244
eorganization of the xviii
artment of, compensation of assistant attorneys in xix

K.

..... 208

L.

..... 212
on xxii
..... xiv
dment of the xx
eport of 216

M.

..... 218
arch receivership xvi
grees of xx

N.

..... 244
y case xiii

O.

..... 250

P.

..... 251
port of clerk of 251
y and reformatory, Government xi
es, United States prisoners confined in 212
ts, suit as to xvi
au xii
United States xi
United States, institutions where confined 212
United States, penitentiaries confined in 212
United States, statistics xii

Q.

..... 260

R.

United States courts, restoration of xix
y, Government penitentiary and x
ool, District of Columbia, report of trustees 218
ion of the judiciary xviii
rchitect of the Capitol as to court-house, District of Columbia .. 250
ourt-house, District of Columbia xxiv
brarian, Department of Justice 195
ardon clerk 251
olicitor of the Treasury ..... xx, 189
rustees of Reform School, District of Columbia 216
arden of jail, District of Columbia 244
tutes, amendments of the xxiii

S.

the Treasury, report of ..... xx, 189
laims, French v
risoners xii

Page.
Suits in compliance with acts of Congress XVI
Supervisors of election, statement of fees paid 184
Supreme Court, business of III

T.

Telephone, Bell, case XV
Territorial jurisdiction of circuit court of the United States XX
Terry-Neagle case XIII

U.

United States, changes in judicial system of XXIII
United States, claims against IV
United States penitentiary and reformatory XI
United States prisoners XI
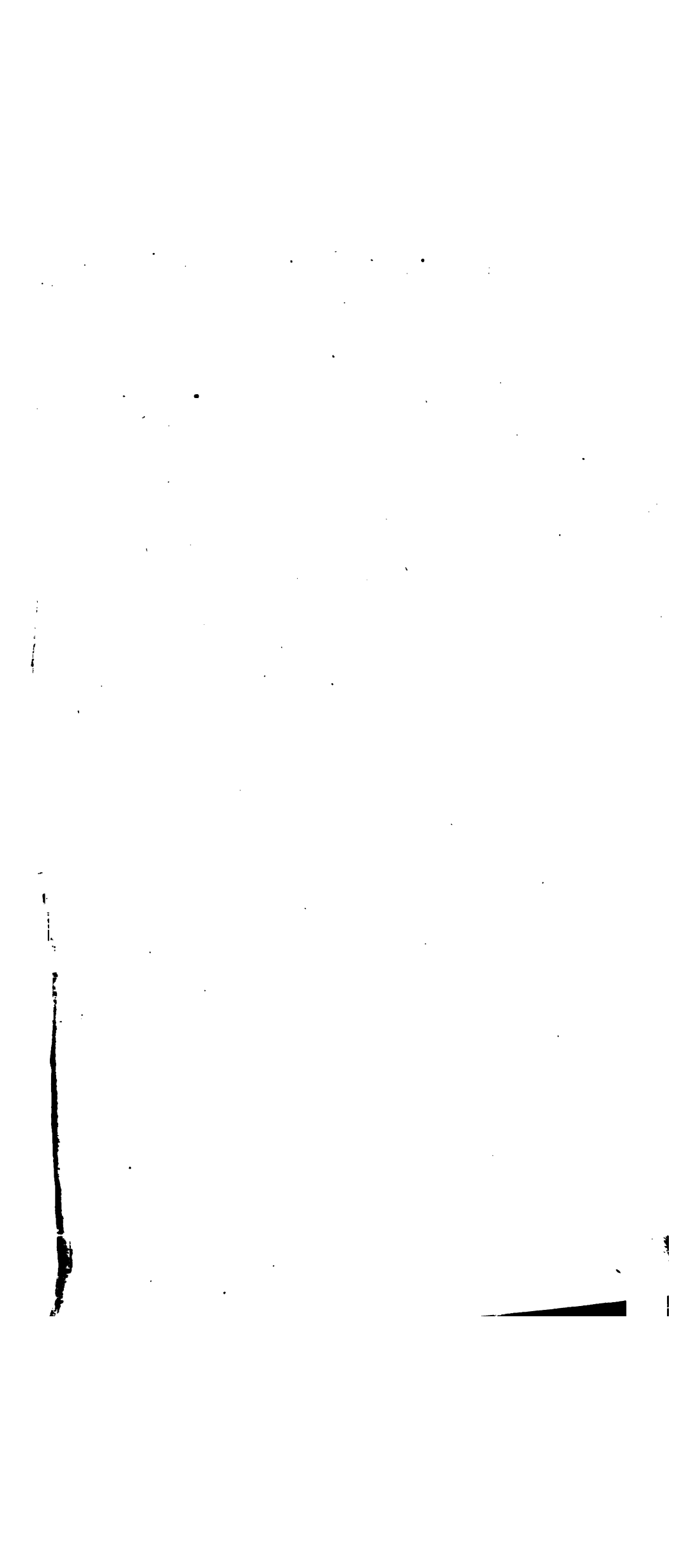
O